Installation and maintenance instructions for contractors

Floor standing gas condensing boiler

6 720 618 585-00.1RS

Logano plus GB402

Read carefully prior to installation and maintenance.

6 720 804 428 (2012/09) GB

Buderus

spares & parts online IBASIS.CO.UK

Table of contents

1 Key to symbols and safety instructions 4
1.1 Explanation of symbols 4
1.2 Safety regulations 4

2 About the appliance 5
2.1 EU Declaration of Conformity 5
2.2 Determined use 5
2.3 About these instructions 5
2.4 Tools, materials and equipment 5
2.5 Product description 6
2.6 Scope of supply 7
2.7 Dimensions and specification 8
2.7.1 Logano plus GB402 dimensions 8
2.7.2 Technical data 9

3 Regulations 11
3.1 Standards, regulations and directives 11
3.2 Notes on installation and operation 11
3.3 Duty to obtain a permit and provide notification 11
3.4 Heating water quality 11
3.5 Combustion air connection/flue connection 11
3.6 Combustion air quality 11
3.7 Disposal 11

4 Transporting the boiler 11
4.1 Transporting the boiler by crane/hoist 11
4.1.1 Lifting the boiler off the pallet 12
4.2 Transporting the boiler on rollers 12

5 Installing the boiler 12
5.1 Installation requirements 12
5.2 Recommended wall clearances 13
5.3 Heating boiler align 13

6 Fitting 13
6.1 Making the flue gas connection 13
6.2 Installing the condensate hose 14
6.3 Fitting the boiler cover 15
6.4 Connecting the air supply (for balanced flue operation) 15
6.5 Making the heating circuit connection 16
6.5.1 Connecting the flow 16
6.5.2 Installing the safety assembly (on site) 16
6.5.3 Connecting the return 17
6.5.4 Installing a DHW cylinder 18
6.6 Filling the heating system and checking for leaks 18
6.7 Making the electrical connection 18
6.7.1 Installing the control unit 19
6.7.2 Making the power supply connection 19
6.8 Providing the fuel supply 20

7 Commissioning 21
7.1 Checking the operating pressure 21
7.2 Checking for leaks 21
7.3 Recording gas parameters 22
7.4 Check the system equipment level 22
7.5 Purging the gas line 23
7.6 Checking the ventilation and extract air apertures and the flue connection 23
7.7 Preparing the heating system for operation 23
7.8 Commissioning the control unit and burner 23
7.8.1 Switching on the boiler at the BC10 23
7.8.2 Carrying out a flue gas test 23
7.8.3 Accessing the service level on the RC35 and displaying monitoring data 24
7.9 Testing the gas supply pressure 24
7.10 Checking and adjusting the gas:air ratio 25
7.10.1 Setting and checking the CO2 values under full load (70-80 %) 25
7.10.2 Setting and checking the CO2 values under partial load 25
7.10.3 Checking the CO2 setting under full load (70-80 %) . . 25
7.11 Switching the status display on the BC 10 to show the boiler temperature status 26
7.12 Returning to operating mode from the flue gas test . . . 26
7.13 Recording actual values 26
7.13.1 Feed pressure 26
7.13.2 CO value 26
7.14 Function tests 27
7.14.1 Checking the ionisation current (flame current) 27
7.15 Checking for leaks during operation 27
7.16 Fitting sections of the casing 27
7.17 Informing the owner/operator and handing over technical documentation 27
7.18 Commissioning report 28

8 Shutting down the heating system 29
8.1 Shutting down the heating system via the control unit . 29
8.2 Shutting down the heating system emergency shutdown 29

9 Inspection and maintenance 29
9.1 Preparing the boiler for inspection 29
9.2 General work 29
9.3 Internal leak test 30
9.3.1 Determining the test volume 30
9.3.2 Carrying out a leak test 31
9.4 Checking the heating system operating pressure 32
9.5 Measuring carbon dioxide content 32
9.6 Cleaning the burner and heat exchanger 32
9.6.1 Burner Removing and cleaning 33
9.6.2 Cleaning the heat exchanger 34
9.7 Inspection of Burner electrodes 36

9.8 Replacing components 36
9.8.1 Removing the gas valve 36
9.8.2 Changing the gas filter 37
9.8.3 Removing the fan 37
9.9 Refitting detached parts 38
9.9.1 Fitting the fan 38
9.9.2 Fitting the ventilation air collector and the gas valve .. 38
9.9.3 Fitting the burner 38
9.9.4 Fitting the gas line to the gas valve 38
9.9.5 Fitting the ventilation air unit 38
9.10 Checking for leaks during operation 39
9.11 Checking the ionisation current 39
9.12 Completing inspection and maintenance 39
9.12.1 Removing meters 39
9.12.2 Fitting sections of the casing 39
9.12.3 Confirming inspection and maintenance 39
9.13 Replacing the gaskets subject to time in use 39
9.14 Inspection and maintenance reports 40

10 Troubleshooting 43
10.1 Recognising the operating state and resetting faults .. 43
10.2 Operating and fault displays 44
10.2.1 Operating messages 44
10.2.2 Fault displays 45

11 Appendix 52
11.1 Sensor curves 52
11.2 Hydraulic resistance 53
11.3 MC10 connection diagram 53
11.4 SAFe connection diagram 56

Keyword index 57

1 Key to symbols and safety instructions

1.1 Explanation of symbols

Warnings

Warnings in this document are framed and identified by a warning triangle printed against a grey background.

Keywords at the start of a warning indicate the type and severity of the ensuing risk if measures to prevent the risk are not taken.

- **NOTICE** indicates that material losses may occur.
- **CAUTION** indicates possible minor to medium personal injury.
- **WARNING** indicates possible severe injury.
- **DANGER** indicates that severe personal injury may occur.

Important information

Important information where there is no risk to people or property is indicated with the adjacent symbol. It is bordered by lines above and below the text.

Additional symbols

Symbol	Explanation
▶	Action step
→	Cross-reference to other parts of this document or to other documents
•	List/list entry
–	List/list entry (second level)

Tab. 1

1.2 Safety regulations

If you smell gas

- ▶ Isolate the gas supply at the gas service valve.
- ▶ Open windows and doors.
- ▶ Never operate electrical switches, including telephones, plugs or doorbells.
- ▶ Extinguish all naked flames. Do not smoke! Never use any lighters or sources of ignition of any kind.
- ▶ Warn all occupants of the building, but do not ring doorbells.
- ▶ If you can actually hear gas escaping, leave the building immediately. Prevent third parties from entering and notify police and fire brigade **from outside** the building.
- ▶ **From outside the building**, call your gas supplier and licensed contractor.

If you smell exhaust gas

- ▶ Switch off the boiler (→ page 29).
- ▶ Open windows and doors.
- ▶ Notify an authorised contractor.

Danger of poisoning. Insufficient ventilation can lead to dangerous flue gas leaks.

- ▶ Never block ventilation and extract air apertures or reduce their size.
- ▶ The boiler must not be operated, unless you immediately remedy the fault.
- ▶ Inform the system user in writing of the problem and associated risk.

Danger of escaping products of combustion

- ▶ Ensure that the exhaust pipes and seals are not damaged.
- ▶ Ensure that the boiler is not equipped with a ventilation air damper or a thermostatic shut-off damper downstream of the flue connection.

Danger of explosion of flammable gases

- ▶ Any work on components that carry gas may only be carried out by a licensed contractor.

Danger posed by explosive and easily flammable materials

- ▶ Never use or store easily flammable materials (paper, curtains, clothing, thinners, paints, etc.) in the vicinity of the boiler.

Danger through electric shock when the boiler is open

- ▶ Before opening up the boiler, isolate it completely from the mains power supply and secure against unintentional re-connection.
- ▶ It is not enough to only switch off the control unit.

Danger through short circuits

To prevent short circuits:

- ▶ Only use original Buderus cables where supplied.

Siting and adjustment

- ▶ Correct and proper installation and adjustment of the burner and the control unit are the fundamental requirements for safe and economical operation of the boiler.
- ▶ Only permit an authorised contractor to install the boiler.
- ▶ Never change any parts in contact with exhaust gas.
- ▶ Work on components in contact with gas must only be carried out by certified gas fitters.
- ▶ Electrical work must only be carried out by qualified electricians.
- ▶ Never operate the boiler in rooms that are permanently occupied.
- ▶ Do not cover or reduce the size of ventilation apertures in doors, windows and walls. If draught-proof windows are fitted, ensure there is an adequate supply of combustion air.

▶ **Never shut off safety valves!**
Water may escape from the safety valve for the hot water system and piping when the water is being heated.

Risk of damage due to operator error

Operator errors can result in injury and damage to property.

▶ Ensure that children never operate this appliance unsupervised or play with it.
▶ Ensure that only personnel who can operate this appliance correctly have access to it.

Instructing the customer

▶ Explain to the customer how the boiler works and how to operate it.
▶ Inform customers that they must not carry out any modifications or repairs.
▶ Maintenance and repairs may only be carried out by an authorised contractor.
▶ Use original spare parts only!
▶ Any other combinations, accessories and wearing parts may only be used if these are specifically designed for the application and impair neither the performance characteristics nor the safety requirements.

2 About the appliance

2.1 EU Declaration of Conformity

The design and operation of this product conforms to the European Directives and the supplementary national requirements. Its conformity is demonstrated by the CE designation. You can call up the Declaration of Conformity for this product on the internet at www.buderus.de/konfo or request a copy from your local Buderus sales office.

2.2 Determined use

The Logano plus GB402 is designed for conventional use as a gas condensing boiler for DHW and central heating.

Only gas supplied by the public gas supplier can be used.

Observe the details on the data plate and the specification (→ Chapter 2.7, page 8) to ensure correct use.

2.3 About these instructions

These installation and maintenance instructions contain important information for the safe and appropriate installation, commissioning and servicing of this gas condensing boiler.

These installation and maintenance instructions as well as the service instructions are designed for contractors who, through their technical training and experience, are knowledgeable in handling heating systems and gas installations.

The following documents are available for the Logano plus GB402:

- Operating instructions
- Operating instructions, MC10 control unit
- Installation and maintenance instructions
- Operator's log
- Technical guide

The above documents are also available for downloading via the Buderus website.

Please contact us with suggestions for improvement or if you notice any errors. For contact addresses and our internet address, see the back cover of this document.

2.4 Tools, materials and equipment

For boiler installation and maintenance you will need the following:

- Standard tools used for central heating, gas and water installation, plus set of a metric open-ended spanners and Allen keys.
- The RC35 programming unit as a monitoring device for commissioning, inspecting and servicing the boiler.

A PC with Buderus Logamatic ECO-Soft4000/EMS and a service key can be used as a monitoring device instead.

The following may also prove useful:

- Cleaning panels and/or chemical cleaning agent for wet cleaning (available as accessories)

2.5 Product description

The Logano plus GB402 is a gas condensing boiler with an aluminium heat exchanger.

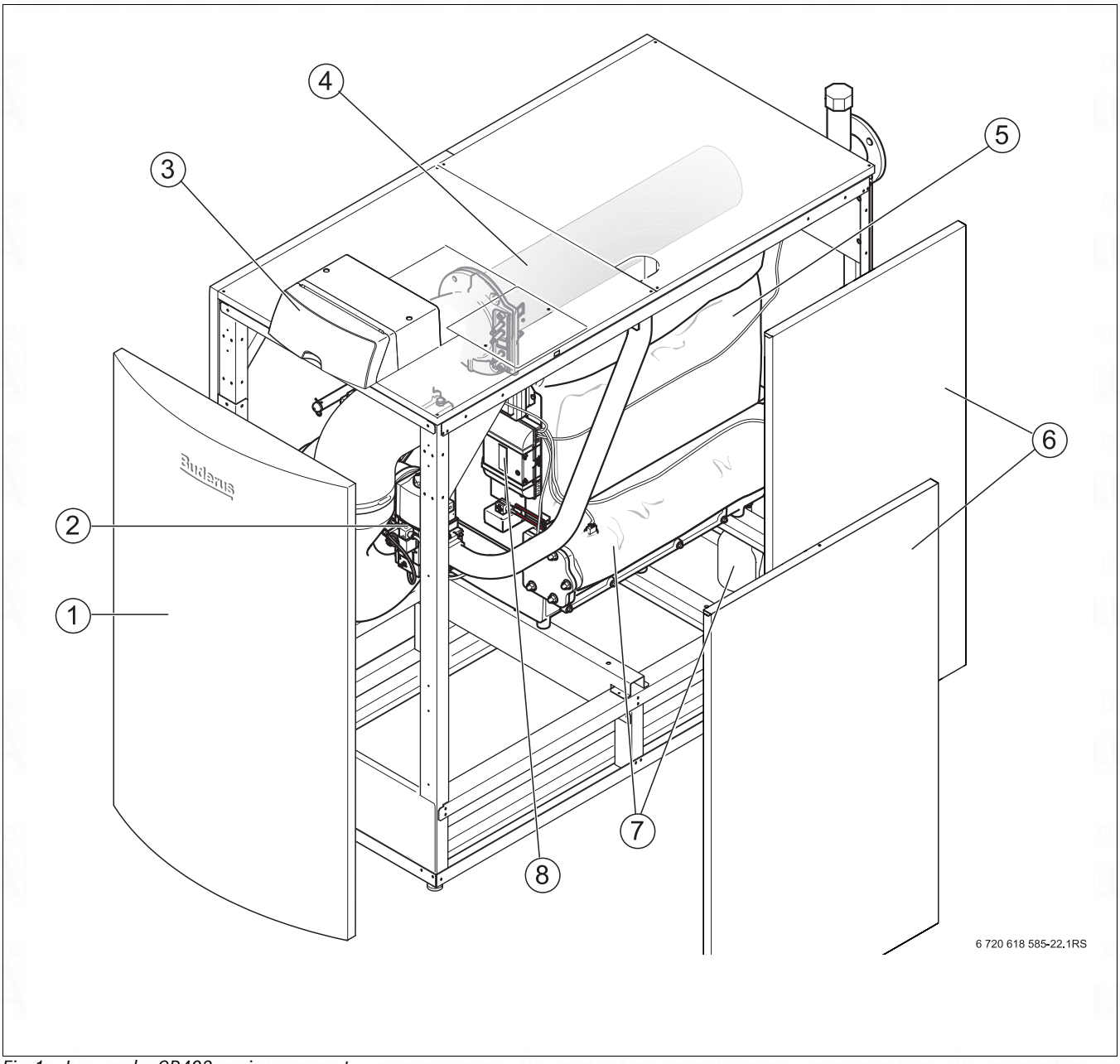

Fig. 1 Logano plus GB402 - main components

[1] Boiler front panel
[2] Gas train
[3] Control unit (MC10 and BC10)
[4] Gas burner (burner rod)
[5] Boiler block with thermal insulation
[6] Boiler casing
[7] Condensate pan and siphon
[8] Burner control unit

The main components of the Logano plus GB402 (→ Fig. 1) are:

- Control Unit
- Appliance frame and casing
- Boiler block with thermal insulation
- Gas burner

The control unit monitors and controls all electrical boiler components.

The boiler block transfers the heat generated by the burner to the heating water. The thermal insulation reduces the radiation and standby losses.

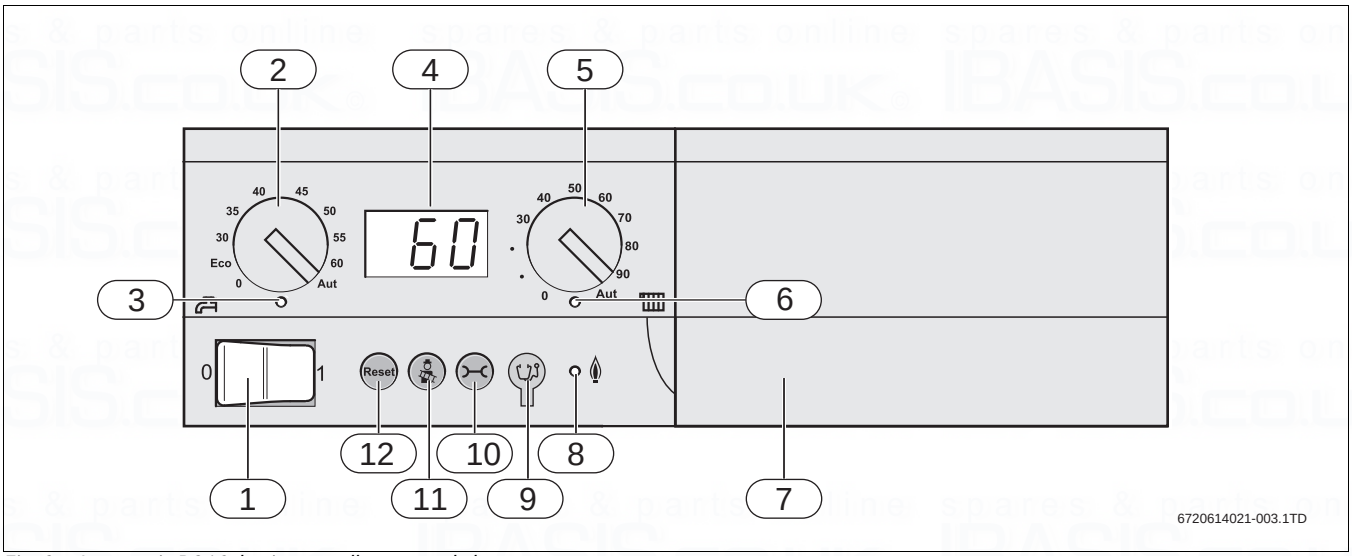

Fig. 2 Logamatic BC10 basic controller - control elements

[1] "ON/OFF" switch
[2] Rotary selector for set DHW temperature
[3] "DHW heating" LED
[4] Status display
[5] Maximum boiler temperature rotary selector
[6] "DHW demand" LED
[7] Base plate with a slot for a programming unit, e.g. RC35 (behind the fascia)
[8] "Burner" (On/Off) LED
[9] Connection socket for diagnostic plug
[10] "Status display" key
[11] "Flue gas test" key
[12] "Reset" key (fault release button)

Logamatic BC10 basic controller (→ Fig. 2).
The Logamatic BC10 basic controller provides control over the standard functions of the heating system. It provides functions including the following:

- Switching the heating system on/off
- Setting the DHW temperature and maximum boiler water temperature in heating mode
- Status display

Figure 2 provides an overview of the control elements of the Logamatic BC10 basic controller.

Programming units (such as the RC35*) offer many additional functions for the convenient control of your heating system.

** available as an optional accessory*

2.6 Scope of supply

The Logano plus GB402 is supplied as standard with a Logamatic BC10 basic controller and the MC10 control unit in 3 separate packages.

▶ Upon receipt, check that all packaging is in perfect condition.
▶ Check the delivery for completeness.
▶ Dispose of packaging in an environmentally responsible manner.

Packing unit	Component	Packaging
1 (boiler)	Assembled boiler (excluding casing)	1 shrink-wrap package on a pallet
	Siphon	1 shrink-wrap package
	Foot bolts	1 shrink-wrap package
	Boiler flue connection	1 box
	Label for gas type conversion	1 shrink-wrap package
	Technical documentation	1 shrink-wrap package
2 (separate)	Casing	1 box
3 (separate)	MC10 control unit (includingBC10)	1 box

Tab. 2 Scope of supply

Accessories

Many individual accessories are available for this boiler.
For details regarding suitable accessories, see the Buderus web site or contact your local Buderus office.

The following accessories are available from your local sales office:

- Safety valve or safety assembly
- Exhaust system
- Programming unit, e.g. RC35
- Ventilation air adaptor (accessory for balanced flue operation)

2.7 Dimensions and specification

2.7.1 Logano plus GB402 dimensions

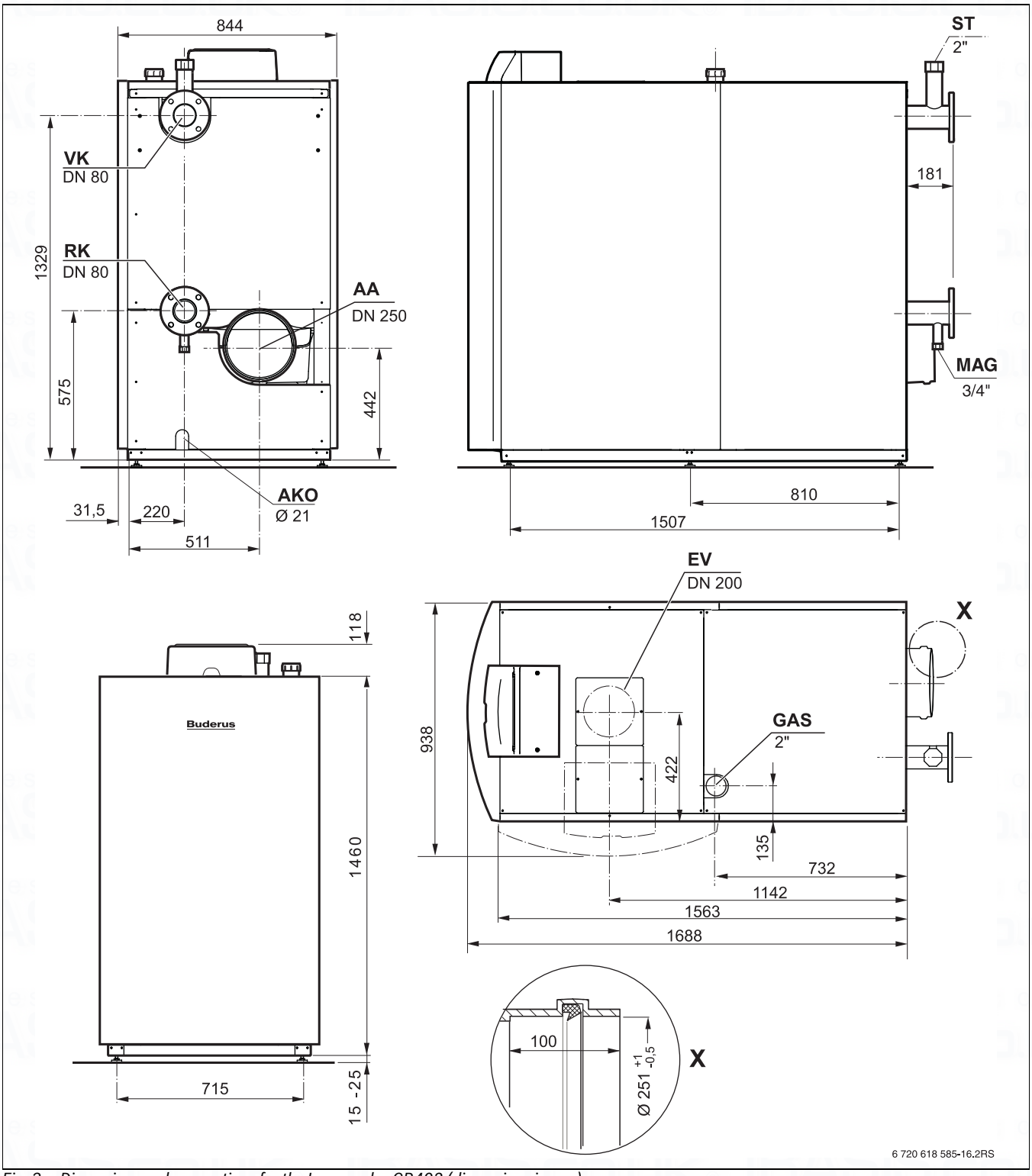

Fig. 3 Dimensions and connections for the Logano plus GB402 (dimensions in mm)

[AA] = Flue gas outlet
[AKO] = Condensate outlet
[EV] = Combustion air pipe inlet (balanced flue operation only)
[GAS] = Gas connection
[MAG] = Optional connection for a diaphragm expansion vessel to protect a single boiler
[RK] = Boiler return
[ST] = Safety valve or safety assembly connection
[VK] = Boiler flow

2.7.2 Technical data

		Unit	Boiler size (output - no. of sections)				
			GB402-320 - 5	GB402-395 - 6	GB402-470 - 7	GB402-545 - 8	GB402-620 - 9
Rated heat input Qn (Hi)		**kW**	61.0 – 304.8	75.2 – 376.2	89.5 – 447.6	103.8 – 519.0	118.0 – 590.0
Rated output at 80/60 °C		**kW**	58.9 – 297.2	72.6 – 367.4	85.2 – 435.8	100.7 – 507.0	114.9 – 578.2
Rated output at 50/30 °C		**kW**	66.7 – 320.0	80.5 – 395.0	95.6 – 468.2	113.0 – 545.0	127.6 – 621.4
Boiler efficiency, maximum output at 80/60 °C		**%**	97.5	97.6	97.3	97.7	98.0
Boiler efficiency, maximum output at 50/30 °C		**%**	105.1	105.0	104.6	105.0	105.3
Seasonal efficiency [to DIN], heating curve 75/60 °C		**%**	106.0	106.3	106.6	106.3	106.4
Seasonal efficiency [to DIN], heating curve 40/30 °C		**%**	109.6	109.4	109.7	109.3	110.4
Standby heat loss at excess temperature 30/50 K		**%**	0.20/0.33	0.16/0.27	0.14/0.23	0.12/0.20	0.11/0.17
Heating water circuit							
Boiler water capacity		**l**	47.3	53.3	59.3	65.3	75.3
Pressure drop on the heating water side at Δt 20 K		**mbar**	99	105	95	108	113
Maximum flow temperature heating/DHW mode		**°C**	30 – 85				
Safety limit/high limit safety cut-out		**°C**	100				
Maximum permissible operating pressure		**bar**	6				
Pipework connections							
Gas connection		**Inches**	2				
Heating water connection		**DN/mm**	80				
Condensate connection		**Inches**	¾ "				
Flue gas values							
Exhaust connection		**mm**	250				
Volume of condensate for natural gas G20, 40/30 °C		**l/h**	30.8	39.2	46.2	55.9	64.7
Flue gas mass flow rate	**Full load**	**g/s**	142.4	174.5	207.1	240.6	271.9
	Partial load	**g/s**	28.7	36.8	40.6	48.0	53.2
Flue gas temperature 50/30 °C	**Full load**	**°C**	45	44	44	43	44
	Partial load	**°C**	30				
Flue gas temperature 80/60 °C	**Full load**	**°C**	65				
	Partial load	**°C**	57	58	58	58	58
CO_2 content, natural gas E/LL	**Full load**	**%**	9.1				
	Partial load	**%**	9.3				
Standard CO emissions factor		**mg/kWh**	20				
Standard NO_x emissions factor		**mg/kWh**	40				
Residual draught, fan (flue gas and combustion air system)		**Pa**	100				
Exhaust system							
Type (according to DVGW regulations)			Open flue operation: B_{23}, B_{23P} Balanced flue operation: C_{13}, C_{33}, C_{43}, C_{53}, C_{63}, C_{83}, C_{93}				

Tab. 3 Technical data

		Unit	Boiler size (output - no. of sections)				
			GB402-320 - 5	GB402-395 - 6	GB402-470 - 7	GB402-545 - 8	GB402-620 - 9
Electrical data							
IP rating		-	IPX0D				
Supply voltage/frequency		V/Hz	230/50				
Power consumption	**Full load**	W	418	449	487	588	734
	Partial load	W	39	45	42	45	49
Protection against electrocution			Safety category 1				
Maximum permissible appliance fuse rating		A	10				
Appliance dimensions and weight							
Handling dimensions width × depth × height		mm	781 x 1740 x 1542				
Weight (excl. casing)		kg	410	438	465	493	520

Tab. 3 Technical data

Boiler size	Natural gas H (G20) Wobbe index 14.9 kWh/m^3 Gas throughput [m^3/h]
320 -5	32.3
395 -6	39.8
470 -7	47.4
545 -8	55.0
620 -9	62.5

Tab. 4 Gas throughput (relative to 15 °C gas temperature and 1013 mbar air pressure)

Country:	Boiler size	Nominal gas pressure [mbar]	Gas category	Gas family, gas group and reference gas set on delivery	Delivered set to the nominal gas pressure [mbar][1)]
DE	320-620	20	I_{2ELL}	2E, G20	20
AT, BY, CH, CZ, DK, EE, ES, GB, IE, IT, LT, LV, PT, RO, RU, SI, SK, TR, UA	320-620	20	I_{2H}	2H, G20	20
FR	320-620	20/25	I_{2Esi} [2)]	2_{Es} [2)], G20	20
BE	320-620	20/25	$I_{2E(R)}$	2_{Es} [2)],G20	20
FR	320-620	20/25	I_{2Esi} [2)]	2_{Ei} [2)], G25[3)]	25
LU	320-620	20	I_{2E}	2_{E}, G20	20
NL	320-620	25	I_{2L}	2_{L}, G25	25
PL	320	20	I_{2E}	2_{E}, G20	20
PL	395-620	20	I_{2ELw}	2_{E}, G20	20
HU	320	25	I_{2H}	2_{H}, G20	25
HU	395-620	25	I_{2HS}	2_{H}, G20	25
DE	320-620	20	I_{2ELL}	2_{LL}, G25[3)]	20

Tab. 5 Country-specific gas categories and supply pressures

1) The gas supplier must guarantee the minimum and maximum pressures (acc. to national regulations for public gas supply).

2) Es and Ei are subareas of gas group E.

3) Gas group LL for Germany and subarea Ei of gas group E for France are supplied with a setting for an upper Wobbe index of 12.8 kWh/m^3 for 0 °C, 1013 mbar. This corresponds to the average standard supply for areas supplied with gas group LL and lies at the upper limit of subarea Ei of gas group E. This should prevent overload settings from being made inadvertently and is designed to facilitate commissioning.

If the boiler is to be replaced in existing systems:

- Consult gas suppliers to ensure that the nominal gas pressure according to Tab. 5 (country-specific gas category and supply pressures) is adhered to.

3 Regulations

3.1 Standards, regulations and directives

During installation and operation of the heating system, observe all country-specific standards and guidelines. Also observe the details on the boiler data plate. Warranty claims for the boilers will only be considered provided the water quality requirements have been met and the operator's log has been maintained

3.2 Notes on installation and operation

When installing and operating the heating system observe the following:

- local building regulations regarding the installation conditions
- local building regulations regarding ventilation and extract air systems and the chimney connection
- regulations regarding connection to the power supply
- technical rules of the gas supplier regarding the connection of the gas burner to the public mains gas supply.
- Regulations and standards regarding the safety equipment level of water-filled heating systems.

3.3 Duty to obtain a permit and provide notification

▶ The local gas supplier must be notified of and approve the gas boiler installation.

▶ Please note that regional approvals may be required for the flue system and the connection of the condensate outlet to the public sewerage system.

▶ Prior to commencing installation, inform the local flue gas inspector [where appropriate] and water authority.

3.4 Heating water quality

As pure water cannot be used for heat transfer, water quality is important. Poor water quality can damage heating systems due to scaling and corrosion.

Prior to filling the heating system, carefully read the enclosed operator's log on water quality. Ignoring the required water quality can result in boiler damage that is excluded from the warranty.

Water quality is an essential factor for increased efficiency, functional reliability, long service life and for maintaining the constant operational condition of a heating system.

▶ Record the values listed in the operator's log to verify the water quality.

3.5 Ventilation requirements

Ventilation for combustion and cooling should be provided in the boiler house in accordance with BS 6644 and IGE/UP/10. In the tables below may be used for guidance.

3.5.1 Open flue boilers

Opening free area sizes given in cm^2 per kW net.

% Load in Summer	Low level	High level
50	4	2
75	5	3
100	6	4

Tab. 6

3.5.2 Room sealed boilers

Opening free area sizes given in cm^2 per kW net.

% Load in Summer	Low level	High level
50	2	2
75	5	5
100	6	6

Tab. 7

▶ Never restrict or block ventilation openings. Keep the ventilation openings clear at all times.

3.6 Combustion air quality

▶ Keep the supply of combustion air free of corrosive substances (e.g. halogenated hydrocarbons that contain chlorine or fluorine compounds).
This will help prevent corrosion.

3.7 Disposal

▶ All heating system components that have to be replaced should be disposed of in an environmentally responsible manner at an authorised disposal site.

4 Transporting the boiler

CAUTION: Risk of injury through carrying heavy loads.

▶ Only transport the boiler by means of a crane/hoist, forklift truck or transport rollers.

DANGER: Risk to life through falling loads!

Falling loads can result in life-threatening injuries.

▶ Only transport the boiler by means of a crane/hoist, forklift truck or transport rollers.

▶ Only trained authorised personnel may undertake the handling (e.g. by forklift truck) or lifting by means of a crane/hoist.

▶ Observe safety instructions relating to the lifting of heavy loads (e.g. by means of a crane/hoist).

▶ Wear personal safety equipment (e.g. safety boots and protective gloves).

▶ Protect the boiler against slippage by means of a transport strap.

NOTICE: Boiler damage through impact!

The standard delivery of the boiler includes components that are susceptible to impact damage.

▶ During handling protect all components against impact.

▶ Observe the transport markings on the packaging.

The boiler may be transported to the place of installation by crane/hoist, forklift truck or pallet truck. Where possible, transport the boiler to the installation location in its shipping packaging to protect it from contamination.

4.1 Transporting the boiler by crane/hoist

NOTICE: Boiler damage through means of transport.
Without the inverted carton, the boiler frame will deform through lifting it by crane/hoist.

▶ When transporting the boiler do not remove the inverted carton with internal wooden crate.

▶ Route the lifting gear (round slings) through the pallet.

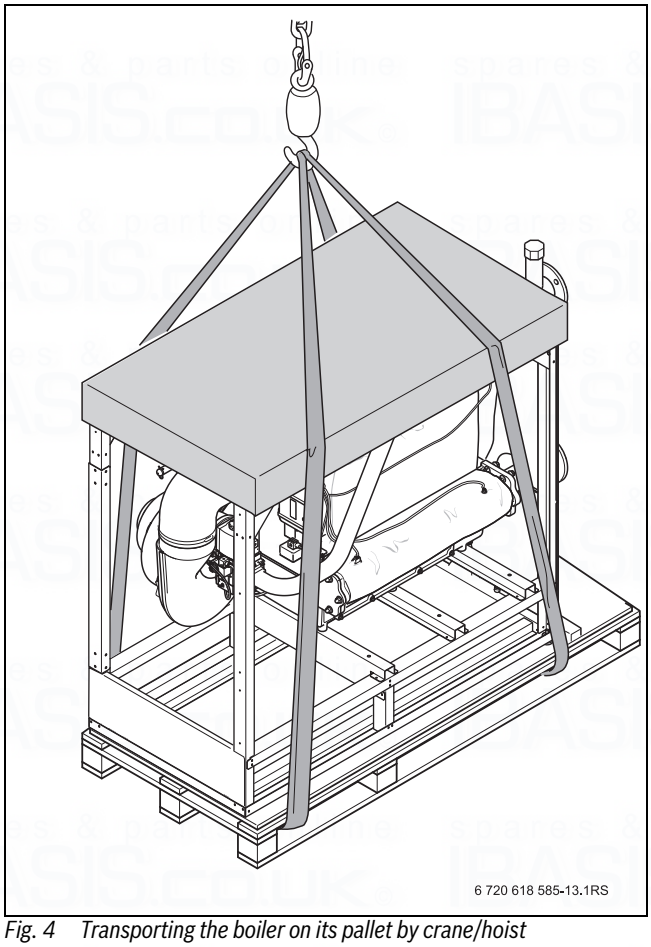

Fig. 4 Transporting the boiler on its pallet by crane/hoist

4.1.1 Lifting the boiler off the pallet

▶ Remove 4 safety screws [1].

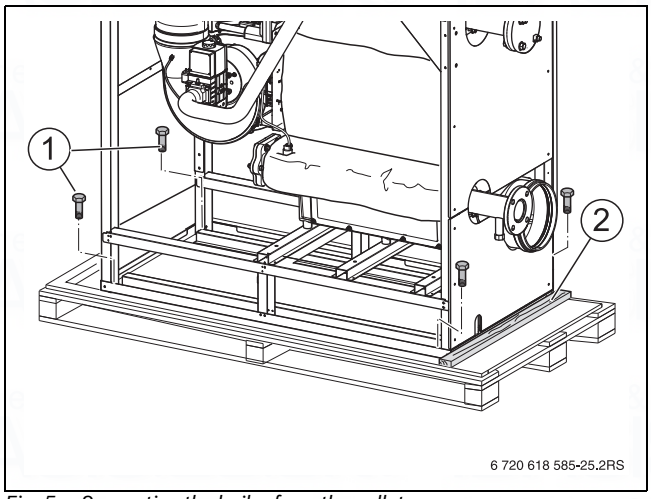

Fig. 5 Separating the boiler from the pallet

[1] Locking screws
[2] Fixing bar

NOTICE: Boiler damage through impact!
The boiler is at risk of tipping over if it is pushed off the side of the pallet.

▶ Push the boiler off the pallet towards the burner or flue gas side. When pushing the boiler from the flue gas side, remove fixing bar [2].

▶ Prevent the boiler from coming down hard.

4.2 Transporting the boiler on rollers

If the path to the installation location is level, the boiler can also be rolled. For this, use at least 5 pipes of approx. 900 mm length (R 1¼ " diameter) as rolling supports.

▶ Position the pipes approx. 400 mm apart on the floor.

▶ Lift the boiler onto the pipe sections and carefully transport it to the installation location.

Commercially available transport rollers can be used.

▶ Ensure even load distribution on the load-bearing parts to prevent distortion of the bottom plate.

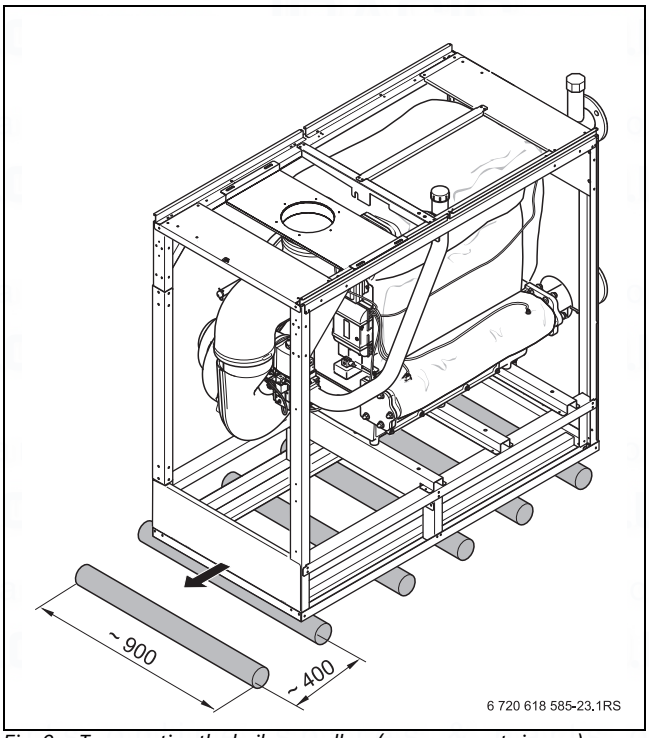

Fig. 6 Transporting the boiler on rollers (measurements in mm)

Protect boiler from contamination if the boiler is not to be taken into use immediately.

Dispose of packaging in an environmentally responsible manner.

5 Installing the boiler

5.1 Installation requirements

NOTICE: System damage due to frost!
- ▶ Site the heating system in a room safe from the risk of frost.

DANGER: Danger posed by explosive and easily flammable materials!
- ▶ Never use or store easily flammable materials (paper, curtains, clothing, thinners, paints, etc.) in the vicinity of the boiler.

NOTICE: Risk of boiler damage through contaminated combustion air.
- ▶ Never use chlorinated cleaning agents or halogenated hydrocarbons (as contained in spray cans, solvents, cleaning agents, paints and adhesives, for example).
- ▶ Never store or use such materials in the boiler room.
- ▶ Avoid very dusty atmospheres (building dust).

NOTICE: Boiler damage through overheating.
Excessive ambient temperatures can result in heating system damage.
- ▶ Ensure ambient temperatures above 0 °C and below 35 °C.

Preventing noise disturbance for end-users

- ▶ Where the boiler surroundings are sensitive to noise (e.g. residential units) the use of flue silencers and flexible pipe work connections may be considered.

5.2 Recommended wall clearances

When determining the installation location, take the clearances for the flue and the connection pipe assembly into consideration (→ Fig. 7 and Chapter 6 flue system connection and the pipework on the water and gas sides, page 13).

Where applicable, allow extra wall clearances for additional components, for example DHW cylinder, pipe connections or other components on the flue gas side etc.

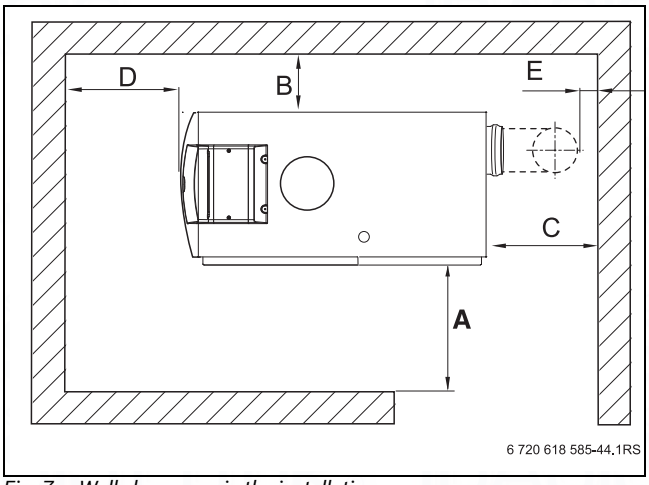

Fig. 7 Wall clearances in the installation room

Dimension	Wall clearance (mm)	
	Minimum	recommended
A	700	1000
B	150	400
C [1)]	-	-
D	700	1000
E[1)]	150	400

Tab. 8 Recommended and minimum wall clearances (dimensions in mm). Maintain minimum clearance, dimension E.

1) This clearance dimension applies independently of the installed flue system.

5.3 Heating boiler align

Level the boiler horizontally to prevent air pockets forming inside the boiler and to enable condensate to drain fully from the condensate pan.

NOTICE: Boiler damage through insufficient load-bearing capacity of the installation area or unsuitable substrate!
- ▶ Ensure that the installation area offers sufficient load-bearing capacity.

- ▶ Bring the boiler into its final position.
- ▶ Level the boiler horizontally by means of its adjustable feet and a spirit level.

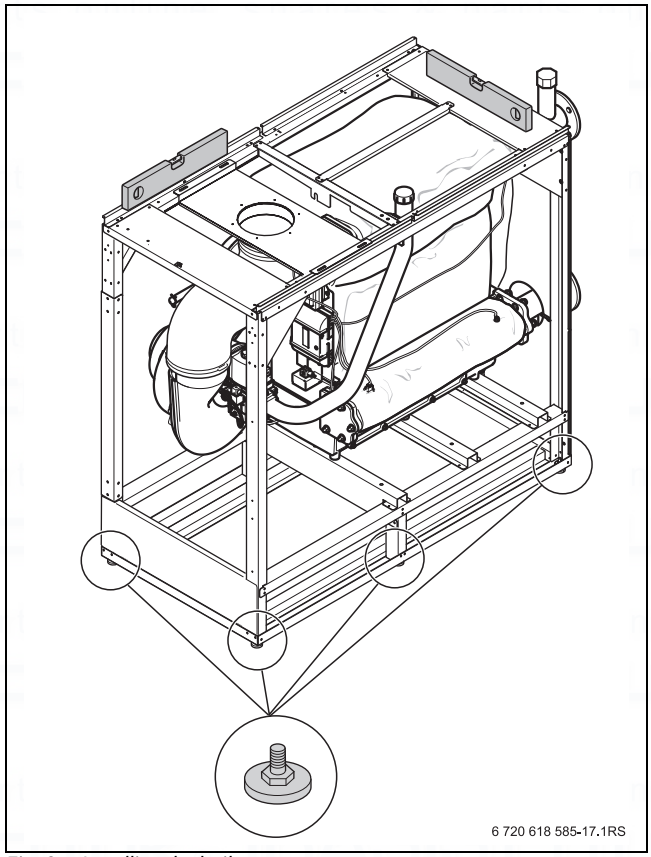

Fig. 8 Levelling the boiler

6 Fitting

6.1 Making the flue gas connection

Observe all country-specific requirements when installing the flue system.

Flue gas routing on multi-boiler systems (cascade).
These instructions only concern single boiler systems. Only ask qualified contractors to calculate and size flue gas / combustion air systems for multi-boiler systems. Ask the manufacturer of the flue system to confirm and verify the calculations. The flue gas system must prevent a return flow of flue gas through boilers that are not in use.

DANGER: Risk to life from escaping flue gas inside the installation room!
▶ The gasket in the flue connection of the condensate pan must be present, in good order and correctly inserted.

Very different requirements apply to flue connection in different countries.

NOTICE: System damage through incorrectly drained condensate.
▶ Drain the condensate generated in the flue via the boiler flue connection directly into the siphon inside the boiler (→ Chapter 6.2, page 14). Boiler flue connection, condensate drain and condensate hose are part of the standard delivery.
▶ Use the boiler flue connection that is part of the standard delivery.

▶ Plug boiler flue connection [2] into flue connection [1].
▶ Fit condensate hose [3] to the condensate drain of the boiler flue connection.
▶ Guide the condensate hose through the opening in the lower back panel.

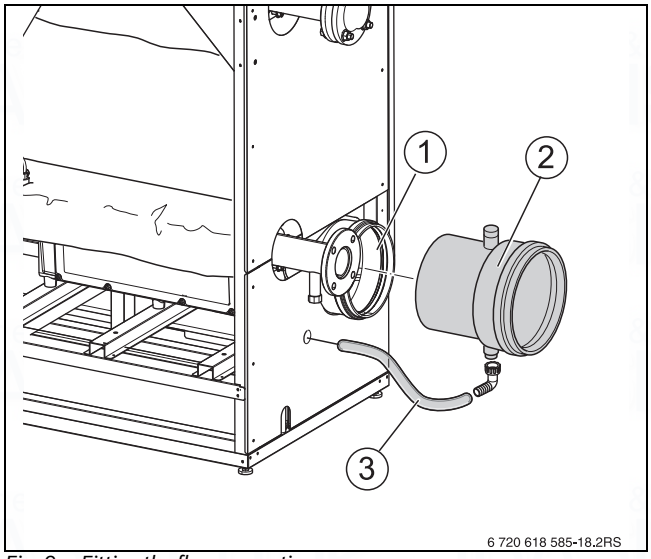

Fig. 9 Fitting the flue connection

[1] Flue gas connection
[2] Boiler flue connection with condensate drain
[3] Condensate hose

▶ Make flue connection.

When installing the flue connection, observe the following:
- Country-specific requirements
- The flue pipe cross-section must comply with all current regulations
- Select the shortest possible route for the flue pipe and install it with a slope towards the boiler.
- Secure the flue at appropriate intervals
- Ensure the connection is made free from stress, and that no loads are transferred to the flue connection.
- **During engineering and installation of the flue, create a layout that best favours the flue gas flow**.

DANGER: Risk to life through toxic exhaust gases escaping.
▶ Check the entire flue system for correctly made and sealed joints.

6.2 Installing the condensate hose

Information regarding the condensate hose.
▶ Carefully drain the condensate created inside the boiler and flue (route the flue with a slope towards the boiler).
▶ Drain the condensate generated in the flue via the boiler flue connection directly into the siphon inside the boiler. Boiler flue connection, condensate drain and hose are part of the standard delivery.
▶ Drain the condensate into the public sewerage system in accordance with the requirements in your country.
▶ Observe regional regulations.

DANGER: Risk to life through poisoning! Open connections or siphons not filled with water can cause a through from escaping flue gas.
▶ Filling the siphon with water.

▶ Remove the cap from the filler hole in the siphon supplied and fill with approx. 2 litres of water.
▶ Fit elbow [4] with inserted gasket onto the filler hole.
▶ Fit the condensate hose from flue system [3] with a hose clip to the elbow.
▶ Fit the siphon to the outlet on condensate pan [2].
▶ Install neutralising systems (accessories) in accordance with the installation instructions.
▶ Connect the condensate hose from the siphon with a slope to the neutralising system.

Where the neutralising system is installed outside the boiler, there is the option of guiding the condensate hose through the aperture in the back panel.

▶ Connect the condensate hose from the boiler flue connection with a slope to the neutralising system.

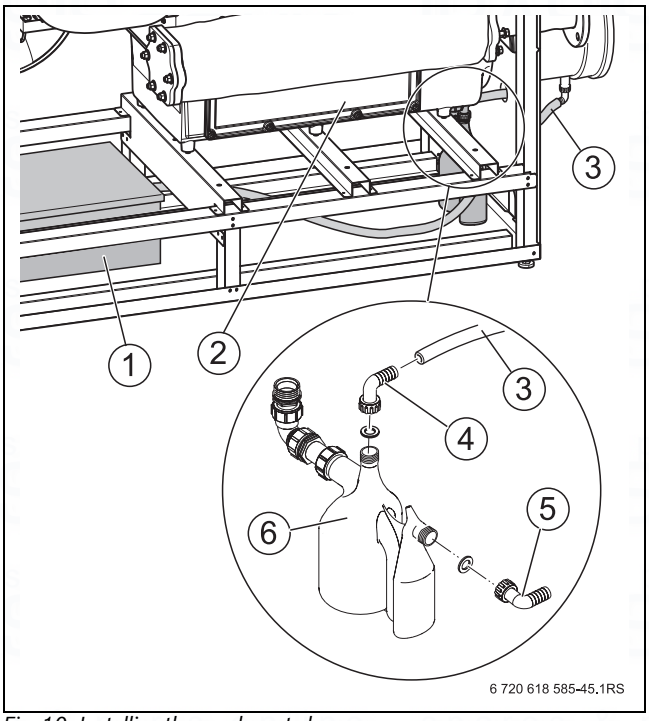

Fig. 10 Installing the condensate hose

[1] Neutralising system (by others)
[2] Condensate pan
[3] Condensate hose connection to the flue gas system
[4] Elbow, filler hole
[5] Siphon outlet to neutralising system or drain line
[6] Siphon

▶ Make the connection to the sewerage system in accordance with the instructions of the neutralising system and locally applicable regulations.

6.3 Fitting the boiler cover

▶ Fit front boiler cover [1] with 4 screws to the frame.
▶ Fit rear boiler cover [2] with 4 screws to the frame.

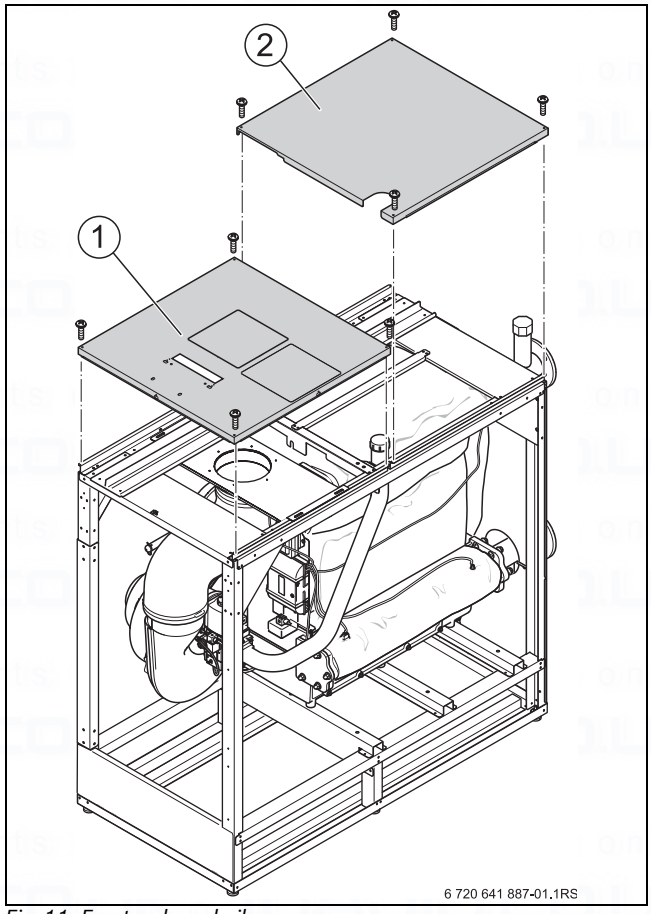

Fig. 11 Front and rear boiler covers

[1] Front boiler cover
[2] Rear boiler cover

6.4 Connecting the air supply (for balanced flue operation)

The combustion air is supplied to the boiler either through an external wall connection, a duct or a separate pipe in the duct.

An adaptor is available as an accessory for balanced flue operation.

We would recommend the installation of a silencer in the ventilation air line, subject to the air inlet aperture arrangement on the outside of the building.

Insulate the ventilation air line to prevent condensate being created in/on that line (inside and outside).

▶ Remove cover panel [1] from the front boiler cover.
▶ Fit adaptor [2] (accessory) on the cross-brace and seal with sealant (accessory).
▶ Insert and seal in a ventilation air bend in the adaptor.
▶ **In cascade arrangements, ensure that each boiler is equipped with a separate ventilation air line.**

- ▶ Create the ventilation air line up to the ventilation air bend using a standard air supply system in accordance with the requirements of the country concerned.
- ▶ Insulate the ventilation air line to prevent condensate forming (inside and outside).

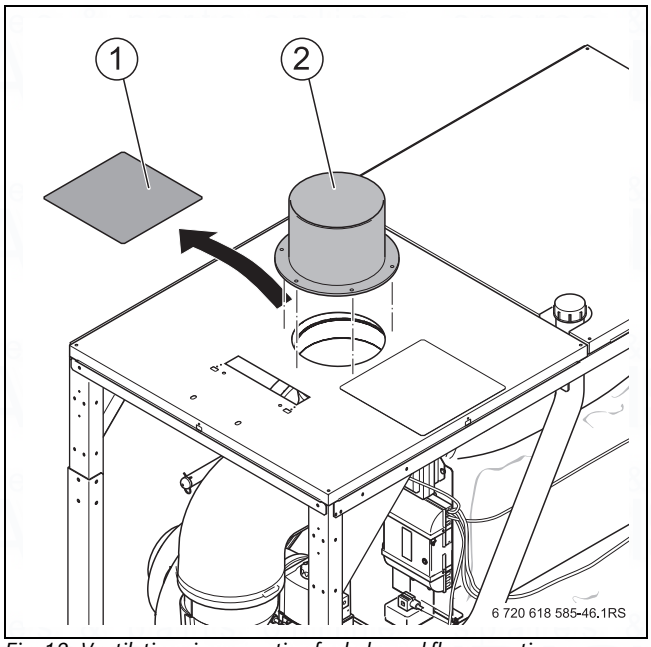

Fig. 12 Ventilation air connection for balanced flue operation (accessory)

[1] Guard
[2] Adaptor

6.5 Making the heating circuit connection

NOTICE: System damage due to leaking connections!
- ▶ Install all lines free from stress to the boiler connections.
- ▶ Use new gaskets if fittings need to be undone.
- ▶ Only tighten flanges in the heating flow and return after the connections have been made.
- ▶ Before installing the pipe connections, check connections and gaskets on the boiler for possible damage.

Boiler flow (VK) Boiler return (RK)	
DN80	PN6 standard flange EN1092

Tab. 9 Water connection dimensions

6.5.1 Connecting the flow

- ▶ Insert a gasket between the flange on the boiler and the threaded flange on the flow.
- ▶ Secure the flange connection with 4 screws, washers and nuts.

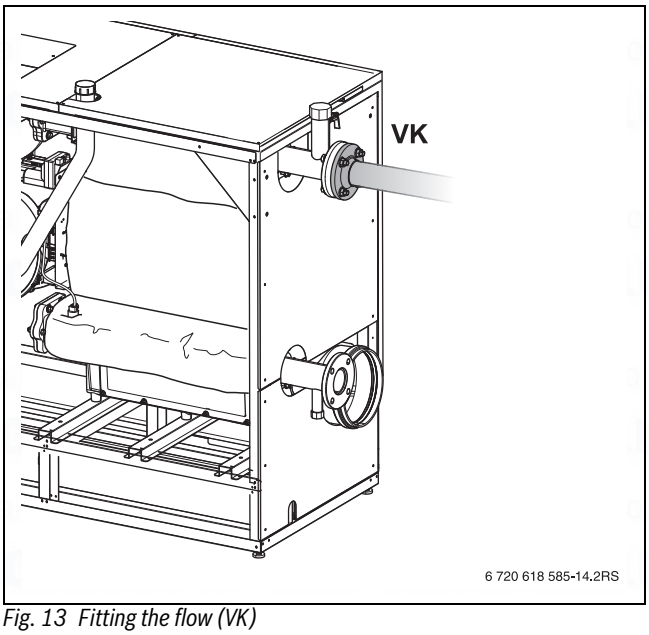

Fig. 13 Fitting the flow (VK)

6.5.2 Installing the safety assembly (on site)

NOTICE: System damage through incorrect installation!
- ▶ Install the safety valve and automatic air vent valve or safety assembly in the flow.

The safety assembly (accessory) comprises an automatic air vent valve and a pressure gauge. As an option, it may be converted for use with a safety valve (additional accessory) and a fitting manifold for the maximum pressure limiter.
If these accessories are not used, a safety valve, pressure gauge and an automatic air vent valve must generally be installed in the flow, upstream of the first shut-off valve.

- ▶ Seal in distributor [2] at flow connector [1] using a suitable sealant.
- ▶ Remove the union at the cap valve fitting [3].
- ▶ Fit union with gasket to connector of fitting manifold [4] and secure to the cap valve on the distributor.

▶ Level the fitting manifold and fit maximum pressure limiter [5].

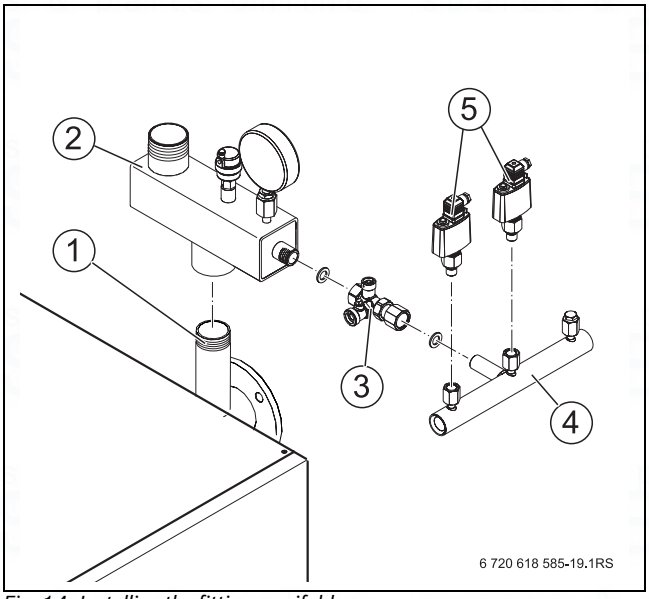

Fig. 14 Installing the fitting manifold

[1] Flow connector
[2] Distribution list
[3] Cap valve
[4] Fitting manifold complete with cap valve ¾ Inch
[5] Maximum pressure limiter

Subject to operating pressure, different safety valves are required.

▶ At an operating pressure up to 3 bar, seal in the safety valve at the distributor connector with a suitable sealant.

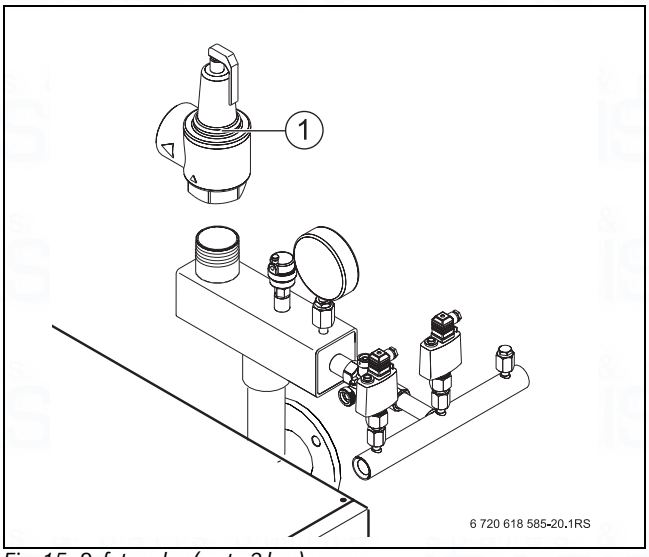

Fig. 15 Safety valve (up to 3 bar)

[1] Safety valve

▶ At an operating pressure of 3 to 6 bar, seal in female connection [4] and threaded flange [3] at the distributor connector with a suitable sealant. Secure safety valve [1] with gasket [2] on the threaded flange.
▶ Fit the blow-off line to the respective safety valve.

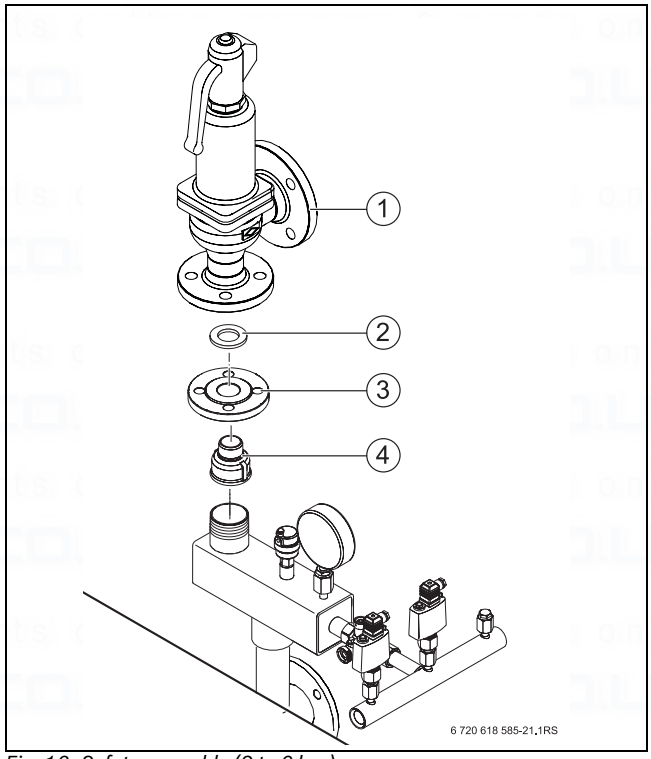

Fig. 16 Safety assembly (3 to 6 bar)

[1] Safety valve
[2] Seal
[3] Threaded flange
[4] Female connection

6.5.3 Connecting the return

We recommend the installation a dirt filter in the return to prevent contamination of the boiler by the water.

▶ Undo the threaded flange from the return.
▶ Fit the threaded flange to the return (on site) (→ Tab. 9, page 16).
▶ Insert a gasket between the flange on the boiler and the threaded flange on the return.
▶ Secure the flange connection with 4 screws, washers and nuts.

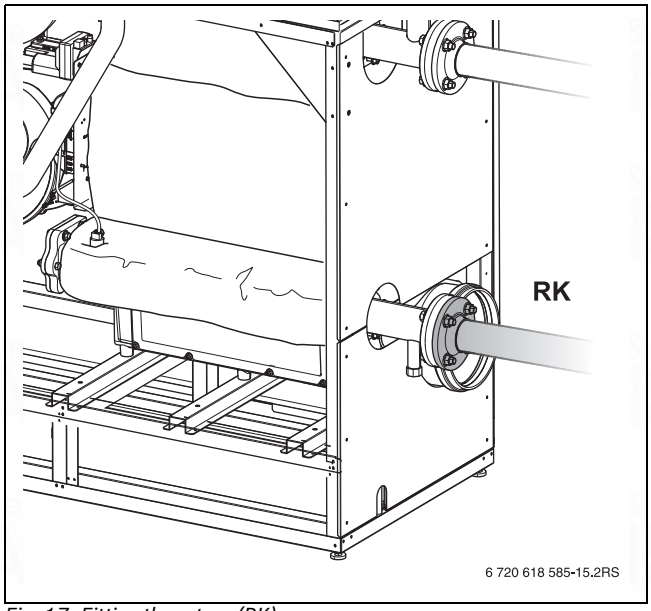

Fig. 17 Fitting the return (RK)

Connection the diaphragm expansion vessel (DEV)

To safeguard individual boilers, a DEV can be connected to the ¾ inch connection on the return, in accordance with EN 12828.

▶ Install the DEV on site to maintain the system pressure in the return, upstream of the pump.

Connecting the drain & fill valve on site

▶ To enable a topping up of the heating water, instruct the user about the location of the drain & fill valve.

▶ Install a drain & fill valve in the return outside the boiler itself.

6.5.4 Installing a DHW cylinder

Make the connection of a DHW cylinder to the flow and return on site. The MC10 + BC10 control unit can switch the required external cylinder primary pump (→ MC10/BC10 instructions).

6.6 Filling the heating system and checking for leaks

Before commissioning, check the heating system for leaks to prevent problems during operation.

▶ To ensure good ventilation, open all heating circuits and thermostatic valves prior to filling the system.

NOTICE: System damage through boiler scaling!

▶ Note the information specified in the operator's log.

NOTICE: Risk of system damage through excess pressure when testing for leaks!

Pressure, control and safety equipment may be damaged by excessive pressure.

▶ Pressure test the heating system after filling with the pressure that corresponds to the safety valve response pressure.

NOTICE: System damage!

If the heating system is filled when hot, the resulting temperature stresses can cause stress cracks. The boiler can then leak.

▶ Only fill the heating system when cold (the flow temperature should not exceed 40 °C).

▶ **Only fill the heating system via a WRAS approved method in accordance with the water regulations.**

▶ Pay attention to the water quality as specified in the operator's log, and record the volume and quality of fill water used.

CAUTION: Health risk through contaminated drinking water.

▶ Observe all country-specific regulations and standards regarding the prevention of drinking water contamination.

▶ In Europe, observe standard EN 1717.

▶ Prior to filling the heating system, carefully read the enclosed operator's log on water quality.

▶ Open safety caps on all automatic air vent valves.

▶ Open the fill & drain valve.

▶ Slowly fill the heating system using a filling facility. During the filling observe the pressure gauge.

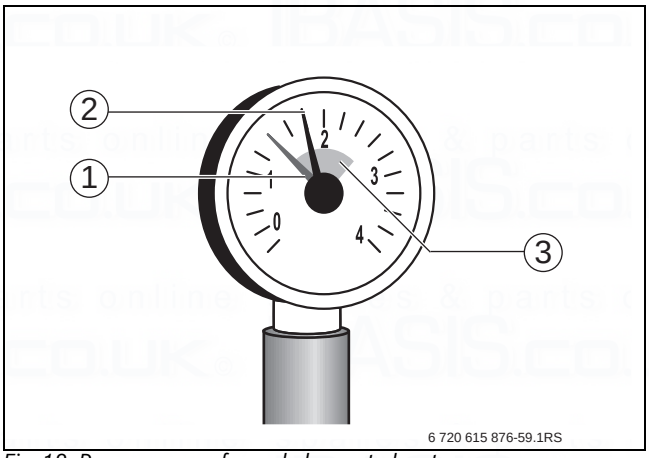

Fig. 18 Pressure gauge for sealed unvented systems

[1] Red needle
[2] Pressure gauge needle
[3] Green marking

▶ Ensure the heating system is only filled via a WRAS filling method in accordance with the water regulations. Most commercial heating system will be at least fluid category 4. The most common way to meet these requirements is by using an automatic fill unit incorporating an RPZ.

6.7 Making the electrical connection

The boiler can only function fully with an installed control unit.

DANGER: Risk to life from electric shock!

▶ Prior to all electrical installation work, isolate all poles of the mains power supply and secure against unintentional reconnection.

When connecting electrical components, also observe the connection diagram and instructions of the relevant product.

Observe the following points regarding the electrical connection:

- ▶ Electrical work on heating systems must only be carried out by qualified electricians. If you are not suitably qualified, have an electrical contractor carry out the electrical connections.
- ▶ Observe all local regulations!

6.7.1 Installing the control unit

Subject to preference, the control unit may be fitted in 2 different positions.

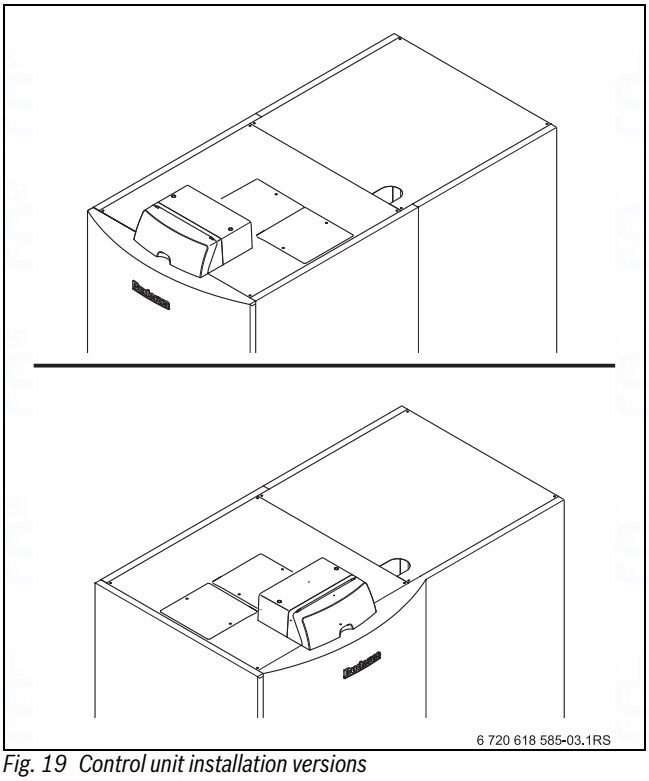

Fig. 19 Control unit installation versions

- ▶ Insert the push-in hooks of the control unit into the oval holes of the front boiler cover.
- ▶ Push the control unit towards the outside edge of the boiler.
- ▶ Let the resilient hooks of the control unit click into the openings by pushing the control unit.

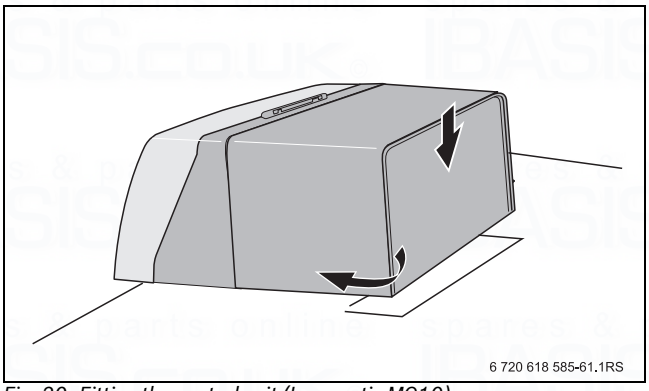

Fig. 20 Fitting the control unit (Logamatic MC10)

6.7.2 Making the power supply connection

Create a permanent power connection in accordance with local regulations.

- ▶ Release two screws on the control unit cover and remove it.

DANGER: Risk to life from electric shock!
Incorrectly terminated cables can result in faulty operation and possible dangerous consequences.

- ▶ When making the electrical connections, observe the connection diagram of the MC10 and its installation instructions (part of the standard delivery of the control unit).

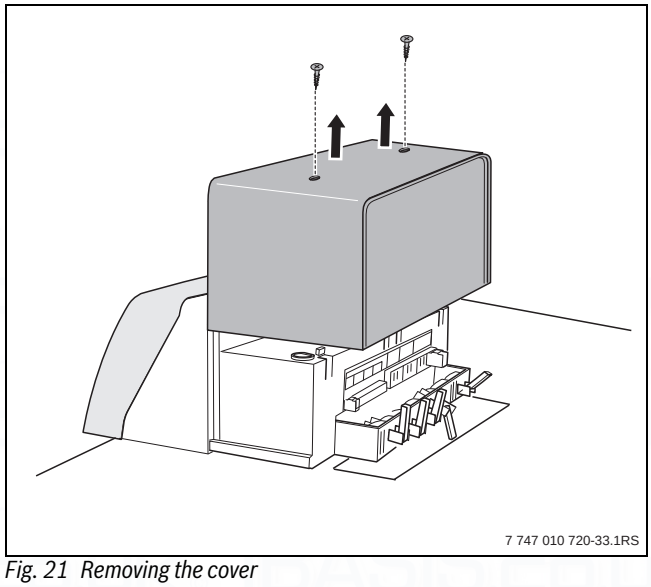

Fig. 21 Removing the cover

DANGER: Risk of fire through hot boiler components!
Hot boiler components may damage electrical cables and leads.

- ▶ Ensure that all cables are routed through the cable entries provided or along the boiler insulation material.

NOTICE: System damage through incorrect control!

- ▶ Route high and low voltage cables separately inside the cable conduits.

- ▶ Route all cables that run towards the back through the cable trunking.
- ▶ Route all cables through the cable entries to the control unit and connect in accordance with the connection diagram.

NOTICE: Operating faults through power failure!

- ▶ When connecting external components to the MC10 control unit, ensure that the total power consumption of these components does not exceed 5 A.

- ▶ Secure all cables with cable clips (part of the standard delivery).

1. Insert the cable clip together with the cable from the top into the slot in the frame.
2. Slide the cable clip downwards.
3. Counterhold.

4. Flip the lever up.

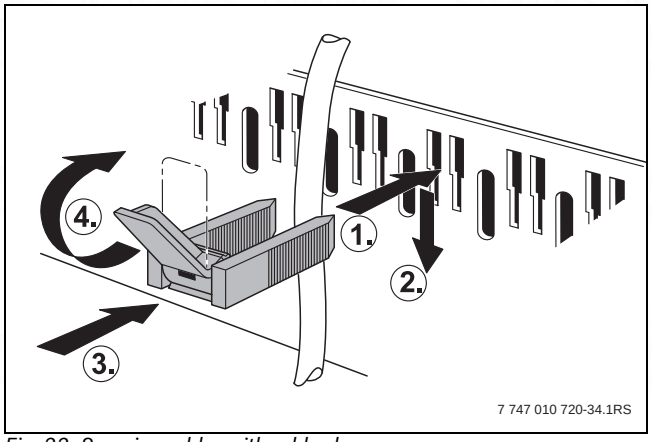

Fig. 22 Securing cables with cable clamps

Inserting the function module

In total, up to 2 function modules can be plugged into the control unit. Only one mixer module can be used as part of the system. For further supplementary modules, you require one additional enclosure (accessory).

Observe the installation instructions of the function module.

- ▶ Guide the outer rear hooks of the function module into the tabs on the control unit [1].
- ▶ Press the front of the module downwards.

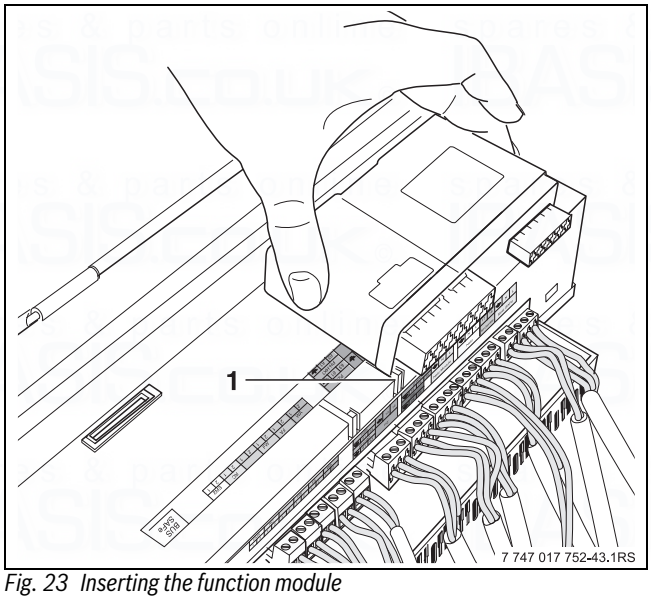

Fig. 23 Inserting the function module

Fitting the cover

- ▶ Push the control unit cover down into the guide rails.
- ▶ Tighten two screws to secure control unit cover.

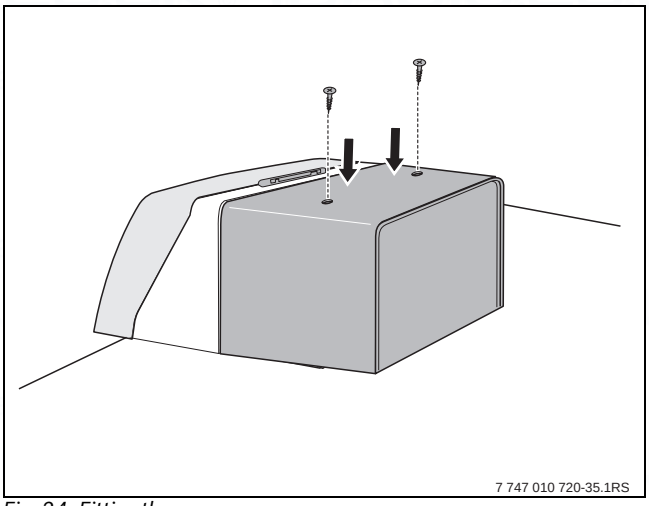

Fig. 24 Fitting the cover

6.8 Providing the fuel supply

DANGER: Risk to life from explosion of flammable gases!
- ▶ Work on components in contact with gas must only be carried out by certified gas fitters.
- ▶ Observe all local regulations relating to the gas connection.
- ▶ Seal in the gas connections with an approved sealant.

- ▶ Install gas tap R2" [2] in the gas line (GAS). When doing so, prevent the gas line inside the boiler from becoming twisted.

Subject to local regulations, install thermally activated shut-off equipment (TAE).
In addition, we recommend the installation of a gas filter and compensator in the gas line in accordance with local regulations.

- ▶ Connect anti vibration connection [1] (recommended) to the gas tap.
- ▶ Connect the gas line to the gas connection or anti vibration connection free of stress.
- ▶ Secure the gas line with pipe clips so that the gas connection is free from any stresses.
- ▶ Close the gas isolator.

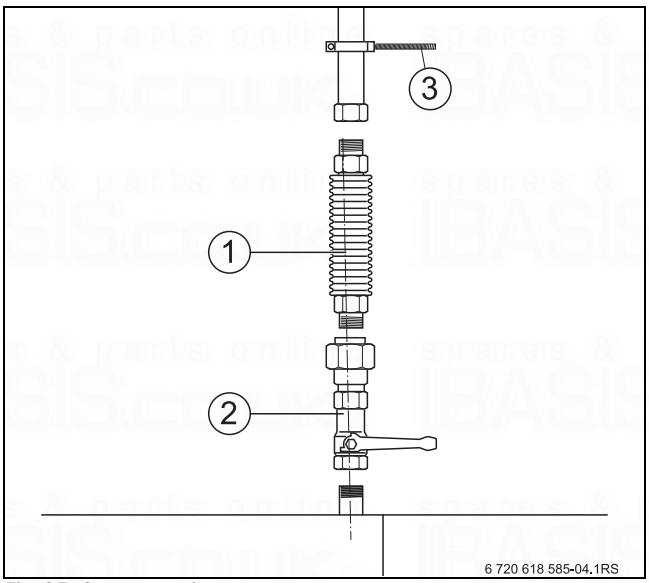

Fig. 25 Gas connection

[1] Anti vibration connection
[2] Gas isolation valve (here with thermally activated shut-off equipment)
[3] Pipe clip

For higher gas supply pressures than shown in Tab. 11, (→ page 24), Buderus offers additional gas pressure regulators as accessories.

7 Commissioning

This Chapter describes commissioning using the standard control unit module.

▶ After completing the work described below, complete the commissioning report (→ Chapter 7.18, page 28).

NOTICE: Boiler damage through excessive dust and dirt contamination in open flue mode!
Strong dust and dirt contamination can occur, for example, due to building work in the installation room.
▶ During building work, operate the boiler in balanced flue mode.

NOTICE: Risk of boiler damage through contaminated combustion air.
▶ Never use chlorinated cleaning agents or halogenated hydrocarbons (as contained in spray cans, solvents, cleaning agents, paints and adhesives, for example).
▶ Never store or use such substances in the installation room.

▶ Never operate the boiler when there is a lot of dust, e.g. due to building work. Never install air filters in the inlet path if there is a high dust load. Convert the boiler to balanced flue operation if the dust loads are excessive.
▶ Burners contaminated during building work must be cleaned before commissioning.
▶ Inspect flue and combustion air pipework (with balanced flue operation) and the apertures for combustion air supply and ventilation (→ Chapter 6.1, page 13).

7.1 Checking the operating pressure

This boiler cannot be operated with open vented heating systems.

▶ Prior to commissioning, check the operating pressure of the heating system on the water side and adjust if required.

NOTICE: System damage through boiler scaling!
▶ Note the information specified in the operator's log.

▶ Set the red needle [1] of the pressure gauge to the required operating pressure of at least **1 bar**.

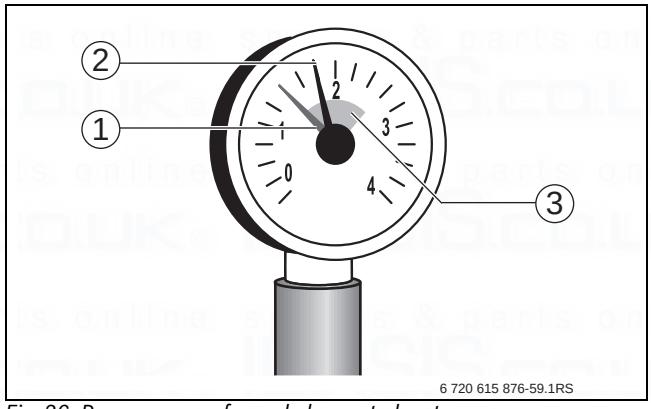

Fig. 26 Pressure gauge for sealed unvented systems

[1] Red needle
[2] Pressure gauge needle
[3] Green marking

CAUTION: Health risk through contaminated drinking water.
▶ Always observe the regulations and standards applicable in your jurisdiction for the prevention of contamination of drinking water (e.g. by water from heating systems).
▶ In Europe, observe standard EN 1717.

▶ Top up heating water or drain off water via the on-site drain & fill valve until the required operating pressure has been reached.
▶ During filling, vent the heating system via the radiator bleed valves.

7.2 Checking for leaks

Prior to commissioning, check all new line sections on the gas side for external gas tightness.

DANGER: Risk of explosion!
There is a risk of explosion if gas lines and gas connections leak.
▶ Carry out an appropriate tightness test using appropriate means.

DANGER: Risk of system damage due to short circuit!
▶ Cover the areas at risk before performing a tightness test, e.g. the internal water pressure sensor and the return sensor on the boiler return.
▶ Never spray or let leak detection agent drip onto cable entries, plugs or electrical cables/leads.

▶ Check the new pipe section, including the seal at the gas train, for external leaks.
The test pressure on the gas train inlet must be no higher than 150 mbar.

If a leak is discovered during this test, all connections must be checked using a foaming agent. The agent must be approved for gas tightness testing.
▶ Never allow the agent to come in contact with electrical cables.

▶ Confirm in the commissioning report that the tightness test has been carried out.

7.3 Recording gas parameters

Confirm gas parameters (Wobbe index and calorific value) and record these in the commissioning report (→ Chapter 7.18, page 28).

If the boiler is to be replaced in existing systems:
▶ Consult gas suppliers to ensure that the nominal gas pressure according to Tab. 5 page 10 (country-specific gas category and supply pressures) is adhered to.

7.4 Check the system equipment level

The burner is supplied ready for use with a particular gas group or subarea of a gas group as per the specifications of the delivery. This gas group or its subarea must be present in the supply area. If you discover that the boiler has been ordered with the wrong setting, the appliance must be converted and the data plate updated accordingly.

▶ Check with the relevant gas supplier which gas group or subarea is supplied.
▶ Compare the actual supply with the details indicated on the appliance.
▶ If necessary, affix the label [2] (supplied with the boiler) that corresponds to the supply over the appropriate area on the data plate [1] (on the back panel).

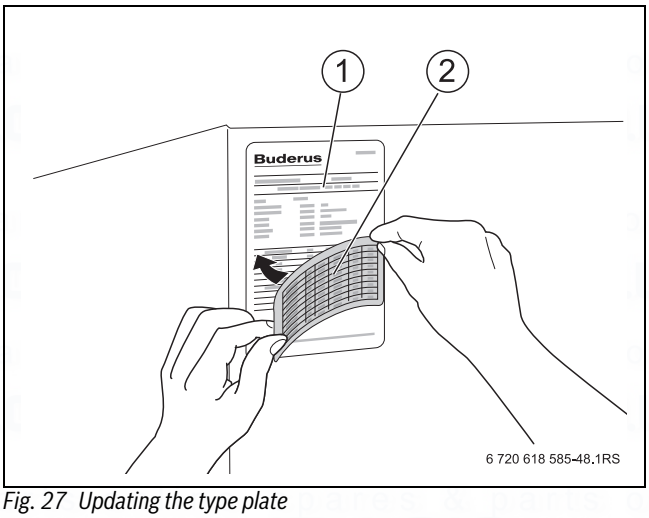

Fig. 27 Updating the type plate

Country:	Gas Type	Factory settings
AT, BE, CH, CZ, DE, DK, EE, ES, FR, GB, HU, IE, IT, LT, LU, LV, PL, PT, RO, RU, SI, SK, TR, UA	Natural gas group H (G20) Natural gas group E (G20) Subarea Es of natural gas group E (G20)	Factory-set ready for use. The gas train is adjusted and sealed. Upper Wobbe index for 15 °C, 1013 mbar: • Adjusted to 14.1 kWh/m^3 • Applicable for 11.4 to 15.2 kWh/m^3 Upper Wobbe index for 0 °C, 1013 mbar: • Adjusted to 14.9 kWh/m^3 • Applicable for 12.0 to 16.1 kWh/m^3 (Natural gas group "H according to DVGW Code of Practice G 260" falls within natural gas group "E according to DIN EN 437")
DE, FR	Natural gas group LL Subarea Ei of natural gas group E	Factory-set ready for use. The gas train is adjusted and sealed. Upper Wobbe index for 15 °C, 1013 mbar: • Adjusted to 12.1 kWh/m^3 • Applicable for 11.4 to 12.4 kWh/m^3 Upper Wobbe index for 0 °C, 1013 mbar: • Adjusted to 12.8 kWh/m^3 • Applicable for 12.0 to 13.1 kWh/m^3 (Natural gas group "L according to DVGW Code of Practice G 260" falls within natural gas group "LL according to DIN EN 437")
NL	Natural gas group L (G25)	Factory-set ready for use. The gas train is adjusted and sealed. Upper Wobbe index for 15 °C, 1013 mbar: • Adjusted to 11.5 kWh/m^3 • Applicable for 10.85 to 12.4 kWh/m^3 Upper Wobbe index for 0 °C, 1013 mbar: • Adjusted to 12.2 kWh/m^3 • Applicable for 10.6 to 13.8 kWh/m^3

Tab. 10 Factory settings

7.5 Purging the gas line

- ▶ Undo the threaded plug on the test nipple for gas supply pressure and venting by two turns and affix the hose.
- ▶ Slowly open the gas tap.
- ▶ Flare off escaping gas via a hydraulic seal. Remove the hose when no more air is expelled, and tighten the plug.
- ▶ Close the gas isolator.

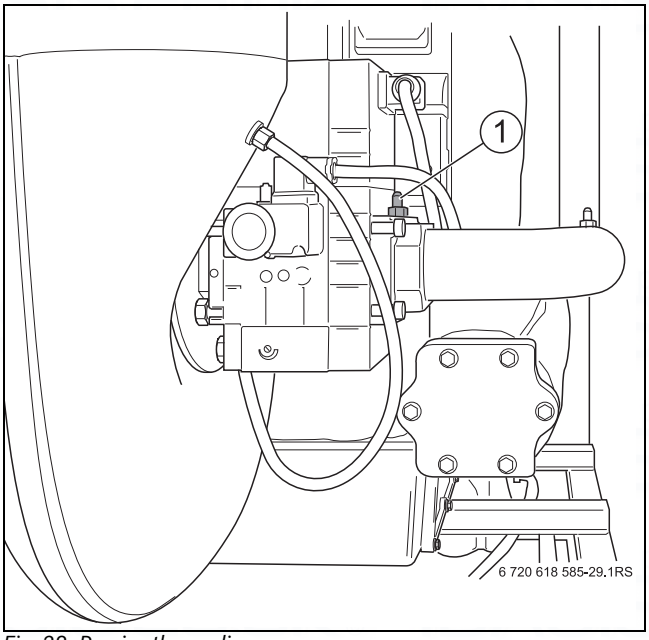

Fig. 28 Purging the gas line

[1] Test nipple for measuring the gas supply pressure and for venting

7.6 Checking the ventilation and extract air apertures and the flue connection

- ▶ Check whether the apertures for ventilation and extract air comply with locally applicable regulations or those of your gas supplier. Have any faults removed immediately.

DANGER: Risk to life through poisoning!
Insufficient ventilation can lead to dangerous flue gas leaks.

- ▶ Never block ventilation and extract air apertures or reduce their size.
- ▶ The boiler must not be operated, unless you immediately remedy the fault.
- ▶ Inform the system user in writing of the problem and associated risk.

- ▶ Check whether the flue connection complies with the applicable requirements (→ Chapter 6.1, page 13).
- ▶ Have any faults removed immediately.

7.7 Preparing the heating system for operation

- ▶ Open the fuel supply at the main shut-off valve and upstream of the gas valve.
- ▶ Switch on the heating system power supply and/or the corresponding domestic fuse/circuit breaker.

7.8 Commissioning the control unit and burner

7.8.1 Switching on the boiler at the BC10

- ▶ Set the rotary selector for “maximum boiler temperature” and the rotary selector for “set DHW temperature” to 0.
  This ensures that the burner will not start yet (there is no heat demand).
- ▶ Set the ON/OFF switch on the basic controller to position “1”.
  The entire heating system is switched on.
  During commissioning, “-” briefly flashes on the display, then fault display “4A”-“700” appears. Fault display “4A”-“700” appears, as the burner is supplied in a fault state.
- ▶ Wait approx. 1 minute to enable the EMS connection to the RC35 programming unit (available as an accessory) to be established.

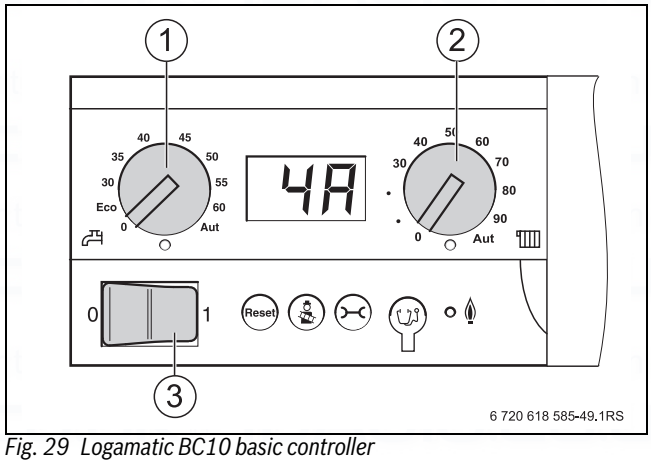

Fig. 29 Logamatic BC10 basic controller

[1] “Set DHW temperature” rotary selector
[2] “Maximum boiler temperature” rotary selector
[3] On/Off switch

- ▶ Press “Reset” on the BC10. The status display on the BC10 illuminates and the display shows the current boiler water temperature in °C.

If fault message “A11” appears, you must set the date and time on the RC35 programming unit. Only then will the current boiler water temperature be displayed.

Before continuing with further commissioning steps, set the correct parameters on the RC35 programming unit. The DHW heating configuration (heating circuit pump and cylinder primary pump) must be set correctly to ensure the heating system works properly. For this, observe the installation and maintenance instructions of the RC35 programming unit.

When using the Logamatic 4000 control system, take the following commissioning steps:

- ▶ Switch off the Logamatic 4000 control unit.
- ▶ Install the RC35 programming unit.

7.8.2 Carrying out a flue gas test

Key is used by your heating contractor for the flue gas test.

The heating control unit operates for 30 minutes at a higher flow temperature (ensure heat is drawn off at this time). During the flue gas test, the decimal point illuminates in the status display.

- ▶ Press until the decimal point in the status display illuminates (at least 2 seconds).
- ▶ Carrying out a flue gas test.

▶ Cancel the flue gas test; press ⚙ again.

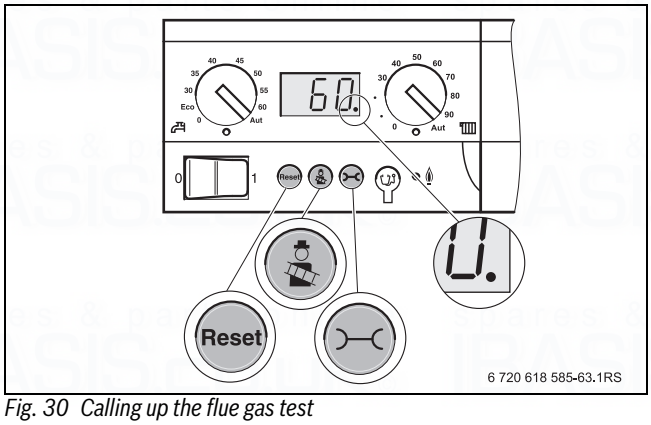

Fig. 30 Calling up the flue gas test

7.8.3 Accessing the service level on the RC35 and displaying monitoring data

▶ Press Menu/OK + Info + ↩ simultaneously to open the **SERVICE MENU** menu.

▶ Turn rotary selector anticlockwise until **diagnosis** is selected (marked with ▶).

```
SERVICE MENU
 quick operation
 settings
▶diagnosis
 servicing
```

▶ Press Menu/OK to open the **SERVICE/DIAGNOSIS** menu.

▶ Turn rotary selector anticlockwise until **monitor value** is selected (marked with ▶).

```
SERVICE/DIAGNOSIS
 function test
▶monitor value
 diagnosis
 servicing
```

▶ Press Menu/OK to open the **DIAGNOSIS/MON. VALUE** menu.

▶ Turn rotary selector anti-clockwise until **boiler / burner** is selected (marked with ▶).

```
DIAGNOSIS/MON. VALUE
▶boiler / burner
 domestic hot water
 heating circuit 1
 bus users
```

▶ Press Menu/OK to open **BOILER / BURNER** menu.
The values monitored are displayed as a list; in other words, more values might appear if the rotary selector is turned.

The current burner output (set/actual) and the flame current can be checked in these menus.

7.9 Testing the gas supply pressure

▶ Undo the threaded plug on the test nipple for gas supply pressure and venting by two turns.

▶ Push the test hose of the pressure gauge (measurement precision less than 0.1 mbar) onto the pressure test nipple [1].

▶ With the burner operational (full load), check the gas supply pressure and record the value in the commissioning report (→ Chapter 7.18, page 28).

▶ If the gas supply pressure falls outside the values in Tab. 11, shut down the boiler and notify the gas supplier. Commissioning is not permitted!

Checking the gas pressure regulator upstream of the appliance: If the burner is deactivated from full load, the resulting gas supply pressure must not exceed the value defined by the closing pressure group of the gas pressure regulator.
If the value is exceeded, contact the gas supplier (do not carry out commissioning).
If values > 50 mbar occur, the closing pressure group is not adequate. Shut down the boiler and inform the gas supplier that a pressure regulator with a better closing pressure group is required (do not carry out commissioning).

▶ Remove the test hose.

▶ Carefully tighten the threaded plug on the test nipple for gas supply pressure.

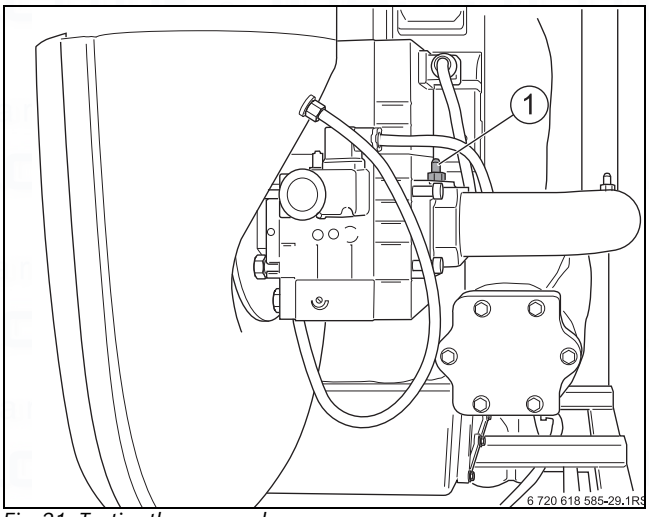

Fig. 31 Testing the gas supply pressure

[1] Pressure test nipple for testing the gas supply pressure and for venting

Country:	Gas group (reference gas)	Gas supply pressure 1) [mbar]		
		Min.	Rated	Max.
GB, IE	Natural gas H (G20)	17	20	25

Tab. 11 Gas groups and connection pressures according to EN 437

1) The gas supplier must ensure that the pressure conforms to country-specific and local regulations. In addition, the conditions referred to above must be met. If the gas supply pressure is outside the specified range, commissioning is prohibited.

The specified supply pressure must be ensured across the boiler's entire modulation range. If necessary, an additional pressure regulator must be provided.
In the case of multi-boiler or multi-consumer systems, the supply pressure range for single boilers must be ensured in each operating status of the multi-boiler or multi-consumer system. If necessary, supply each boiler or consumer via a separate pressure regulator.

For higher supply pressures than those shown in Tab. 11, an additional gas regulator must be installed.

7.10 Checking and adjusting the gas:air ratio

- Check CO2 settings for full and partial burner loads.
- Make corrections if required.

7.10.1 Setting and checking the CO_2 values under full load (70-80 %)

- Read off load at the RC 35 or via the service key.
- Wait until 70-80 % of the load is reached.
- Insert the test sensor through the test port (→ Fig. 36, page 26) in the flue into the core flow and check the CO_2 content.
- In the case of CO_2 values below 8,5 % or above 9,6 %, correct the setting on the high load adjusting screw to 9,1 % (see Fig. 32).
  - Turning clockwise will reduce the CO_2 level.
  - Turning anticlockwise increases CO_2.
- Check the CO_2 content again and enter the value into the commissioning report (→ Chapter 7.18, page 28).

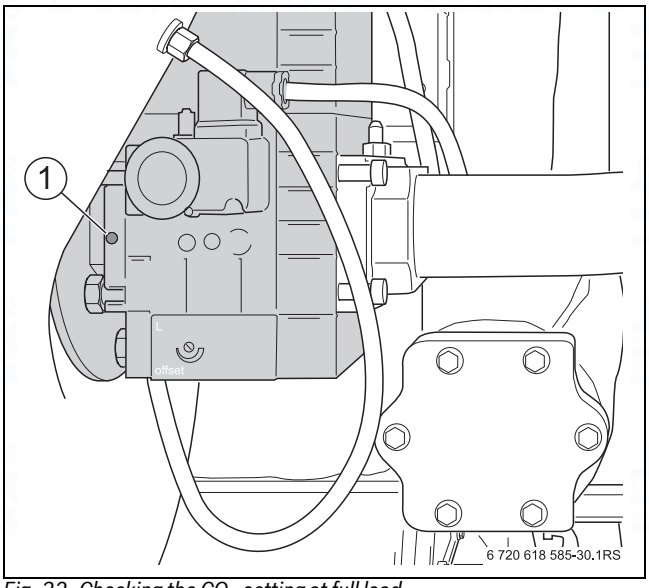

Fig. 32 Checking the CO_2 setting at full load

[1] Full load adjusting screw

7.10.2 Setting and checking the CO_2 values under partial load

- Press (⚙) until the decimal point in the status display **illuminates** (at least 2 seconds).
  This turns on the flue gas test.
- Press (⚙) and (⊂⊃) simultaneously and hold for approx. 5 seconds.

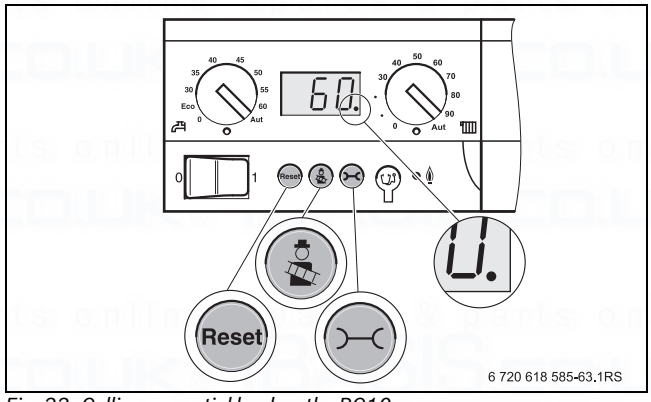

Fig. 33 Calling up partial load on the BC10

With standard settings, the display shows "L - - ".

- Press the (Reset) button to reduce the boiler output to a percentage of maximum until the display shows "L20".
- Read off load at the RC35 or via the service key.
- Wait until 20 % of the load is reached.
- Insert the test sensor through the test port (→ Fig. 36, page 26) in the flue into the core flow and check the CO_2 content.
- In the case of CO_2 values below 9,0 % or above 9,6 %, correct the setting on the partial load adjusting screw [1] to 9,3 %.
  - Turning clockwise will reduce the CO_2 level.
  - Turning anticlockwise increases CO_2.
- Check CO_2 content again and enter the value into the commissioning report, Chapter 7.18 (→ page 28).

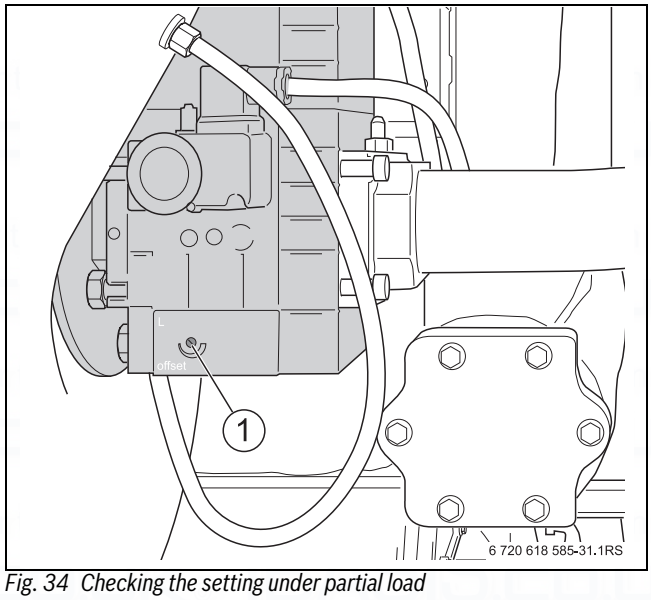

Fig. 34 Checking the setting under partial load

7.10.3 Checking the CO_2 setting under full load (70-80 %)

- Press (⚙) to increase the boiler output in percent.
- Read off load at the RC35 or via the service key.
- Wait until 70-80 % of the load is reached.

▶ Check the CO_2 content again (→ Chapter 7.10.1, page 25).

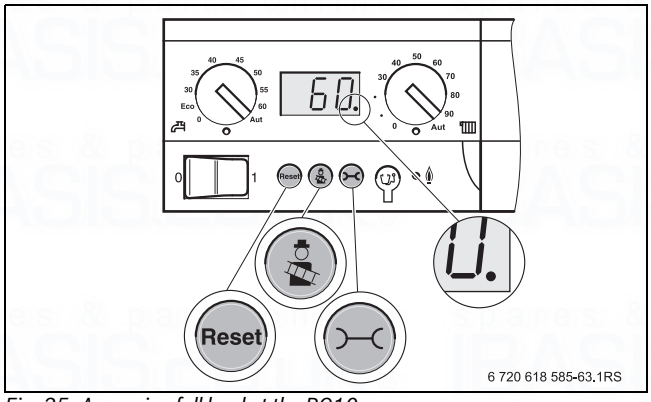

Fig. 35 Accessing full load at the BC10

7.11 Switching the status display on the BC 10 to show the boiler temperature status

▶ Press to change to the next status display.
The current operating pressure P1.7 is displayed.

▶ Press to change to the next status display.
Operating status 0Y (display code) is shown.

▶ Press to change to the next status display.
The boiler temperature is displayed.

7.12 Returning to operating mode from the flue gas test

▶ Press to terminate the flue gas test.

▶ Return to operating mode on the RC35.

▶ Close the flap on the RC35.

▶ If the boiler is designed for operation with the Logamatic 4000 control system, remove the RC35 again. Start the Logamatic 4000 control system.

7.13 Recording actual values

▶ Carry out the following tests at a test point in the boiler flue connection and enter the results in the commissioning report (→ Chapter 7.18, page 28):
- Flue dynamic pressure
- Flue gas temperature t_A
- Air temperature t_L
- Net flue gas temperature t_A - t_L
- Carbon dioxide content (CO_2) or oxygen content (O_2)
- CO value

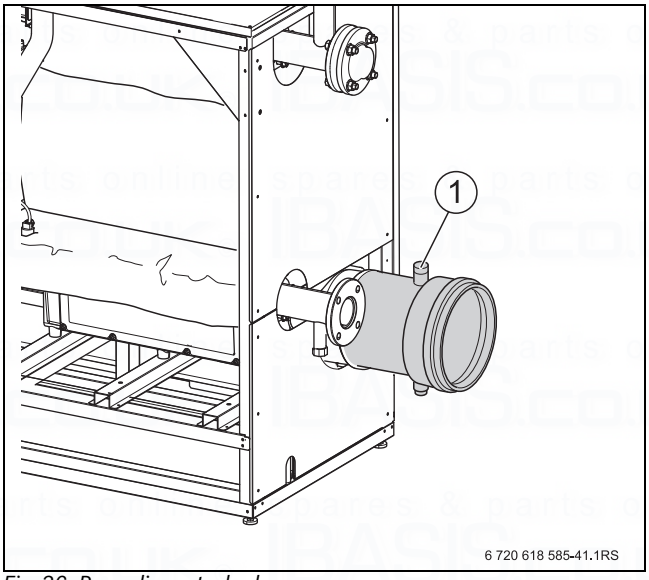

Fig. 36 Recording actual values

[1] Position of the test port in the flue

7.13.1 Feed pressure

The required draught for the installed flue gas/ventilation air system must not exceed 100 Pa (1.0 mbar).

DANGER: Risk to life through toxic flue gases escaping.
▶ Only operate the boiler with a chimney or flue system (→ Tab. 3, page 9).

7.13.2 CO value

CO values in an air-free state must be below 400 ppm or 0.04% vol.

Values above 100 ppm indicate and incorrect burner adjustment, incorrect appliance setup, burner and/or heat exchanger contamination or burner faults.

▶ Identify and eliminate the cause.

7.14 Function tests

During commissioning and the annual inspection, check all regulating, control and safety equipment for correct function and, where applicable, for correct settings.

7.14.1 Checking the ionisation current (flame current)

Accessing the service level on the RC35

- ▶ Open flap on RC35.
- ▶ Press Menu/OK + Info + ↩ simultaneously to open the **SERVICE MENU** menu.
- ▶ Turn rotary selector anticlockwise until **diagnosis** is selected (marked with ▶).

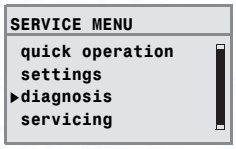

- ▶ Press Menu/OK to open the **SERVICE/DIAGNOSIS** menu.
- ▶ Turn rotary selector anticlockwise until **diagnosis** is selected (marked with ▶).
- ▶ Press Menu/OK to open the **SERVICE/DIAGNOSIS** menu.

The menu items shown will vary depending on the heating system.

- ▶ Hold down Menu/OK and turn rotary selector simultaneously to change the setting, e.g. flame current.
  The change takes effect when you release the key.
- ▶ Read off the ionisation current and enter it in the commissioning report (→ Chapter 7.18, page 28).
  To ensure fault-free operation, the ionisation current at partial and full load (with a burning flame) should be at least 15 µA.
- ▶ Return to operating mode on the RC35.
- ▶ Close the flap on the RC35.

7.15 Checking for leaks during operation

- ▶ With the burner operational, use a foaming agent to test all sealed points in the entire burner gas train, such as:

- Test nipple
- Plug for gas supply pressure
- Fittings (also at the gas connection) etc.

The agent must be approved for gas tightness testing.

DANGER: Risk of system damage due to short circuit!
- ▶ Cover the areas at risk before performing a tightness test, e.g. the internal water pressure sensor and the return sensor on the boiler return.
- ▶ Never spray leak detection agent onto cable entries, plugs or electrical cables. Do not allow it to drip onto them either.
- ▶ To prevent corrosion, carefully wipe off the leak detection agent afterwards.

7.16 Fitting sections of the casing

- ▶ Hook in the rear side panels first at the bottom (excluding insulation) [3], then raise slightly and hook in at the top.
- ▶ Using locking screws, secure the rear side panels to the boiler back panel [3].
- ▶ Hook in the front side panels first at the bottom (including insulation) [2], then raise slightly and hook in at the top.
- ▶ Using locking screws, secure the front side panels at the front [2] of the boiler.
- ▶ First hook in the bottom of the front panel [1], then raise slightly and hook in at the top.
- ▶ With locking screws, secure the top of the front panel [1] to the boiler.
- ▶ Affix the clear pocket containing the technical documentation in a clearly visible spot on the side of the boiler.

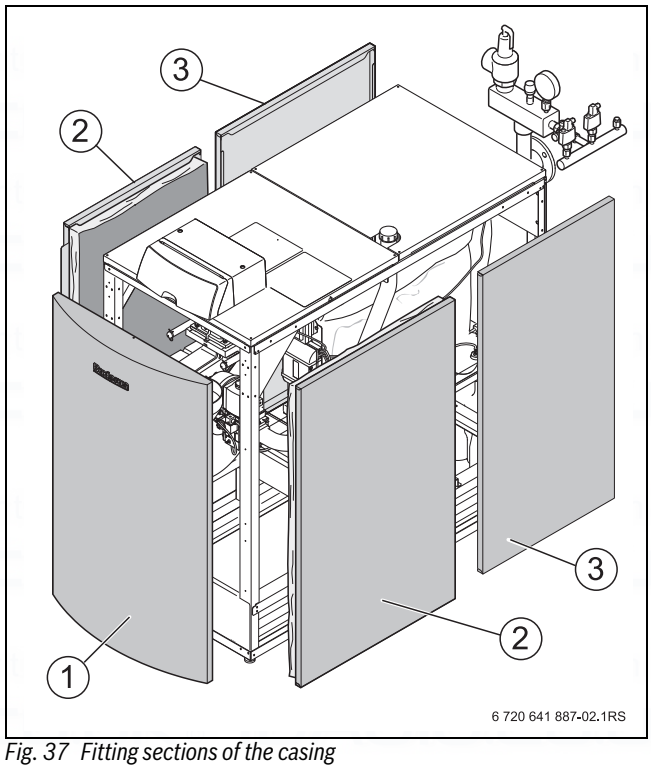

Fig. 37 Fitting sections of the casing

[1] Front panel
[2] Front side panels (incl. thermal insulation)
[3] Rear side panels (excl. thermal insulation)

7.17 Informing the owner/operator and handing over technical documentation

- ▶ Familiarise the owner/operator with the entire heating system and the operating instructions for the boiler.
- ▶ Together with the owner/operator, carry out a shutdown and restart.
- ▶ Explain to the customer what to do in an emergency, e.g. a fire, referring to the operating instructions.
- ▶ Hand over the technical documentation to the owner/operator, and both sign the commissioning report (→ Chapter 7.18, page 28).

7.18 Commissioning report

▶ Confirm commissioning as complete; sign and date the report.

	Commissioning steps	page	Measured values		Comments
1.	Fill the heating system and check for leaks	18	☐		
2.	Have the details regarding water quality in the log been observed?		Yes: ☐		
	- Concentration of additives		Additives: _____	Concentration: _____%	
3.	Record gas parameters: Wobbe index Net calorific value	22	_____ kW/m³ _____ kW/m³		
4.	Check the gas pipe for tightness	21	☐		
	– Vent gas line	23	☐		
5.	Create operating pressure	21	☐		
6.	Check the ventilation and extract air apertures and the flue connection	23	☐		
7.	Check the system equipment level	22	☐		
8.	Commissioning the control unit and burner	23	☐		
9.	Adjust gas type if required	25			
10.	Record actual values:	26	Full load	Partial load	
	- Draught		____Pa	____Pa	
	- Gross flue gas temperature t_A		____ °C	____ °C	
	- Air temperature t_L		____ °C	____ °C	
	- Net flue gas temperature t_A - t_L		____ °C	____ °C	
	- Carbon dioxide content (CO_2) or oxygen content (O_2)		____ %	____ %	
	Flue gas losses q_A		____ %	____ %	
	- CO value, free of air		____ ppm	____ ppm	
11.	Testing the gas supply pressure	24	_____ mbar		
12.	Checking for leaks during operation	27	☐		
13.	Function tests	27			
	– Checking the ionisation current		_____ µA		
14.	Fitting sections of the casing	27	☐		
15.	Inform operator; hand over technical documentation	27	☐		
16.	Correct commissioning by the installing contractor		Signature:_____		
17.	User signature		Signature:_____		

Tab. 12 Commissioning report

8 Shutting down the heating system

NOTICE: System damage due to frost!
When the heating system is switched off, it can freeze up if there is frost.
▶ In case of a risk from frost, protect the heating system against frost damage. To do so, drain the heating water at the lowest point of the heating system. Do this by opening the air vent valve at the highest point in the heating system.

8.1 Shutting down the heating system via the control unit

Shut down the heating system via Logamatic BC10 base controller. The burner shuts down automatically. For more detailed information about using the Logamatic BC10 basic controller, refer to Chapter 7, (→ page 21).

▶ Switch the heating system OFF at the ON/OFF switch on the BC10.
▶ Close the main fuel shut-off valve.

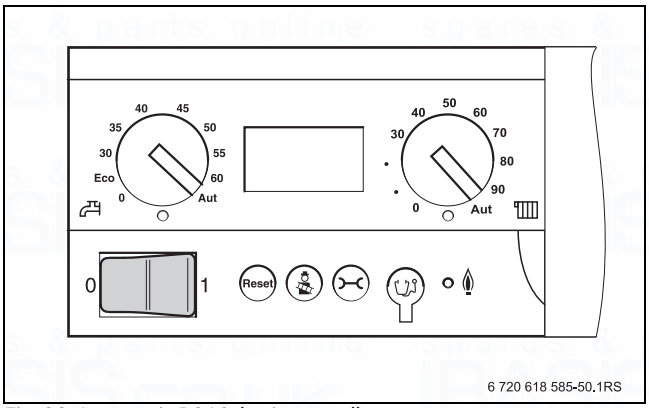

Fig. 38 Logamatic BC10 basic controller

8.2 Shutting down the heating system emergency shutdown

Only shut down the heating system via the installation room fuse/circuit breaker or the heating system emergency shut-off switch in emergencies.

Explain to the customer what to do in an emergency, e.g. a fire.

▶ Never risk your own life. Your own safety is paramount.
▶ Close the main fuel shut-off valve.
▶ Isolate the heating system from the mains power supply by means of the heating system emergency stop switch or the appropriate domestic fuse/circuit breaker.

9 Inspection and maintenance

Heating systems should be regularly serviced for the following reasons:

- to maintain a high level of efficiency and to operate the system economically (low fuel consumption),
- to achieve a high level of operational reliability
- to maintain the cleanest possible combustion
- to ensure reliable operation and a long service life.

Maintenance must only be carried out by qualified service engineers. If parts are replaced, use exclusively Buderus-approved components. The system should be serviced annually. The results of the services must be recorded in the inspection and maintenance report.

Offer your customer an annual contract covering inspection and demand-dependent service. The work that needs to be included in a maintenance contract is detailed in the inspection and maintenance reports (→ Chapter 9.14, page 40).

Spare parts can be ordered from the Buderus spare parts service.

9.1 Preparing the boiler for inspection

DANGER: Risk to life from electric shock!
▶ Before opening up the boiler, isolate it completely from the mains power supply and ensure the power cannot be inadvertently reconnected.

▶ Shutting down the heating system.
▶ Undo the locking screw from the top centre of the boiler front panel.
▶ Slightly lift the front panel and remove by pulling forwards.

DANGER: Risk to life from explosion of flammable gases!
▶ Only registered gas fitters are permitted to carry out work on gas lines (observe local regulations).

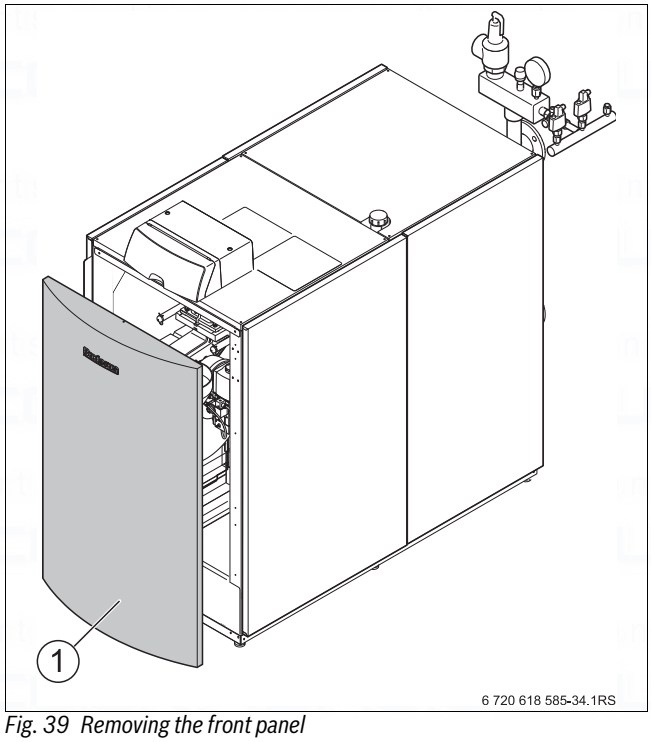

Fig. 39 Removing the front panel

[1] Front panel

9.2 General work

The following work is not described in any further detail in this document. It must, nevertheless, still be carried out:

▶ Check the general condition of the heating system.
▶ Visual inspection and function check of the heating system.
▶ Check the ventilation air and flue gas routing for function and safety.
▶ Check all gas and water pipes for signs of corrosion.
▶ Replace any corroded lines.
▶ Check the pre-charge pressure of the diaphragm expansion vessel.
▶ Check the concentration of any antifreeze/additives that may be used in the system fill/top-up water annually.

9.3 Internal leak test

9.3.1 Determining the test volume

$V_{test} = V_{total} = V_{pipe} + V_{gas\ train}$

- ▶ Determine the length of pipe to the main fuel shut-off valve.
- ▶ Determine the gas train volume ($V_{gas\ train}$) using Tab. 13.
- ▶ Determine the pipe volume (V_{pipe}) using Tab. 14 and Tab. 15).
- ▶ Calculate the test volume (V_{test}) according to the above equation.

Gas valve volume (approximate values)	
Gas valve volumes up to 50 kW	0.1 litre
Gas valve volume > 50 kW	0.2 litre

Tab. 13 Gas train volume ($V_{gas\ train}$)

Pipework length	Pipework volume (V_{pipe}) in litres Pipework diameter in inches					
in metres	½	¾	1	1¼	1½	2
1	0.2	0.4	0.6	1.0	1.4	2.2
2	0.4	0.7	1.2	2.0	2.7	4.4
3	0.6	1.1	1.7	3.0	4.1	6.6
4	0.8	1.5	2.3	4.0	5.5	8.8
5	1.0	1.8	2.9	5.1	6.9	11.0
6	1.2	2.2	3.5	6.1	8.2	13.2
7	1.4	2.5	4.1	7.1	9.6	15.4
8	1.6	2.9	4.6	8.1	11.0	17.6
9	1.8	3.3	5.2	9.1	12.4	19.8
10	2.0	3.6	5.8	10.1	13.7	22.0

Tab. 14 Pipework volume (V_{pipe}) subject to pipe length and diameter

Pipework length	Pipework volume (V_{pipe}) in litres Pipework diameter in mm (copper pipe)					
in metres	15 x 1	18 x 1	22 x 1	28 x 1.5	35 x 1.5	45 x 1.5
1	0.1	0.2	0.3	0.5	0.8	1.4
2	0.3	0.4	0.6	1.0	1.6	2.8
3	0.4	0.6	0.9	1.5	2.4	4.2
4	0.5	0.8	1.3	2.0	3.2	5.5
5	0.7	1.0	1.6	2.5	4.0	6.9
6	0.8	1.2	1.9	2.9	4.8	8.3
7	0.9	1.4	2.2	3.4	5.6	9.7
8	1.1	1.6	2.5	3.9	6.4	-
9	1.2	1.8	2.8	4.4	7.2	-
10	1.3	2.0	3.1	4.9	8.0	-

Tab. 15 Pipework volume (V_{pipe}) subject to pipe length and diameter

9.3.2 Carrying out a leak test

- ▶ Close the main fuel shut-off valve.
- ▶ Undo threaded plug on test nipple by two turns.
- ▶ Push the test hose of the U-tube pressure gauge onto the test nipple.
- ▶ Open main fuel shut-off valve, read off pressure and note it down.
- ▶ Close main fuel shut-off valve and read off the pressure again after one minute.
- ▶ Calculate the pressure drop per minute from the differential.

Using the calculated pressure drop per minute and the test volume (V_{test}), refer to the following diagram (→ Fig. 41) to see whether the gas valve can still be used.

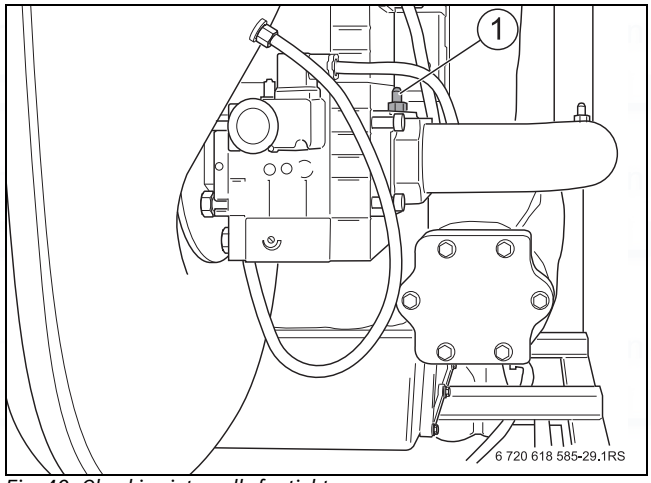

Fig. 40 Checking internally for tightness

[1] Test nipple

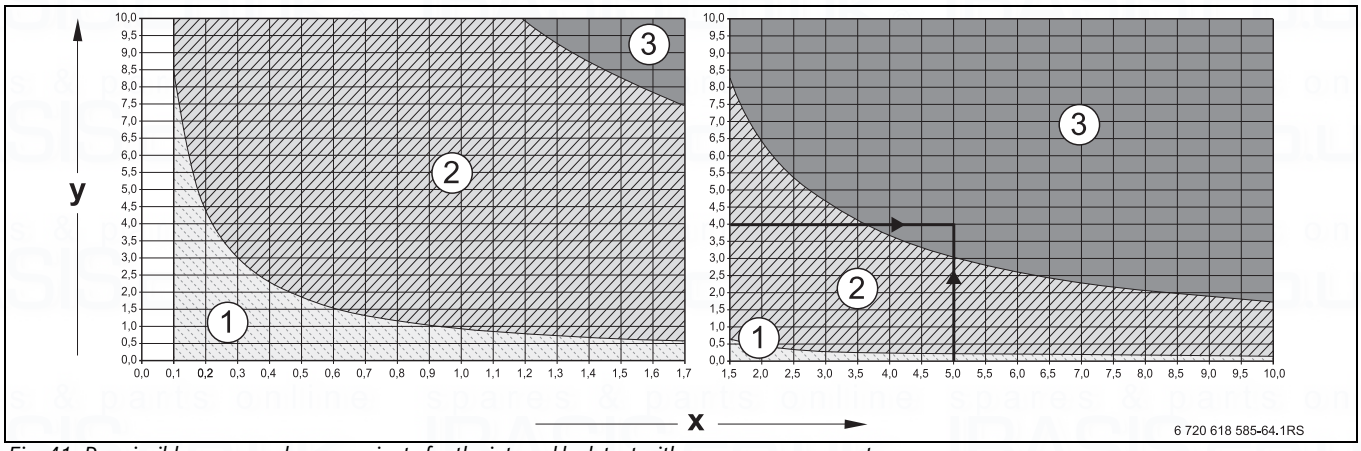

Fig. 41 Permissible pressure drop per minute for the internal leak test with gas pressure present

[x] Test volume in litres
[y] Pressure drop in one minute in mbar
[1] Range "Valve tight" = applies to new installations
[2] Range "Valve adequately tight" = valve can be used without restrictions
[3] Range "Valve leaks" = valve may not be used >> check as described in the following
[]
[] **Read-off example**: test volume (V_{test}) 5 litres and pressure drop 4 mbar/min = range 3 "Tap leaking" = tap may not be used >> carry out test as described below

---

If you detect a steep pressure drop of > 10 mbar/minute at a test volume of (V_{test}) of < 1, increase the test volume (V_{test}). For this, include the pipework to the next shut-off valve in the tightness test and repeat the test using the new test volume (V_{test}).

If the read-off point for test volume (V_{test}) and pressure drop per minute lies within the range "Valve leaks" (see read-off example), carry out the test described below.

DANGER: Risk of system damage due to short circuit!
- ▶ Never spray or let leak detection agent drip onto cable entries, plugs or electrical cables/leads.
- ▶ Cover areas at risk before testing for leaks.

- ▶ Check all sealed points in the tested pipework section using a foaming leak detection agent.
- ▶ If required, seal any leaks and repeat the test.
- ▶ If no leaks are found, replace gas train.

Completing the leak test

- ▶ Remove hose.
- ▶ After completing the test, retighten the screw in the test nipple.
- ▶ Check the test nipple for leaks.

9.4 Checking the heating system operating pressure

NOTICE: System damage!
If the heating system is filled when hot, the resulting temperature stresses can cause stress cracks. The boiler can then leak.

- ▶ Only fill the heating system when cold (the flow temperature should not exceed 40 °C).
- ▶ **Only fill the heating system via a WRAS approved method.**
- ▶ Pay attention to the water quality as specified in the operator's log, and record the volume and quality of fill water used.

NOTICE: System damage due to frequent topping up.
Depending on water quality, the heating system may be damaged by corrosion or limescale formation if you frequently need to top up the water (observe the operator's log).

- ▶ Vent the heating system during filling.
- ▶ Check the heating system for leaks.
- ▶ Check the function of the expansion vessel.

In sealed unvented systems the pressure gauge needle must be within the green marking.

Ensure that the red pressure gauge needle is set to the required operating pressure.

Create an operating pressure of at least 1 bar.

- ▶ Check the operating pressure of the heating system.
  The operating pressure is too low if the pressure gauge needle is below the green marking. Top up with water.

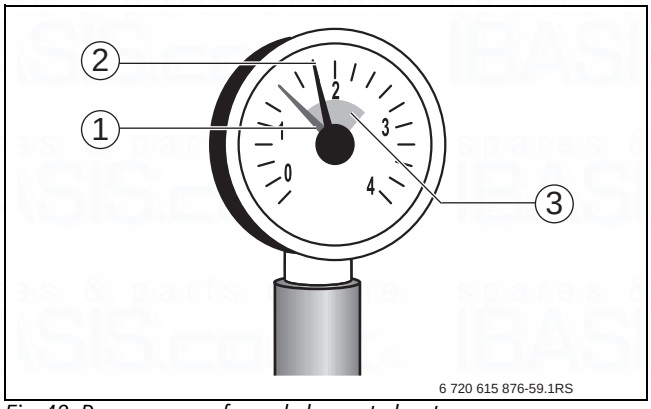

Fig. 42 Pressure gauge for sealed unvented systems

[1] Red needle
[2] Pressure gauge needle
[3] Green marking

CAUTION: Health risk from contaminated drinking water.

- ▶ Observe all country-specific regulations and standards regarding the prevention of drinking water contamination.

- ▶ Vent the heating system via the radiator air vent valves.
- ▶ Check the operating pressure again.

The operating pressure can also be checked at the control unit via the "Info menu" (e.g. display "P1.4" corresponds to 1.4 bar).

- ▶ Enter amount of top-up water in the operator's log.

9.5 Measuring carbon dioxide content

- ▶ Insert the test sensor through the test port in the flue pipe and hold it in the core gas flow.
- ▶ Record the flue gas values.
  If the CO_2 content deviates by more than 0,5 % from its set value (→ Tab. 3, page 9), adjust the burner as described in Chapter 7.10, page 25 to 7.10.2, page 25.

9.6 Cleaning the burner and heat exchanger

Clean the boiler wet or dry.

Long and short cleaning blades are available as accessories for dry cleaning. Cleaning equipment is available as an accessory for wet cleaning.

- ▶ Shut down the heating system (→ Chapter 7, page 21).
- ▶ Close the main gas shut-off valve.
- ▶ Allow the boiler to cool down.
- ▶ Remove siphon [2] from the outlet of condensate pan [1] and position a bucket underneath the pan.

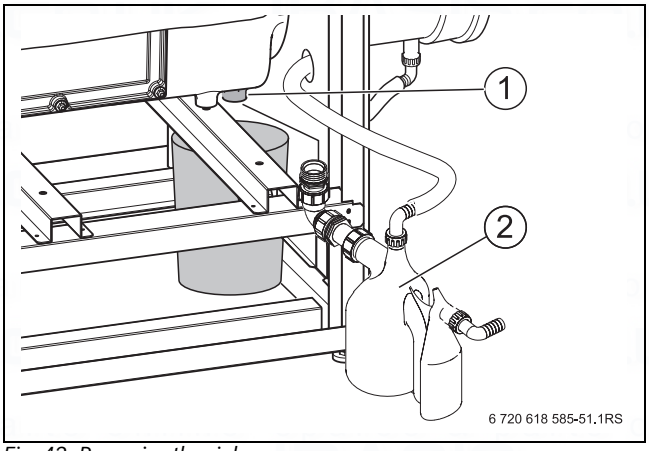

Fig. 43 Removing the siphon

[1] Condensate pan outlet
[2] Siphon

9.6.1 Burner Removing and cleaning

▶ Undo toggle clip [1] at the top of the ventilation air hose.
▶ Pull off ventilation air hose [2] together with the connector from ventilation air collector [3].

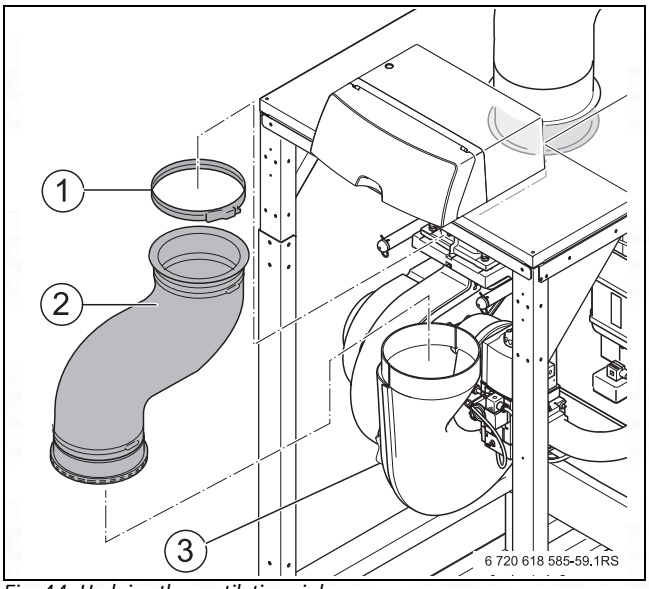

Fig. 44 Undoing the ventilation air hose

[1] Toggle clip
[2] Inlet hose
[3] Ventilation air collector

▶ Undo the 4 screws from gas valve flange [1] and undo the gas connection.

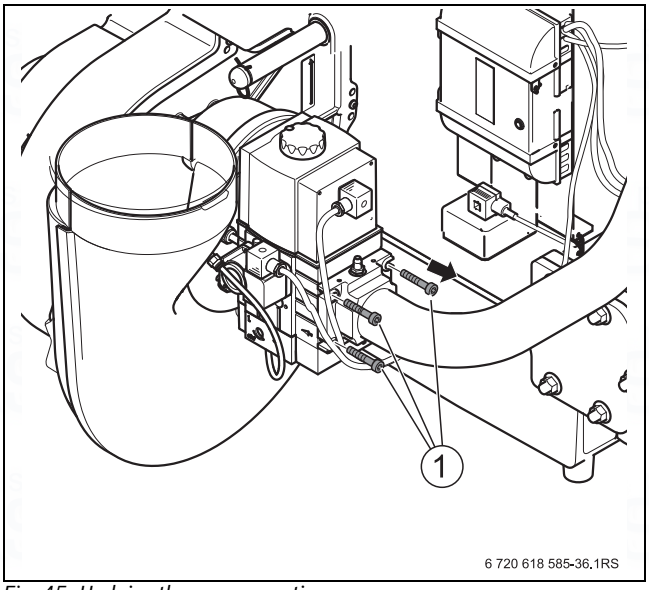

Fig. 45 Undoing the gas connection

[1] Screws

▶ Undo all electrical plug-in connections at the electrode block.

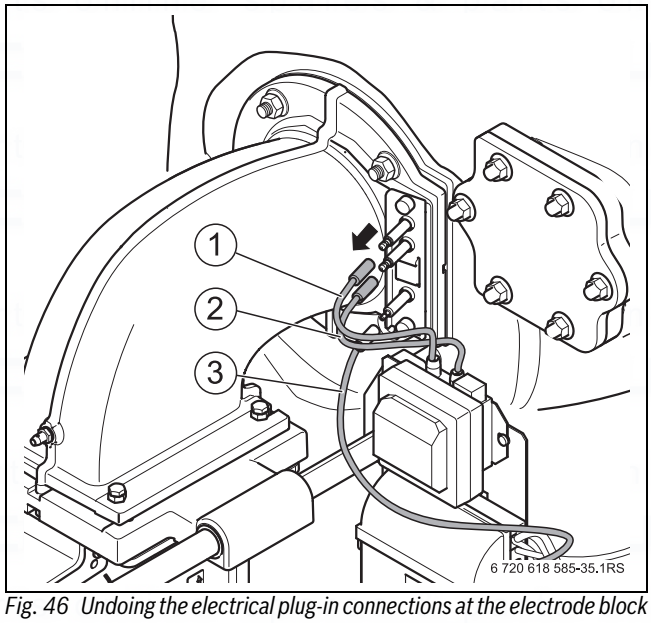

Fig. 46 Undoing the electrical plug-in connections at the electrode block

[1] Monitoring cable
[2] Ignition cable
[3] Ignition cable

▶ Undo fixing nuts [1] at the top and bottom of the mixture manifold.
▶ Undo the electrical connections at the gas valve and the fan (→ Fig. 56, page 36).
▶ Carefully pull out the burner towards you.

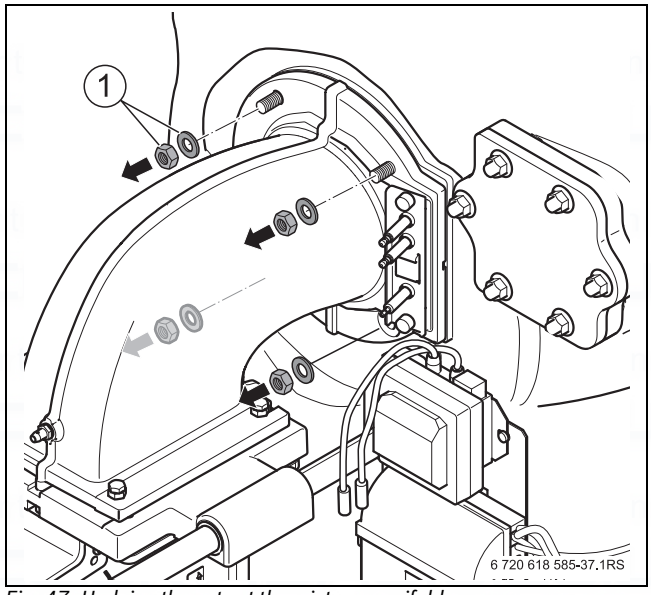

Fig. 47 Undoing the nuts at the mixture manifold

[1] Fixing nuts with washer

▶ Undo all 4 screws [1] between the mixture manifold and the carriage.

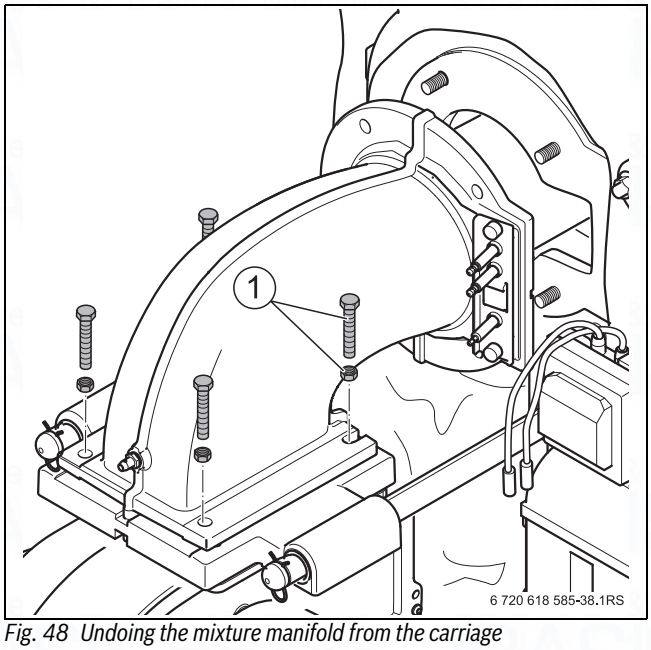

Fig. 48 Undoing the mixture manifold from the carriage

[1] Screws and locknuts

▶ Pull out the burner together with the mixture manifold.

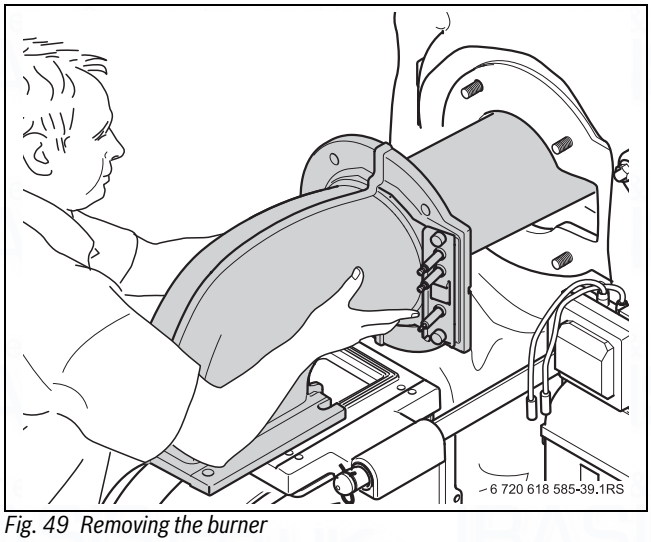

Fig. 49 Removing the burner

▶ Blow off the burner rods and mixture manifold from the inside and outside using a reasonable amount of compressed air (max. 3 bar).

If there is heavy contamination, the burner rod can be separated from the mixture manifold and a blow gun with a long, angled blow pipe can be used to blow them off from the inside and outside using a reasonable amount of compressed air (max. 3 bar).

▶ Re-install the burner rod with a new gasket.

9.6.2 Cleaning the heat exchanger

Dry cleaning the heat exchanger

▶ Remove the thermal insulation from the heat exchanger.

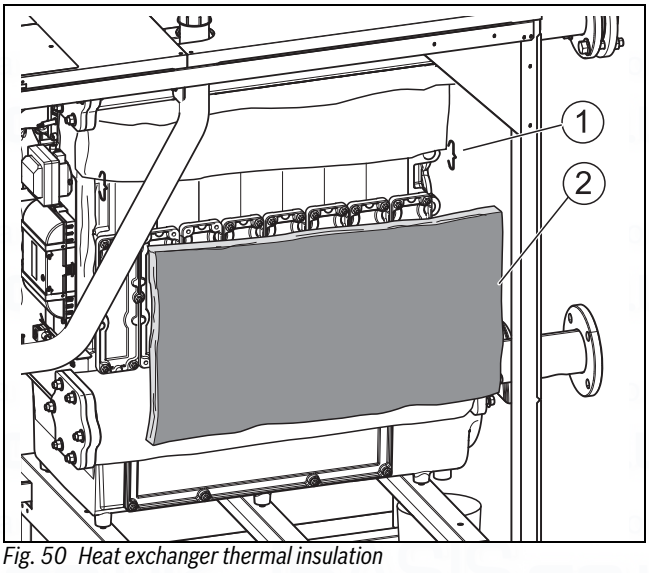

Fig. 50 Heat exchanger thermal insulation

[1] Clamp

[2] Thermal insulation

▶ Undo fixing nuts from cleaning covers [1] at the top and bottom of the heat exchanger.

▶ Remove the cleaning covers.

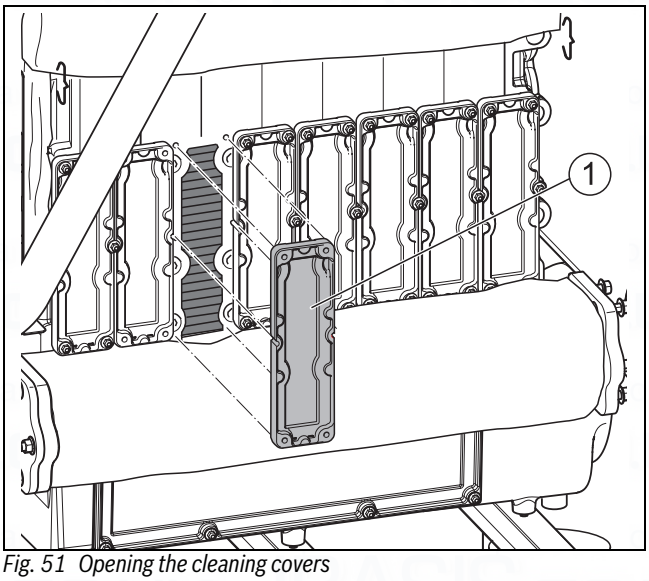

Fig. 51 Opening the cleaning covers

[1] Cleaning cover

▶ Undo the fixing nuts from the top and bottom of the condensate pan cover.

▶ Removing the cover.

CAUTION: Risk of injury from sharp edges on the cleaning blades.

▶ To avoid injury, wear gloves when cleaning the boiler using cleaning blades (accessories).

- ▶ Clean the hot gas flues of the heat exchanger horizontally and diagonally using the long cleaning blade.
- ▶ Clean the back section of the hot gas flues from below through the condensate pan using the short cleaning blade.

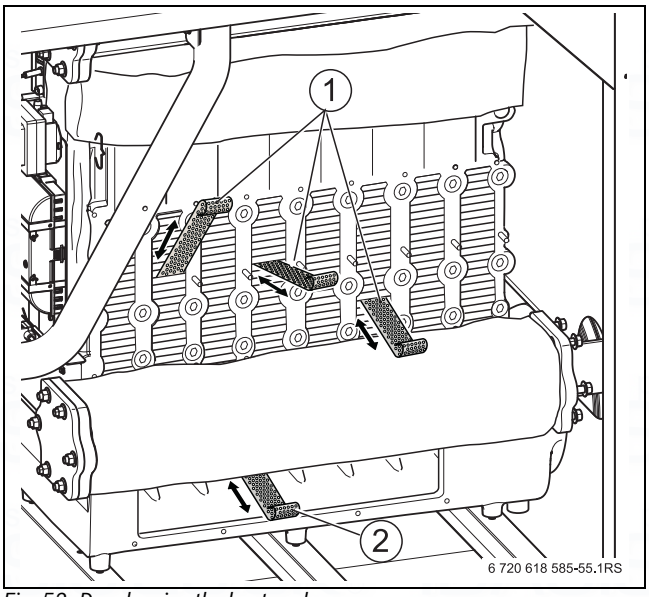

Fig. 52 Dry cleaning the heat exchanger

[1] Long cleaning blade (available separately)
[2] Short cleaning blade (available separately)

DANGER: Risk to life through escaping flue gas!
- ▶ During installation, look out for faulty gaskets and ensure they are seated correctly. Replace faulty gaskets.
- ▶ Replace the gaskets as described (→ Chapter 9.13, page 39).

- ▶ Screw the cleaning covers back on.

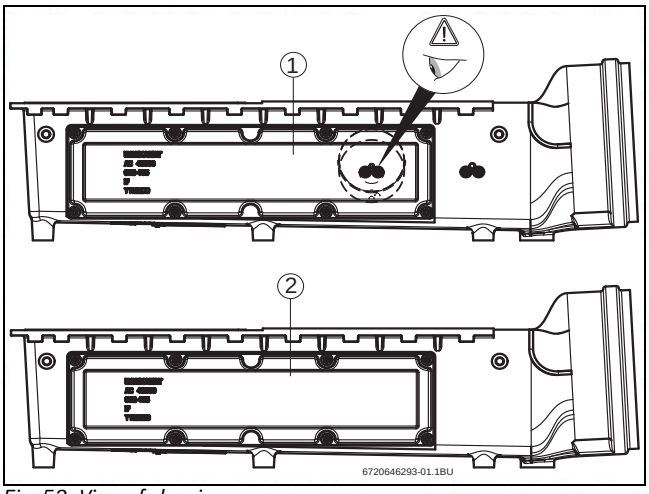

Fig. 53 View of cleaning cover

[1] 320 kW
[2] 395-620 kW

Wet cleaning the heat exchanger

When wet cleaning, use a cleaning agent appropriate to the level of contamination (soot or encrusted residues). The cleaning agent must be suitable for aluminium!

- ▶ Clean the heat exchanger with water or a cleaning agent suitable for aluminium (see instructions provided by the manufacturer of the cleaning agent).

During wet cleaning, protect electrical components (fan, gas train etc.) against moisture and contamination.

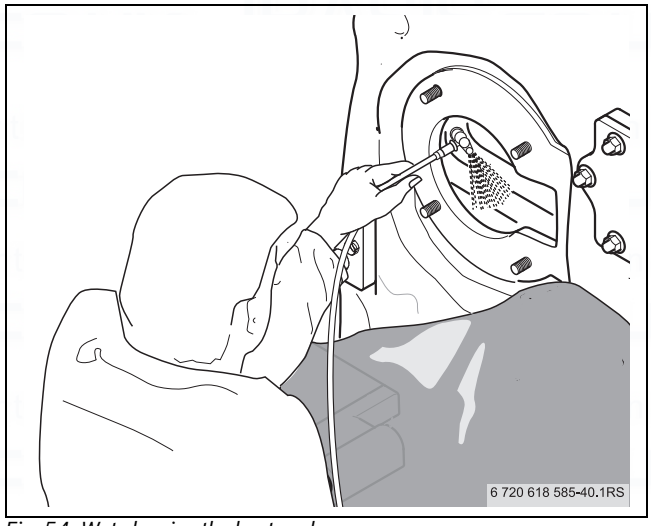

Fig. 54 Wet cleaning the heat exchanger

Working on the heat exchanger during wet anddry cleaning

- ▶ Use a hose to flush any residues into the bucket or the condensate pan.
- ▶ Clean the condensate pan with water.
- ▶ Clean the siphon with water.

DANGER: Risk to life through poisoning! Siphons not filled with water can cause a risk to life through escaping flue gas.
- ▶ Fill the siphon with approx. 2 litres of water.

- ▶ Re-install the siphon (→ Chapter 6.2, page 14).
- ▶ Check the condensate hose between the boiler flue connection and the siphon for free flow.

9.7 Inspection of Burner electrodes

Checking the electrode position

- ▶ Move the burner into its service position (→ Chapter 9.6, page 32).
- ▶ Check the gaps between the electrodes and compare them with those shown in Fig. 55.

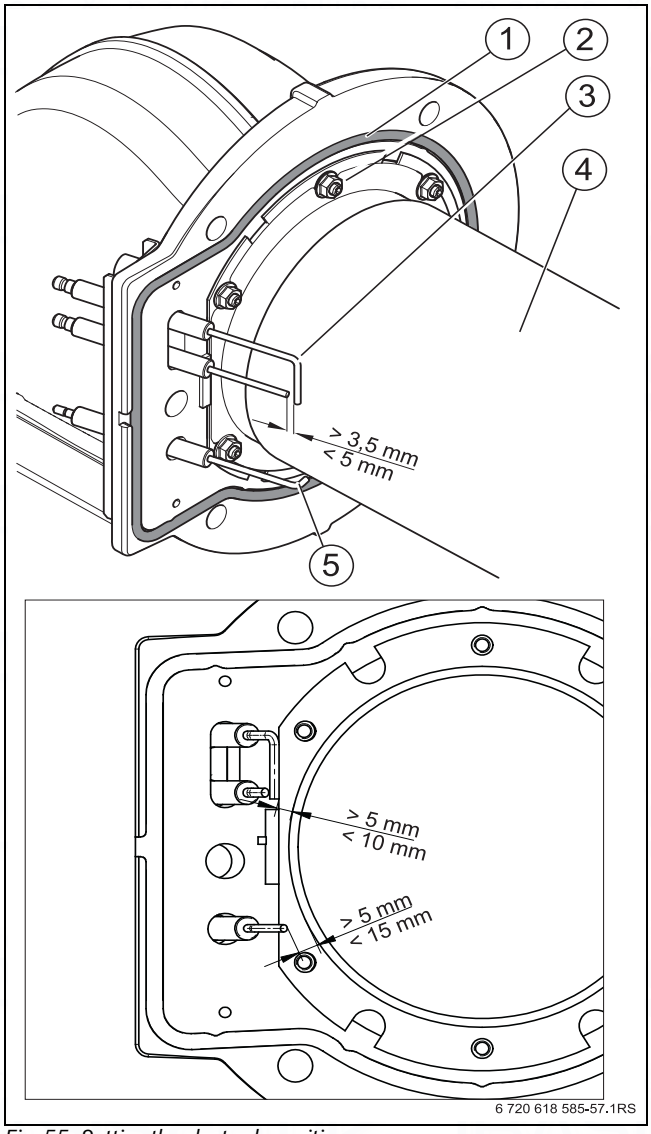

Fig. 55 Setting the electrode position

[1] Gasket (O-ring), mixture manifold
[2] Fixing screws, burner rod
[3] Ignition electrode
[4] Burner rod
[5] Ionisation electrode

- ▶ Replace the electrode block together with a new gasket if actual values deviate from the specified parameters.
- ▶ If deposits are found on the electrodes, replace the electrode block together with a new gasket or sand down the electrodes.

> We recommend the replacement of the electrode block as part of the annual service.

9.8 Replacing components

9.8.1 Removing the gas valve

- ▶ Shut down the heating system (→ Chapter 7, page 21).
- ▶ Close the main gas shut-off valve and secure against unintentional re-opening.
- ▶ Pull compensation hose [1] from the ventilation air collector.
- ▶ Undo the ventilation air hose between the ventilation air collector and adaptor at the hose clip.
- ▶ Remove the ventilation air hose together with the connector from the ventilation air collector.
- ▶ Undo cables [3] from the gas valve.
- ▶ Undo 4 screws [2] from the gas valve flange.

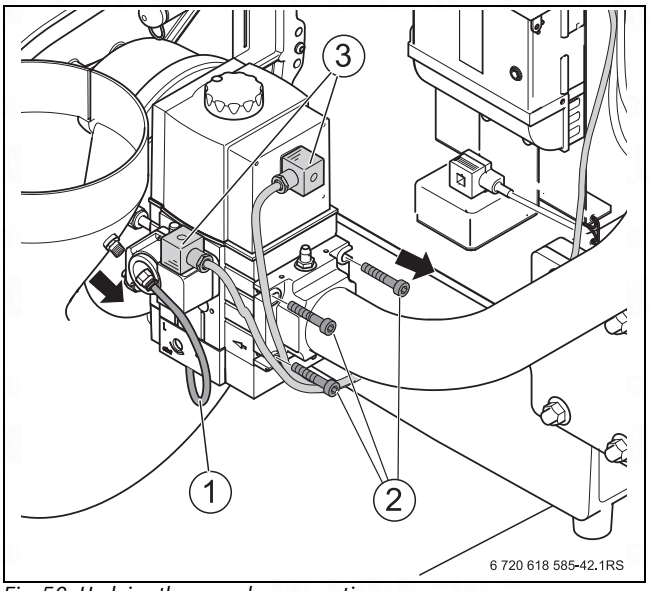

Fig. 56 Undoing the gas valve connections

[1] Compensation hose
[2] Screws
[3] Cables

- ▶ Remove 3 nuts [2] from the nozzle plate and remove gas valve [1].

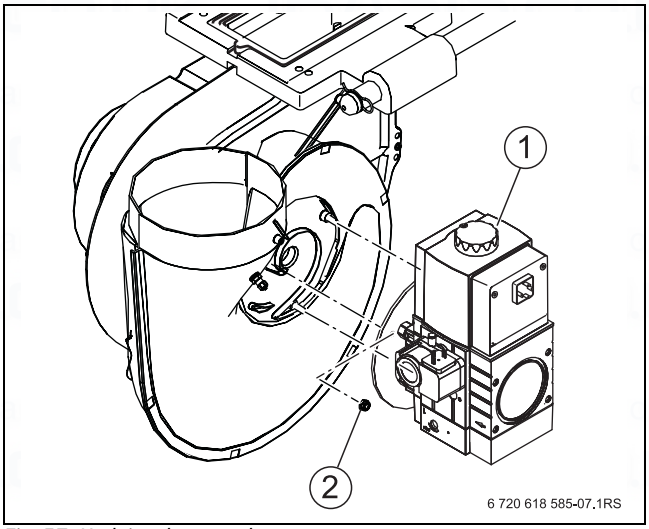

Fig. 57 Undoing the gas valve

[1] Gas train
[2] Nut

9.8.2 Changing the gas filter

- ▶ Undo both screws [4] from filter cover [3] underneath the gas valve.
- ▶ Remove filter cassette [1] and insert a new one.
- ▶ Insert new gasket [2] at the filter cover and refit using both screws.

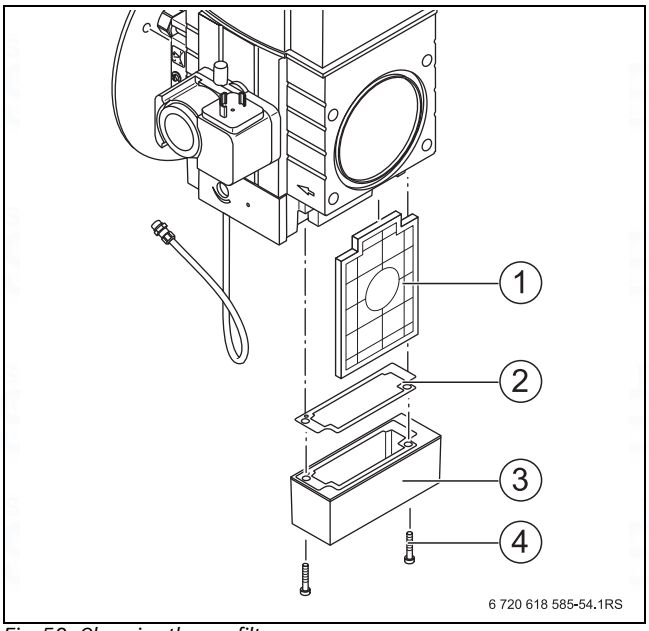

Fig. 58 Changing the gas filter

[1] Filter cassette
[2] Seal
[3] Filter cover
[4] Screw

9.8.3 Removing the fan

- ▶ Undo the electric plug-in connections at the fan.
- ▶ Pull out the burner (→ Chapter 9.6.1, page 33).
- ▶ Remove the gas valve (→ Chapter 9.8.1, page 36).
- ▶ Undo clip [3] at the ventilation air collector and pull off front semi-shell [4] from its studs.
- ▶ Also remove impeller [2] and fan inlet nozzle [1] from the studs.

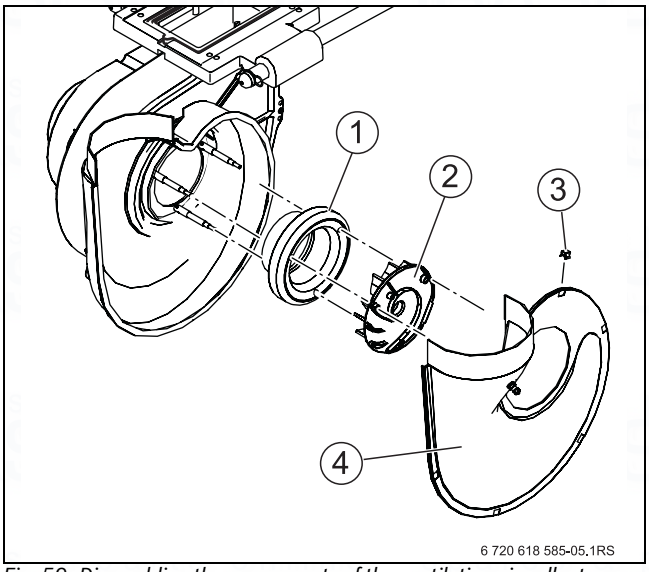

Fig. 59 Dissembling the components of the ventilation air collector

[1] Fan inlet nozzle
[2] Impeller
[3] Clamp
[4] Front semi-shell

- ▶ Remove rear semi-shell [1].

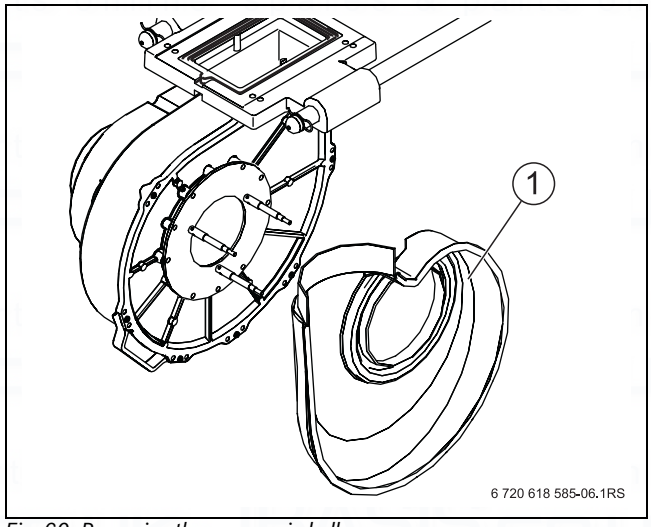

Fig. 60 Removing the rear semi-shell

[1] Semi-shell

- ▶ Remove mounting plate [1] from the fan.
- ▶ Undo both rear screws [3] (joint between carriage [2] and fan [5] (do not remove).
- ▶ Support the fan and remove both front screws [4].
- ▶ Pull out the fan towards the front.

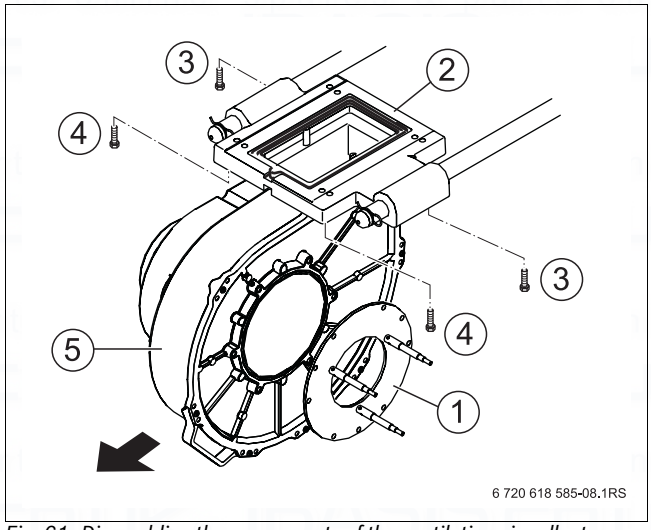

Fig. 61 Dissembling the components of the ventilation air collector

[1] Assembly plate
[2] Carriage
[3] Rear screw
[4] Front screw
[5] Fan

9.9 Refitting detached parts

- ▶ Reassemble all boiler parts that were removed for inspection and maintenance purposes in the reverse order.
- ▶ Check all gaskets for wear and damage.

Observe the specified replacement interval for gaskets (→ Chapter 9.13, page 39).

- ▶ Replace gaskets if required.

9.9.1 Fitting the fan

- ▶ Push the fan underneath the screws undone on the underside of the carriage. Lower the fan slightly at the front and insert a new gasket [1] into the groove in the carriage.
- ▶ Secure the fan to the carriage using all 4 screws.

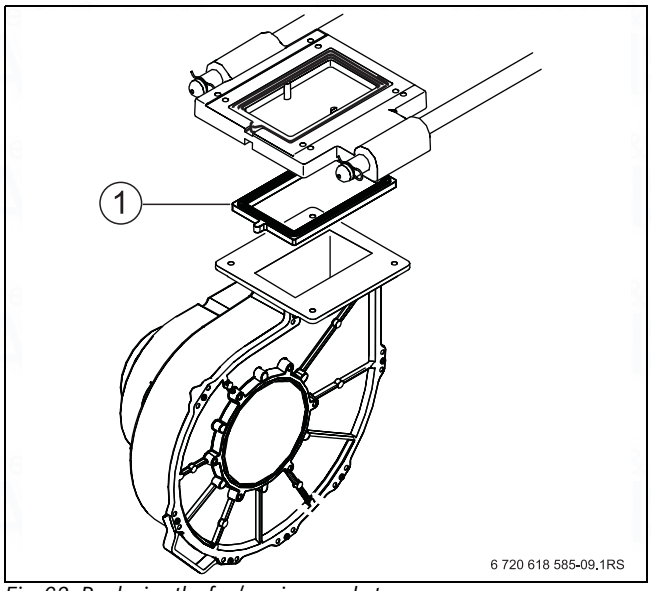

Fig. 62 Replacing the fan/carriage gaskets

- ▶ After the fan installation, check the gasket for correct seating.

9.9.2 Fitting the ventilation air collector and the gas valve

- ▶ Secure the mounting plate on the fan. Position the rear semi-shell of the ventilation air collector on the studs of the mounting plate and push the fan inlet nozzle over the studs towards the semi-shell, then secure it.
- ▶ Push the impeller onto the studs, so that the marking points upwards.

When fitting the impeller ensure that the marking points upwards.

- ▶ Secure the front semi-shell with clips to the ventilation air collector.
- ▶ Push the compensation hose onto the ventilation air collector.
- ▶ Secure the gas valve with the nozzle plate on the studs.

9.9.3 Fitting the burner

DANGER: Risk to life through escaping flue gas!
- ▶ During installation, look out for faulty gaskets and ensure they are seated correctly. Replace faulty gaskets.
- ▶ Observe the order of assembly described.

- ▶ Insert the gasket on the top of the carriage.
- ▶ Insert the O-ring into the mixture manifold.
- ▶ Insert the burner together with the mixture manifold into the boiler combustion chamber.
- ▶ Push the carriage towards the boiler block.
- ▶ Secure the mixture manifold on the carriage using 4 screws.
- ▶ Secure the mixture manifold at the front section of the boiler using 4 nuts.

There is an indicator window on the top of the flange so you can check from the outside that a gasket has been inserted.

- ▶ Plug all necessary cables into the gas valve and fan, and the plug-in connections into the electrode block. During this step, route ionisation cable [1] as shown in 63 (below the guide rod).

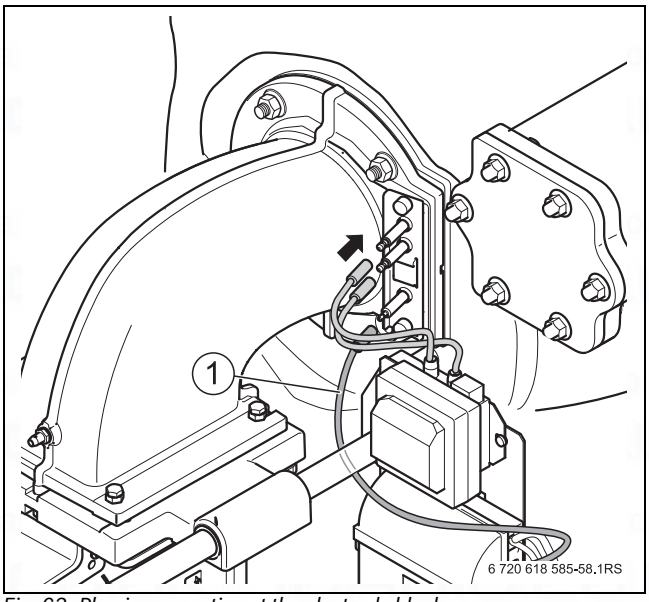

Fig. 63 Plug-in connection at the electrode block

9.9.4 Fitting the gas line to the gas valve

- ▶ Insert a new O-ring into the gas valve flange.
- ▶ Secure the gas valve to the fan using 4 screws.
- ▶ Secure the flange of the gas connection again to the gas valve using 4 screws.

9.9.5 Fitting the ventilation air unit

NOTICE: System damage through contaminated air.
- ▶ Prior to fitting the ventilation air hose, check the ventilation air grille (integrated into the lower hose adaptor) for contamination and clean if required.

- ▶ Push the ventilation air hose together with the connector onto the ventilation air collector and secure with a hose clip at the upper adaptor.

9.10 Checking for leaks during operation

NOTICE: Risk of system damage due to short circuit!
- ▶ Cover the fan and other points at risk prior to checking for leaks.
- ▶ Never apply leak detector spray to cable entries, plugs or electrical cables/leads. Do not allow it to drip onto them either.

- ▶ Start the boiler and check all gaskets for leaks under full load using a leak detection agent.
- ▶ For further leak checks of the entire gas train, see Chapter 7.15, page 27.

9.11 Checking the ionisation current

To ensure trouble-free operation, the ionisation current at partial and full load (and burning flame) should be at least 15 µA.

The (flame) ionisation current can be read off on the RC35 programming unit under "SERVICE MENU DIAGNOSIS/MONITOR VALUE" (→ Chapter 7.14.1, page 27).

9.12 Completing inspection and maintenance

9.12.1 Removing meters

Observe the instructions for the BC10 and RC35.

9.12.2 Fitting sections of the casing

- ▶ Fit all casing sections (→ Fig. 37, page 27).

9.12.3 Confirming inspection and maintenance

- ▶ Sign the inspection and maintenance report in this manual (→ Chapter 9.14, page 40).

9.13 Replacing the gaskets subject to time in use

The following gaskets must be replaced after expiry of the specified time in use.

Seal	Replacement after x years in use for type of use:	
	Standard [1]	Industrial [2]
Mixture manifold gasket (O-ring)	after 5 years	after 3 years
Cleaning cover gasket (on the heat exchanger)		

Tab. 16 Replacement according to time in use

1) Applicable to all conventional uses of the boiler as a gas condensing boiler for DHW and central heating.

2) Applicable to use of the boiler for industrial heat generation with constantly high flow temperatures and burner loads, for example.

DANGER: Risk to life through escaping gases!
- ▶ Always replace the electrode block gasket when replacing electrodes.
- ▶ During every service, replace the gasket at the gas connection flange of the gas valve.
- ▶ Generally, replace damaged gaskets or ones that appear aged.

We recommend the replacement of the electrode block as part of the annual service.

9.14 Inspection and maintenance reports

The inspection and maintenance reports are also designed as templates and may be photocopied.

▶ Sign and date the completed inspection work.

Inspection work		page	Full load	Partial load	Full load	Partial load
1.	Check the general condition of the heating system (visual inspection and function check).		☐		☐	
2.	Check system areas that are in contact with gas or water for the following:					
	- Internal leaks		☐		☐	
	- Visible signs of corrosion		☐		☐	
	- Signs of ageing		☐		☐	
3.	Check the concentration of antifreeze/additives in the heating water (observe manufacturer's instructions and the details in the log).		Concentration:_____%		Concentration:_____%	
4.	Checking the heating system water pressure.	32	☐		☐	
	- Pre-charge pressure of the expansion vessel (→ expansion vessel installation instructions).					
	- Operating pressure	32				
5.	Check the burner and heat exchanger for contamination; shut down the heating system for this step.					
6.	Check the siphon and condensate pan; shut down the heating system for this step.					
7.	Check the electrode block; shut down the heating system for this step.	36				
8.	Check the gas supply pressure.	24				
9.	Check the ventilation and extract air apertures, the flue connection and flue gas routing.	23	☐		☐	
10.	Record actual values:	26				
	- Feed pressure		_____Pa	_____Pa	_____Pa	_____Pa
	- Gross flue gas temperature t_A		_____°C	_____°C	_____°C	_____°C
	- Air temperature t_L		_____°C	_____°C	_____°C	_____°C
	- Net flue gas temperature t_A - t_L		_____°C	_____°C	_____°C	_____°C
	- Carbon dioxide content (CO_2) or oxygen content (O_2)		_____%	_____%	_____%	_____%
	- CO value, free of air		_____ppm	_____ppm	_____ppm	_____ppm
11.	Carry out function checks:	27				
	- Checking the ionisation current.		_____µA	_____µA	_____µA	_____µA
12.	Check for leaks during operation.	27	☐		☐	
13.	Check that the control unit is set correctly for the prevailing conditions (see control unit documentation).	–	☐		☐	
14.	Final checking of inspection work.	–	☐		☐	
	Confirm professional inspection Company stamp/date/signature					

Tab. 17

If any condition requiring maintenance is identified in the course of the inspection, that work must be carried out as required.

The specified replacement of gaskets is described in Chapter 9.13 (→ page 39).

	Full load	Partial load	Full load	Partial load	Full load	Partial load	Full load	Partial load
1.	☐		☐		☐		☐	
2.								
	☐		☐		☐		☐	
	☐		☐		☐		☐	
	☐		☐		☐		☐	
3.	Concentration:_____%		Concentration:_____%		Concentration:_____%		Concentration:_____%	
4.	☐		☐		☐		☐	
5.								
6.								
7.								
8.								
9.	☐		☐		☐		☐	
10.								
	_____Pa	_____Pa	_____Pa	_____Pa	_____Pa	_____Pa	_____Pa	_____Pa
	_____°C	_____°C	_____°C	_____°C	_____°C	_____°C	_____°C	_____°C
	_____°C	_____°C	_____°C	_____°C	_____°C	_____°C	_____°C	_____°C
	_____°C	_____°C	_____°C	_____°C	_____°C	_____°C	_____°C	_____°C
	_____%	_____%	_____%	_____%	_____%	_____%	_____%	_____%
	_____ppm	_____ppm	_____ppm	_____ppm	_____ppm	_____ppm	_____ppm	_____ppm
11.								
	_____µA	_____µA	_____µA	_____µA	_____µA	_____µA	_____µA	_____µA
12.	☐		☐		☐		☐	
13.	☐		☐		☐		☐	
14.	☐		☐		☐		☐	

Tab. 18

	Demand-dependent maintenance	Page	Date: _____	Date: _____
1.	Shutting down the heating system.	29	☐	☐
2.	Cleaning the burner and heat exchanger.	32	☐	☐
3.	Replace gaskets on the cleaning cover of the heat exchanger.	34	☐	☐
4.	Replace the electrode block.	36	☐	☐
5.	Cleaning the siphon.	36	☐	☐
6.	Cleaning the condensate pan.	36	☐	☐
7.	Replace the mixture manifold gasket (O-ring).	36	☐	☐
8.	Carry out a function check.		☐	☐
	Confirm professional service. Company stamp/signature			

Tab. 19

	Date: _____	Date: _____	Date: _____	Date: _____	Date: _____
1.	☐	☐	☐	☐	☐
2.	☐	☐	☐	☐	☐
3.	☐	☐	☐	☐	☐
4.	☐	☐	☐	☐	☐
5.	☐	☐	☐	☐	☐
6.	☐	☐	☐	☐	☐
7.	☐	☐	☐	☐	☐
8.	☐	☐	☐	☐	☐
	Company stamp/ signature	Company stamp/ signature	Company stamp/ signature	Company stamp/ signature	Company stamp/signature

Tab. 20

10 Troubleshooting

10.1 Recognising the operating state and resetting faults

If a fault has developed, the fault code flashes on the control unit display. The programming unit shows faults as plain text messages.

NOTICE: System damage due to frost.
The heating system can freeze up if it has been switched off through a fault shutdown.

- ▶ Rectify the fault immediately and restart the heating system.
- ▶ Where that is not possible, drain the heating and DHW pipework at the lowest point.

A fault has developed if the display flashes and indicates something other than the current boiler water temperature or an operating message.

Example: "6A" = the burner will not start

For an overview of the operating and fault codes, along with possible causes and remedial measures, see the control unit→ documentation and the following Chapter 10.2 (→ page 44).

▶ Hold down "Reset" for 5 seconds to clear the fault.

A reset is only possible if a fault message is flashing. The display shows "rE" whilst the reset is being performed.

If the display then reverts to a normal operating message, the fault has been cleared. Should the fault recur, repeat the reset two or three times.

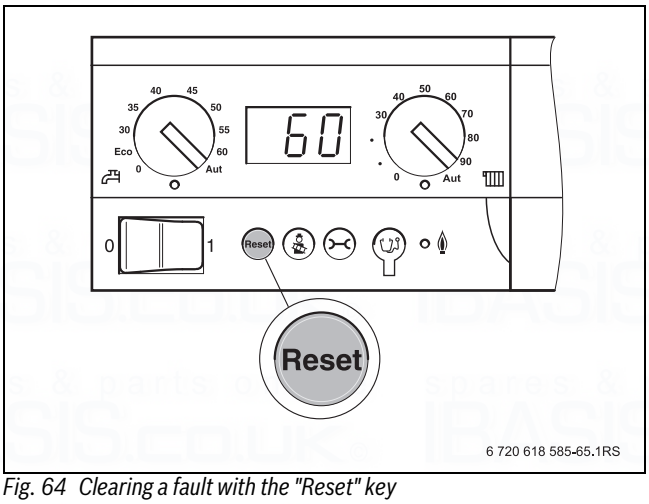

Fig. 64 Clearing a fault with the "Reset" key

10.2 Operating and fault displays

10.2.1 Operating messages

Display code	Sub-code	Cause	Description	Test procedure/ cause	Correction
2P	564	Temperature rise at the boiler sensor too rapid (> 70 K/min).	Heat exchanger protection due to excessively fast heat-up speed.	No or insufficient heat transfer (e.g. thermostatic valves or mixers closed).	Ensure adequate heat transfer.
				Inadequate boiler flow rate.	Install adequately sized pumps.
				Pump does not work.	Check whether the pump is being switched. Replace the pump if required.
				Deposits on the water side of the boiler (dirt from the heating system, scaling).	Flush/clean the boiler block on the heating water side with agents approved for use with aluminium.
OA	-	Appliance in switching optimisation prog.	A new burner demand occurs within the set switching optimisation time. Appliance in cycle block. The standard switching optimisation time is 10 min.	Check output setting at the BC10 basic controller.	Match the boiler output to the required heat demand of the building.
				Check the control setting in the RC35 control unit.	Match the control setting to the system conditions.
OH	-	The appliance is in standby mode; there is no heat demand.	The boiler is ready to operate; there is no heat demand from the heating circuit.	-	-
OY	-	The current boiler water temperature is higher than the set boiler water temperature.	The current boiler water temperature is higher than the set boiler water temperature. The boiler shuts down.	-	-
OP	-	Waiting for the fan to ramp up.	The ramp-up needs to be detected for the sequence to be able to proceed.	-	-
OE	-	The appliance is in standby mode, there is an active heat demand, but an excess of energy is being supplied.	The current system heat demand is lower than that which the minimum modulation level of the burner supplies.	-	-
OU	-	Start of the program sequence to start the burner.	-	-	-
OC	-	Burner start begins.	-	-	-
OL	-	Opening the gas train.	-	-	-
OF	-	Insufficient boiler flow rate.	Temperature differential between the flow and return > 15 K. Temperature differential between flow and safety temperature sensor > 15K.	Check the flow temperature on the BC10, check the return temperature with RC35 or the service key, measure the resistance of the boiler sensor (high limit safety cut-out (STB)) and compare with the curve.	Adjust the setting of the boiler circuit pump. Check the surface temperature of the cast section that is equipped with the safety temperature sensor using a thermometer. Check whether a cast section is blocked with dirt.

Tab. 21 Operating codes

10.2.2 Fault displays

Type [1)]	Display code	Fault code	Cause	Description	Test procedure/cause	Correction
B	2E	207	Water pressure < 0.6 bar.	-	Check whether the heating system pressure is at least 1 bar.	Correct the operating pressure.
V	2U	533	Incorrect hydraulic connection of boiler or pump.	The boiler control unit has recognised an incorrect flow on the water side.	Check whether the boiler flow and return have been accidentally swapped. Check pump for correct flow direction.	Connect flow and return correctly. Ensure correct pump flow direction.
B	2U	565	Excessive differential between the flow and return temperature. > 40 K	Heat exchanger protection due to excessive temperature spread.	Problems with the hydraulics.	Check the system hydraulics.
V	2U	575	Intelligent high limit safety cut-out in flow (ISTB).	The actual boiler flow temperature reaches the intelligent high limit safety temperature for the flow of 140 °C, and a flame current is detected or the solenoid valves are open.	Check the flow rate on the water side.	Ensure adequate flow rate. Replace boiler sensor/high limit safety cut-out (STB). Replace ignition/monitoring electrode.
V	3C	537	No speed.	The SAFe receives no speed feedback, although the fan is supposed to be running.	Check cabling between the SAFe and the fan for contact separation, breaks and damage. Check plug-in connection at the SAFe and the fan.	Make the contacts correctly. Replace cable if required. If power is available (no fan start), replace fan.
V	3C	538	Fan speed too low.	The detected speed is lower than the specified speed.	Fan contaminated.	Clean fan if required.
					Fan defective.	Replace fan.
V	3C	540	Excessively high fan speed.	The detected speed is higher than the specified speed.	Check PWM signal/SAFe cabling for contact separation, breaks or damage. Check plug-in connections for damage.	Make the contacts correctly. Replace cable if required. Replace fan.
V	4A	520	Intelligent high limit safety cut-out in flow.	The flow temperature has reached a value of 100 °C.	The temperature rise is monitored by the boiler sensor. Consequently the burner is switched off in good time, making an occurrence of this fault message under normal circumstances unlikely. Unfavourable hydraulics in two-boiler systems: boilers influence each other, e.g. via the return or flow.	Check hydraulics.

Tab. 22 Fault displays
1) V = locking; B = blocking

Type [1]	Display code	Fault code	Cause	Description	Test procedure/cause	Correction
V	4U	521	Excessive sensor differential at the boiler sensor between temperature sensors 1 and 2.	Excessive temperature differential between temperature sensors 1 and 2 (deviation > 5 K/2s).	Check that the "Reset" button illuminates on the SAFe.	Press "Reset" on the SAFe.
					Check that the check valve on the cylinder primary pump is closed.	Close the check valve if it is still open.
					Check whether the flow and return have been connected correctly.	If flow and return have been swapped, connect flow and return correctly.
					Check whether the plug-in connection on the boiler sensor and on the SAFe are contaminated or damaged.	If required, clean or replace the plug-in connections.
					Check the resistances at the boiler sensor according to table or visually inspect the plug at the temperature sensor.	Replace the boiler sensor if the sensor values deviate from the stated values, or if the plug is faulty.
					Check the voltage values on the boiler sensor according to table.	Replace the SAFe if there are deviations.
V	4U	522	Boiler sensor short circuit between temperature sensors 1 and 2.	A temperature sensor fault was detected in test mode.	Check the sensor lead. Check the plug-in connection.	Replace in case of damage. Clean or replace if contaminated. Refit plug it is found to be loose.
					Check sensor values according to table.	Replace the temperature sensor in case of deviations.
					Check the voltage at the temperature sensor according to table.	Replace the SAFe in case of deviations.
V	4Y	523	Boiler temperature sensor lead break.	Temperature too low at the boiler temperature sensor (< -5 °C)	Check the sensor lead.	Replace in case of damage.
					Check the plug-in connection.	Clean or replace if contaminated. Replace in case of damage. Refit plug it is found to be loose.
					Check sensor values according to table.	Replace the temperature sensor in case of deviations.
					Check the voltage at the temperature sensor according to table (SAFe documentation).	Replace the SAFe in case of deviations.
V	4U	524	Boiler sensor short circuit.	The boiler sensor detected an excessively high temperature (> 130 °C).	Check the sensor lead.	Replace in case of damage.
					Check the plug-in connection.	Clean or replace if contaminated. Replace in case of damage. Refit plug it is found to be loose.
					Check sensor values according to table.	Replace the temperature sensor in case of deviations.
					Check the voltage at the temperature sensor according to table (SAFe documentation).	Replace the SAFe in case of deviations.
V	4A	575	Intelligent high limit safety cut-out responds.	The boiler flow temperature has reached its maximum permissible level.	Hi limit safety cut-out has responded.	Check gas train. (Does the flame extinguish after a control shutdown?)
B	5L	542	Incomplete communication with the SAFe.	The MC10 generates this fault if not all required data is supplied by the SAFe.	Check the cabling between the SAFe and the MC10.	Replace the SAFe if the connections are OK.

Tab. 22 Fault displays
1) V = locking; B = blocking

Type [1)]	Display code	Fault code	Cause	Description	Test procedure/cause	Correction
B	5L	543	No communication with the SAFe.	The MC10 does not receive data from the SAFe.	Check whether the cable plugs (BUS cable and power cable) between SAFe and MC10 are correctly plugged in.	Refit plug it is found to be loose.
					Check in the MC10 at terminals "Mains SAFe" whether 230 V are present.	Replace the MC10 if there are not 230 V.
					Check whether the cables (BUS cable and power cable) between the SAFe and the MC10 are damaged.	Replace cable.
					Check whether the green indicator illuminates on the SAFe.	Replace the SAFe if the indicator does not illuminate.
					Separate the BUS cable between SAFe and MC10 and check whether the boiler enters emergency mode (runs at 60 °C boiler water temperature).	Replace the SAFe if the boiler does not start.
					Make replacements to check whether it is the SAFe or the MC10 that is faulty.	Replace the SAFe or MC10.
					If the SAFe remains dark, wait a short time as the appliance will not start up if the SAFe is cold.	Wait up to 30 minutes and check whether the green indicator on the SAFe illuminates again. Replace the SAFe if that is not the case.
B	6L	515	Ionisation signal failure during operation.	Ionisation signal failure during burner operation.	-	None; the SAFe will try a restart.
B	6L	514	Flame torn off within the flame stabilisation time.	No flame signal was detected within the stabilisation time.	-	None; the SAFe will try a restart.
V	6C	576	Ionisation current within the pre-purge time > 0.9 µA.	A flame signal was detected during the pre-purge time.	Check the ionisation electrode. Ensure that the metal fibres of the burner gauze have no contact with the electrodes. Check gas train function.	Check electrode gap on the ionisation electrode. Replace ionisation electrode. Replace gas train.

Tab. 22 Fault displays
1) V = locking; B = blocking

Type [1)]	Display code	Fault code	Cause	Description	Test procedure/cause	Correction
B	6A	577	No flame within the safety time.	Ionisation current within the safety time < 1.1 µA.	Gas supply pressure too low.	Notify gas supplier if the supply pressure is too low.
					The gas governor is not adjusted to the required gas volume.	Install gas governor that is adjusted to the required gas volume or, if necessary, notify gas supplier.
					Inadequately sized gas line cross-sections (min. cross-section of the gas supply pipe).	Install adequately sized gas lines.
					Air in the gas line.	Purge the gas line.
					Excessively high flue system backpressure through unfavourable layout (too many diversions; cross-section inadequate or too long; horizontal sections too long).	Size and route the flue system correctly.
					Ignition/ionisation electrode contaminated.	Clean or replace ignition/ ionisation electrode.
					Check cabling between the SAFe and the ionisation electrode for contact separation, breaks and damage.	Make the contacts correctly. Replace cable if required.
					Check electrode gaps and ignition/ionisation electrode for damage.	Align burner rod or electrode. Replace faulty electrode.
					Check cabling between the ignition transformer and ignition electrode for contact separation (on electrode and transformer), breaks and damage.	Make the contacts correctly. Replace cable if required.
					SAFe burner control unit faulty.	Replace the SAFe.
					Ignition transformer faulty (no or delayed ignition spark, "hard start").	Replace the ignition transformer.
V	6L	561	"Power up" 5 times (power interruption during burner start).	The burner control unit was switched off 5 times during the burner start.	Check the 230 V power supply to the control unit.	Reset burner control unit. Remedy problem with the power supply.
B	7A	550	Undervoltage.	The mains voltage is too low.	The power supply must not fall below 195 V.	Ensure the correct power supply.
B	7A	551	Voltage interruption.	There has been a brief power failure.	Check the power cable for possible loose contacts. Check the wiring and correct contacts of the mains plug at the MC10 or SAFe.	Remedy any contact problems.
B	7P	549	The safety chain has opened.	The continuity of the external components tied into the MC10 safety chain has been interrupted.	Check the continuity of the components.	If required, replace faulty components.

Tab. 22 Fault displays
1) V = locking; B = blocking

Type [1]	Display code	Fault code	Cause	Description	Test procedure/cause	Correction
B	8L	534	No gas pressure or additional flue gas pressure limiter (pressure > 7.5 bar) has responded.	There is no gas pressure although solenoid valve 1 should have opened. The burner makes three successive attempts at starting, then there is a delay of one hour, before making three more start attempts.	Check that the gas tap is open.	Replace the gas train if required.
					Check whether there is gas pressure.	Check the gas pressure.
					Check whether the flue gas pressure limiter has responded.	Reset the flue gas pressure limiter. Check the flue gas path for blockages.
					Check electrode.	Replace electrode if required.
					Check ignition transformer.	Replace ignition transformer if required.
					Check gas filter for contamination.	Replace gas filter if required.
V	8P	580	Solenoid valve 1 leaking	The valve test system has detected an unacceptably high leakage rate on solenoid valve 1.	Check gas train for contamination. Gas filter fitted.	Replace gas train.
V	8U	581	Solenoid valve 2 leaking	The valve test system has detected an unacceptably high leakage rate on solenoid valve 2.	Check gas train for contamination. Gas filter fitted.	Replace gas train.
V	9Y	500 501 502 503	Internal SAFe relay faulty.	Internal SAFe electronics faulty.	Press "Reset" and wait to see if the fault has been removed.	Replace the SAFe if the fault persists after "Reset" has been pressed.
V	CY	566	Return temperature < -5 °C (interruption)	The control unit receives unrealistic values from the return sensor.	Check cabling between SAFe and return sensor. Check electrical connection of the SAFe cable.	Replace cable if required. Remedy contact problem if required. Replace temperature sensor if required.
					Check resistance values of temperature sensor according to table. Check voltage at the temperature sensor terminals inside the SAFe according to table.	Replace SAFe if resistance values of the temperature sensor are correct, but voltage values are incorrect.
V	CY	567	Return temperature > 130 °C (short circuit)	The control unit receives unrealistic values from the return sensor.	Check cabling between SAFe and return sensor.	Replace cable if required.
					Check electrical connection of the SAFe cable.	Remedy contact problem if required.
					Check resistance values of temperature sensor according to table.	Replace temperature sensor if required.
					Check voltage at the temperature sensor terminals inside the SAFe according to table.	Replace SAFe if resistance values of the temperature sensor are correct, but voltage values are incorrect.
V	CO	568	Water pressure sensor fault (cable break).	Water pressure sensor interruption (voltage > 3.5 V).	Check lead to water pressure sensor. Check water pressure sensor.	Remedy any interruption. Replace water pressure sensor.
V	CO	569	Water pressure sensor fault (short circuit).	Water pressure sensor short circuit (voltage < 0.5 V).	Check lead to water pressure sensor. Check water pressure sensor.	Remedy any short circuit. Replace water pressure sensor.

Tab. 22 Fault displays
1) V = locking; B = blocking

Type [1)]	Display code	Fault code	Cause	Description	Test procedure/cause	Correction
V	CY	573	Flow temperature < -5 °C (interruption)	The control unit receives unrealistic values from the flow temperature sensor.	Check cabling between SAFe and flow temperature sensor.	Replace cable if required.
					Check electrical connection of the SAFe cable.	Remedy contact problem if required.
					Check resistance values of temperature sensor according to table.	Replace temperature sensor if required.
					Check voltage at the temperature sensor terminals inside the SAFe according to table.	Replace SAFe if resistance values of the temperature sensor are correct, but voltage values are incorrect.
V	CY	574	Flow temperature > 130 °C (short circuit)	The control unit receives unrealistic values from the flow temperature sensor.	Check cabling between SAFe and flow temperature sensor.	Replace cable if required.
					Check electrical connection of the SAFe cable.	Remedy contact problem if required.
					Check resistance values of temperature sensor according to table.	Replace temperature sensor if required.
					Check voltage at the temperature sensor terminals inside the SAFe according to table.	Replace SAFe if resistance values of the temperature sensor are correct, but voltage values are incorrect.
V	LP	570	Too many resets via the interface.	Too many resets were carried out via the interface within a certain period. Please note: this fault can only be reset via the button on the SAFe.	Faults have been repeatedly reset but not removed.	Identify the cause for the faults that have resulted in the resets and remove them.
					The BC10 has developed a fault causing constant resets.	BC10 Replace.
					The SAFe has developed a fault.	Replace the SAFe.

Tab. 22 Fault displays
1) V = locking; B = blocking

Type [1]	Display code	Fault code	Cause	Description	Test procedure/cause	Correction
V	LL	571	Too many restarts despite resets.	15 restarts occurred in direct succession. This means that the same problem persisted after the resets. Please note: this fault can only be reset via the button on the SAFe.	Faults have been repeatedly reset but not removed.	Identify the cause for the faults that have resulted in the resets and remove them.
V	EE	601	Flow temperature sensor measurement.	Successive measurements of the flow temperature deviate severely from each other.	Check the boiler sensor lead.	Replace in case of damage. Clean or replace if contaminated.
					Check the plug-in connection.	Refit plug it is found to be loose.
					Check sensor values according to table.	Replace the temperature sensor in case of deviations.
					Check the voltage at the temperature sensor according to table.	Replace the SAFe in case of deviations.
V	EE	612	Return temperature sensor measurement.	Successive measurements of the return temperature deviate severely from each other.	Check the boiler sensor lead.	Replace in case of damage. Clean or replace if contaminated.
					Check the plug-in connection.	Refit plug it is found to be loose.
					Check sensor values according to table.	Replace the temperature sensor in case of deviations.
					Check the voltage at the temperature sensor according to table.	Replace the SAFe in case of deviations.
V	EE	613	Flow temperature sensor reading	Successive measurements of the flow temperature deviate severely from each other.	Check resistance value of the flow temperature sensor.	Replace flow temperature sensor in case of deviations.

Tab. 22 Fault displays
1) V = locking; B = blocking

11 Appendix

11.1 Sensor curves

DANGER: Risk to life from electric shock.
▶ Isolate the heating system before taking any readings.

Always measure the temperatures being compared (room, flow, outside and flue gas temperatures) near the relevant sensor. The curves depict mean values and are subject to tolerances. Measure the resistance at the cable ends.

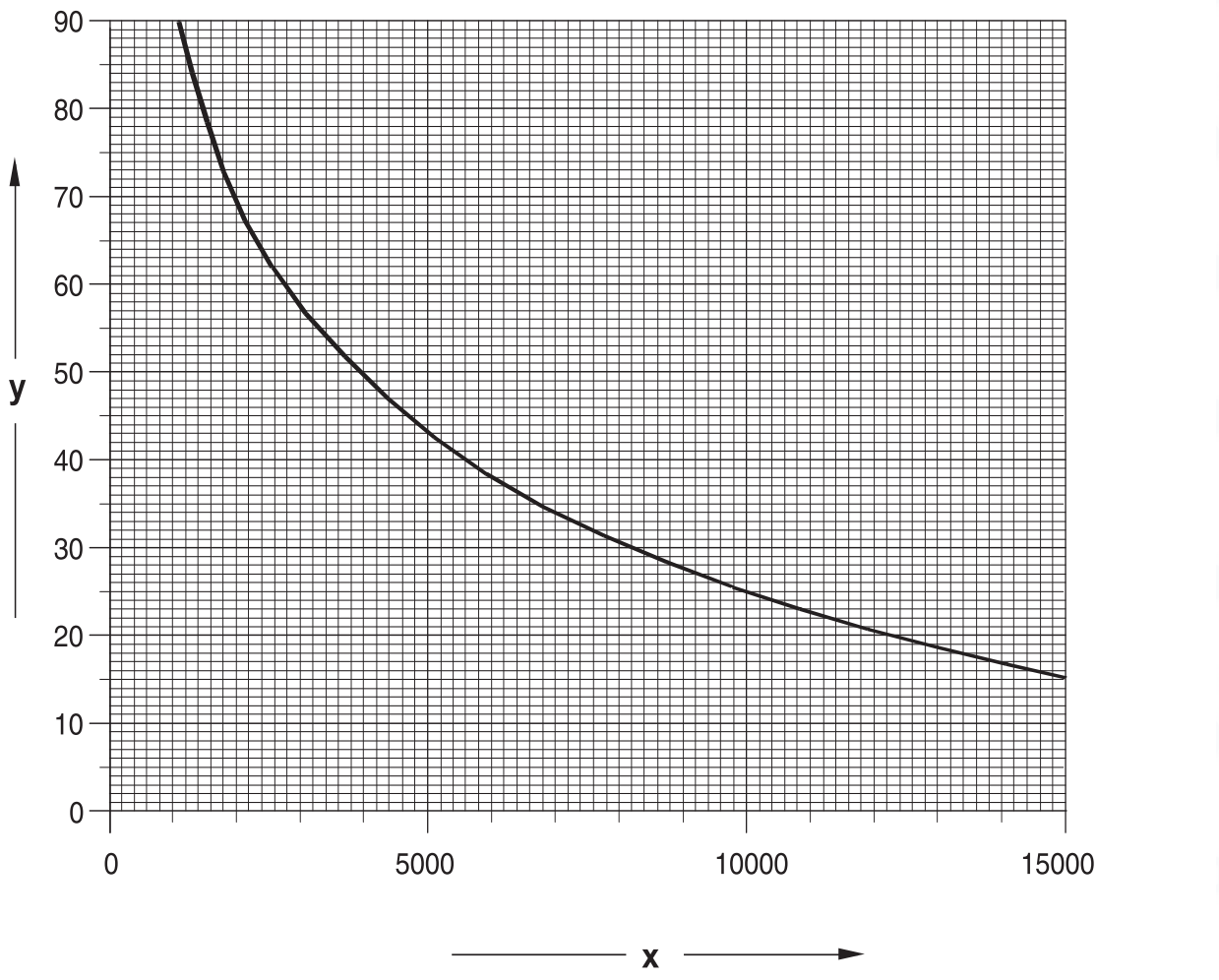

Fig. 65 Sensor curves: boiler sensor

[x] Resistance in Ω
[y] Temperature in °C

Two identical sensors (dual sensors) installed in one sensor casing are used as boiler sensors.

All temperature sensors on the GB402 have the same sensor curve.

11.2 Hydraulic resistance

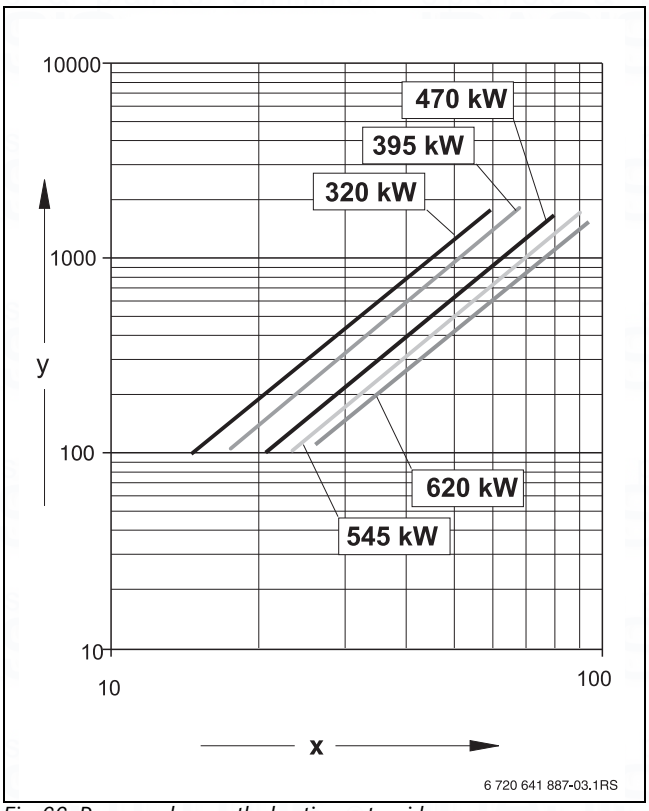

Fig. 66 Pressure drop on the heating water side

[x] Flow rate (m^3/h)
[y] Pressure drop on the heating water side (mbar)

11.3 MC10 connection diagram

NOTICE: System damage through incorrect installation!
- ▶ Provide a permanent power supply (not a safety plug).
- ▶ Ensure the power is connected to the correct phases.
- ▶ Implement the installation, fuse protection, mains isolator, emergency stop switch and protective measures in accordance with local regulations.

DANGER: Risk to life from electric shock!
- ▶ Never use the earth conductor (green/yellow) as a control cable.

NOTICE: Operating faults through power failure!
- ▶ When connecting external components to the MC10 control unit, ensure that the total power consumption of these components does not exceed 5 A.

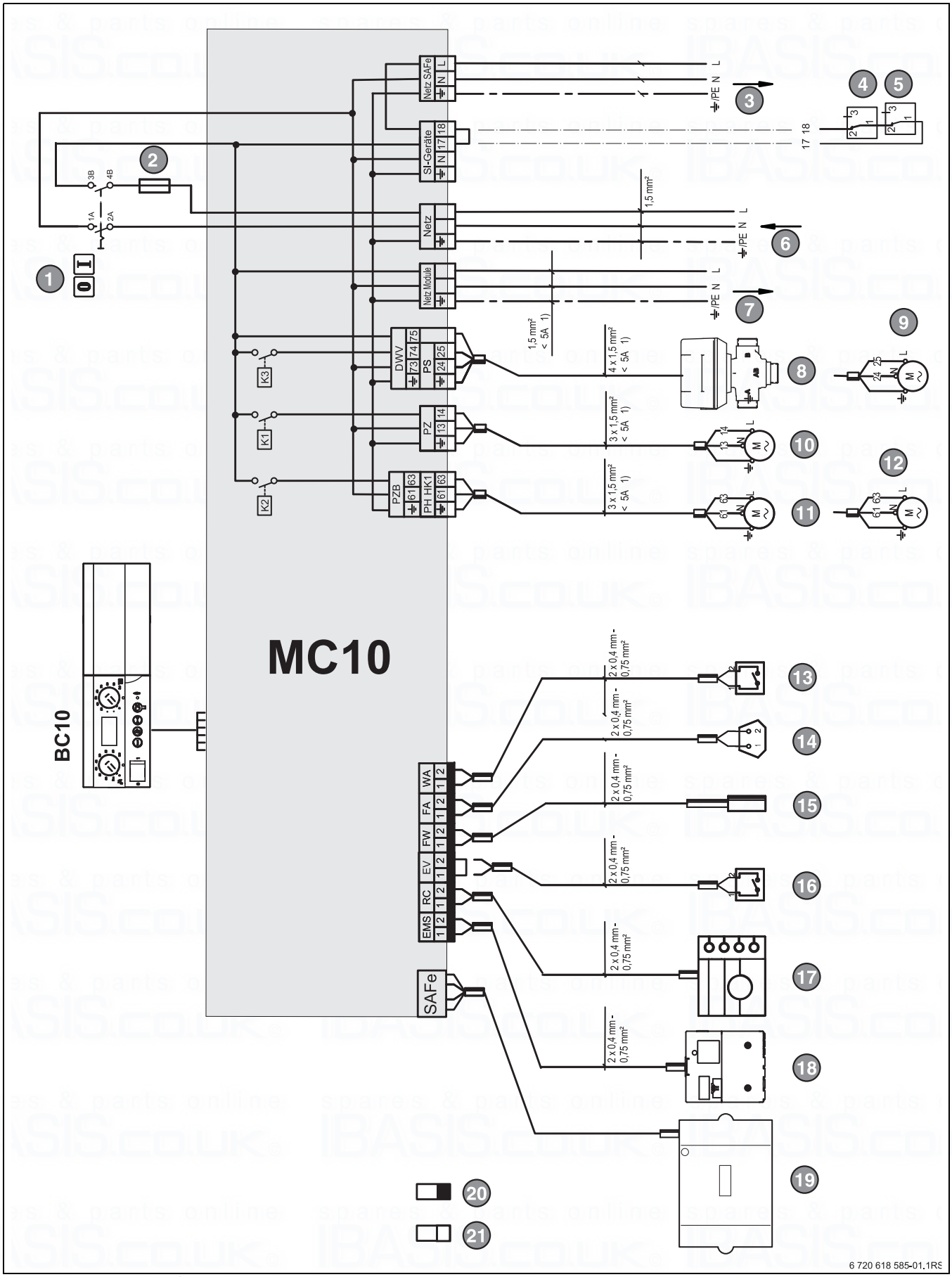

Fig. 67 MC10 connection diagram
1) The total current of all externally connected components must not exceed 5 A.

Key to Fig. 67:

[1] On/Off switch
[2] Fuse, 10 AT
[3] Power supply to SAFe burner control unit, 230 V/50 Hz
[4] Component 1
[5] Component 2
[6] Mains entry
[7] Power supply for function modules, 230 V/50 Hz
[8] DWV 3-way valve
Terminal 73 blue
Terminal 74 black
Terminal 75 brown
[9] PS - Cylinder primary pump
[10] PZ - DHW circulation pump
[11] PZB - Feed pump
[12] PH-HK1 - Heating circuit pump
[13] WA - Heat demand (external)
[14] FA - Outside temperature sensor
[15] FW - DHW temperature sensor
[16] EV - External interlock
(remove the bridge when connected)
[17] RC - Room controller
[18] EMS - BUS cable EMS,
connection to function modules
[19] SAFe - BUS cable SAFe,
connection to the burner control unit
[20] Low voltages
[21] Control voltage 230 V~

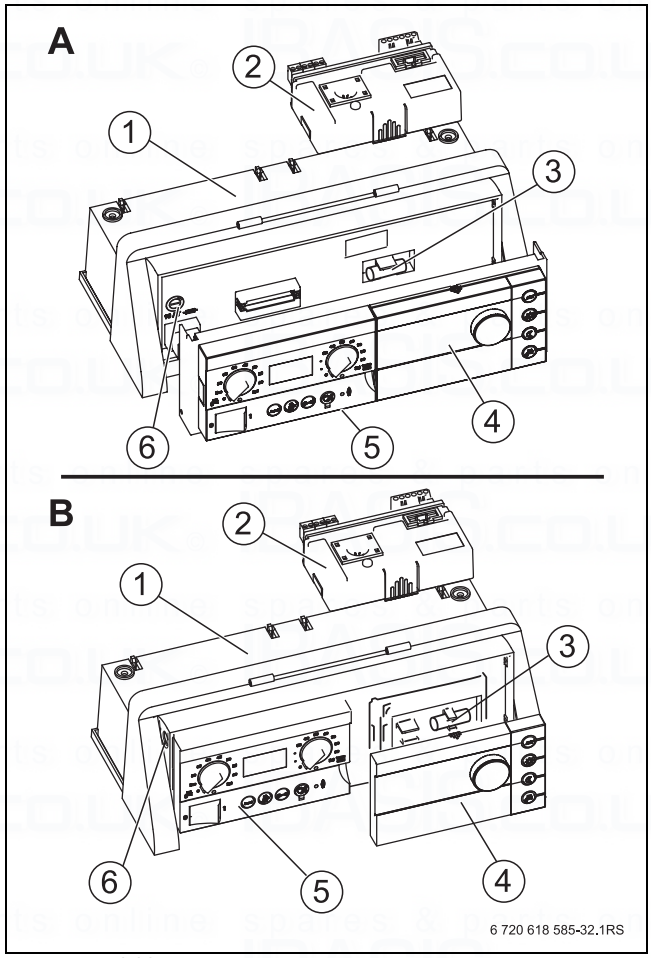

Fig. 68 Available versions BC10

[A] Fuse inside the MC10
[B] Fuse inside the BC10 basic controller
[1] Logamatic MC10
[2] Function modules xM10
[3] Spare fuse 10 AT
[4] RC35 programming unit or dummy cover
[5] Basic controller BC10
[6] Appliance fuse 10 AT

11.4 SAFe connection diagram

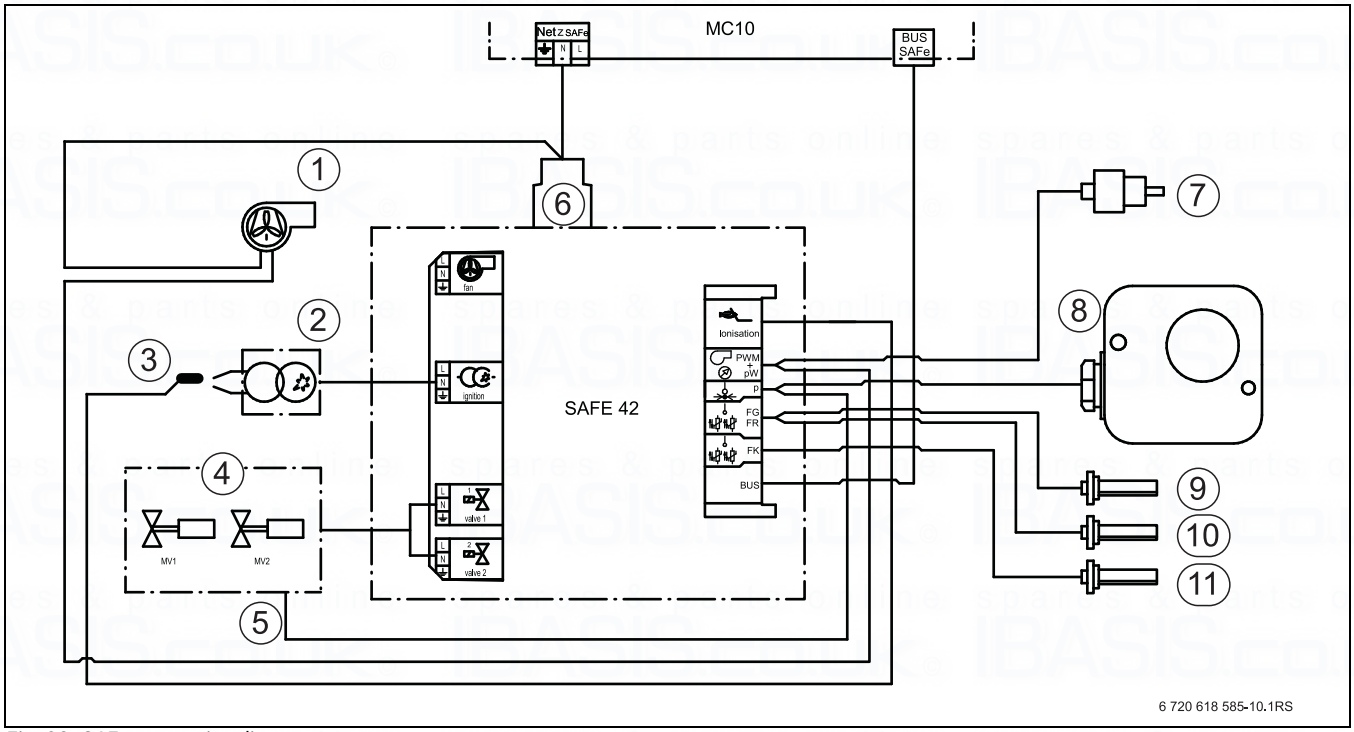

Fig. 69 SAFe connection diagram

[1] Fan (PWM signal)
[2] Ignition transformer
[3] Ionisation
[4] Gas solenoid valve (MV1/MV2)
[5] Gas pressure switch
[6] Mains entry
[7] Water pressure sensor
[8] Flue gas pressure limiter
[9] Flow temperature sensor
[10] Return sensor
[11] Boiler Sensor

Keyword index

B
BC10 control elements 6
Burnout 36

C
Cleaning blade 34
Cleaning cover 33
Current rating 9

D
Dry cleaning 34

E
Electrode 36
Emergencies 29

F
Flow temperature, maximum 9
Frost 12
Fuels 9

G
Gas category 9
Gas tightness test 39
Guidelines 11

I
Installation location 12
Ionisation current 39

L
Levelling 13

O
Operating pressure, maximum 9

P
Packaging 7
Product description 6
Programming unit RC35 39
Providing the fuel supply 20

R
Regulations 11
Removing the burner 33
Reports, inspection and maintenance 40

S
Safety regulations 4
Standards 11

T
Three-way valve 18
Transport 11
Type 9

W
Wall clearances 13
Wet cleaning 35

Notes

spares & parts online IBASIS.CO.UK

Notes

spares & parts online IBASIS.CO.UK

spares & parts online
IBASIS.CO.UK

Buderus

Cotswold Way, Warndon, Worcester WR4 9SW
All Enquiries: 0844 892 3004

www.buderus.co.uk

In the UK and IE, Buderus is a brand name
of Bosch Thermotechnology Ltd.

Buderus