Installation and maintenance instructions

Cast Iron Sectional Boiler for use with Forced Draft Burners.

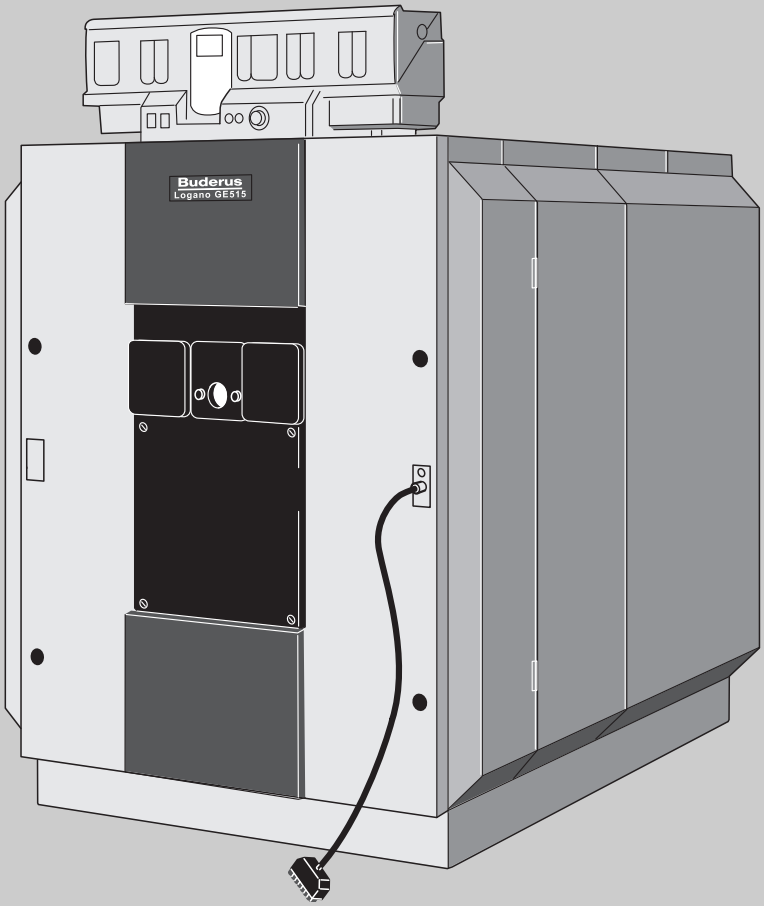

Logano GE515

For contractors

Read carefully before carrying out installation and maintenance.

6 720 643 642 (03/2010) GB/IE/LB

Buderus

spares & parts online IBASIS.CO.UK

1 General information . . . 4

2 Safety . . . 5

2.1 Key to symbols . . . 5

2.2 EU Declaration of Conformity . . . 5

2.3 Correct use . . . 5

2.4 Observe this information . . . 5

2.5 Operating conditions for Buderus G and GE cast iron boilers . . . 7

2.6 Operating conditions GE 515 . . . 7

3 Product description . . . 8

4 Specification . . . 9

5 Standard delivery . . . 11

5.1 Logano GE515 – delivery as ready assembled unit . . . 11

5.2 Logano GE515 – delivery as loose sections . . . 11

6 Transporting the boiler . . . 12

7 Positioning the boiler . . . 13

7.1 Tools and accessories . . . 13

7.2 Recommended wall clearances . . . 15

7.3 Installing the boiler on a plinth or foundation . . . 16

8 Boiler block assembly . . . 17

8.1 Arrangement of boiler sections in boiler block . . . 18

8.2 Joining the boiler block assembly . . . 18

8.3 Positioning the boiler block – supplied as pre-assembled block . . . 25

8.4 Inserting the feed pipe (parts carton) . . . 26

8.5 Seal-in the sensor well . . . 26

8.6 Carrying out a leak test . . . 27

8.7 Boiler water connections . . . 28

8.8 Installing fittings and burner door . . . 30

8.9 Installing the boiler casing . . . 33

9 Boiler flue connection . . . 43

9.1 Fitting the flue pipe sealing collar (accessory) . . . 43

9.2 Fitting the flue gas temperature sensor (accessory) . . . 43

10 Installing the control unit . . . 44

10.1 Installing the control unit . . . 44

10.2 Installation of the temperature sensor set and burner cable . . . 45

11 Installing the burner . . . 47

12 System start-up 48
12.1 Filling the system 48
12.2 Making the system operational 49
12.3 Start up the control unit 49
12.4 Starting the burner 49
12.5 Raising the flue gas temperature 50
12.6 Commissioning report 52
13 System shutdown 53
13.1 Shutting down the heating system via the control unit 53
13.2 Shutting down the boiler in an emergency 53
14 System inspection and maintenance 54
14.1 General information 54
14.2 Why is regular maintenance important? 54
14.3 Clean the boiler with cleaning brushes 55
14.4 Wet-cleaning the boiler 58
14.5 Checking the system water pressure 59
14.6 Inspection and maintenance reports 61
15 Correcting burner faults 63
16 Index 64

1 General information

Observe all standards and guidelines applicable to the installation and operation of this system in your country!

Please observe the information on the boiler rating plate. These are definitive and must be observed.

Operating conditions and time constants		Switzerland	All other countries
Maximum flow temperature	**°C**	110	100–120[1]
Maximum operating pressure	**bar**	6	6
Control thermostat	**s**	40	40
Contactor/limiter	**s**	40	40

Fuels				
Logano GE515	Fuel oil EL	LPG	Natural gas	Bio gas (special operating conditions)
Comments	The Logano GE515 boilers can be operated with the indicated fuels. Select a burner which operates with one of the fuels listed as suitable for the Logano GE515 boiler. The rated output details listed in the "Specification" table are nominal ratings.			
Please note for Switzerland	In reality the stated values will – regarding compliance with the LRV – not always be achieved.			
Please note for Poland	In accordance with PN-91/B-2414 (p.2.5), boilers with a rated output higher than 100 kW should be equipped with a low water indicator (SYR type 933.1) on site.			

[1] *In accordance with national standards and guidelines.*

2 Safety

For your own safety, observe these safety instructions.

2.1 Key to symbols

Warnings

⚠	Warnings in this document are framed and identified by a warning triangle printed against a grey background.

⚠	If there is a danger due to electricity, the exclamation mark in the warning triangle is replaced by a lightning symbol.

Keywords at the start of a warning indicate the type and seriousness of the ensuing risk if measures to prevent the risk are not taken.

- **NOTICE** indicates that material losses may occur.
- **CAUTION** indicates that minor to medium injury may occur.
- **WARNING** indicates possible severe personal injury.
- **DANGER** indicates a risk to life.

Important information

i	Important information where there is no risk to people or property is indicated by the adjacent symbol. It is bordered by lines above and below the text.

Additional symbols

Symbol	Explanation
▶	Action step
→	Cross-reference to other parts of this document or to other documents
•	List/list entry
–	List/list entry (second level)

Tab. 1

2.2 EU Declaration of Conformity

This product conforms in design and operation to the European Directives and the supplementary national requirements. Its conformity is confirmed by the CE designation.

You can call up the Declaration of Conformity for this product on the internet at www.buderus.de/konfo or request a copy from your local Buderus sales office.

2.3 Correct use

The Logano GE515 oil-/gas-fired special boilers have been designed for the heating of heating water. Any oil or gas burner with type approval to EN 267 or EN 676 may be used, provided its operating range matches the boiler specification.

The control units in the 4000 range can be used with this boiler.

2.4 Observe this information

⚠	**DANGER:** Risk to life from the explosion of flammable gases! ▶ Work on gas components must only be carried out by qualified and authorised personnel.

⚠	**DANGER:** Risk of fatal injury from electric shock. ▶ Before carrying out any work on the heating system, disconnect the power supply. For example, activate the emergency stop switch outside the boiler room. ▶ It is not sufficient to switch the system off at the control unit.

NOTICE: System damage through unsatisfactory cleaning and maintenance

- Carry out cleaning and maintenance annually. In the course of this work, check the entire system for correct function.
- Immediately rectify all faults to prevent system damage.

To prevent boiler contamination, we recommend installing a dirt trap in the water system.

NOTICE: System damage caused by deposits, local overheating, noise and corrosion.

- As a basic rule, flush existing systems before connecting the boiler.
- Install a desludging unit in the heating system return to prevent damage to the boiler.

2.5 Operating conditions for Buderus G and GE cast iron boilers

Thermostream technology is a unique feature of Buderus cast iron boilers. Return water is preheated and mixed within the boiler before it comes in contact with the heated surface of the combustion chamber. The Thermostream technology ensures there is an even temperature distribution in the boiler and avoids condensate forming within the combustion chamber. This reduces thermal stress, the main cause of failure of normal cast iron boilers. The benefit of this technology is that if the minimum boiler operating temperature of the boiler is maintained (see table below), there is no need for a conventional shunt pump to be installed, saving the cost of a pump, the electricity it consumes and the breakdown it can cause. The minimum boiler operating temperature as shown in the table below must be reached within 10 minutes and then be maintained while the burner is running.

2.6 Operating conditions GE515

Boiler controls	Minimum flow rate through the boiler	Minimum return water temperature	Minimum boiler operating temperature for oil	Minimum boiler operating temperature for gas	Other conditions
Buderus 4000 with control over all heating circuits	none	none	50 degrees[1)]	50 degrees[1)]	none
Where the Buderus control is not controlling the heating circuits ie External control (BMS) or Constant temperature control with Buderus 4212 with ZM427	none	none	50 degrees[1)]	60 degrees[1)]	none

1) This temperature has to be reached within ten minutes of the burner starting and has to be maintained whilst the burner is firing.

This operating condition can be easily achieved by the controls monitoring the boiler temperature and reducing the flow rate through the boiler until the required temperature is reached. This is then maintained by continuing to control flow based on the boiler temperature. The controls can reduce the flow rate by closing the valves on the mixed heating circuits or by modulating the boiler primary pumps or by closing the motorised butterfly valves or by having a motorised valve in the boiler return on a single boiler installation. The Buderus 4000 series controls can manage this process or it can be done by the BMS.

Failure to ensure that the operating condition is maintained may lead to thermal stress in the boiler and eventual failure of the sections which would be outside the scope of the warranty

3 Product description

The Logano GE515 oil-/gas-fired special boiler is supplied with or without a burner You can obtain undrilled or predrilled burner plates (hole pattern depends on burner) as accessories from Buderus.

The predrilled burner plate is included in the scope of delivery for the Logano GE515 with oil or gas-fired fan-assisted burner.

NOTICE: System damage through incorrect burner.

- Only use burners that meet the technical requirements of the Logano GE515 oil-/gas-fired special boiler (→ Chapter 4 "Specification", page 9).

The main components of the Logano GE515 oil-/gas-fired special boiler are:

- Boiler block (Fig. 1, [3]).
  The boiler block transfers the heat generated by the burner to the heating water.
- Boiler shell (casing, Fig. 1 and Fig. 2, [1]), lagging (Fig. 1, [2]).
  The boiler shell and lagging prevent energy loss.
- Control unit (Fig. 1, [4]).
  The control unit is designed to monitor and control all electrical components of the Logano GE515 oil-/gas-fired special boiler.

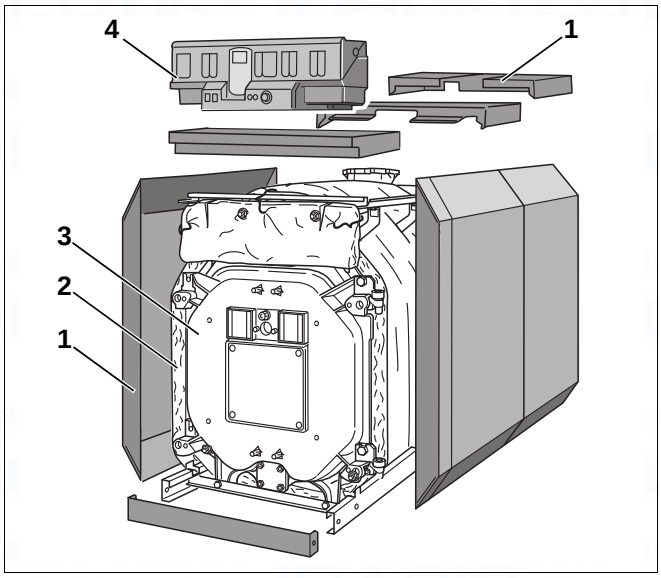

Fig. 1 Logano GE515 oil-/gas-fired special boiler

1 Boiler shell (casing)

2 Thermal insulation

3 boiler block

4 Control unit

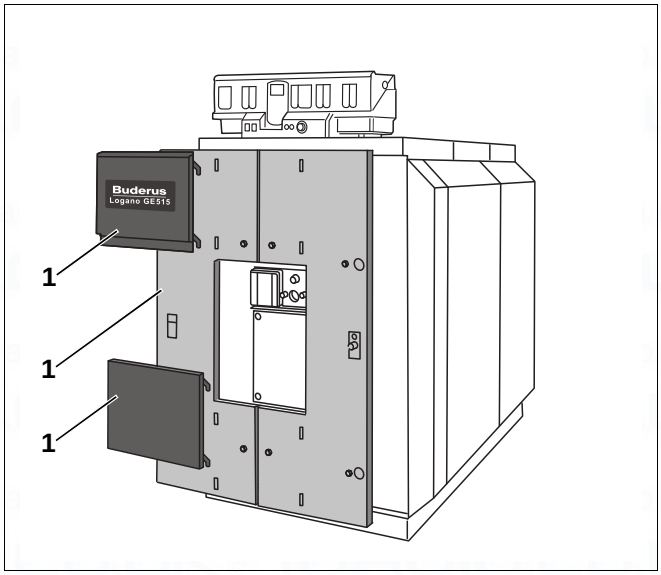

Fig. 2 Logano GE515 oil-/gas-fired special boiler

1 Boiler shell (casing)

4 Specification

The specifications provide information about the output profile of the Logano GE515.

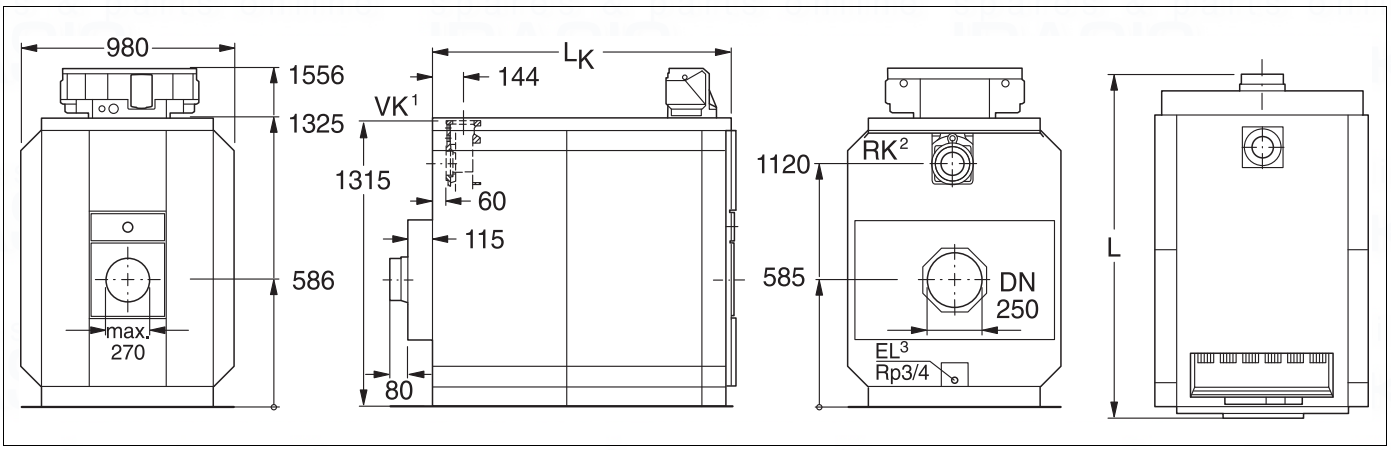

Fig. 3 Specification for Logano GE515 (dimensions in mm)

1 The connecting flange is reduced to DN 100, DN 80 or DN 65 depending on the order.

2 The boiler and system must be filled via a separate spigot in the return line.

3 You can empty, but not fill, the system via the drain valve (EL).

EL = Drain connection (Rp ¾)
L_K = Boiler block length
l = Overall boiler length
RK = Return connection at the boiler
VK = Flow connection at the boiler

Logano GE515							
Boiler size		**240**	**295**	**350**	**400**	**455**	**510**
Boiler sections	**Quantity**	7	8	9	10	11	12
Rated output	**kW**	201–240	241–295	296–350	351–400	401–455	456–510
Combustion output	**kW**	215.6–259.7	257.8–319.0	316.6–377.1	374.6–429.6	428.4–489.2	488.2–547.8
Overall boiler length (L)	**mm**	1580	1750	1920	2090	2260	2430
Length of boiler block (L_K)	**mm**	1360	1530	1700	1870	2040	2210
Fitting clearance, boiler section	**mm**	Width 835/height 1315/depth 170					
Fitting clearance, boiler block	**mm**	Width 835/height 1315/length L_K					
Combustion chamber length	**mm**	1165	1335	1505	1675	1845	2015
Combustion chamber diameter	**mm**	515					
Burner door depth	**mm**	142					
Weight, net[1]	**kg**	1270	1430	1590	1753	1900	2060
Boiler water content	**l**	258	294	330	366	402	438
Gas content	**l**	421	487	551	616	681	745

1 Weight incl. packaging approx. 6–8 % higher.

Logano GE515							
Boiler size		**240**	**295**	**350**	**400**	**455**	**510**
Flue gas temperature[2], partial load (60 %)	**°C**	138	138	140	129	130	140
Flue gas temperature[2], full load	**°C**	164–183	161–183	161–177	157–171	159–172	164–174
Flue gas mass flow rate, oil, partial load (60 %)	**kg/s**	0.0647	0.080	0.094	0.108	0.123	0.137
Flue gas mass flow rate, oil, full load[3]	**kg/s**	0.092–0.110	0.109–0.135	0.134–0.160	0.159–0.182	0.182–0.208	0.207–0.233
Flue gas mass flow rate, gas, partial load (60 %)	**kg/s**	0.065	0.080	0.095	0.108	0.123	0.138
Flue gas mass flow rate, gas, full load[3]	**kg/s**	0.092–0.111	0.110–0.136	0.135–0.161	0.160–0.183	0.183–0.208	0.208–0.233
CO_2 content, oil	**%**	13					
CO_2 content, gas	**%**	10					
Required draught	**Pa**	0					
Required flue gas back pressure	**mbar**	0.5–0.6	1.0–1.4	1.1–1.6	2.1–2.9	2.5–3.3	2.4–3.1
Highest permitted flow temperature[4]	**°C**	120					
Maximum permissible operating pressure	**bar**	6					
Design type approval no., boiler		06-226-640					
CE identification, boiler		CE - 0461 AR 6154					

2 *According to DIN EN 303. The minimum flue gas temperature for the chimney calculation acc. to DIN 4705 is approx. 12 K lower.*

3 *Full load details relate to the upper and lower rated output range.*

4 *Safety limit (high limit safety cut-out). Maximum possible flow temperature = safety limit (STB) – 18 K.*
Example: Safety limit (STB): 100 °C, max. possible flow temperature = 100 - 18 = 82 °C.

5 Standard delivery

The Logano GE515 can be delivered either as a pre-assembled block or in loose sections.

- Check that the packaging is in perfect condition upon receipt.
- Check the delivery for completeness.

5.1 Logano GE515 – delivery as ready assembled unit

Component	Pce	Packaging
Boiler block with burner door and flue gas header	1	Pallet
Assembly components (longitudinal rails and feed pipe)	1	Carton
Cladding Pack A, B, C (according to boiler rating)	1–3	Cartons
Thermal insulation	1	PU bag

5.2 Logano GE515 – delivery as loose sections

Component	Pce	Packaging
Front and rear section as well as burner door	1	Pallet
Central sections – depending on boiler size	1–2	Pallet
Furniture	1	Carton
Flue gas collector	1	Carton
Anchor rods	1	Bundle
Assembly components (longitudinal rails and feed pipe)	1	Carton
Cladding Pack A, B, C (according to boiler rating)	1–3	Cartons
Thermal insulation	1	PU bag

6 Transporting the boiler

Use suitable equipment to transport the individual boiler sections (delivery as loose sections) and other individual parts.

WARNING: Risk of injury due to inadequately secured boiler sections.

- Use only suitable means of transportation when handling the boiler sections, e.g. a sack truck with strap or a stair or step trolley.
- Secure the individual boiler sections to prevent them from sliding off when transporting them.

NOTICE: Risk of system damage due to impacts.

The standard delivery of the Logano GE515 oil-/gas-fired special boiler contains components that are sensitive to shock.

- During handling protect all electronic and other components against impact.
- Please observe the transport instructions on the packaging.

NOTICE: Risk of system damage due to contamination.

If you intend to keep the boiler in storage once it has been assembled, observe the following:

- Protect the boiler connections against contamination by sealing them off or covering them.

Dispose of packaging in an environmentally responsible manner.

7 Positioning the boiler

This chapter describes how to properly position the GE515.

NOTICE: System damage through frost!

- Install the system in a room free from the danger of freezing.

7.1 Tools and accessories

The following tools and auxiliary materials are required for the boiler assembly (the listed items must be provided by the installer):

- Boiler compression tool 2.2 (Fig. 4, page 14) or 2.3 (Fig. 5, page 14)
- Boiler block support for fitting the boiler sections together
- Steel hammer and wooden or rubber mallet
- Half-round bastard file
- Screwdriver (Philips and flat head)
- Flat chisel
- Spanners, sizes 13 mm, 19 mm, 24 mm and 36 mm, and socket size 19 mm
- Support wedge, flat iron
- Cleaning rags and cloth
- Fine emery cloth
- Wire brush
- Lubricating oil
- Solvent (petrol or solution)
- Spirit level, ruler, chalk, straight edge
- Flange with air vent valve (for pressure test)

7.1.1 Boiler compression tool, size 2.2

Boiler sections	Compression tool per boiler hub	Extension pieces per boiler hub	Length (overall) in mm
7–10	1	0	2160
11–12	1	1	2760

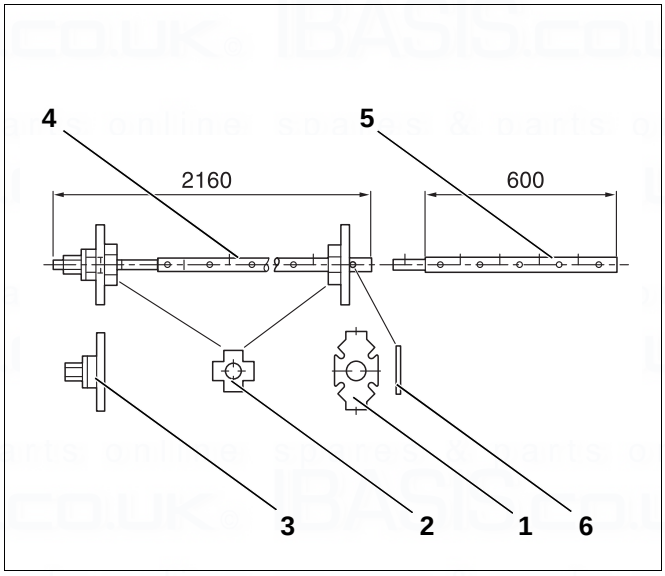

Fig. 4 Boiler compression tool size 2.2 (dimensions in mm)

1 Mating flange
2 Additional flange
3 Compression unit
4 Pull rod
5 Extension
6 Dowel pin (size 2.2)

7.1.2 Boiler compression tool size 2.3 (complete in the toolbox)

Boiler sections	Compression tool per boiler hub	Extension pieces per boiler hub	Length (overall) in mm
7–12	1	3	3080

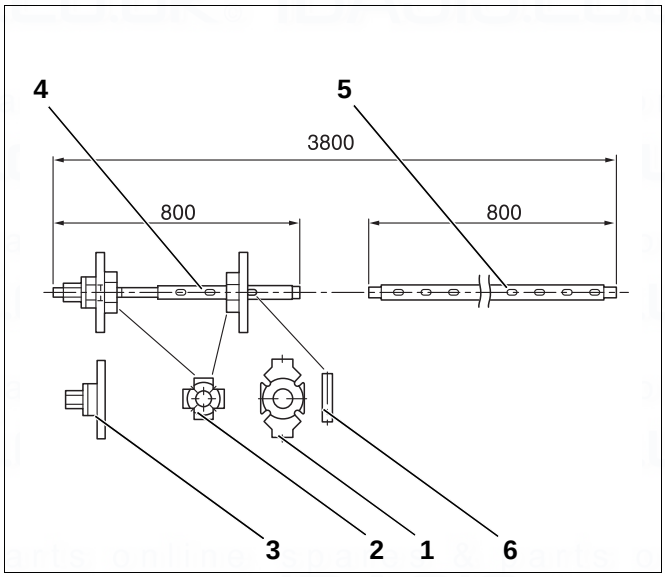

Fig. 5 Boiler compression tool size 2.3 (dimensions in mm)

1 Mating flange
2 Additional flange
3 Compression unit
4 Pull rod
5 Extension
6 Wedge (size 2.3)

7.2 Recommended wall clearances

- Observe the recommended wall clearances for swinging out the burner door, for boiler installation and for cleaning and maintenance (→ Fig. 6 and table below).

The burner door can be right or left hung/opening (the boiler is always supplied with the door attached on the right).

When installing your boiler maintain the recommended minimum dimensions (shown in brackets). Select the recommended clearances between wall and boiler to enable easy access for installation, maintenance and service work.

The wall clearance on the hinge side must be at least the same as the amount by which the burner projects (AB). A distance of AB + 100 mm from the wall is recommended.

Boiler size		Clearance A in mm	
kW	Boiler sections	recommended	minimum
240–350	7–9	1700	1000
400–510	10–12	2200	1000

If you do not observe the recommended minimum clearance A (Fig. 6), you will not be able to use the cleaning set (accessory) to clean the boiler. As an alternative, we recommend using shorter (approx. 1 m in length) mountable cleaning devices or wet cleaning.

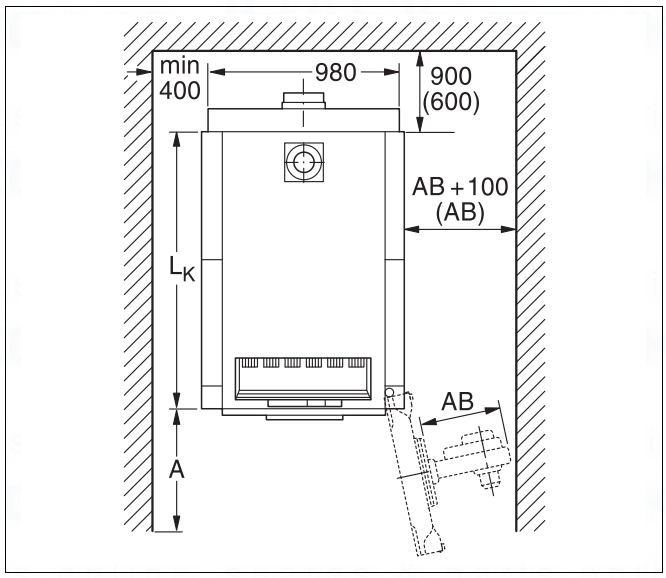

Fig. 6 Boiler room with boiler (dimensions in mm)

7.3 Installing the boiler on a plinth or foundation

A silencing boiler plinth is available as an accessory from Buderus.

If this boiler plinth is not used, a concrete foundation can be constructed on-site. When building the foundation, a 100 × 50 × 8 mm steel angle or 100 × 5 mm steel flat should be incorporated to ensure that the boiler sections can slide when the boiler is installed (→ Fig. 7 and table below).

- When building the foundations, consider to which side the burner swings out (left or right-hand burner door stop, Fig. 6, page 15).

It is advisable to place the boiler on a 50 – 80 mm high base (Fig. 7, [1]). The installation area must be completely flat and level. The front edge of the boiler should be flush with the edge of the foundation.

Number of boiler sections	L_1 (foundation) in mm	L_2 (steel section) in mm
7	1360	1190
8	1530	1360
9	1700	1530
10	1870	1700
11	2040	1870
12	2210	2040

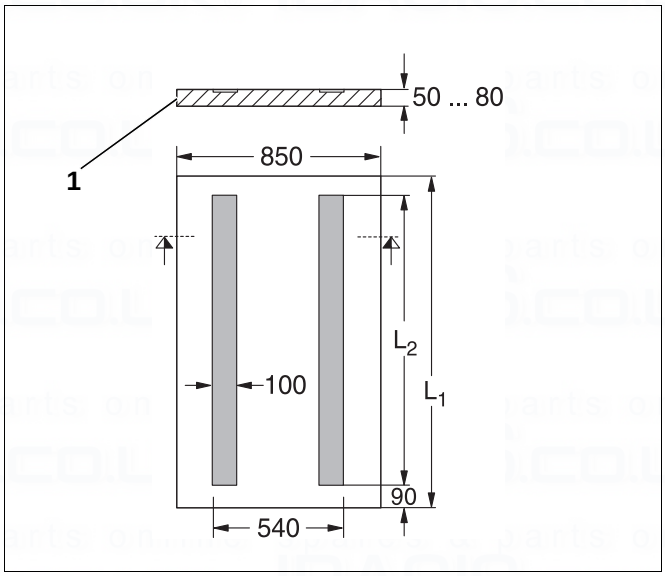

Fig. 7 Foundation dimensions in mm

8 Boiler block assembly

Depending on the type of delivery, we distinguish between delivery in loose sections and as ready assembled block. When delivered as a block, the boiler sections are already fully assembled and checked for leaks prior to despatch. If, because of physical limitations, a boiler block cannot be assembled as a complete unit, delivery as loose sections would enable the assembly on site.

For installation of boiler supplied fully assembled
→ Chapter 8.3 "Positioning the boiler block – supplied as pre-assembled block", page 25.

CAUTION: Risk of injury due to inadequately secured boiler sections.

- Use only a suitable means of transportation when handling the boiler sections, e.g. a sack truck with strap or a stair or step trolley.
- Prevent the boiler sections from sliding off when transporting them.
- Prevent the boiler sections from falling over using the installation aid (accessory) First screw the rear section firmly onto the installation aid (Fig. 9, page 18).

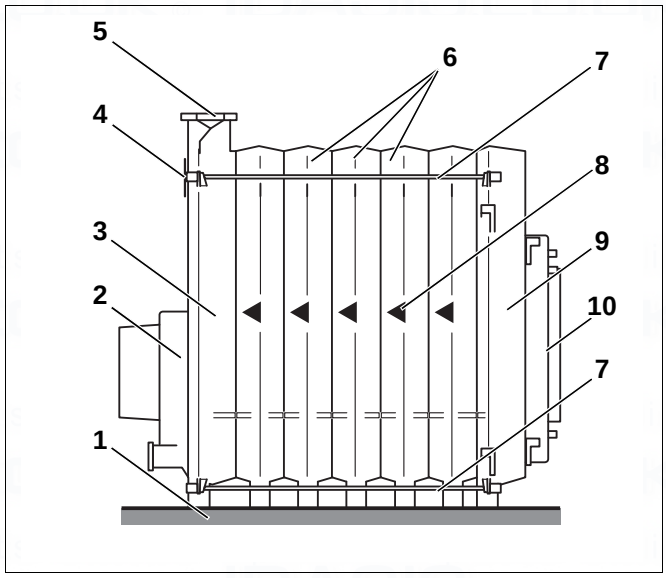

Fig. 8 Boiler block

1 Base/sound-absorbing boiler plinth
2 Flue gas collector
3 Rear section
4 Return connection
5 Flow connection
6 Centre section
7 Anchor rod
8 Installation direction arrow
9 Front section
10 Burner door with burner plate

8.1 Arrangement of boiler sections in boiler block

The boiler block is always installed starting from the rear with the rear section (Fig. 8, [3], page 17) and working towards the front. The front section (Fig. 8, [9], page 17) is always fitted last.

Observe the installation direction arrows (Fig. 8, [8]) during assembly and carry this out in accordance with the following instructions and illustrations.

The installation aid is available on request.

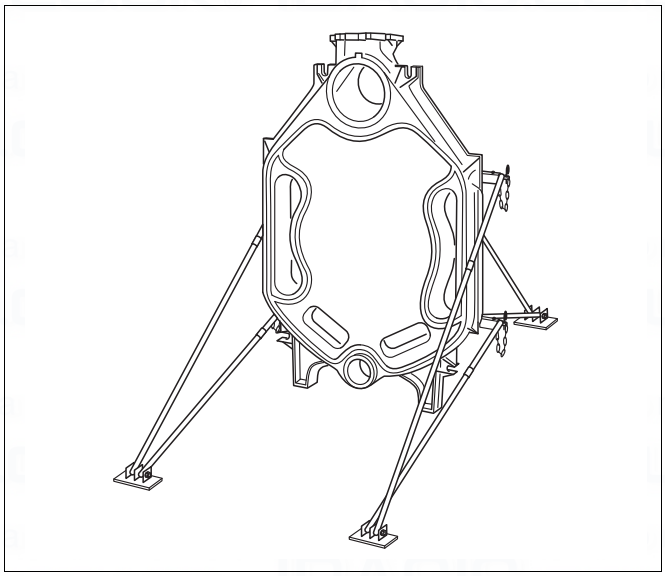

Fig. 9 Rear section with fitted installation aid

8.2 Joining the boiler block assembly

Remove nuts and washers from the studs on the hubs of the boiler sections before attaching the rear section and front section.

- If you are using the installation aid, you will need to remove the cleaning access cover before you can attach it to the rear section.

- Unscrew cleaning access cover on rear section (Fig. 10, [1] and [2]).

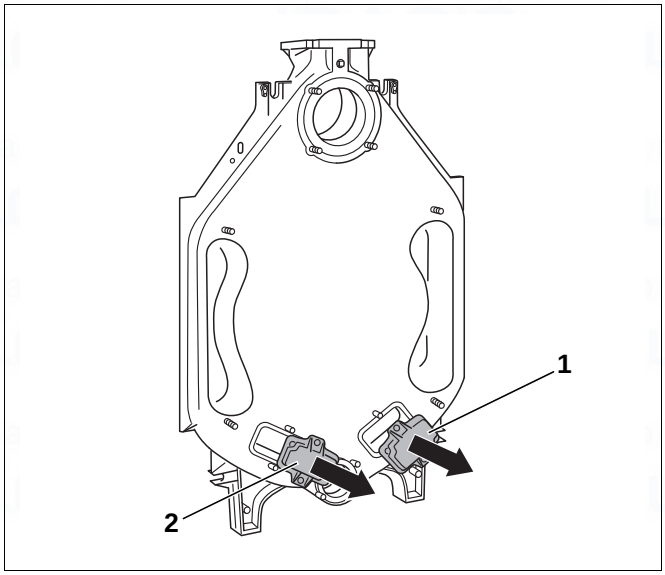

Fig. 10 Remove the cleaning access cover.

- Set up the rear section and secure with the installation aid to prevent it from tipping (→ Fig. 11 and Fig. 9 and separate installation instructions for installation aid).

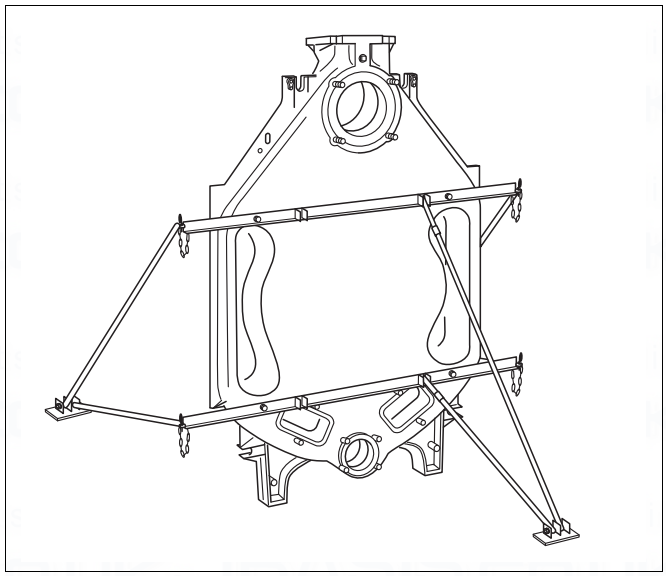

Fig. 11 Fasten installation aid

- File down any burrs on the hubs (Fig. 12).
- Clean the packing grooves where required using a wire brush and cloth (Fig. 13, [3]).

> **WARNING:** Danger of burning from flammable cleaning agents.
>
> - Observe the cleaning agent safety instructions.
> - When using cleaning agents, avoid naked flames, incandescence and sparks.

- Clean the hub sealing faces (Fig. 13, [1] **a**nd [2]) with a rag soaked in white spirit.

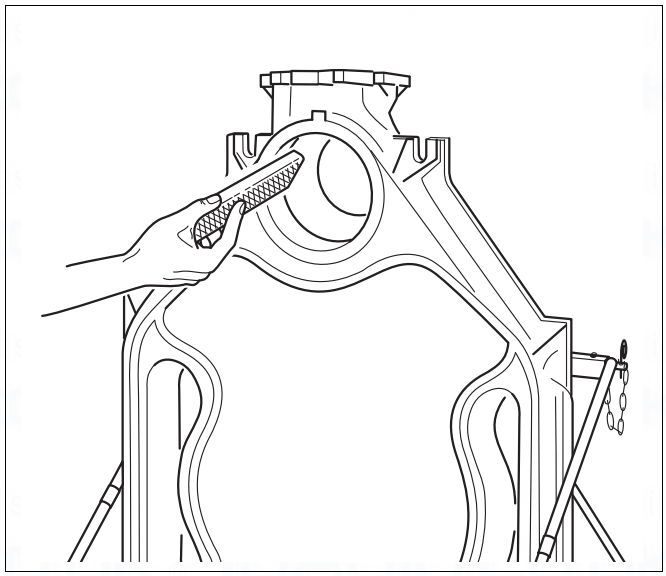

Fig. 12 Filing off flash

- Evenly coat the hub sealing faces with sealant.

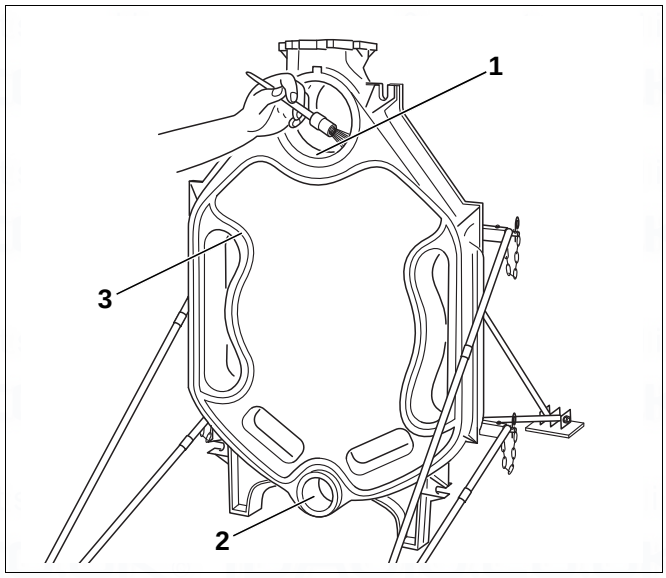

Fig. 13 Prepare packing grooves and hubs

- The next step involves preparing the nipples that will eventually seal the boiler sections.
- Clean nipple with a rag soaked in white spirit and coat evenly with sealant.
- Insert nipples directly into the upper (size 4, 181/70) and lower (size 1, 82/50) hub on the rear section and hammer in crosswise with strong blows.
  Once hammered in, the upper nipple (Fig. 14, [1]) must protrude approx. 45 mm and the lower nipple approx. 35 mm out of the corresponding hubs.
- Remove any burrs with a file.

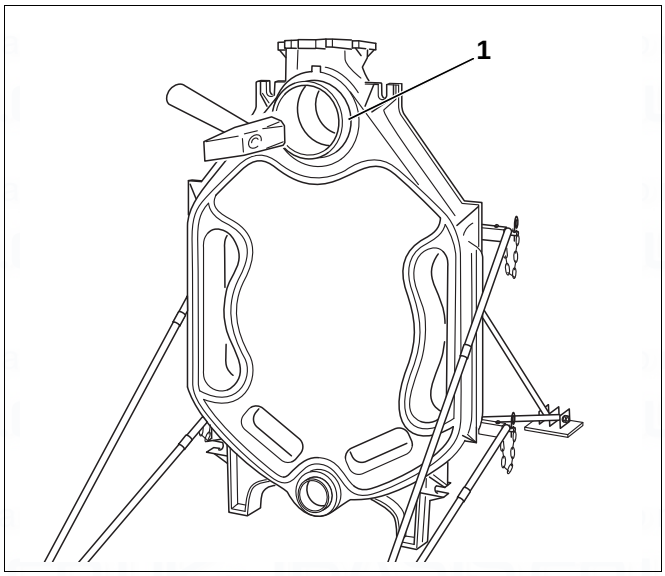

Fig. 14 Driving nipples home

The packing grooves (Fig. 15, [1]) must be clean and dry to enable the packing cord (KM cord) to adhere properly.

- Coat the packing grooves with adhesive (adhesive base)

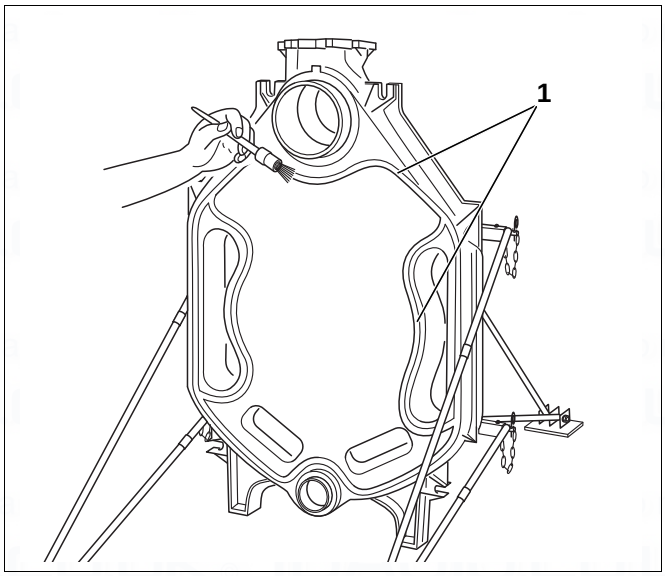

Fig. 15 Coating the packing grooves with adhesive

CAUTION: Risk to health from vapours released and also skin contact during the processing of materials, such as adhesives, adhesive bases or sealants.

- Observe processing and safety instructions on the material packaging.
- Ensure good ventilation in the installation area.
- Wear work gloves to avoid contact with skin.
- The product and its container must be treated as hazardous waste for disposal purposes.

- Insert the flexible packing cord (KM cord: Fig. 16, [2]) on the front of the rear section, starting around the upper hub, into the packing grooves (Fig. 16, [1]) and press in lightly. At the butt joints, overlap the packing cord by approx. 2 cm and press firmly together.

Unroll the required length of packing cord from the roll supplied. Peel the backing paper from the packing cord (without stretching it) as you insert the cord into the packing groove.

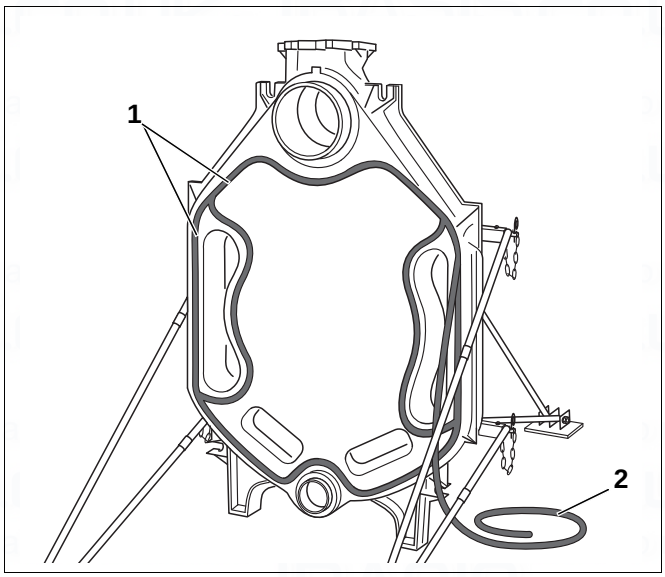

Fig. 16 Inserting packing cord (KM cord)

Preparation of the first central section:

- File down any burrs on the hubs (as shown in Fig. 12, page 19).
- The packing springs must be clean and dry. Clean if necessary.
- Clean the hub sealing faces with a rag soaked in white spirit.
- Evenly coat the hub sealing faces with sealant (Fig. 17, [1]).
- Coat the packing springs with adhesive (adhesive base) (Fig. 17, [2]).

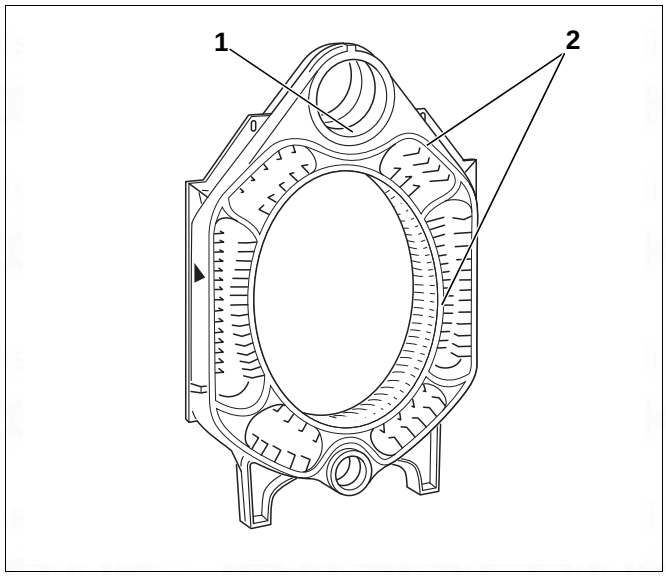

Fig. 17 Preparing the centre section

- Position the central section so that the upper and lower hubs (Fig. 18, [2] and [4]) fit onto the nipples in the rear section. The installation direction arrow (Fig. 18, [3]) must point towards the back.

- To make installation easier, place the boiler section to be fitted onto the nipple on the upper hub first.
  Once this has been done, the boiler section can be aligned with the lower hub.

- Drive first central section onto the rear section using a wooden or a rubber mallet (Fig. 18, [1]).

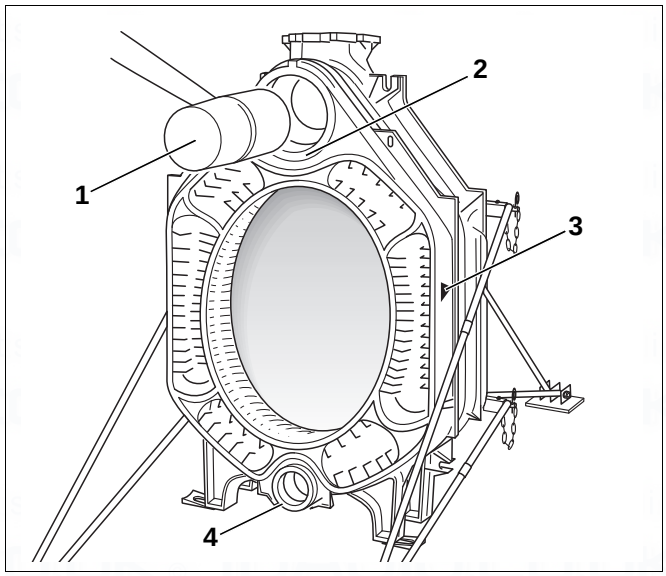

Fig. 18 Knocking the centre section into place

Before the nipples are inserted in the next central section, the part-assembled boiler block must be pulled together using the boiler compression tool.

Use a size 2.2 or 2.3 boiler compression tool (Fig. 4 or Fig. 5 and Fig. 19, [1] and [2]).

- Push pressure flanges (Fig. 19, [3]) with clamping nuts onto the pull rods (Fig. 4, page 14 or Fig. 5, page 14, [4]).
- Push a pull rod through the upper and lower hubs on the boiler.
- Push mating flanges onto the pull rods and secure each with wedge (dowel pin for compression tool 2.2).
- Hold the pull rod in the middle of the boiler hubs and slightly draw together the compression tools using the clamping nut.

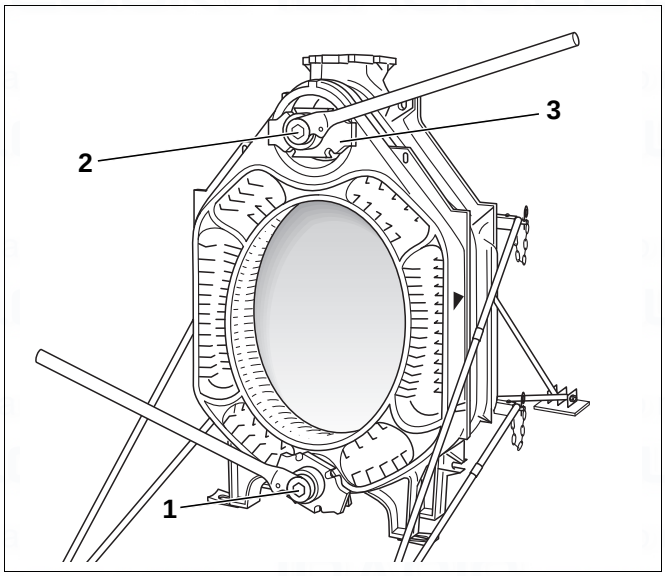

Fig. 19 Using the boiler compression tool

NOTICE: The boiler can be damaged by pulling the boiler sections together incorrectly, or due to excessive compression.

- Ensure that the nipples are positioned straight in the boiler hubs after being hammered in and that they have not been damaged.
- Never compress more than one nipple joint at a time.
- Stop compressing the sections when the boiler hubs meet.

- Place ratchet wrench onto clamping nuts and compress boiler sections by tightening evenly.

WARNING: Danger of accident from material fatigue. Improperly used or poorly maintained compression tools may break.

- Never work directly in front of the compression tool while it is being tensioned.
- Ensure that no one is standing in front of the compression tool.

- Release and remove the boiler compression tool.
- Check nipples are seated correctly.

NOTICE: Risk of damage to compression tool

The compression tool may be damaged or destroyed, if you compress pull rods with loose threaded connections.

- Always check the pull rods before each use and retighten as necessary. The pull rod is correctly positioned if it is fully inserted and no thread is showing (Fig. 20, [2]).
- Always keep the thread (Fig. 20, [1]) clean. Dirty threads may damage the compression tool during compression.
- Always lubricate the thread sufficiently.

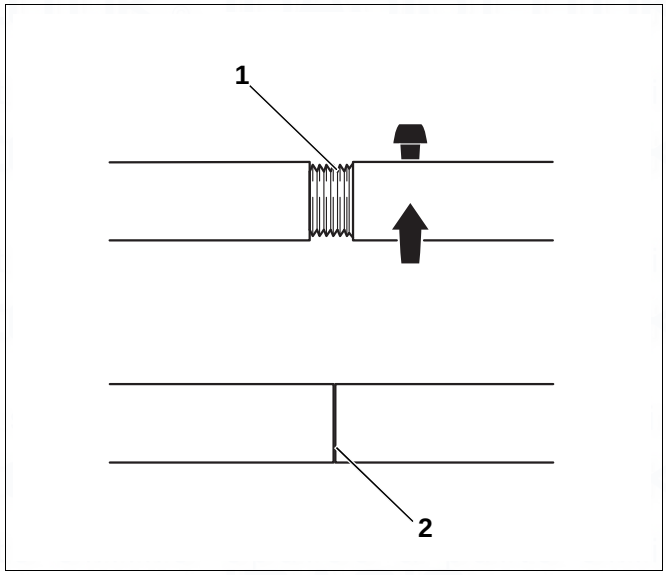

Fig. 20 Boiler compression tool 2.3

Fig. 21 shows the rear section with centre section fitted. The preparations for fitting the next centre section have also been made.

The boiler section has been equipped with foot wedges for ease of installation (Fig. 21, [1]).
The boiler section foot wedges are also used later for final levelling of the boiler block.

Assemble all other boiler sections as described. The front section is fitted last.

WARNING: Risk of injury due to falling boiler sections.

- Remove the installation aid first if the partly-assembled boiler consists of at least three boiler sections.

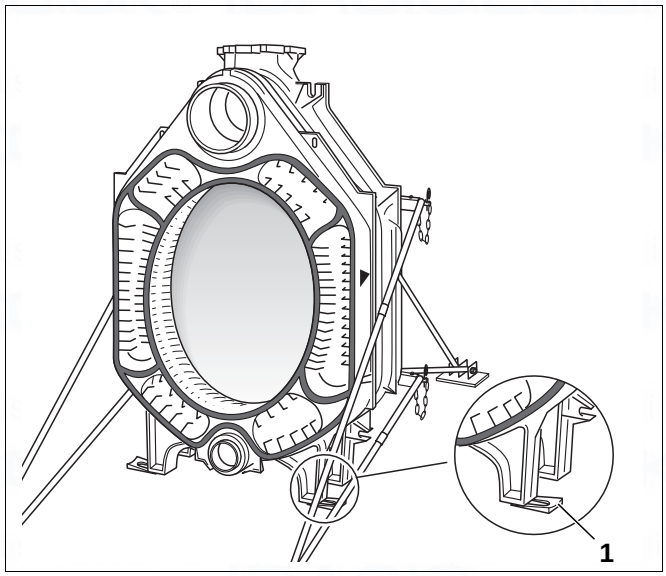

Fig. 21 Using the boiler section foot wedges

- After the front section is installed, loosen the compression tool but do not remove it. Fit the anchor rods first.

- Insert the anchor rods (with spring packs fitted) into the cast lugs on the top left and right and bottom left and right, next to the boiler hubs (Fig. 22, [1] to [4]).

NOTICE: Damage to system through excessively low contact pressure.

- Do not compress the spring pack. Only use the spring pack in its original state.

- Tighten the nuts fingertight.
- Tighten the nuts on the anchor rods 1 to 1½ turns.
- Level the boiler vertically and horizontally on the foundation/silencing plinth (→ Chapter 7 "Positioning the boiler", page 13).
- Remove boiler compression tool.

The next step describes the installation of the feed pipe (→ Chapter 8.4 "Inserting the feed pipe (parts carton)", page 26).

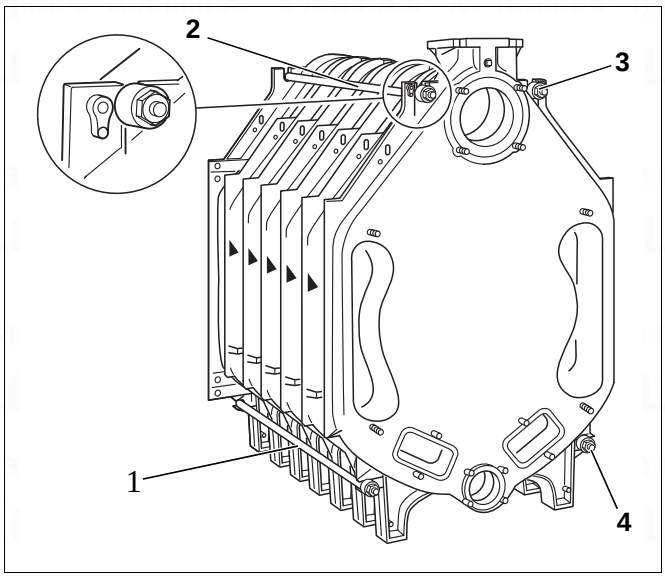

Fig. 22 Fitting the anchor rods

8.3 Positioning the boiler block – supplied as pre-assembled block

- Cut through the securing straps (Fig. 23, [1]).
- Remove the pallet prior to positioning the boiler block (Fig. 23, [2]).

DANGER: Risk of fatal injury from falling objects.

- Ensure a suitable means for bearing the load is available.
- Observe the accident prevention regulations VBG9a "Lifting tackle for use with lifting equipment".

- Level the boiler block vertically and horizontally on the base/impact sound-absorbing plinth (→ Chapter 7.3 "Installing the boiler on a plinth or foundation", page 16). Use the boiler section foot wedges provided for this purpose.

The following pages describe the installation of the feed pipe and sensor well. You must do both irrespective of whether the boiler is supplied pre-assembled or in separate sections.

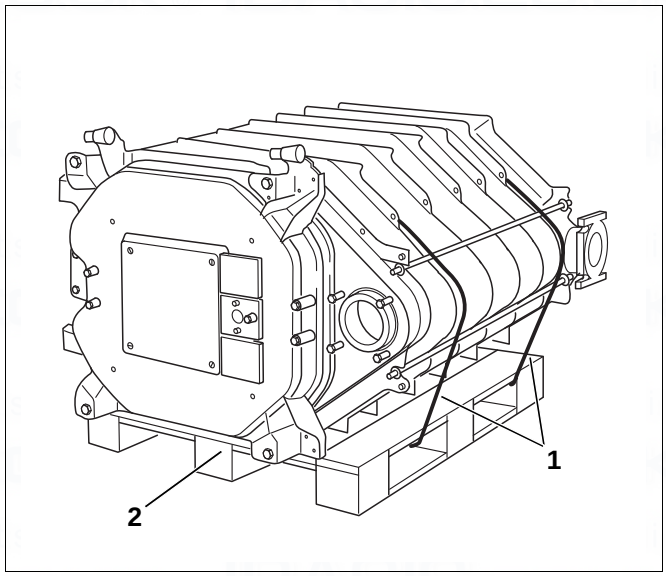

Fig. 23 Boiler block on pallet

8.4 Inserting the feed pipe (parts carton)

With boilers that are made up of 10–12 sections, the feed pipe (Fig. 24, [4]) comes in 2 parts.

- Slide gasket over the feed pipe (Fig. 24, [1]).
- Push the feed pipe from the front into the upper boiler hub.
- Close off with dummy flange (Fig. 24, [2]).

The feed pipe must be fixed in such a way that the escape openings on the feed pipe are positioned at the correct angle. This ensures optimum distribution of water in the area of the upper boiler hub.

- Make sure that the lug (Fig. 24, [3]) on the end plate of the feed pipe fits in the recess in the upper boiler hub (Fig. 24, [5]).

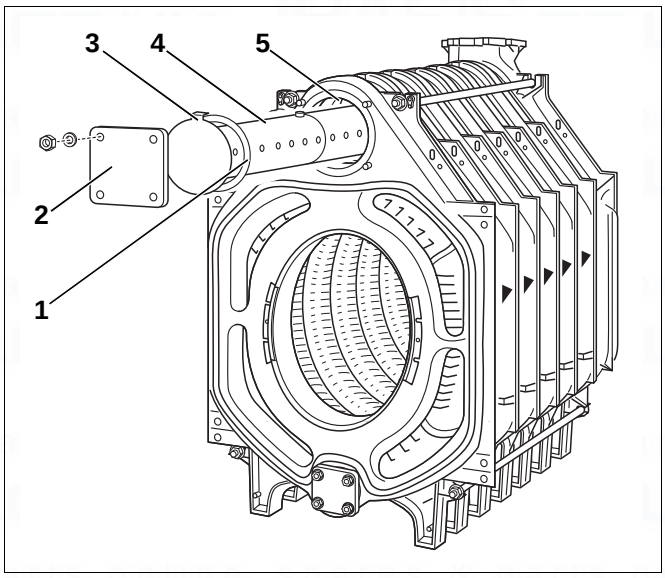

Fig. 24 Installing the feed pipe

8.5 Seal-in the sensor well

- Seal the sensor well R ¾ from the rear of the boiler (length: 110 mm) into the R ¾ tapped hole of the flow connection (Fig. 25, [1]).

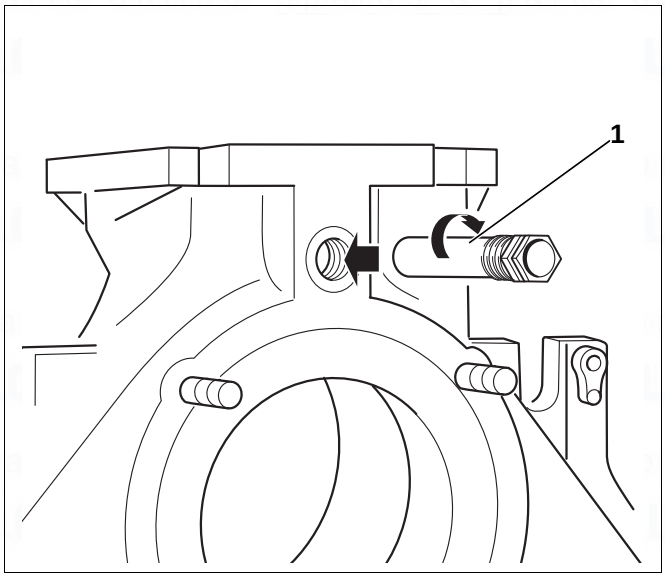

Fig. 25 Fitting the sensor well

8.6 Carrying out a leak test

Only carry out a leak test if the boiler heat exchanger has not been delivered pre-assembled. Pre-assembled sections are leak tested in the factory.

For the further installation of pre-assembled boiler sections, see (→ Chapter 11 "Installing the burner", page 47).

8.6.1 Preparing for a leak test

- Close off lower boiler hub (Fig. 26, [3]) at the front and rear. To do this, place corresponding seal (Fig. 26, [1]) on the relevant boiler hub and screw on flange cover with edge length 110 mm.
  In this case, the flange with the tapped hole (R ¾) for the fill and drain connection (Fig. 26, [2]) is mounted on the rear of the boiler.
- Installing the on-site fill and drain valve.
- Close off flow and return connections (mount flange with air vent valve on flow connection).

NOTICE: Risk of system damage from excessive pressure.

- Ensure that no pressure, control or safety equipment is fitted.

- Slowly fill the boiler with water via the fill and drain connection. While doing this, vent the boiler via the boiler flow connection with air vent.

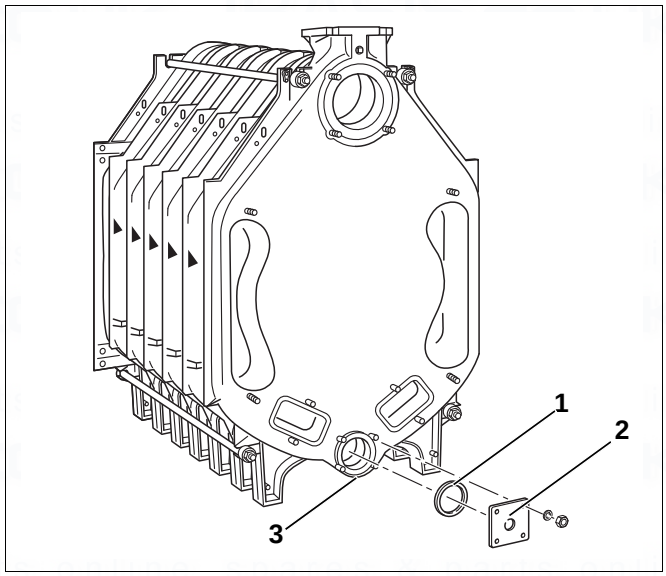

Fig. 26 Fitting the flange

8.6.2 Carrying out a leak test

Carry out a leak test at a test pressure of 8.6 bar (in accordance with the requirements of the European Pressure Vessel Directive).

Use a pressure gauge class 1.0 to measure the pressure.

- If a hub connection is leaking, first drain the water through the fill/drain taps.
- Remove feed pipe.
- Undo nuts on anchor rods and remove anchor rods.
- Separate the boiler at the leak location by driving (knocking) in flat wedges or chisels between the sections at the points provided at the top and bottom (Fig. 27, [1] and [2] between the sections.

- Use new nipples and new packing cord for the reassembly.
- Pull the boiler back together and repeat the leak test.

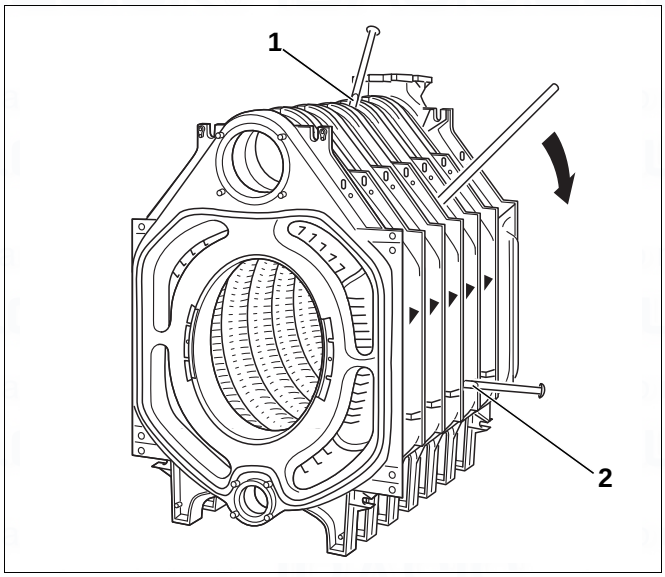

Fig. 27 Separate the boiler block

8.7 Boiler water connections

Please observe the following information regarding the boiler connection to the pipework. This is important to ensure trouble-free operation.

NOTICE: System damage due to leaking connections!

- Join the pipes to the boiler connections in such a way that they are free of stress.

NOTICE: System damage caused by deposits, local overheating, noise and corrosion.

- As a basic rule, flush existing systems before connecting the boiler.
- Install a desludging unit in the heating system return to prevent damage to the boiler.

The weld neck flange (with welded-on pipe) is fitted to the upper boiler hub (Fig. 28, [3] – return connection) if the return is connected at a later stage.

The weld neck flange and flat gasket are shown in (Fig. 28, [4] and [5]).

- The flow connection flange (Fig. 28, [1]) with flat gasket (Fig. 28, [2]) is required for connecting the flow at a later stage.

The boiler safety equipment assembly (accessory) is available from Buderus upon request.

NOTICE: Risk of system damage due to temperature stresses!

- When the heating system is in operation, never fill it via the boiler drain & fill valve. Instead, only use the filling valve in the heating system (return).
- Have the customer install a fill valve in the heating system (return).

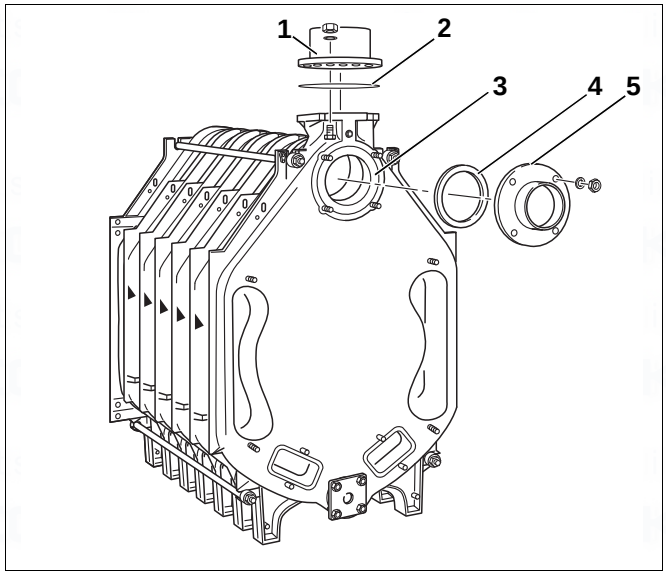

Fig. 28 Fitting a connection flange

8.8 Installing fittings and burner door

In contrast to the delivery in separate sections, when the boiler is delivered pre-assembled the burner door and flue gas header are fitted to the boiler block at the factory.

8.8.1 Positioning the flue gas header

The GP packing cord (fibre glass cord with silicon casing) which forms a seal is inserted in the flue gas header at the factory.

- Place the flue gas header onto the four threaded studs on the rear section (Fig. 29, [1] to [4]) and secure using washers and nuts.

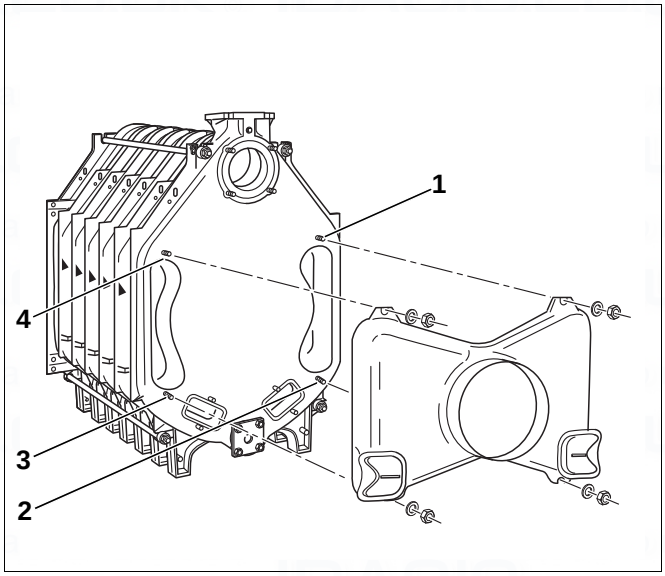

Fig. 29 Installing the flue gas header

8.8.2 Screwing clean-out cover onto rear section

If the cleaning access covers have been removed in order to attach the installation aid to the rear section:

- Screw the cleaning access covers with washers and nuts back onto the rear section (Fig. 30, [1] and [2]).

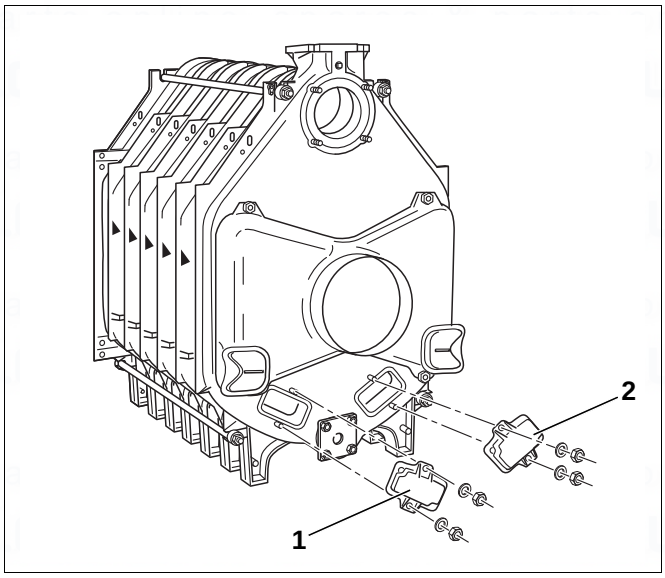

Fig. 30 Fitting the cleaning cover

8.8.3 Installing the burner door

- Place a few drops of Silastik adhesive,15–20 cm apart in the packing grooves (Fig. 31, [2]) on the front section (Fig. 31).
- Insert GP packing cord into the packing groove on the front section. The packing cord joint should be located at the side (Fig. 31, [2]).

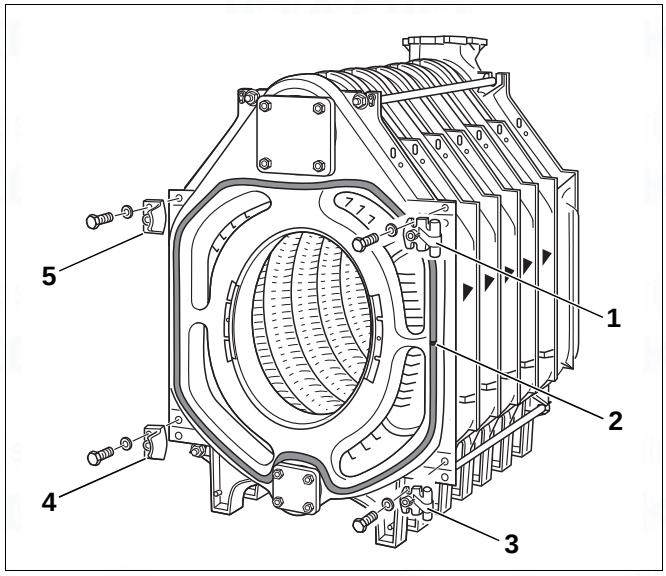

Fig. 31 Fitting the hinge pins and locking strips

In the factory, both burner door hinge lobes are fitted on the right-hand side (Fig. 32, [1] and [2]). For left-hand closing, dismantle the hinge lobes from the right-hand side and reassemble them on the left-hand side of the burner door.

- Screw each hinge pin (right-hand closure) to the front section with two machine bolts M12 × 55 (Fig. 31, [1] and [3]). For left-hand closing, secure accordingly on the left-hand side.
- Screw on locking strips with run-on slopes for the burner door (right-hand closing) to the front section with 2 machine screws M12 × 55 (Fig. 31, [4] **a**nd [5]). For left-hand closing, secure accordingly on the right-hand side.

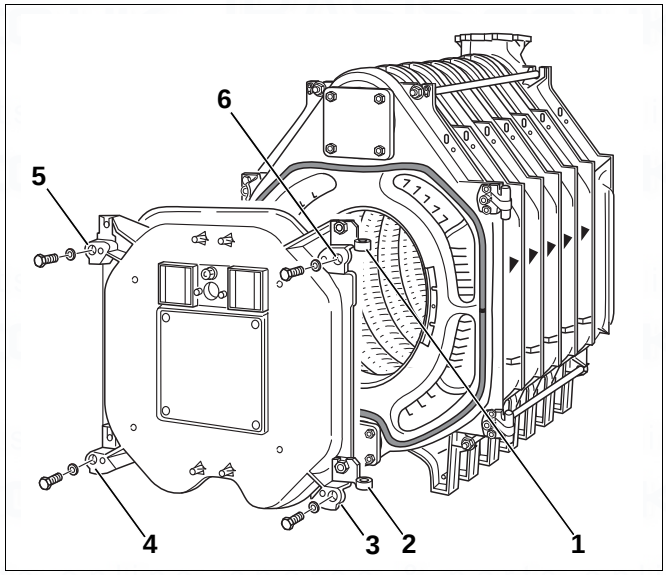

Fig. 32 Hooking in the burner door

- Make sure the run-on slopes of the locking strips are on the inside of the boiler.

- Hook the burner door with the hinge lobes into the hinge pins.

8.8.4 Hot gas check plates on front section

The hot gas check plates (Fig. 33, [1] and [2]) are each screwed with one hexagon socket screw to the front section at the factory.

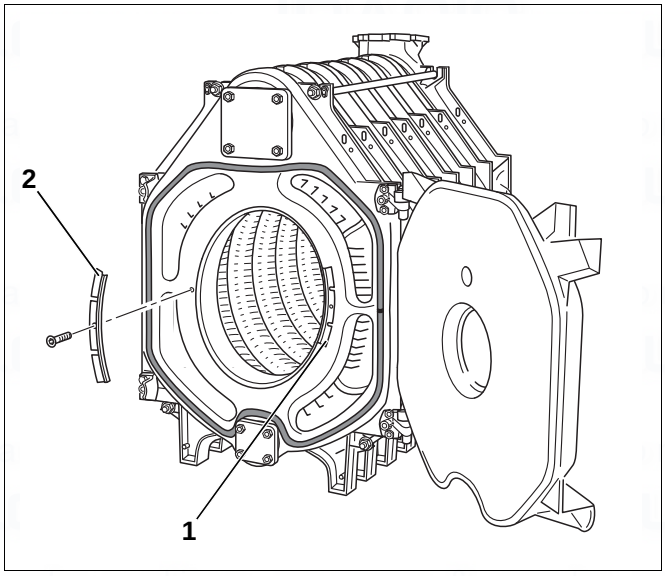

Fig. 33 Position of hot gas check plates

8.8.5 Inserting the hot gas baffle plates

When the boiler is supplied ready assembled, the hot gas baffles are already fitted.

- Remove the corrugated cardboard packaging when the boiler is supplied ready assembled.

- Take hot gas baffles from the fittings case and insert into the hot gas flue according to the inscription on them (→ Fig. 34 and table below).

Boiler size	Number of boiler sections	Length of flue gas baffle plate in mm	Installation information on the flue gas baffle plate (Fig. 34)
240 295 350 400	7 8 9 10	680	Top right Top left Bottom right Bottom left
455	11	425	Top right Top left Bottom right Bottom left
510	12	–	–

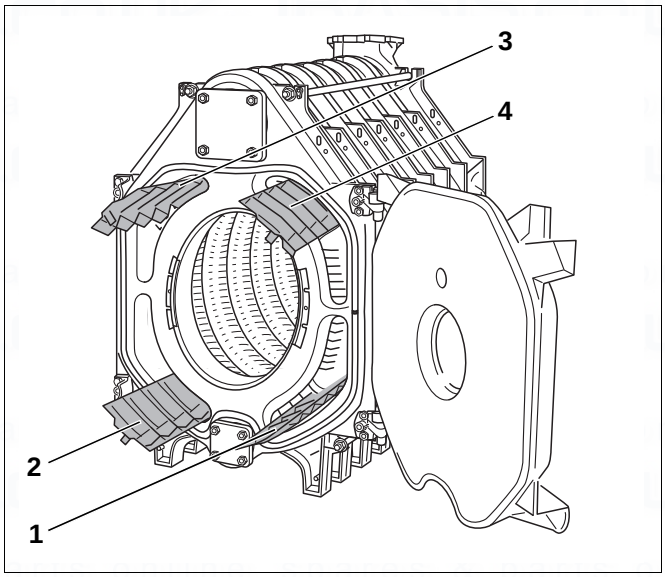

Fig. 34 Hot gas baffle plates

1 Hot gas baffle plates (bottom right)

2 Hot gas baffle plates (bottom left)

3 Hot gas baffle plates (top left)

4 Hot gas baffle plates (top right)

8.9 Installing the boiler casing

This section describes how to install thermal insulation and cladding components.

You must install the cross rails and longitudinal rails before installing the thermal insulation in order to be able to align the brackets correctly.

To install the thermal insulation, you need to take the longitudinal rails off again in the following step.

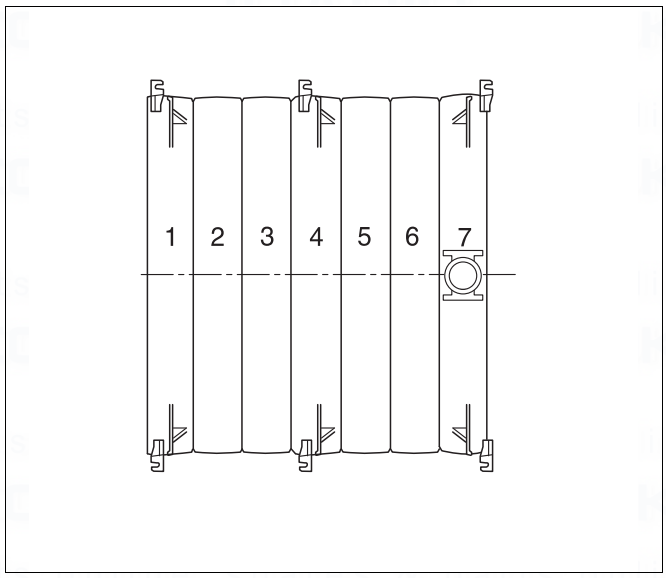

Fig. 35 View from above: boiler block (7 boiler sections) with brackets

8.9.1 Mount the brackets

- Loosely screw the brackets for the boiler casing onto the upper ribs of the boiler sections on the left and right as shown in the table below and Fig. 35 and Fig. 36.

- Screw the brackets on the rear section (Fig. 36, [2]) to the ribs from behind.
- Screw the brackets of the front and centre sections (Fig. 36, [1]) on from the front only.

Total number of boiler sections	Right and left-hand installation on...		
	Front section Section no.	Middle section Section no.	Rear section Section no.
7	1	4	7
8	1	4	8
9	1	5	9
10	1	5	10
11	1	4 and 7	11
12	1	4 and 8	12

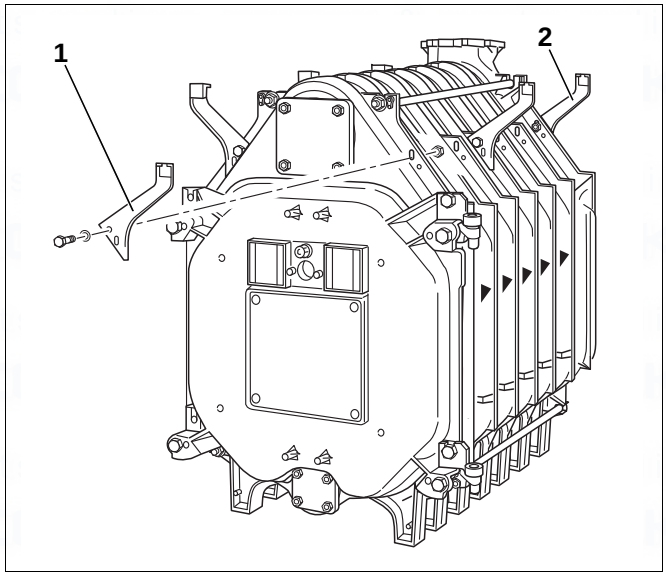

Fig. 36 Installing the mounting brackets

8.9.2 Fitting the connection plates

- Fasten top front cross bars (Fig. 37, [2]) to the cast lugs (Fig. 37, [1] and [4]) and screw on fingertight with hexagon bolts (M8 × 16). The folded edge on the front bar must face forwards.
- Fasten top rear cross bar (Fig. 37, [3]) onto the cast lugs and screw in place with hexagon bolts (M8 × 16). The folded edge of the rear cross bar must point towards the back.

You can only align the longitudinal rails or brackets before placing the thermal insulation.

- Align the longitudinal rails or brackets correctly prior to installation of the side walls, covers and thermal insulation.

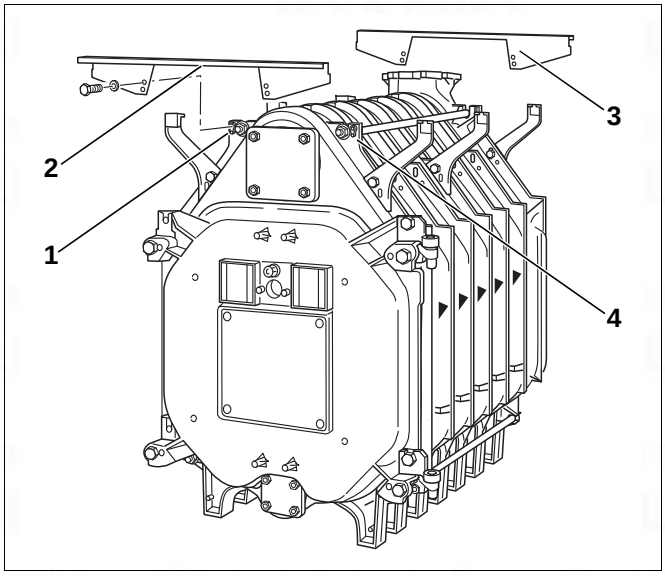

Fig. 37 Fitting the cross bars

- Place the longitudinal rails (Fig. 38, [1] and [2]) on both brackets on the rear and front section.
- Push longitudinal rails with prefitted screws (Fig. 38, [3]) into the recesses in the brackets (Fig. 38, [4]) and screw together.

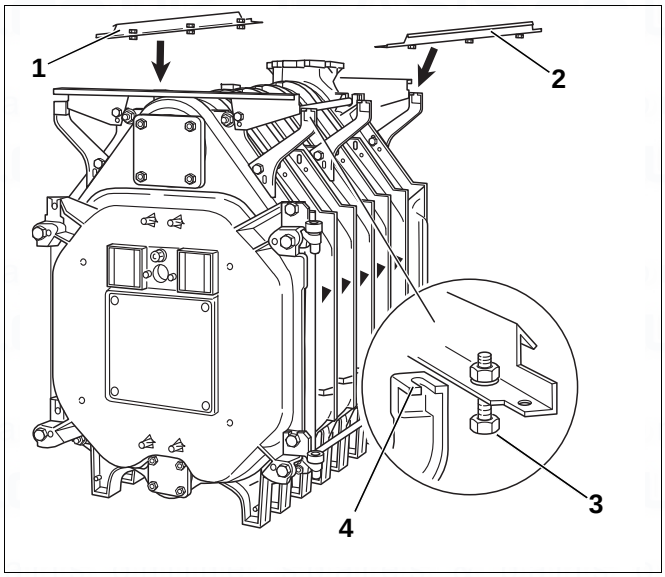

Fig. 38 Installing the longitudinal rails

- Place longitudinal rail (Fig. 39, [1]) with the notch at the front on the notch of the cross bar (Fig. 39, [2]).
- The longitudinal rail must be pushed from below against the cross bar at the rear of the boiler.

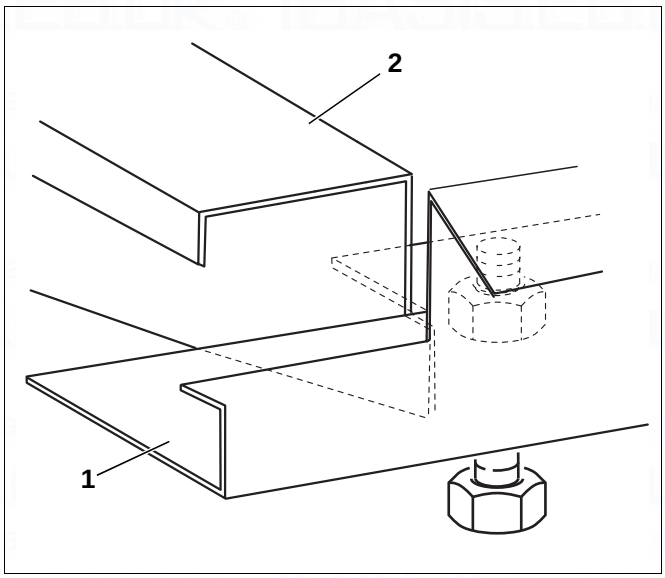

Fig. 39 Place longitudinal rail on cross bar

- Align the longitudinal rails, screw on the brackets at the front and/or rear section (Fig. 40, [1] and [3]) and fully tighten.
- Push the centre brackets (Fig. 40, [2]) against the longitudinal rails from below, then screw onto the boiler block and tighten.

8.9.3 Fitting the thermal insulation

- First of all, take the longitudinal rails off to install the thermal insulation.

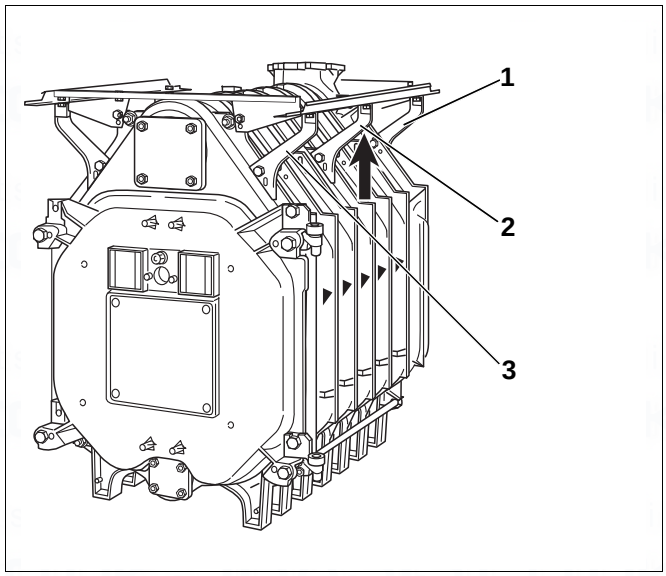

Fig. 40 Aligning the longitudinal rails

- The insulation provided (Fig. 41, [1]) matches the boiler size. Arrange the lagging on the boiler block as shown in the diagram in Fig. 42 (the figures above the thermal insulation which is shown spread out correspond to the number of boiler sections).
- Guide the brackets through the cut-outs in the thermal insulation.
- Push the thermal insulation under the boiler block in the lower section. The boiler section feet are placed in the cut-outs in the thermal insulation.

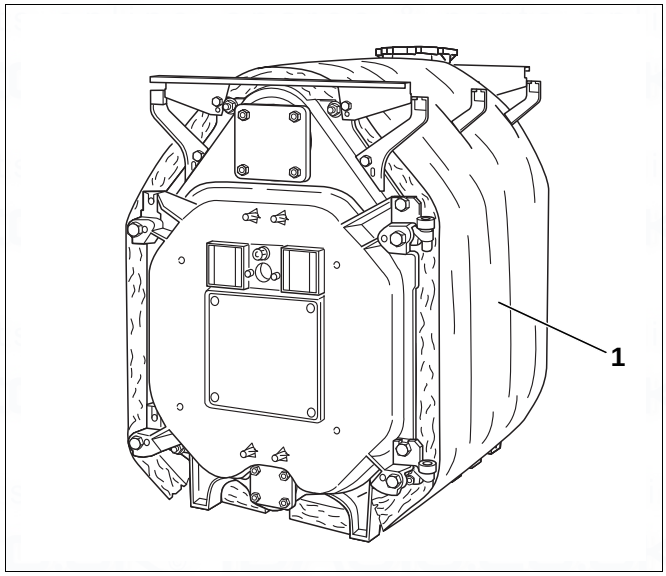

Fig. 41 Boiler block with thermal insulation

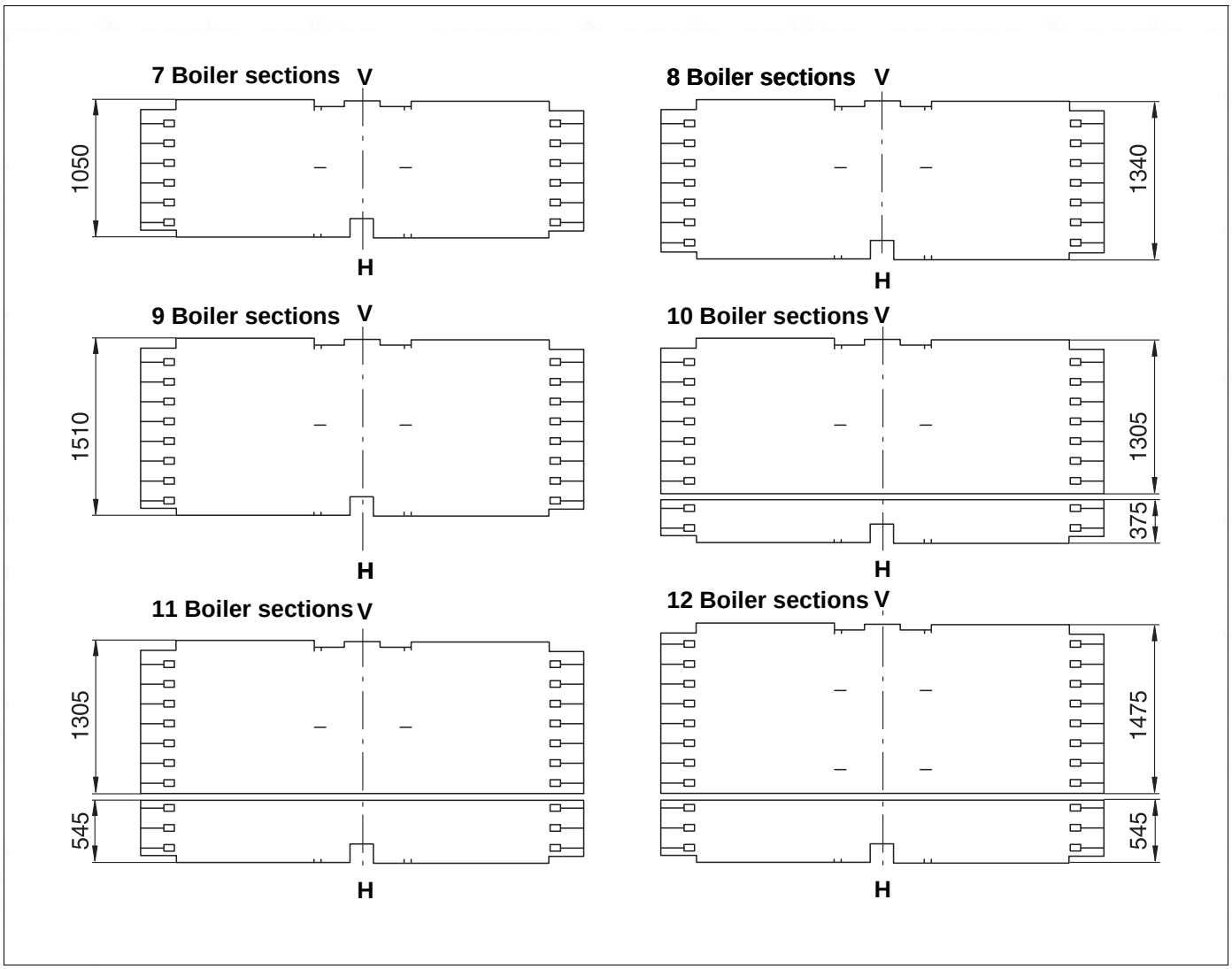

Fig. 42 Thermal insulation for the various boiler sizes (dimensions in mm)

V = front (boiler front)
H = rear (boiler back)

- Screw each lower cross bar (Fig. 43, [1]) at the front and rear to the corresponding boiler section feet with two hexagon bolts. The folded edges of these connection plates must face outwards.

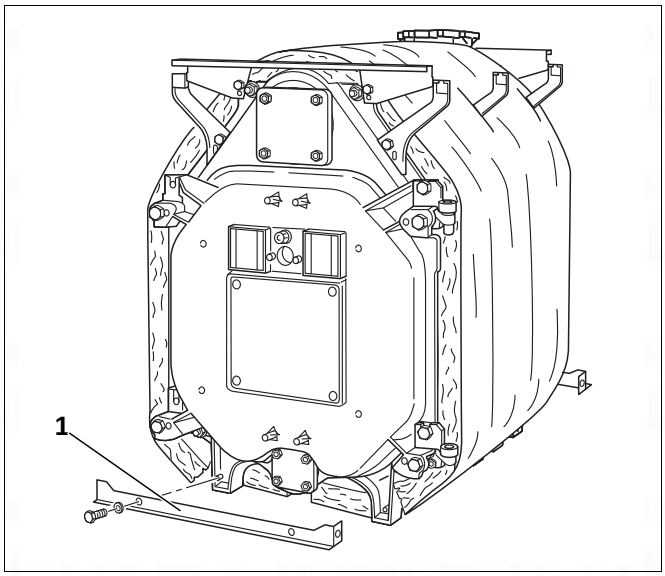

Fig. 43 Fitting the lower cross bars

- Fit rectangular thermal insulation (Fig. 44, [1]) with the cutouts facing upwards at the front above the door.
- Fasten thermal insulation to the block thermal insulation with the 3 tensioning springs (Fig. 44, [2]).

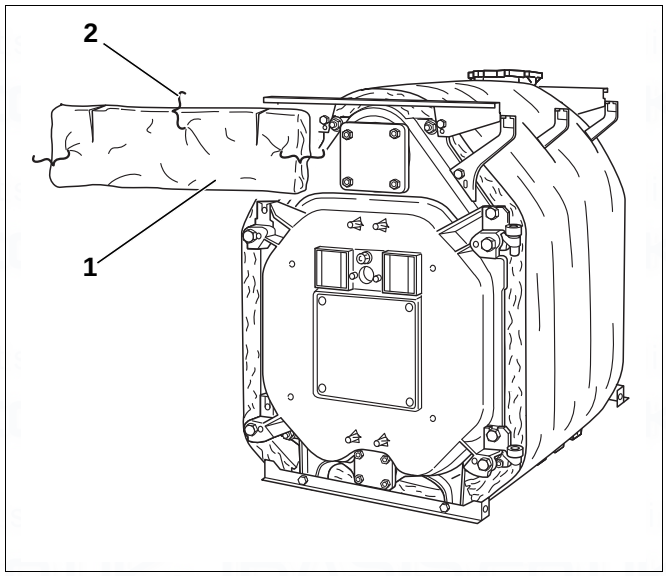

Fig. 44 Installing the thermal insulation at the front

- Push longitudinal rails (Fig. 45, [1] and [2]) with prefitted screws into the recesses in the brackets, as previously described, and screw together.

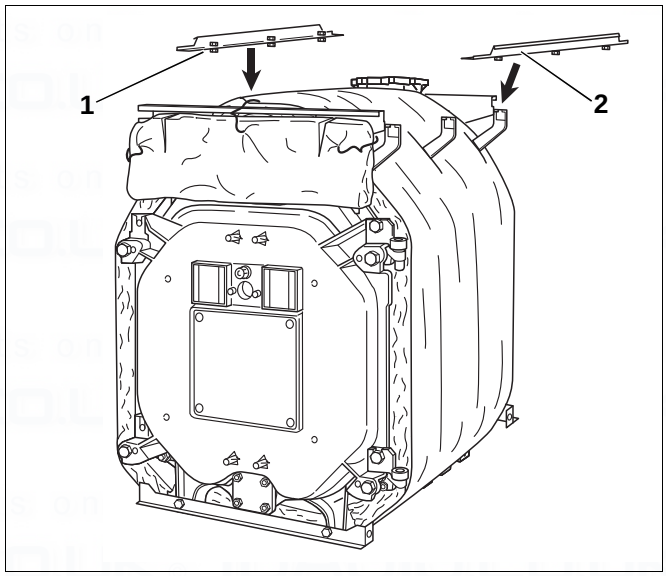

Fig. 45 Installing the longitudinal rails

- Push the thermal insulation for the rear section (Fig. 46, [1]) onto the flue outlet. The cut-out for the boiler return must (Fig. 46, [2]) point upwards.
- Attach the thermal insulation for the rear section via the four tensioning springs to the boiler block thermal insulation.
- Close the slit below the flue outlet with a tensioning spring. (Fig. 46, [3]).

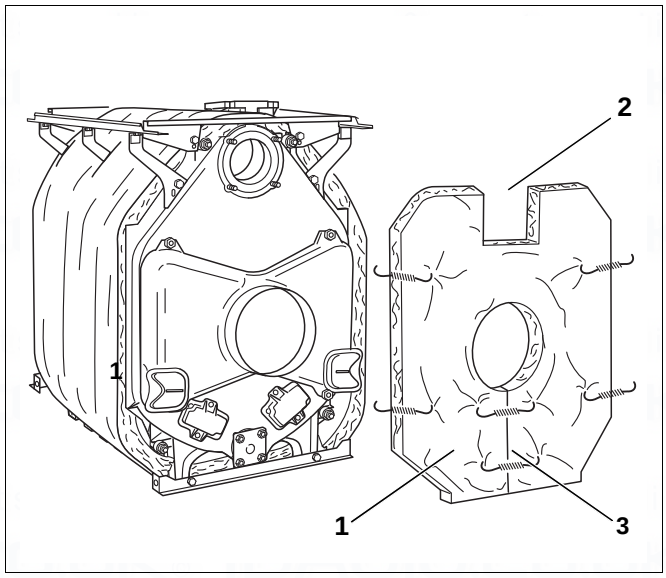

Fig. 46 Fitting the thermal insulation for the rear section

- Hook each base rail (Fig. 47, [1] and [3]) with the long projection facing towards the front (Fig. 47, [2]) into the bottom cross bars.
- Initially screw the side of the base rails loosely to the cross bars using self-tapping screws.

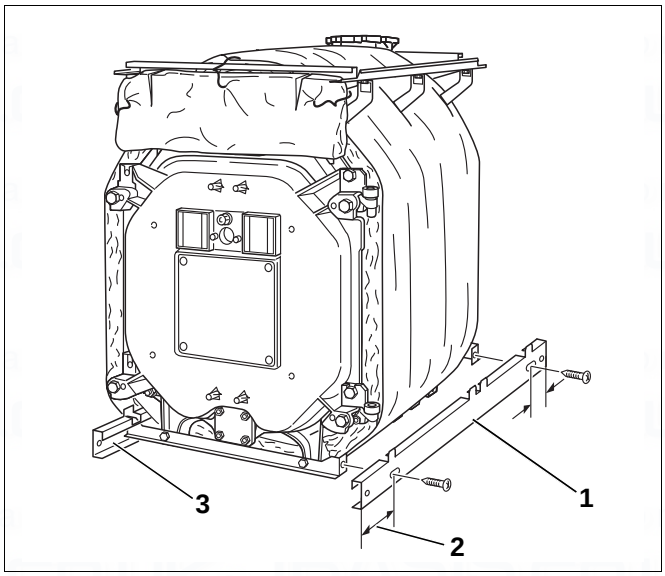

Fig. 47 Mounting the side base rails

8.9.4 Fitting side panels and hoods

- Fit all side panels as shown in the diagram (Fig. 48).

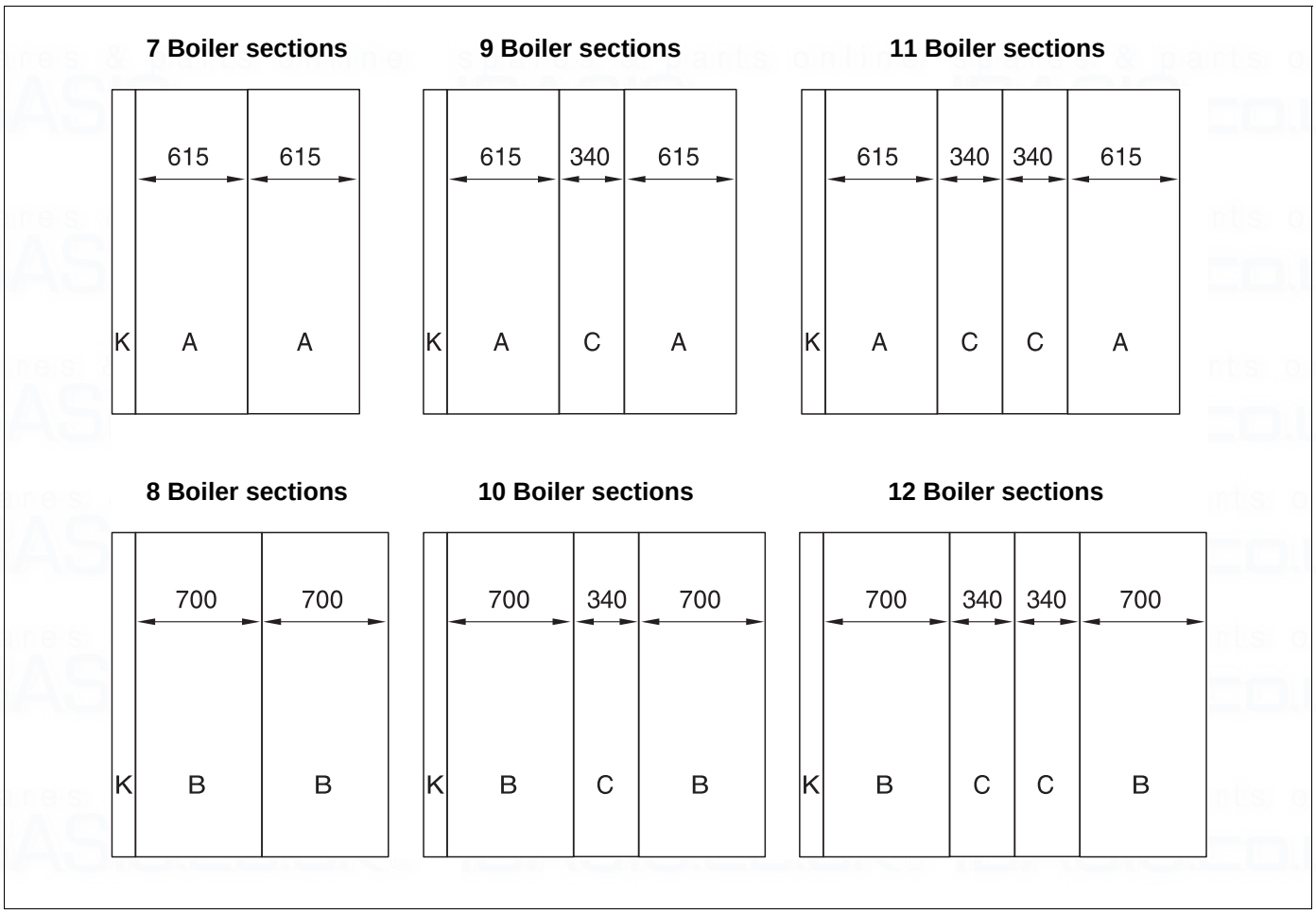

Fig. 48 Arrangement of side panels for the various boiler sizes (dimensions in mm)

K = flap (110 mm)

To fit the side panel sections, the side panel flaps must first be fastened to the front side panels.

- Fasten the hinges to the side panel flaps beforehand using 2 self-tapping screws in each case.
- Hook the hinge pins (Fig. 49, [1]) on the side wall flap into the cut-out of the front side panel and secure with self-tapping screws.
- Attach tension spring (Fig. 49, [2]) to the side panel and side panel flap.

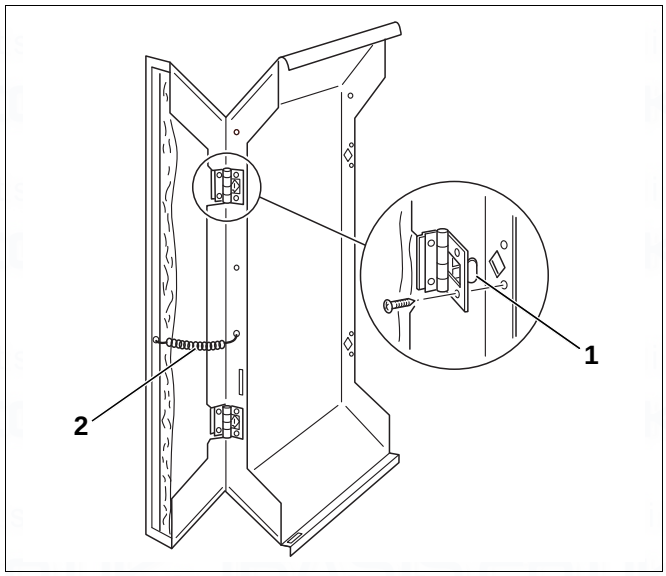

Fig. 49 Fitting the side panel flaps

- Attach the front side panels (Fig. 50, [2]) on the bottom left and right to the lugs in the base rails that have been bent upwards (Fig. 50, [1]) then push up over the folded edge of the longitudinal rails.

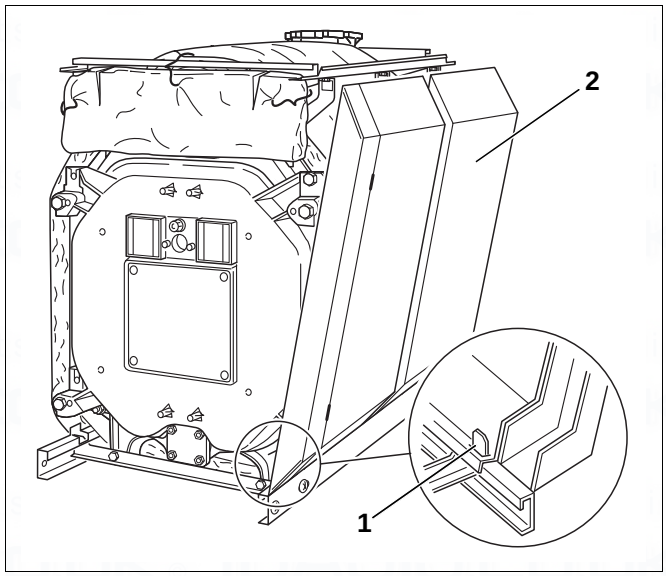

Fig. 50 Attaching the side panel sections

- Once the side panels (Fig. 51, [2]) have been vertically aligned, the self-tapping screws in the base rail (Fig. 51, [4]) must be tightened.
- Push the base rails that run crosswise (Fig. 51, [1] and [3]) into the base rails that run lengthwise from the front and back. The folded edge on the cross plate must be at the bottom in each case, and point towards the boiler (Fig. 51).

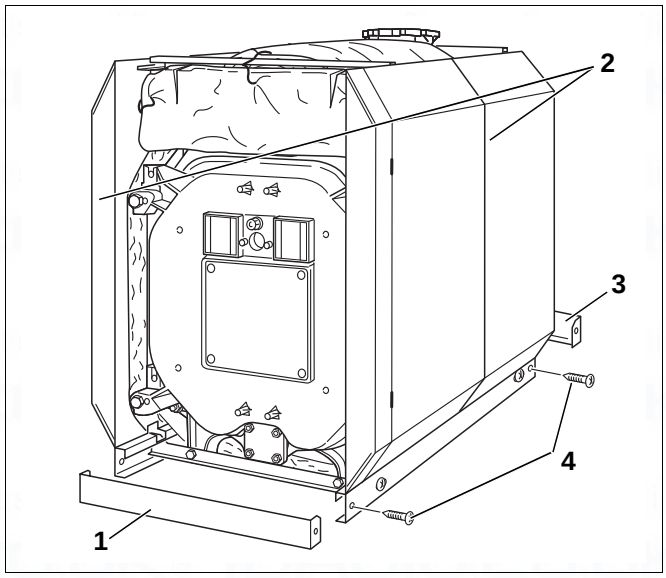

Fig. 51 Mounting the base rails

- Attach the front hood (Fig. 52, [1]) to the front side panels with the two hooks (Fig. 52, [3]).
- Screw the front hood to the longitudinal rails from below with two self-tapping screws (Fig. 52, [2]).

Before fitting the other parts of the hood, you must first install the control unit, route the capillary tubes to the sensor well and insert the sensor into the sensor well (→ Chapter 10 "Installing the control unit", page 44).

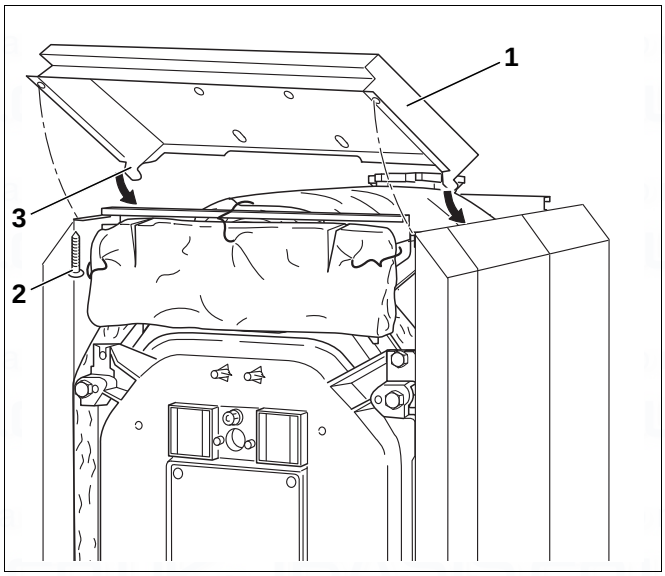

Fig. 52 Fitting the front hood

- Push the centre boiler cover with the folded edges (Fig. 53, [1]) under the front boiler cover and insert into the bead of the side panels.

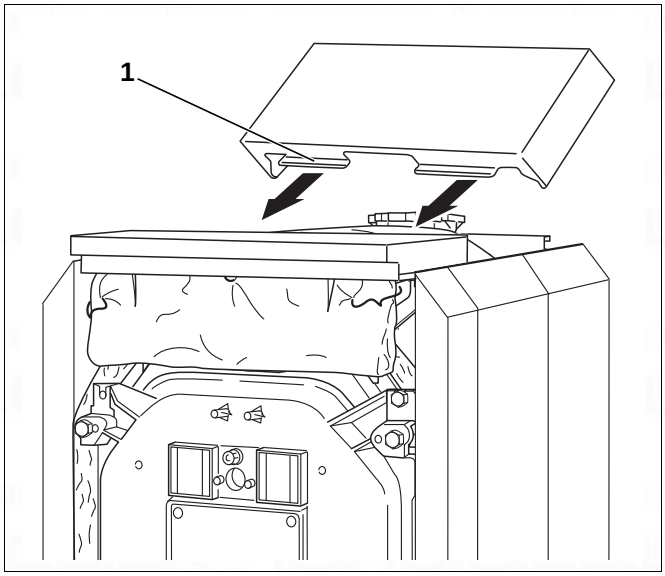

Fig. 53 Fitting the centre hood

- Fit the rear boiler cover on the side panels with the folded edges and cut-out for the heating circuit flow (Fig. 54, [1]) facing towards the front.

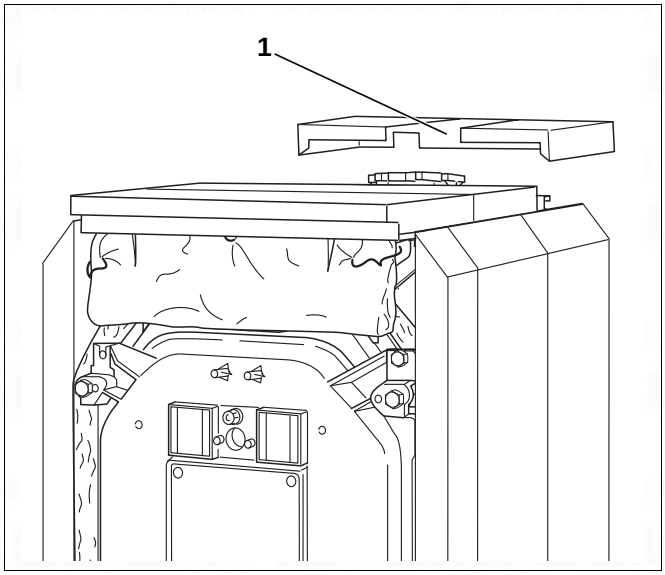

Fig. 54 Fitting the rear cover

- Push upper rear boiler panel under the rear boiler cover (Fig. 55, [1]) and screw to the side panels from the back using four self-tapping screws (Fig. 55, [2]).

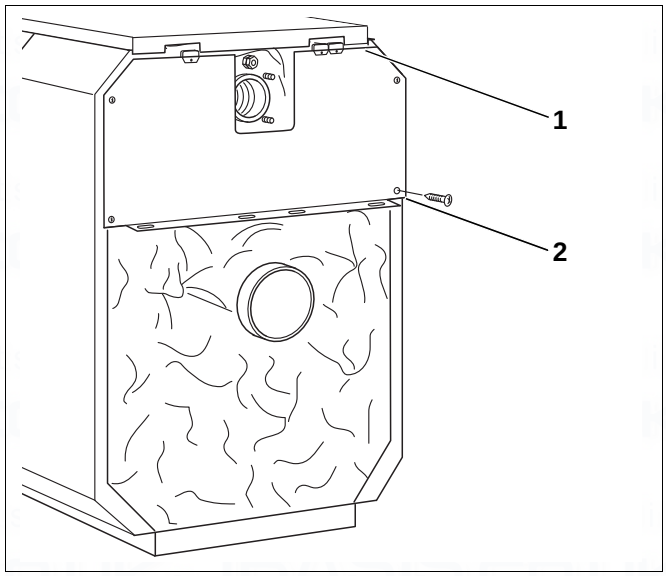

Fig. 55 Fitting the upper boiler rear panel

- Insert snap nuts into the left and right-hand side panels and also the boiler rear panel sections (Fig. 56, [1], [3], [4] and [8]).
- Hang the bottom boiler rear panel sections on the left and right into the slots in the folded edge of the upper boiler rear panel and the side panel (Fig. 56, [5]).
- Secure the rear panel sections of the boiler to the side panels with self-tapping screws.
- Screw the connecting plate (Fig. 56, [2]) below the flue outlet to the boiler rear panel sections using self-tapping screws.
- Fasten the plastic cable entries to the left or right-hand side of the upper boiler rear panel (Fig. 56, [5] and [6]).

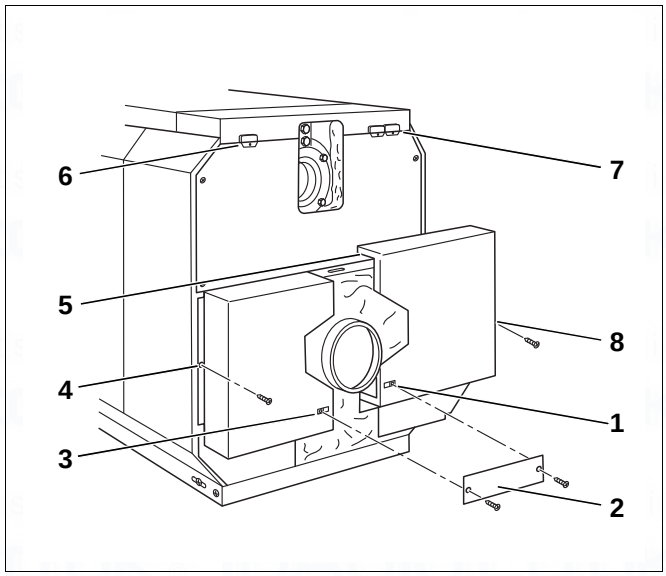

Fig. 56 Installing the boiler rear panel sections

- Snap burner cable with strain relief into cable entry (Fig. 57, [1]).
- Insert the burner cable with strain relief into the burner door cladding.
- Route the burner cable up along the folded edge of the burner door cladding and fasten with the cable clamp to ensure the burner cable does not come into hot components of the boiler.
- Fit the burner door cladding on the burner door from the front and screw on with four machine screws (Fig. 57, [2] to [5]).
- Route the burner cable to the cable entry for the control unit.

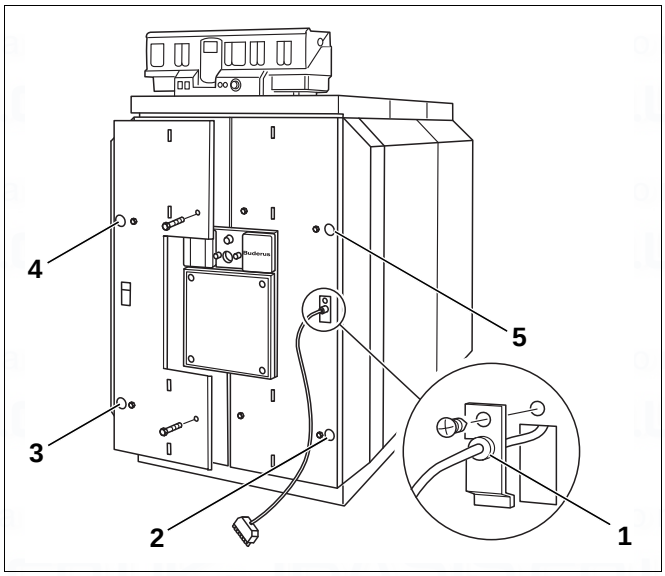

Fig. 57 Install the burner door casing

- Attach the burner door panels to the burner door cladding (Fig. 58, [1] and [2]).
- Subject to the boiler location, affix the type plate to the top right or left side panel where it can be clearly seen.

When the boiler is supplied ready-assembled, the type plate can be found in the combustion chamber accompanied by the assembly and maintenance instructions; when the boiler supplied in separate sections, it can be found in the transparent pocket on the burner door.

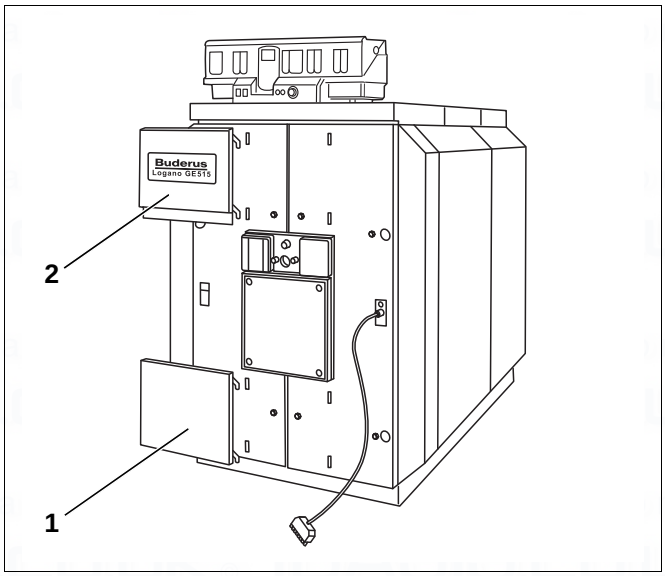

Fig. 58 Attaching the burner door panels

9 Boiler flue connection

This chapter explains how to connect the boiler to the flue.

9.1 Fitting the flue pipe sealing collar (accessory)

We recommend you use a flue pipe sealing collar (Fig. 59, [1]).

- Push the flue pipe (Fig. 59, [4]) as far as possible onto the flue gas header outlet (Fig. 59, [6]).
- Place the flue pipe sealing collar (Fig. 59, [1]) around the flue pipe (Fig. 59, [4]) and flue gas header outlet so that it overlaps at the top (Fig. 59, [6]).
- Place jubilee clips (Fig. 59, [5]) over the flue pipe sealing collar (Fig. 59, [1]). One of the jubilee clips (Fig. 59, [5]) must press onto the flue gas header outlet (Fig. 59, [6]) and and one onto the flue pipe (Fig. 59, [4]).
- Tighten jubilee clips (Fig. 59, [5]). The flue pipe sealing collar (Fig. 59, [1]) must fit smoothly and firmly in place.

- Retighten the jubilee clips if required.

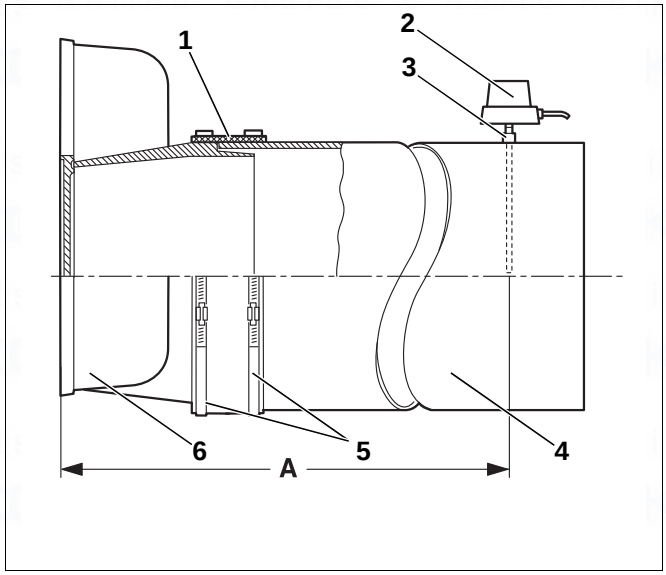

Fig. 59 Installing the flue pipe

1 Flue pipe sealing collar
2 Flue gas temperature sensor
3 Fem. connection
4 Flue
5 Jubilee clips
6 Flue gas collector

9.2 Fitting the flue gas temperature sensor (accessory)

- Weld the coupling (Fig. 59, [3]) into the flue pipe (Fig. 59, [4]) at a distance from the flue gas header (Fig. 59, [6]) which is twice the flue pipe diameter (A).
- Fit the flue gas temperature sensor (Fig. 59, [2]) as described in the separate installation manual.

10 Installing the control unit

This section explains how to install a Logamatic 4000 series control unit and a temperature sensor set.

DANGER: Risk of fatal injury from electric shock.

- Electrical work must only be carried out by registered electricians in possession of the necessary qualifications.
- Before opening the appliance, isolate all poles of the mains power supply and secure against unintentional reconnection.
- Please observe all installation instructions.

10.1 Installing the control unit

Fig. 60 shows the control unit and the front cover "A" from the rear.

- Undo both screws in the terminal cover (Fig. 60, [1]). Lift off the terminal cover.
- Put the control unit in place Fit the control unit at the front by inserting the locking tabs (Fig. 60, [4]) into the oval holes in the front boiler cover (Fig. 60, [5]). Pull the control unit forwards and then tip backwards. The resilient hooks (Fig. 60, [2]) must latch into the rectangular openings at the back of the front boiler cover (Fig. 60, [3]).
- Screw the base of the control unit on the left and right of the cable entry (Fig. 60, [6]) on the front boiler hood using two self-tapping screws (Fig. 60, [7]).

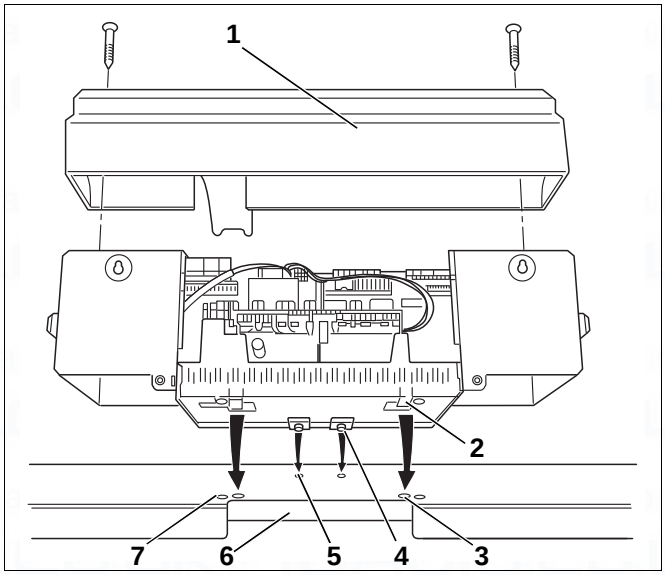

Fig. 60 Installing the control unit

10.2 Installation of the temperature sensor set and burner cable

Observe the following when connecting the control unit:

- Carefully route the cable ducts and capillary tubes.
- Never bend capillary pipes during installation.
- Work on electrical components of heating systems must only be carried out by suitably qualified personnel. If you are not suitably qualified, arrange for a qualified electrician to make the electrical connections.
- Observe the local regulations!

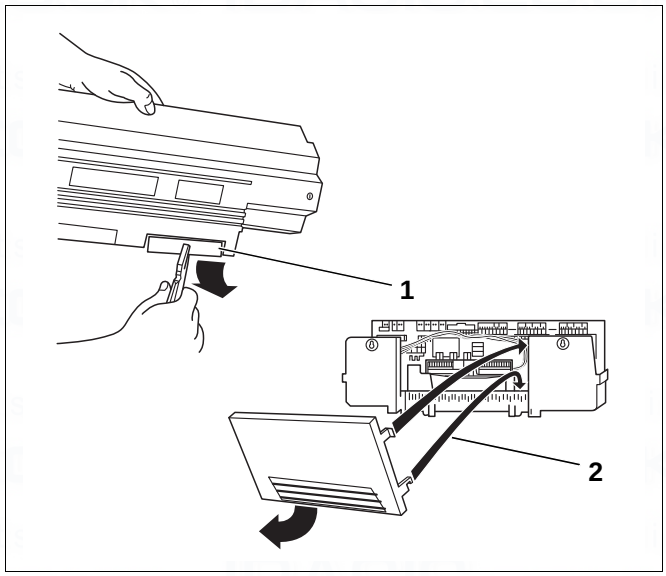

Fig. 61 Preparing the cable entry

- If necessary, make knock-outs (Fig. 61, [1]) in the rear panel of the cable entry (Logamatic 33xx) or remove the rear panel section (Logamatic 43xx) (Fig. 61, [2]).
- Route the capillary tubes through the cable entry and unroll to the required length.

The sensor well has already been sealed in the flow connection socket (→ Chapter 8.5 "Seal-in the sensor well", page 26).

The temperature sensor set connected to the control unit (consisting of three temperature sensors and one sensor blind piece Fig. 62, [1]) is installed in the sensor well R ¾.

- Route capillary pipe sensor to the measuring port of the boiler and then guide the sensor into the sensor well (Fig. 62, [2]) and secure with the retaining clip (Fig. 62, [3]).

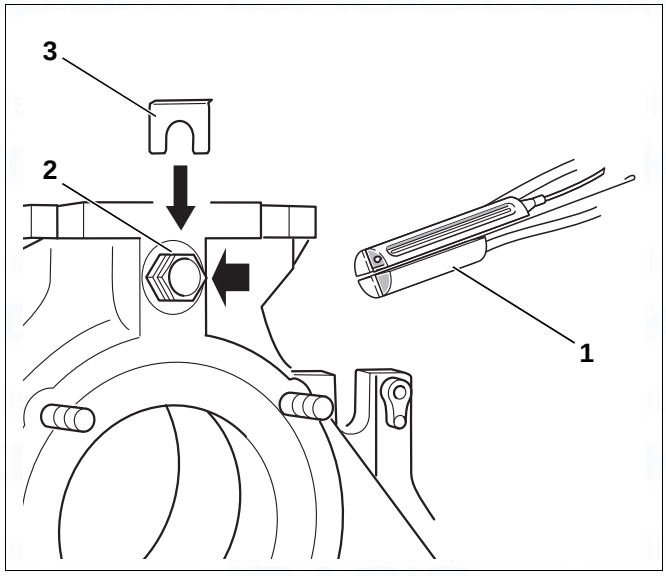

Fig. 62 Installing the temperature sensor set

- Screw cable entry (Fig. 63, [1] and [2]) to the left and right of the boiler rear panel.

A permanent connection must be made in accordance with EN 50165 or the relevant national installation standard.

- Establishing the electrical connection as shown in the wiring diagram. Take care to ensure correct cable and capillary tube routing.

- Secure all cables with cable clips.

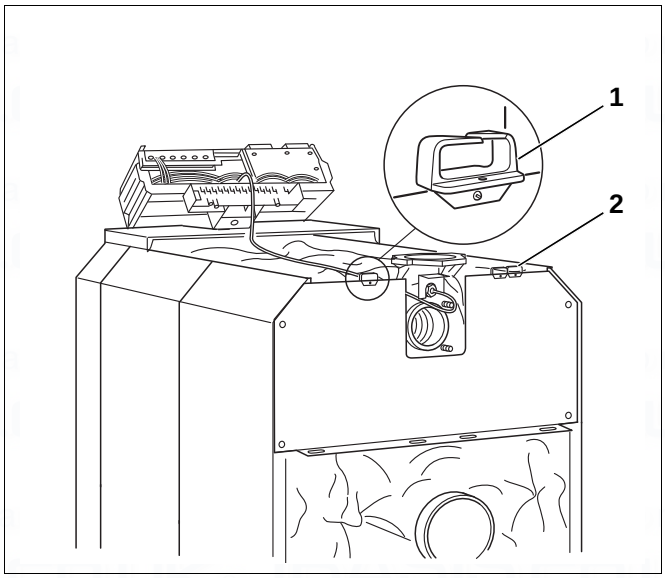

Fig. 63 Power supply

- Insert cable clips with cable inside into the clip frame and secure by clamping it with the tab (Fig. 64, [1]).

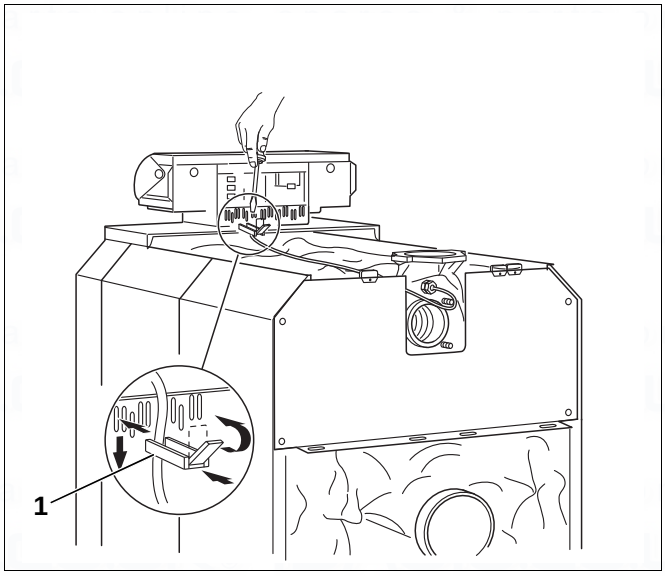

Fig. 64 Fastening the electrical leads

- Hook the lower hook on the rear panel section (Logamatic 43xx) into the clip frame and apply pressure at the top until the side hooks click into place (Fig. 61, [2]).
- Screw terminal cover (Fig. 60, [1]) with the two self-tapping screws back into the control unit base (Fig. 65).

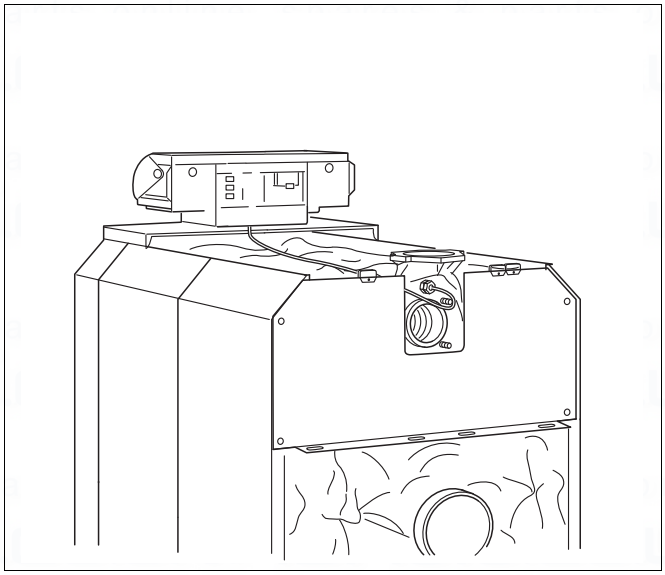

Fig. 65 Boiler with fitted control unit

11 Installing the burner

This chapter explains the basic steps involved in fitting a burner.

NOTICE: System damage through incorrect burner.

- Only use burners that comply with the technical requirements of the Logano GE515 (→ Chapter 4 "Specification", page 9).

- Close the burner door and seal with 4 machine screws (M16 × 140) (→ Chapter 8.8 "Installing fittings and burner door", Fig. 32, [3] to [6]). Tighten the machine screws evenly crosswise.

Predrilled and undrilled burner plates are available from Buderus upon request (accessory).

If you have ordered an undrilled burner plate from Buderus, you will have to machine this on site:

- Drill or cut the burner plate (Fig. 66, [1]) to match the required blast tube diameter (max. dia. 270 mm).
- Drill holes for fastening the boiler using the burner connecting flange as a template.
- Screw burner plate onto the burner door (seal with GP packing cord; diameter 10 mm).
- Screw the burner to the burner plate.
- Cut out insulating rings to match the blast tube diameter (Fig. 66, [2]).
- Fill the remaining gap between the burner door lagging and the blast tube (Fig. 66, [4]) using the appropriate insulating rings (Fig. 66, [3]).
- Connect the sight glass blower connection to the burner to ensure the sight glass remains clear of deposits.

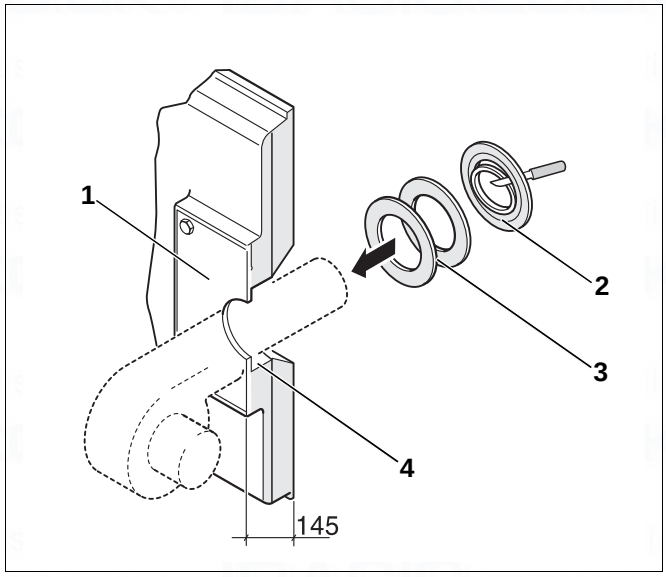

Fig. 66 Installing the burner (dimensions in mm)

12 System start-up

You can connect 4000 series control units to the Logano GE515. The commissioning process for the different types of control unit is the same.

NOTICE: Risk of boiler damage from contaminated combustion air!

- Ensure adequate ventilation.
- Do not use or store chlorinated cleaning agents or halogenated hydrocarbons (as contained in spray cans, solvents or cleaning agents, paints and adhesives for example) in the boiler room.
- Do not operate the heat generator when heavy dust contamination is present, e.g. following building work inside the boiler room.

- Complete the commissioning report (→ Chapter 12.6 "Commissioning report", page 52).

12.1 Filling the system

WARNING: Risk to health from potable water contamination!

- Always observe the regulations and standards applicable in your country for the prevention of contamination of potable water (e.g. by water from heating systems).
- Observe EN 1717.

NOTICE: Risk of system damage due to temperature stresses!

If you fill the heating system when it is hot, the resulting temperature stresses can cause stress cracks. The boiler will then leak.

- Only fill the heating system when cold (the flow temperature should be no more than 40 °C).
- During operation, only fill the heating system via the fill valve in the heating system pipework (return).
- Be mindful of the water quality specified in the operator's log, and enter the volume and the condition of the water filled into the system.

Refer to the table below for information about correct use and treatment of the fill and top-up water.

The table is taken from Code of Practice K8 "Water treatment for water heating installations" and VDI 2035 "Water treatment guidelines".

The pH value of the heating water increases after the heating system has been filled. After 3 – 6 months (at the time of the first service), check whether the pH value of the heating water has stabilised.

Total boiler output in kW	$Ca(HCO_3)_2$ concentration of fill and top-up water in mol/m³	Maximum quantity of fill and top-up water V_{max} in m³	pH value of heating water
100 < Q ≤ 350	≤ 2.0	V_{max} = three times system volume	8.2–9.5
350 < Q ≤ 1000	≤ 1.5		
100 < Q ≤ 350	> 2.0	$V_{max} = 0,0313 \cdot \frac{Q(kW)}{Ca(HCO_3)_2\left(\frac{mol}{m^3}\right)}$	8.2–9.5
350 < Q ≤ 1000	> 1.5		

Tab. 2 Requirements for fill, top-up and heating water

12.2 Making the system operational

Observe the following when commissioning:

- Vent your heating system via its radiators prior to commissioning.
- Check that the Hot gas baffles are correctly inserted (→ Chapter 8.8.5 "Inserting the hot gas baffle plates", page 32).

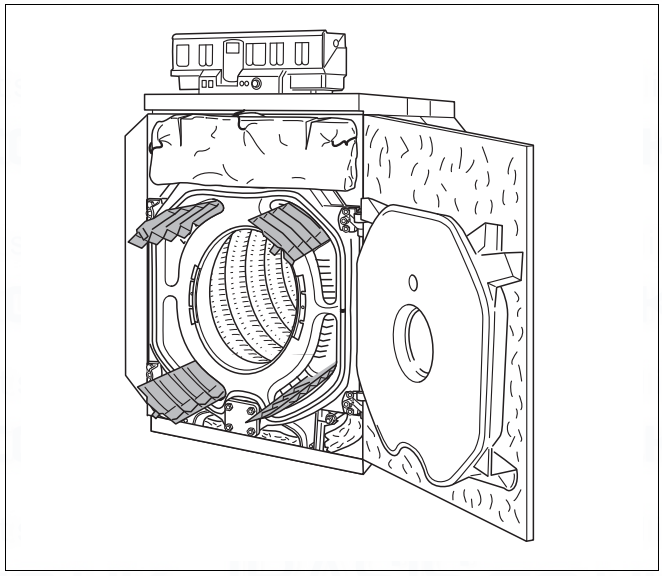

Fig. 67 Check the location of the hot gas baffle plates

12.3 Start up the control unit

Please see the accompanying technical documentation for the 4000 series control unit you are using for information on how to start it up.

12.4 Starting the burner

- When commissioning the burner, follow the installation and maintenance instructions enclosed with the burner.
- Complete the commissioning report in the burner documentation.

If you notice when taking measurements for the commissioning report that the flue gas temperature is too low for the flue pipe (risk of condensation), you can raise the flue gas temperature (→ Chapter 12.5 "Raising the flue gas temperature", page 50).

12.5 Raising the flue gas temperature

With a new boiler, the flue gas temperature when the boiler temperature is 80 °C will be around 160–180 °C, depending on the boiler rating.

In two-stage operation the temperature of the flue gas is lower.

You can increase the flue gas temperature further by removing individual hot gas check plates and Hot gas baffles or combinations of these.

> You should only consider modifying the hot gas check plates as a last resort as once you have reduced the size of the hot gas check plates you cannot change this back.

- Take the boiler out of operation in accordance with the operating instructions.

You can increase the temperature of the flue gas by carrying out the following measures.

12.5.1 Removing the hot gas baffle plates

With boiler ratings 7–11 (240–455 kW), you can raise the flue gas temperature by removing the top or bottom hot gas baffle plates **in pairs**.

12.5.2 Removing hot gas check plates

You can significantly increase the flue gas temperature by removing the hot gas check plates.

- Take the hexagon socket screws out of the hot gas check plates on the left and right (Fig. 68, [1] and [2]) and remove the hot gas check plates.

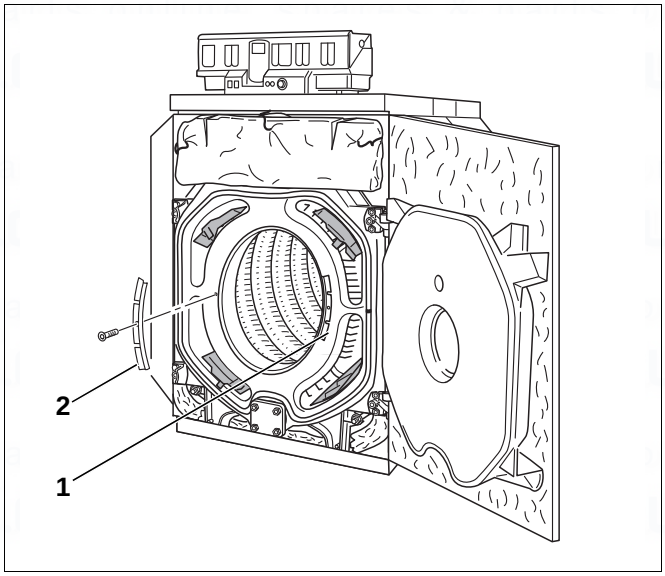

Fig. 68 Position of hot gas check plates

12.5.3 Increasing the flue gas temperature slightly

- Take the hexagon socket screw (Fig. 69, [3]) out of the hot gas check plate on the left and right (Fig. 68, [1] and [2])and remove the hot gas check plates.
- Place the hot gas check plate on the support with the channels (Fig. 69, [1] and [2]) facing downwards. Knock off one segment of the left and right hot gas check plate with a hammer.
- Screw the hot gas check plate back onto the front section with the hexagon socket screws.
- If the flue gas temperature increases by an insufficient amount, the second segment on the hot gas check plates can be broken off in the same way, or all hot gas check plates can be removed as described above.

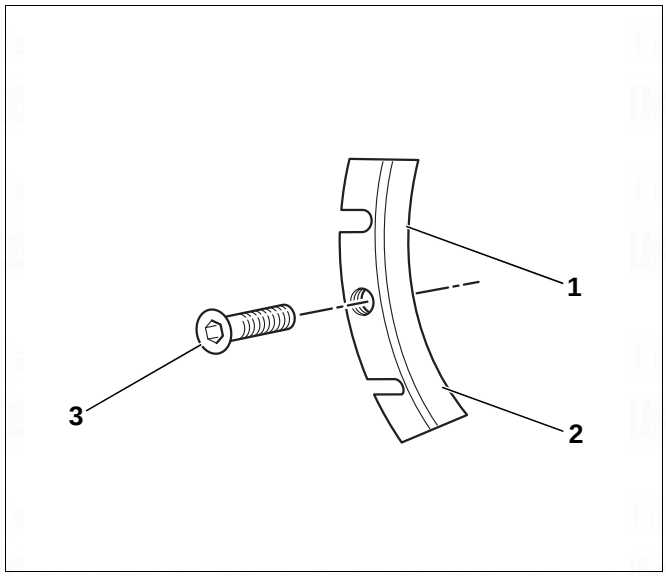

Fig. 69 Hot gas check plate

12.6 Commissioning report

The Logano GE515 can be used with an oil- or gas-fired burner. Fill in the commissioning report for the appropriate type of oil or gas burner carefully.

- Sign off all commissioning tasks when completed and enter the relevant date.

	Commissioning tasks	Page (individual steps)	Comments (signature)
1.	Fill the heating system with water	page 48	
2.	Vent the heating system via the radiators		
3.	Leak test performed?	page 27	
4.	Check the location of the hot gas baffle plates	page 49 page 32	
5.	Start up the control unit	page 49	
6.	Starting the burner	see burner documentation	
7.	Check the flue gas temperature	page 50	
8.	Provide the system user with information and hand over all relevant technical documentation		
9.	Confirm professional commissioning		
	Company stamp/signature/date		

- Enter the fuel to be used into the table (→ Operating Instructions "Foreword", page 2).

13 System shutdown

You can connect 4000 series control units to the Logano GE515. The commissioning process for the different types of control unit is the same.

NOTICE: System damage caused by frost!

The heating system can freeze up if it is out of use, e.g. due to a fault shutdown.

- Protect the heating system against frost when temperatures below zero are expected. Drain the heating water out of the system at its lowest point using the drain valve. To do this, open the air vent valve at the highest point in the system.

NOTICE: System damage caused by frost!

The heating system can freeze up during a power failure or if the power supply has been switched off.

- Check the "Control unit settings" to ensure the system remains operational (especially when there is a risk of frost).

13.1 Shutting down the heating system via the control unit

Shut down your boiler via the control unit. Switching off the control unit automatically also switches off the burner.

- Isolate the fuel supply to the burner.

13.2 Shutting down the boiler in an emergency

- Only in emergencies, switch off the system via the boiler room fuse or heating system emergency stop switch.

In other dangerous circumstances, isolate the main fuel shut-off valve and the electrical power supply of the system via the boiler room main fuse or the emergency stop switch for the boiler room.

- Isolate the fuel supply to the burner.

14 System inspection and maintenance

14.1 General information

Offer your customer an annual contract covering inspection and demand-dependent servicing. To find out what a contract for annual inspection and demand-based servicing covers, refer to Chapter 14.6 "Inspection and maintenance reports", page 61.

DANGER: Risk to life from the explosion of flammable gases!

- Work on gas components must only be carried out by qualified and authorised personnel.

DANGER: Risk of fatal injury from electric shock.

- Before opening the appliance, isolate all poles of the mains power supply and secure against unintentional reconnection.

You may order spare parts from the Buderus spare parts catalogue.

14.2 Why is regular maintenance important?

You should have your customer's system serviced for the following reasons:

- to maintain a high level of efficiency and to operate the system economically (low fuel consumption),
- to achieve a high level of operational reliability,
- to maintain the cleanest possible combustion.

14.3 Clean the boiler with cleaning brushes

- De-energise the system (→ Chapter 13 "System shutdown", page 53).
- Put the main power switch (Fig. 70, [1]) on the control panel in position "0".
- Isolate the fuel supply to the burner.

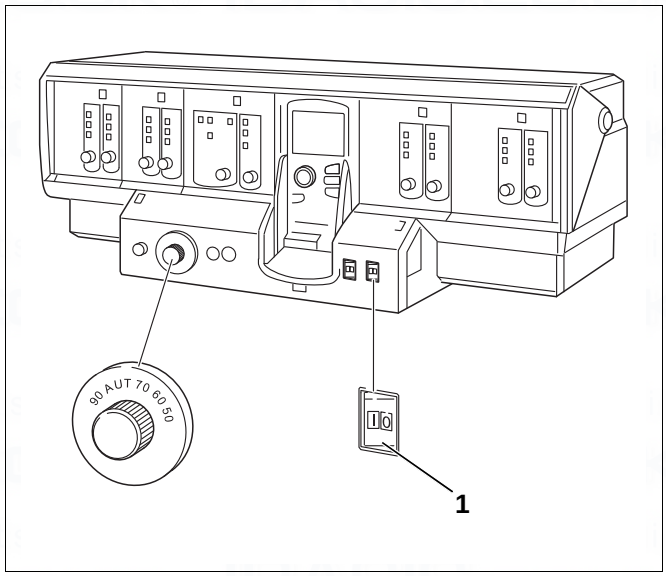

Fig. 70 Logamatic 4311 shown as example

- Undo the four machine screws that fasten the burner door to the front section (Fig. 71, [1] to [4]).
- Swing out burner door.

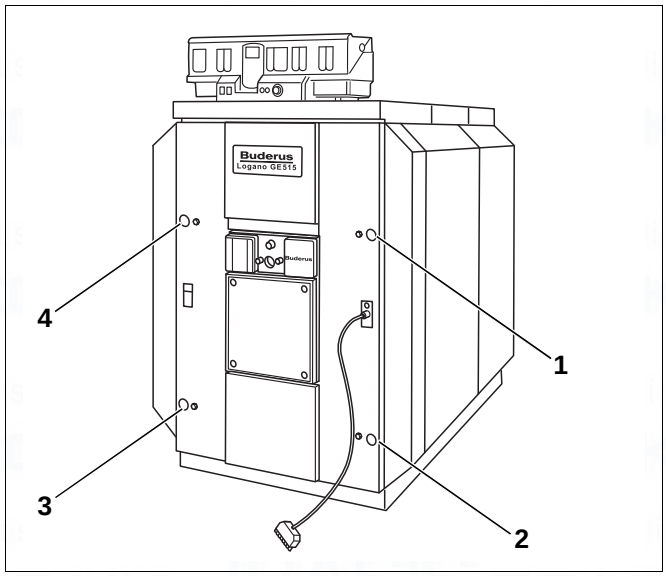

Fig. 71 Fastening the burner

- Take the hot gas baffle plates forwards out of the hot gas flues (Fig. 72, [1] to [4]).

Boilers rated at 510 with 12 boiler sections are not equipped with hot gas baffle plates. Hot gas baffle plates are used in boilers rated between 240 and 455 with 7–11 boiler sections (→ Chapter 8.8.5 "Inserting the hot gas baffle plates", page 32).

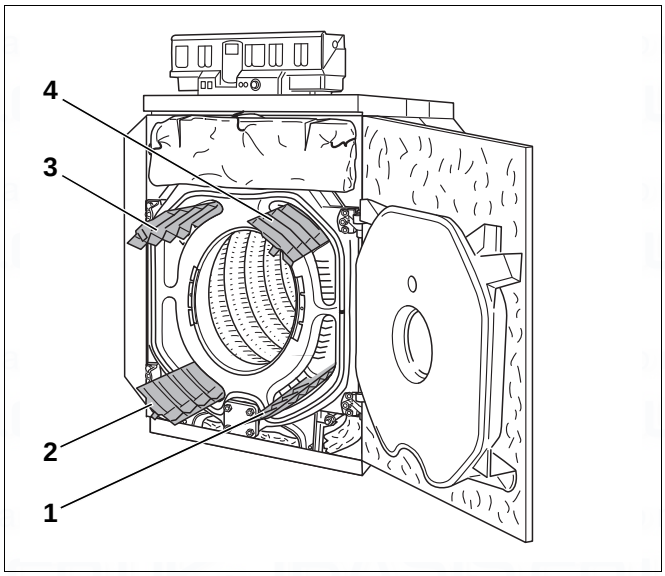

Fig. 72 Removing the hot gas baffle plates

The various brush types available from Buderus (accessories) are shown in Fig. 73.

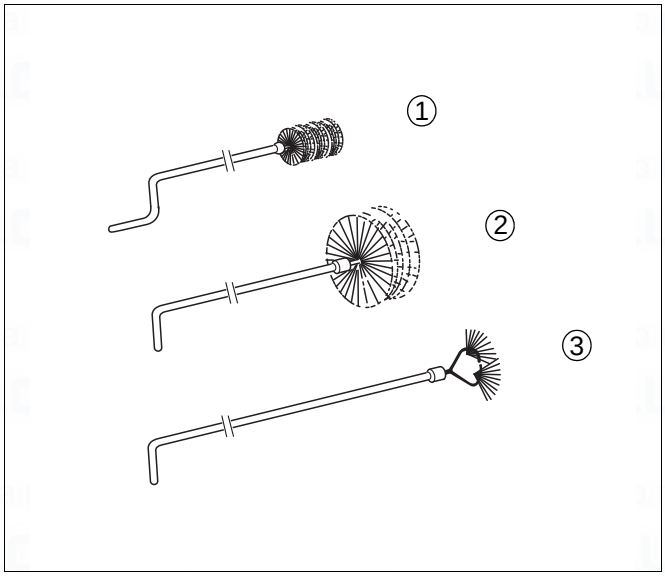

Fig. 73 Cleaning brushes

- Clean the hot gas flues, starting at the front and working towards the back with cleaning brushes 1 and 2 (Fig. 74, [1] and [3]).
- Clean the rear wall of the combustion chamber with cleaning brush 3.
- Clean the rest of the combustion chamber (Fig. 74, [2]) with cleaning brush 2.

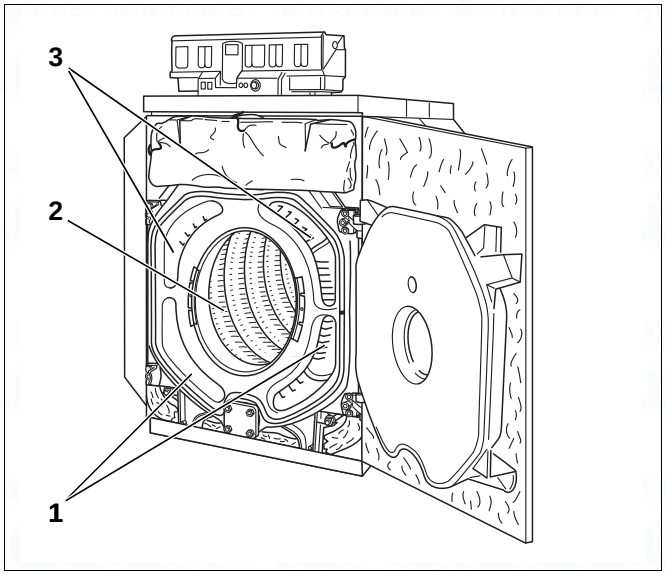

Fig. 74 Cleaning the hot gas flues

- Undo both self-tapping screws on the connecting plate and remove connecting plate.
- Remove the two self-tapping screws on the left and right-hand side of the lower boiler rear panel section.
- Lift up the bottom boiler rear panel sections slightly and take out towards the rear.
- Undo the tensioning springs below the flue outlet, fold up the thermal insulation and attach via the spring hooks (Fig. 75, [1]).
- Remove the cleaning access covers from the rear section (Fig. 75, [2]) and flue gas header (Fig. 75, [3]).
- Remove all loose combustion residues from the combustion chamber, the hot gas flues and the flue gas header.
- Check packing cords on the clean-out openings and burner door. Replace damaged or hardened packing cords.

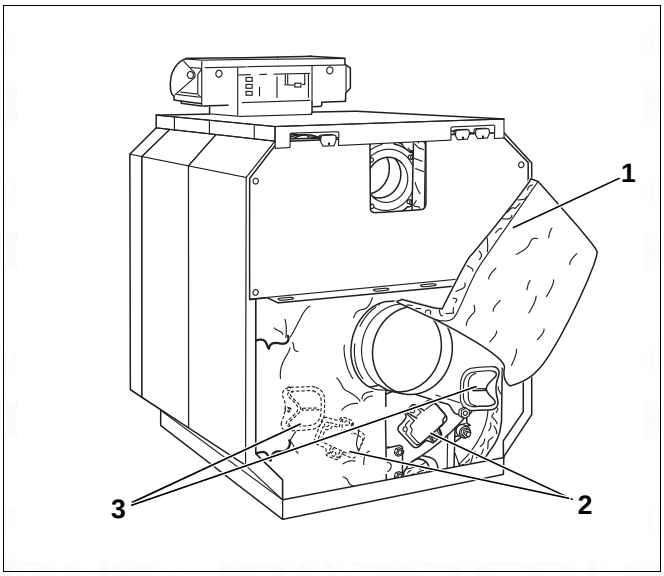

Fig. 75 Removing the cleaning access cover.

You can obtain packing cords from your nearest branch.

- Clean hot gas baffles with the cleaning brushes.
- Insert the hot gas baffle plates in the hot gas flues (→ Chapter 8.8.5 "Inserting the hot gas baffle plates", page 32).
- Fasten cleaning access cover and close burner door. Tighten screws evenly.
- Fold the rear section lagging down and pull together under the flue outlet using the tensioning spring (Fig. 76, [1]).
- Hang the bottom boiler rear panel sections on the left and right into the slots in the folded edge of the upper boiler rear panel and the side panel and screw the connecting plate below the flue outlet onto the bottom boiler rear sections.

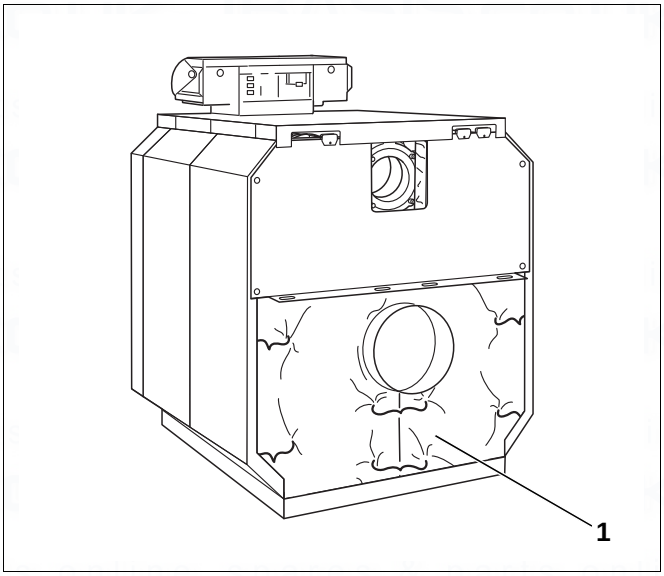

Fig. 76 Pull rear section lagging together

14.4 Wet-cleaning the boiler

When wet-cleaning, use a cleaning agent appropriate for the level of contamination.

Proceed with the wet cleaning in the same order as described for cleaning with brushes (→ Chapter 14.3 "Clean the boiler with cleaning brushes", page 55).

- For wet-cleaning (chemical cleaning), observe the operating instructions of the relevant cleaning equipment and cleaning agent.
  It may be necessary to vary the wet-cleaning process from that described here.

- Select a cleaning agent that is appropriate for the type of contamination (soot or encrustation).
- Cover the control unit with foil to prevent ingress of the cleaning agent.
- Spray cleaning agent evenly from the top into the hot gas flues
- Heat up the boiler to a boiler water temperature of at least 70 °C.
- Brush out the hot gas flues.

14.5 Checking the system water pressure

A distinction is generally made between open vented and sealed unvented systems. In practice, open vented systems are seldom installed nowadays. We will therefore be using a sealed system to demonstrate how you can check the water pressure.

Open vented systems

In open systems, the hydrometer needle (Fig. 77, [1]) must lie within the red field (Fig. 77, [3]).

Sealed pressurised systems

In sealed systems, the pressure gauge needle (Fig. 78, [2]) must be within the green field (Fig. 78, [3]). Set the red needle (Fig. 78, [1]) on the pressure gauge to the required system pressure.

- Bring the system up to the required operating pressure.

- Set the pressure gauge needle accordingly.
- Check the system water pressure.

NOTICE: Risk of system damage due to frequent topping-up!

The system may be damaged, depending on water quality, by corrosion or scaling, if you frequently need to re-fill your system with make-up water.

- Make sure that all air has been removed from the heating system.
- Check the heating system for leaks and the function of the expansion vessel.

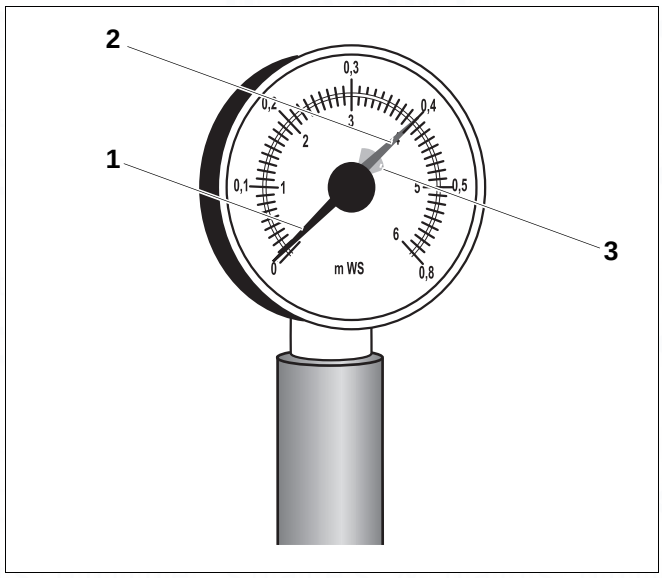

Fig. 77 Hydrometer for open systems

1 Hydrometer needle

2 Green needle

3 Red band

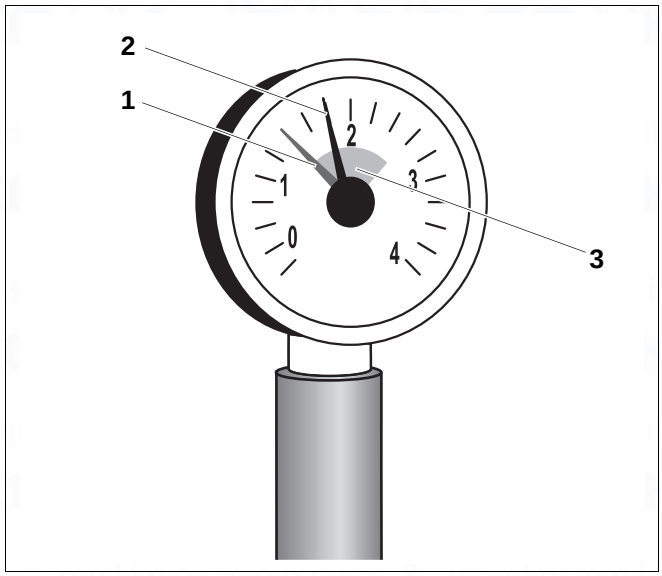

Fig. 78 Pressure gauge for sealed unvented systems

1 Red needle

2 Pressure gauge needle

3 Green band

The water pressure in the system is too low if the pressure gauge needle (Fig. 78, [2]) falls below the green mark (Fig. 78, [3]). Then re-fill the heating system with top-up water (→ Chapter 12.1 "Filling the system", page 48).

NOTICE: Risk of system damage due to temperature stresses!

- When the heating system is in operation, never fill it via the boiler drain & fill valve. Instead, only use the filling valve in the heating system (return).

- Top up with water via an WRAS approved filling method.
- Vent the heating system.
- Check the water pressure once more.

14.6 Inspection and maintenance reports

The inspection and maintenance reports provide an overview of the required inspection and maintenance work.

Complete these reports after inspections and maintenance.

- Sign and date the completed inspection work.

	Inspection work	Page (individual steps)	Comments
1.	Check general system condition		
2.	Visual and function check of the system		
3.	Check the components in contact with fuel and water throughout the system for the following: – leaks – visible signs of corrosion – signs of ageing		
4.	Check the combustion chamber and the heating surface for contamination; shut down the heating system for this step	page 55	
5.	Check the function of the burner	see burner documentation	
6.	Check the flue gas piping for function and safety.	see burner documentation	
7.	With closed systems, check the water pressure and inlet pressure of the membrane pressure expansion vessel	page 59	
8.	Check water pressure and inlet pressure on open systems	page 59	
9.	Check the function of the DHW cylinder and sacrificial anode	see documents for DHW storage tank	
10.	Check the control unit settings are correct	see control unit documentation	
11.	Final inspection check; take measurements and document figures and test results		

Confirm professional inspection with signature, date and company stamp			

	Demand-dependent maintenance work	Page (individual steps)	Comments
1.	System shutdown	page 53	
2.	Remove and clean the hot gas baffle plates	page 56	
3.	Clean hot gas flues (heating surfaces)	page 56	
4.	Clean the combustion chamber	page 56	
5.	Cleaning the flue gas collector	page 56	
6.	Insert the hot gas baffles	page 32	
7.	Check gaskets/packing cords on the burner and burner door and replace if required	see burner documentation	
8.	System start-up	page 48	
9.	Final checks of the maintenance work; take measurements and document figures and test results	see burner documentation	
10.	Check the function and operational safety	see burner documentation	

Confirm professional maintenance with signature, date and company stamp			

15 Correcting burner faults

Heating system faults are output on the control unit display. You will find detailed information regarding fault displays in the service instructions for the relevant control unit. The burner fault is also indicated by a fault lamp on the burner.

NOTICE: System damage through frost!

The heating system can freeze up if it has been switched off through a fault shutdown.

- Rectify the fault immediately and restart the heating system.
- Where that is not possible, drain the heating and DHW pipework at the lowest point.

NOTICE: System damage due to the reset button being pressed too frequently.

The burner ignition transformer may be damaged if you press the reset button more than three times in succession when the burner refuses to start.

- Do not attempt to remedy the fault by pressing the reset button more than three times in succession.

- Press the burner reset button (→ burner operating instructions).

If the burner does not restart after three attempts, refer to the technical documentation provided with the burner to find out how to reset it.

16 Index

B

Boiler 14, 25
Boiler block length 9
Boiler conditions of use 4
Boiler sections 9
Boiler size 9, 10
Boiler water content 9
Burner door depth 9

C

Carrying 27
Casing 38
Cleaning 56
CO_2 content 10
Combustion chamber diameter 9
Combustion chamber length 9
Combustion output 9
Compression tool 14
Control unit 8

D

Draught 10

F

Feed pipe 26
Fill water 49
Fitting 26, 29, 37
Fitting clearance 9
Flow temperature 4, 10
Flue gas mass flow rate 10
Flue gas temperature 10
Fuels 4

G

Gas content 9

H

Handling 12
Hot gas baffle plates 32
Hot gas check plates 32

I

Inspection contract 54
Installation aid 18
Installing 41, 43, 47

M

Maintenance contract (as-required basis) 54

O

Operating pressure 10
Operating pressure, maximum 4
Overall boiler length 9

P

Positioning 30
Preparing 21
Pressure drop on the hot gas side 10
Product description 8

R

Rated output 9
Rear section 18
Remove 18
Replenishment water 49

S

Specification 9

T

Temperature controller 4
Thermal insulation 8, 35

W

Weight 9

Notes

spares & parts online IBASIS.CO.UK

Notes

spares & parts online IBASIS.co.uk

Notes

spares & parts online IBASIS.co.uk

Buderus

Cotswold Way, Warndon, Worcester WR4 9SW
Customer service: 0844 892 3004
Technical support: 0844 892 4224

www.buderus-commercial.co.uk

In the UK and IE, Buderus is a brand name
of Bosch Thermotechnology Ltd.

Bosch Thermotechnik GmbH
Sophienstrasse 30-32
D-35576 Wetzlar
www.buderus.de
info@buderus.de

C & F Quadrant Ltd.
Unit L40 Cherry Orchard Industrial Estate
Cherry Orchard, Dublin 10
Tel.: 01.6305700
Fax.: 01.6305706 / 01.6305715
www.cfquadrant.ie
E-mail: sales@cfquadrant.ie

Middle East and Caucasian Area

Bosch Termoteknik Dış Ticaret A.Ş.
İstanbul Deri ve Endüstri Serbest Bölgesi
T-10 Parsel 34975 Tuzla
İstanbul / Turkey
Tel.: +90 216 581 03 00

Products manufactured by
Bosch Thermotechnik GmbH
Sophienstrasse 30-32
D-35576 Wetzlar

www.buderus.com

Buderus

spares & parts online BASIS.CO.UK