Installation and servicing instructions

High efficiency cast iron

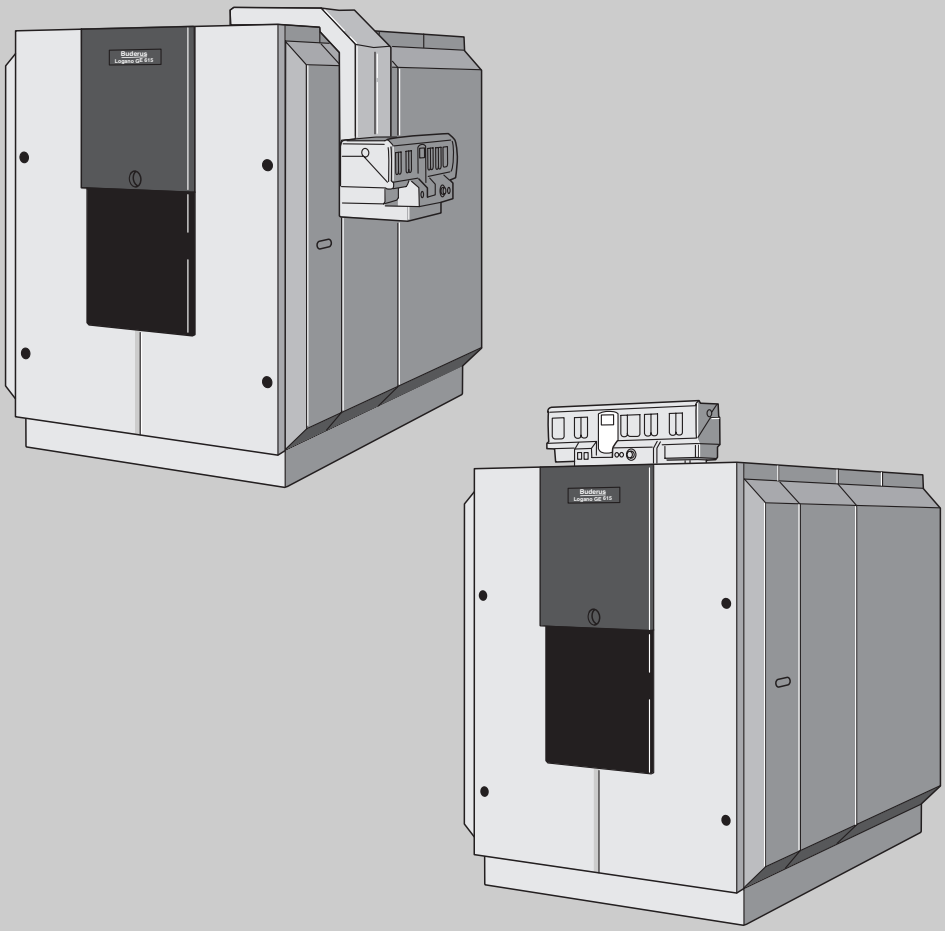

Logano GE615

For contractors

Read carefully before carrying out installation and maintenance.

6 720 643 662 (03/2010) GB/IE/LB

Buderus

spares & parts online IBASIS.CO.UK

Contents

1	**Key to symbols and safety instructions**	**3**
1.1	Explanation of symbols	3
1.2	Safety instructions	3
2	**Product information**	**5**
2.1	Product overview	5
2.2	Correct use	5
2.3	EU Declaration of Conformity	5
2.4	Operating conditions for Buderus G and GE cast iron boilers	6
2.4.1	Operating conditions GE 615	6
2.5	Specification	7
2.6	Accessories	9
3	**Regulations**	**10**
3.1	Installation location	10
3.2	Quality of heating water	10
3.3	Disposal and recycling	10
4	**Installation**	**10**
4.1	Checking the delivery for completeness	10
4.1.1	Delivery as a pre-assembled block	10
4.1.2	Delivery in loose sections	10
4.2	Tools and accessories	11
4.3	Recommended wall clearances	11
4.3.1	Base and boiler plinth	12
4.4	Assembling the boiler block	12
4.4.1	Arrangement of boiler sections	12
4.4.2	Joining the boiler block assembly	13
4.5	Setting up the boiler block – (when supplied as a pre-assembled block)	18
4.6	Inserting the feed pipe (parts case)	18
4.7	Sealing the sensor well (fittings case)	19
4.8	Inserting the outer steam tube (fittings case)	19
4.9	Boiler block pressure test (only when supplied in loose sections)	20
4.9.1	Preparing for pressure test	20
4.9.2	Perform pressure test	20
4.9.3	Leaking hub joint	20
4.10	Boiler water connections	21
4.11	Installing fittings and burner door (delivery in loose sections)	22
4.11.1	Positioning the flue gas header	22
4.11.2	Fitting clean-out cover onto rear section	22
4.11.3	Installing the burner door	23
4.11.4	Inserting the hot gas baffle plates	23
4.12	Filling the heating system and checking for leaks	25
4.13	Installing the burner	26
4.14	Boiler flue connection	27
4.14.1	Fitting the flue pipe sealing collar (accessory)	27
4.14.2	Fitting the flue gas temperature sensor (accessory)	27
4.15	Installing the boiler casing	27
4.15.1	Fitting the thermal insulation	27
4.15.2	Fitting the connection plates	28
4.15.3	Fitting side panels and hoods	31
4.16	Making the electrical connection	33
4.16.1	Installing the control unit	33
4.16.2	Installing the temperature sensor set	35
5	**Commissioning the heating system**	**36**
5.1	Preparing the heating system for operation	36
5.1.1	Creating operating pressure (sealed heating systems)	37
5.1.2	Setting the capacity (open heating systems)	37
5.2	Start up the control unit	37
5.3	Starting the burner	37
5.4	Start-up report	38
6	**Shutting down the heating system**	**39**
6.1	Standard shutdown	39
6.2	In an emergency	39
7	**Heating system inspection and maintenance**	**40**
7.1	Why is regular maintenance important?	40
7.2	Preparing the boiler for cleaning	40
7.3	Cleaning the boiler	40
7.3.1	Clean the boiler with cleaning brushes	40
7.3.2	Wet cleaning (chemical cleaning)	43
7.4	Checking the operating pressure	44
7.4.1	Checking the operating pressure (sealed systems)	45
7.4.2	Checking the fill level (open systems)	45
7.5	Inspection and maintenance reports	46
8	**Faults**	**49**

1 Key to symbols and safety instructions

1.1 Explanation of symbols

Warnings

⚠	Warnings in this document are framed and identified by a warning triangle which is printed on a grey background.

⚠	Electrical hazards are identified by a lightning symbol surrounded by a warning triangle.

Keywords indicate the seriousness of the hazard in terms of the consequences of not following the safety instructions.

- **NOTICE** indicates that material damage may occur.
- **CAUTION** indicates that minor to medium injury may occur.
- **WARNING** indicates that serious injury may occur.
- **DANGER** indicates possible risk to life.

Important information

Important information in cases where there is no risk of injury or material losses is identified by the symbol shown on the left. It is bordered by horizontal lines above and below the text.

Additional symbols

Symbol	Meaning
▶	a step in an action sequence
→	a reference to a related part in the document or to other related documents
•	a list entry
–	a list entry (second level)

Tab. 1

1.2 Safety instructions

These installation and maintenance instructions contain important information for the safe and appropriate installation, commissioning and servicing of this Logano GE615 forced draft boiler.

These installation and maintenance instructions are designed for specialists who – through their vocational training and experience – are knowledgeable in handling heating systems and gas installations.

Observe all standards and guidelines applicable to the installation and operation of this system in your country.

Only use original Buderus spare parts. Losses caused by the use of parts not supplied by Buderus are excluded from the Buderus warranty.

Risk to life from gas explosion

There is a risk of explosion if you can smell gas!

- ▶ No open fire. Do not smoke. Do not use lighters.
- ▶ Prevent sparks. Do not operate electrical switches, including telephones, plugs or doorbells.
- ▶ Close the main gas shut-off valve.
- ▶ Open windows and doors.
- ▶ Warn all occupants of the building, but do not ring doorbells.
- ▶ Do call your gas supplier from outside the building.
- ▶ If you hear gas escaping, immediately leave the building, prevent others from entering and notify the police and fire brigade from outside the building.

Customer information:

- ▶ Only qualified personnel may carry out the installation, the main fuel and flue gas connections, the initial start-up, electrical connections and any maintenance or repair work.
- ▶ Only registered gas fitters may carry out work on gas components.

Risk to life from poisoning

Insufficient ventilation can lead to dangerous flue gas leaks!

- ▶ Never block ventilation and extract air apertures or reduce their size.
- ▶ The boiler must not be operated, unless you immediately remedy the fault.
- ▶ Inform the system user in writing of the fault and its associated risks.

Risk to life from electric shock when the appliance is open

- Isolate the heating system from the mains electricity supply before starting work. Use either an emergency isolation switch or the relevant circuit breaker.
  A contact separation of at least 3mm must be achieved across EACH pole.
- Safeguard the heating system against unintentional reconnection.

Risk of fire through flammable materials or liquids

- Never store flammable materials or liquids in the immediate vicinity of the heat source.

Risk of system damage through incorrect installation

- The appliance must be installed in accordance with and comply to, the current: Statutory Instrument Laws, Gas Safety Regulations, IEE Regulations, Building Regulations, Local Water By-Laws, Health & Safety document 635 (The Electricity at Work Regulations) and any other local requirements. Observe all European and local installation standards, building regulations and the latest edition of the wiring regulations. Chemically aggressive substances, can corrode the appliance and invalidate any warranty.

System damage through unsatisfactory cleaning and maintenance

- Carry out cleaning and maintenance procedures annually. In the course of this work, check the entire heating system including the neutralising system for correct function.
- Immediately remedy all faults to prevent system damage.

System damage through frost

The heating system may freeze in cold weather if the control unit is switched off.

- If there is a risk of frost, protect your heating system against frost damage. With the control unit switched OFF, drain the water from the boiler, DHW cylinder and all heating system pipework.

System damage and personal injury through operating faults

Operator errors can lead to injuries and/or material losses.

- Ensure that children never operate this appliance unsupervised or play with it.
- Ensure that only individuals who can operate this appliance correctly have access to it.

Instructing the customer

- Hand these installation and maintenance instructions to the customer.
- Explain to the customer the function and operation of the appliance.

2 Product information

2.1 Product overview

This boiler is a low temperature boiler that complies with BS EN 303 for oil or gas combustion with modulating boiler water temperature control and no minimum return temperature.

The main components of the Logano GE615 forced draught are:

- The boiler block transfers the heat generated by the burner to the heating water.
- The boiler shell and lagging prevent energy loss.
- The control unit serves to monitor and control all electrical boiler components.

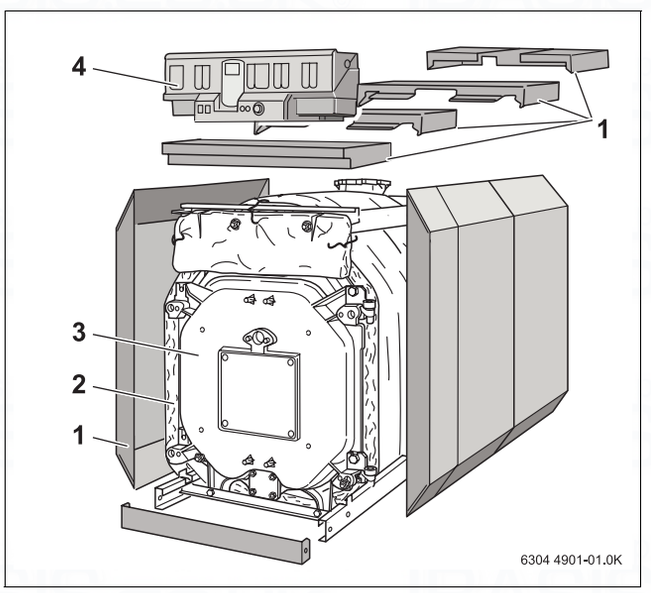

Fig. 1 Logano GE615 fan-assisted boiler

1 Boiler shell (casing)
2 Thermal insulation
3 boiler block
4 Control unit

2.2 Correct use

The Logano GE615 forced draught boiler is intended for generating heating water. You may use any type-tested oil or gas fired burners to EN 267 or EN 676 provided their operating range meets the boiler specification.

Any other use is deemed to be inappropriate. Any resulting damage is excluded from the manufacturer's warranty.

2.3 EU Declaration of Conformity

This product conforms in design and operation to the European Directives and the supplementary national requirements. Its conformity is confirmed by the CE designation.

You can call up the Declaration of Conformity for this product on the internet at www.buderus.de/konfo or request a copy from your local Buderus sales office.

2.4 Operating conditions for Buderus G and GE cast iron boilers

2.4.1 Operating conditions GE 615

Operating conditions GE 615

Thermostream technology is a unique feature of Buderus cast iron boilers. Return water is preheated and mixed within the boiler before it comes in contact with the heated surface of the combustion chamber. The Thermostream technology ensures there is an even temperature distribution in the boiler and avoids condensate forming within the combustion chamber. This reduces thermal stress, the main cause of failure of normal cast iron boilers. The benefit of this technology is that if the minimum boiler operating temperature of the boiler is maintained (see table below), there is no need for a conventional shunt pump to be installed, saving the cost of a pump, the electricity it consumes and the breakdown it can cause. The minimum boiler operating temperature as shown in the table below must be reached within 10 minutes and then be maintained while the burner is running.

Boiler controls	Minimum flow rate through the boiler	Minimum return water temperature	Minimum boiler operating temperature for oil	Minimum boiler operating temperature for gas	Other conditions
Buderus 4000 with control over all heating circuits	none	none	50 degrees[1)]	50 degrees[1)]	none
Where the Buderus control is not controlling the heating circuits ie External control (BMS) or Constant temperature control with Buderus 4212 with ZM427	none	none	50 degrees[1)]	50 degrees[1)]	none

Tab. 2

[1)] This temperature has to be reached within ten minutes of the burner starting and has to be maintained whilst the burner is firing.

This operating condition can be easily achieved by the controls monitoring the boiler temperature and reducing the flow rate through the boiler until the required temperature is reached. This is then maintained by continuing to control flow based on the boiler temperature. The controls can reduce the flow rate by closing the valves on the mixed heating circuits or by modulating the boiler primary pumps or by closing the motorised butterfly valves or 3 port mixing valves on a cascade system or by having a 3 port motorised valve in the boiler return on a single boiler installation. The Buderus 4000 series controls can manage this process or it can be done by the BMS.

Failure to ensure that the operating condition is maintained may lead to thermal stress in the boiler and eventual failure of the sections which would be outside the scope of the warranty.

Please contact your local Buderus sales office for further advice.

2.5 Specification

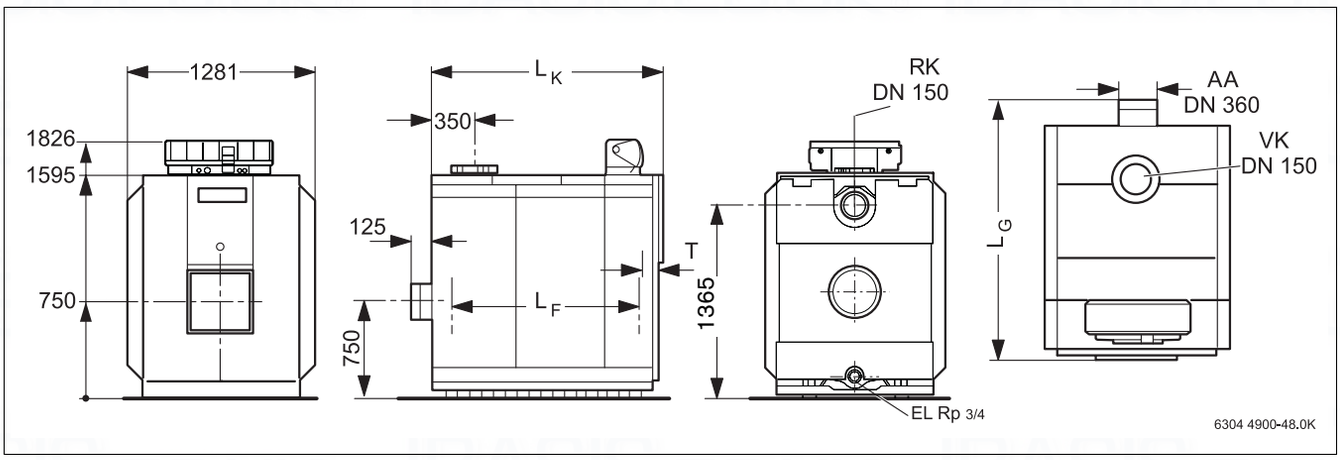

Fig. 2 Connections and dimensions

Specification and dimensions									
Boiler size	**kW**	570	660	740	820	920	1020	1110	1200
Boiler sections	**Quantity**	9	10	11	12	13	14	15	16
Rated output	**kW**	511 – 570	571 – 660	661 – 740	741 – 820	821 – 920	921 – 1020	1021 – 1110	1111 – 1200
Combustion output	**kW**	546.6 – 616.2	610.7 – 713.5	707.0 – 800.0	792.5 – 886.5	878.1 – 994.6	985.0 – 1102.0	1092.0 – 1200.0	1188.0 – 1297.0
Overall boiler length (L_G)	**mm**	1926	2096	2266	2436	2606	2776	2946	3116
Length of boiler block (L_K)	**mm**	1804	1974	2144	2314	2484	2654	2824	2994
Loose boiler section transport unit	**mm**	Width 1096/height 1640/depth 170							
Boiler block transport unit	**mm**	Width 1096/height 1640/length LK							
Combustion chamber length (L_F)	**mm**	1525	1695	1865	2035	2205	2375	2545	2715
Combustion chamber diameter	**mm**	680							
Burner door depth	**mm**	145							
Net weight[1)]	**kg**	2505	2747	2990	3232	3475	3710	3953	4147

Tab. 3 Specifications and dimensions
1) Weight excluding packaging 4 – 5 % lower.

Specification and dimensions									
Water content	**l**	561	621	681	741	801	861	921	981
Gas content	**l**	922	1027	1132	1237	1342	1447	1552	1657
Flue gas temperature[1] partial load 60 %	**°C**	140							
Flue gas temperature[1] full load	**°C**	170 – 180							
Flue gas mass flow rate, oil, partial load 60 %	**kg/s**	0.1537	0.1778	0.1995	0.2207	0.2479	0.2750	0.2992	0.3234
Flue gas mass flow rate, oil, full load[2]	**kg/s**	0.2320 – 0.2615	0.2592 – 0.3028	0.3001 – 0.3396	0.3364 – 0.3763	0.3727 – 0.4222	0.4181 – 0.4678	0.4635 – 0.5093	0.5043 – 0.5505
Flue gas mass flow rate, gas, partial load 60 %	**kg/s**	0.1542	0.1785	0.2002	0.2215	0.2488	0.2760	0.3003	0.3246
Flue gas mass flow rate, gas, full load[2]	**kg/s**	0.2328 – 0.2625	0.2602 – 0.3039	0.3012 – 0.3408	0.3376 – 0.3776	0.3741 – 0.4237	0.4196 – 0.4694	0.4652 – 0.5112	0.5061 – 0.5525
CO_2 content, oil	**%**	13							
CO_2 content, gas	**%**	10							
Required draught	**Pa**	0							
Pressure drop on the hot gas side	**mbar**	2.4	3.4	4.2	4.2	4.1	4.5	5.4	5.8
Permissible flow temperature[3]	**°C**	100 – 120[4]							
Permissible operating pressure	**bar**	6							
Maximum time constant T on thermostat	**s**	40							
Maximum time constant T on monitor/limiter	**s**	40							

Tab. 4 Specifications and dimensions

[1] According to BS EN 303. The minimum flue gas temperature for the chimney calculation acc. to DIN 4704 is approx. 12 K lower.

[2] The information for full load refers to the upper and lower rated heat output range.

[3] Safety limit (high limit safety cut-out). Maximum possible flow temperature = safety limit (STB) – 18 K. Example: Safety limit (STB) = 100 °C, max. possible flow temperature = 100 – 18 = 82 °C.

[4] According to country-specific standards and regulations (for all countries)

Country:	All countries			
Fuels	Oil Fuel Class D Gasoil and Class C Kerosene	LPG	Natural gas	Biogas (special conditions of use) Consult your local Buderus sales office for advice
Remarks	The boiler can only be operated with the specified fuels. Carry out maintenance and cleaning procedures annually. Check that the entire system is functioning correctly. Immediately remedy all defects found.			

Tab. 5 Fuels

2.6 Accessories

Please see the current sales information for details of accessories.

Use only original parts.

3 Regulations

Observe all standards and directives applicable to the installation and operation of this heating system in the country in which it is used.
The information on the type plate is binding and must be observed.

3.1 Installation location

NOTICE: System damage due to frost!

- Site the heating system in a room safe from the risk of frost.

3.2 Quality of heating water

- The operator's log enclosed with the specifications MUST be observed when using and treating fill and top-up water.
- Record the filling water quantity and composition in the operator's log.

3.3 Disposal and recycling

- If any heating system components need to be replaced, they should be disposed of in an environmentally responsible manner, via an approved disposal site.
- Dispose of packaging in an environmentally responsible manner.

4 Installation

4.1 Checking the delivery for completeness

The boiler can be delivered either as a pre-assembled block or in loose sections.

- After delivery, check all packaging is in perfect condition.
- Check all components have been delivered.

4.1.1 Delivery as a pre-assembled block

Component	Pce	Packaging
Boiler block	1	Pallet
Furniture	1	Case
Fixing elements	1	Case
Casing Pack A	1	Case
Casing Pack B	1	Case
Thermal insulation	1	Foil bag

Tab. 6 Scope of supply (block delivery)

4.1.2 Delivery in loose sections

Component	Pce	Packaging
Front, rear, central sections with upper flow connection and burner door	1	Pallet
Central sections (depending on boiler size)	2 – 5	Pallet
Base unit fittings, 9 – 16 sections	1	Case
Supplementary fittings (contents depend on the size of the boiler)	1	Case
Fixing elements	1	Case
Casing Pack A	1	Case
Casing Pack B	1	Case
Thermal insulation	1	Foil bag
Set of anchor rods with spring packages		

Tab. 7 Scope of supply (loose sections)

4.2 Tools and accessories

The following tools and auxiliary materials are required for the boiler assembly (the listed items are not contained in the scope of supply).

- Boiler compression tool 2.3
- Installation kit (accessory)
- Steel hammer and wooden or rubber mallet
- Half-round bastard file
- Screwdriver (Philips and flat head)
- Flat chisel, support wedge, flat iron
- Spanners, sizes 13 mm, 19 mm, 24 mm and 36 mm, and socket size 19 mm
- Cleaning rags and cloth
- Fine emery cloth
- Wire brush
- Lubricating oil
- Solvent (petrol or solution)
- Spirit level, ruler, chalk, straight edge

Sections	Compression tool(s) per boiler hub	Extension(s) per boiler hub	Length (total) mm
9 – 16	1	3	3080

Tab. 8 Boiler compression tool size 2.3 (complete in the toolbox)

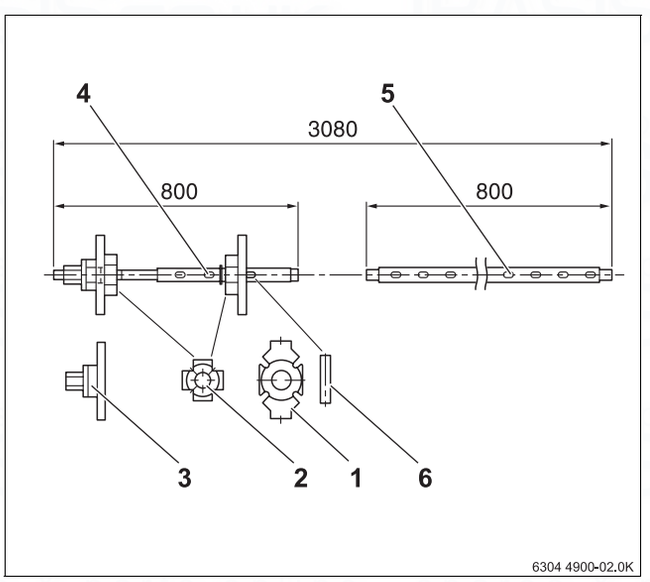

Fig. 3 Boiler compression tool 2.3 (dimensions in mm)

1 Mating flange
2 Additional flange
3 Compression unit
4 Pull rod
5 Extension
6 Wedge (size 2.3)

4.3 Recommended wall clearances

Observe the recommended wall clearances for easier boiler installation, cleaning and maintenance. Adhere to the minimum clearances (in brackets) in all cases.

Take into account the space required for opening the burner door.

The burner door can be hung on the right or left.

The wall clearance on the hinge side must be at least the same as the amount by which the burner projects (AB). Recommended wall clearance AB + 100 mm.

If you do not observe the recommended minimum wall clearances, you will not be able to use the cleaning set (accessory) to clean the boiler. As an alternative, we recommend using shorter (approx. 1 m in length) mountable cleaning devices or wet cleaning.

Boiler size		Clearance A (mm)	
kW	Sections	recommended	minimum
570 – 820	9 – 12	2300	1400
920 – 1200	13 – 16	3000	1500

Tab. 9 Recommended and minimum wall clearances

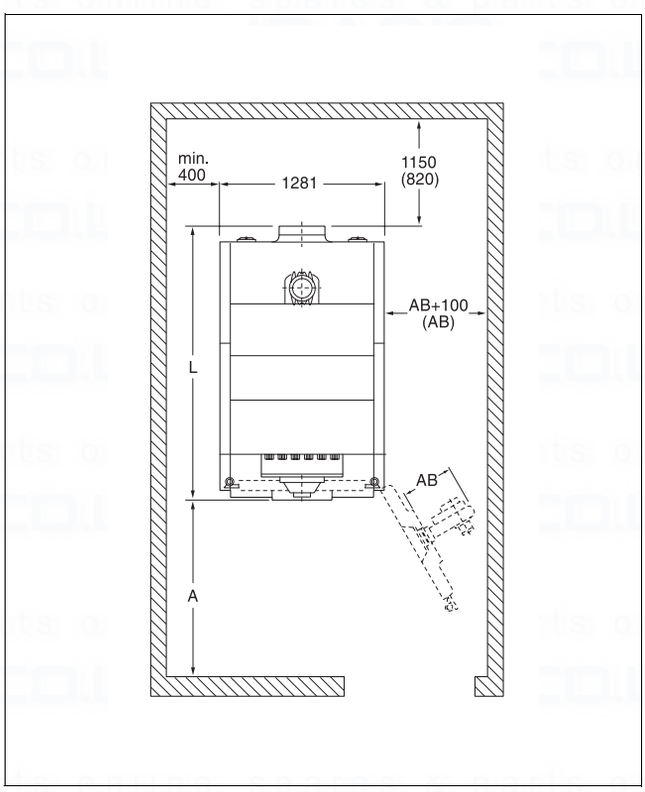

Fig. 4 Boiler room with boiler (dimensions in mm)

4.3.1 Base and boiler plinth

Place the boiler on a 50 – 100 mm high base (observe wall clearances). The base must be flat and level. The front edge of the boiler should be flush with the edge of the base.

A sound-absorbing plinth is available as an accessory. The boiler plinth prevents the transmission of vibrations to the base.

If you are not using a boiler plinth (accessory), angled steel sections (100 x 50 x 8 mm) or flat steel sections (100 x 5 mm) must be put in place when installing the base.

Number of sections	L1 (base)	L2 (steel section)
9	1670	1470
10	1840	1640
11	2010	1810
12	2180	1980
13	2350	2150
14	2520	2320
15	2690	2490
16	2860	2660

Tab. 10 Base dimensions for angled/flat steel sections

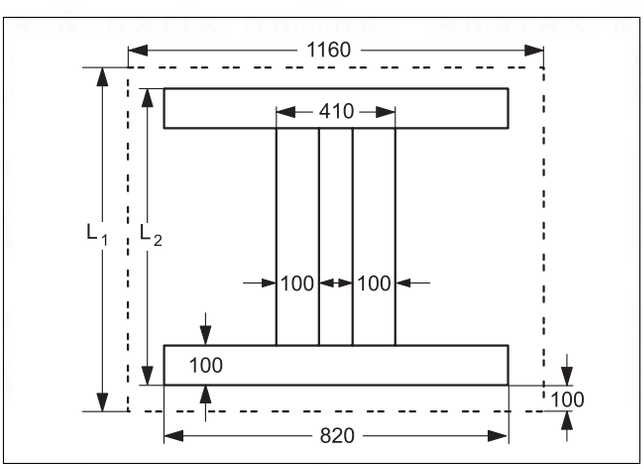

Fig. 5 Foundation dimensions

4.4 Assembling the boiler block

A distinction is made between delivery as a pre-assembled block and delivery in loose sections. When delivered as a block, the boiler sections are already fully assembled and checked for leaks prior to despatch. If, because of physical limitations, a boiler block cannot be installed or brought inside the building, delivery in loose sections would facilitate assembly on site.

The following describes the assembly of the boiler block when delivered in loose sections.

For the further installation of a pre-assembled boiler block, → see Chapter 4.5, page 18.

4.4.1 Arrangement of boiler sections

CAUTION: Risk of injury due to inadequately secured boiler sections.

- Use only a suitable means of transportation when handling the boiler sections, e.g. a sack truck with strap or a stair or step trolley.
- Prevent the boiler sections from sliding off when transporting them.
- Prevent the boiler sections from falling over using the installation aid (accessory) First screw the rear section firmly onto the installation aid (→ Fig. 7).

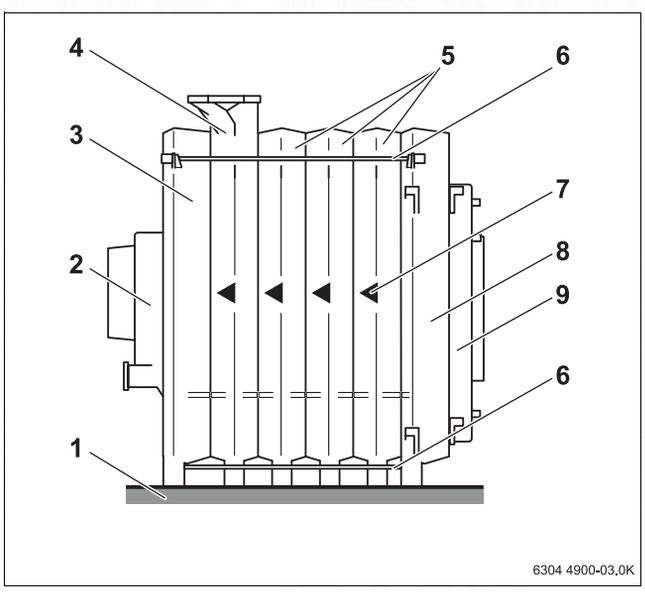

Fig. 6 Assembled boiler block

1 Base/sound-absorbing boiler plinth
2 Flue gas collector
3 Rear section
4 Central section with flow connection
5 Centre section
6 Anchor rod
7 Installation direction arrow
8 Front section
9 Burner door with burner plate

The boiler block is always installed from the back forwards, i.e. the rear section (→ Fig. 6, [3]) is always installed first, and the front section (→ Fig. 6, [8]) always installed last.

When assembling, observe the installation direction arrows (→ Fig. 6, [7]) for each boiler section.

Make sure you position the middle section with the upper flow connection (→ Fig. 6, [4]) correctly.

Install the boiler block according to the following instructions and illustrations.

The installation aid is available on request.

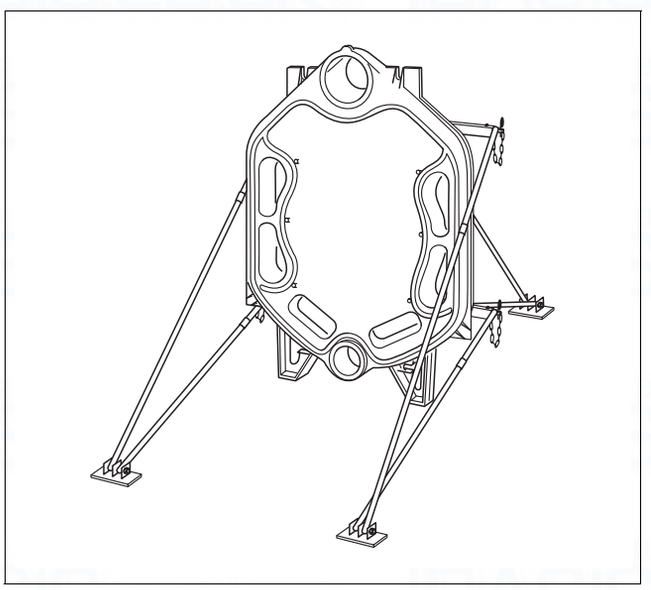

Fig. 7 Rear section with fitted installation set

4.4.2 Joining the boiler block assembly

Preparation of boiler sections

- Remove nuts and washers from the studs on the hubs of the boiler sections before attaching the rear section and front section.
- Put the rear section in place and prevent from falling over using the installation aid (→ see Fig. 7 and separate installation aid instructions).
- File down any burrs on the hubs.

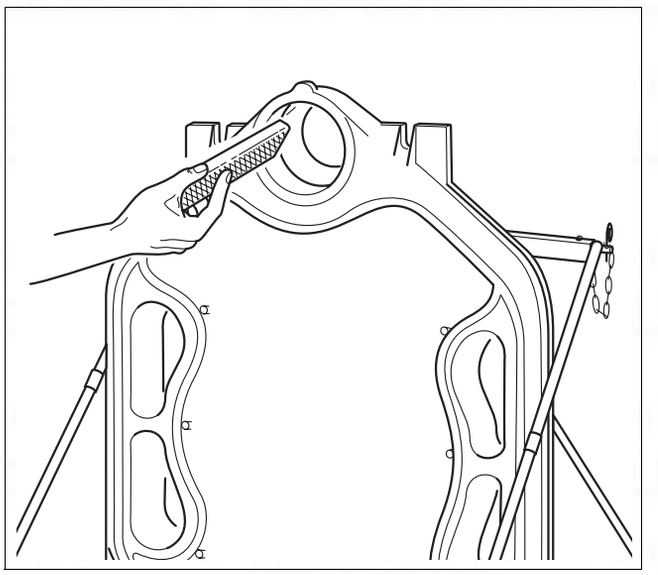

Fig. 8 Deburring the hub

- Clean the packing grooves where required using a wire brush and cloth.

WARNING: Danger of burning from flammable cleaning agents.
- Observe the cleaning agent safety instructions.
- When using cleaning agents, avoid naked flames, incandescence and sparks.

- Clean the hub sealing faces with a rag soaked in white spirit.
- Evenly coat the hub sealing faces with sealant.

The next step involves preparing the nipples that will eventually seal the boiler sections.

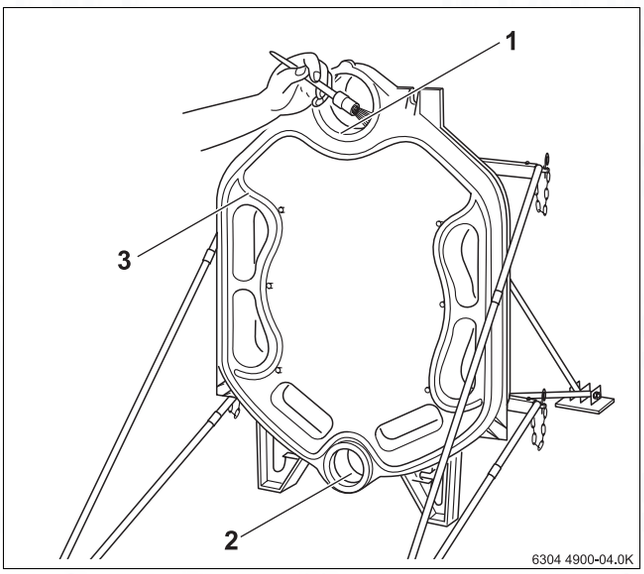

Fig. 9 Coating the hub sealing faces

1 Upper hub sealing face
2 Lower hub sealing face
3 Packing groove

- Clean nipple with a rag soaked in white spirit and coat evenly with sealant.
- Insert nipple directly into the upper (size 4, 181/70) and lower (size 2, 119/50) hub on the rear section.
- Hammer nipple home with alternate heavy blows.

The upper nipple must protrude approx. 43 mm and the lower nipple approx. 32 mm out of the corresponding hubs.

- Remove any burrs with a file.

The packing grooves must be clean and dry to enable the packing cord to adhere properly.

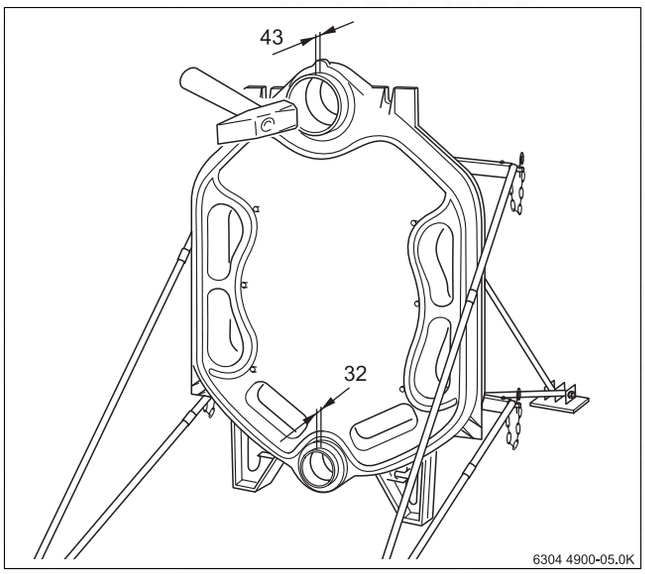

Fig. 10 Driving nipples home

CAUTION: Risk to health from vapours released and also skin contact during the processing of materials, such as adhesives, adhesive bases or sealants.

- Observe processing and safety instructions on the material packaging.
- Ensure good ventilation in the installation area.
- Wear work gloves to avoid contact with skin.
- The product and its container must be treated as hazardous waste for disposal purposes.

- Coat the packing grooves with adhesive (adhesive base)

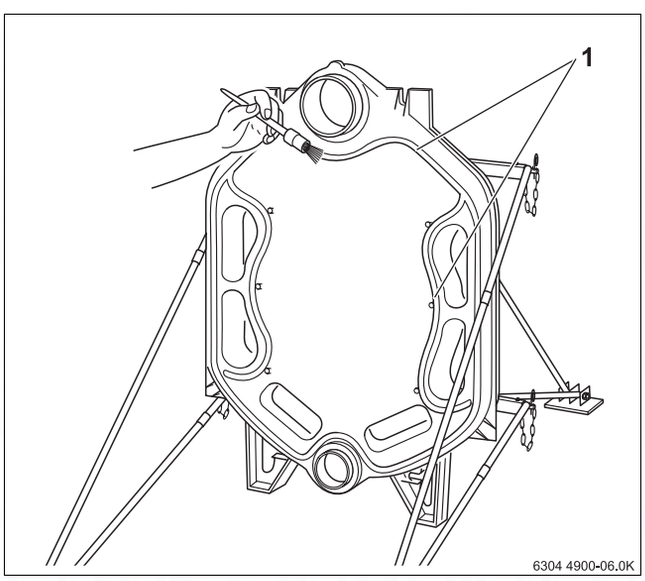

Fig. 11 Coat the packing grooves with adhesive

1 Packing grooves

- Insert the flexible packing cord on the front of the rear section, starting around the upper hub, into the packing grooves, and press in lightly.
- At the butt joints, overlap the packing cord by approx. 2 cm and press firmly together.

Unroll the required length of packing cord (KM cord) from the roll supplied. Peel the backing paper from the packing cord when inserting into the packing groove (do not stretch).

- Do not allow the packing cord to overlap on the left- or right-hand joints (→ Fig. 12, [3]).

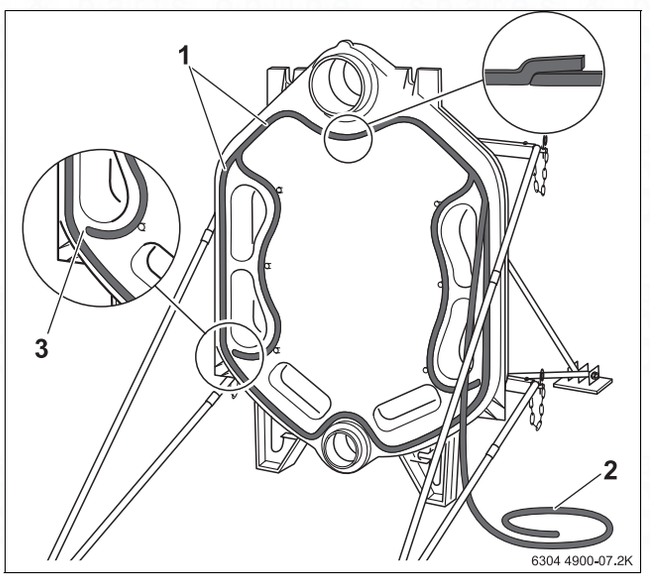

Fig. 12 Inserting packing cord (KM cord)

1 Packing grooves
2 Packing cord
3 Joints

Prepare the first central section (with the upper flow connection):

- File down any burrs on the hub.
- The packing springs must be clean and dry. Clean if necessary.

CAUTION: Risk to health from vapours released during the processing of materials, such as adhesives, adhesive bases or sealants.

- Observe processing and safety instructions on the material packaging.
- Ensure good ventilation in the installation area.
- Wear work gloves to avoid contact with skin.
- The product and its container must be treated as hazardous waste for disposal purposes.

- Clean the hub sealing faces with a rag soaked in white spirit.

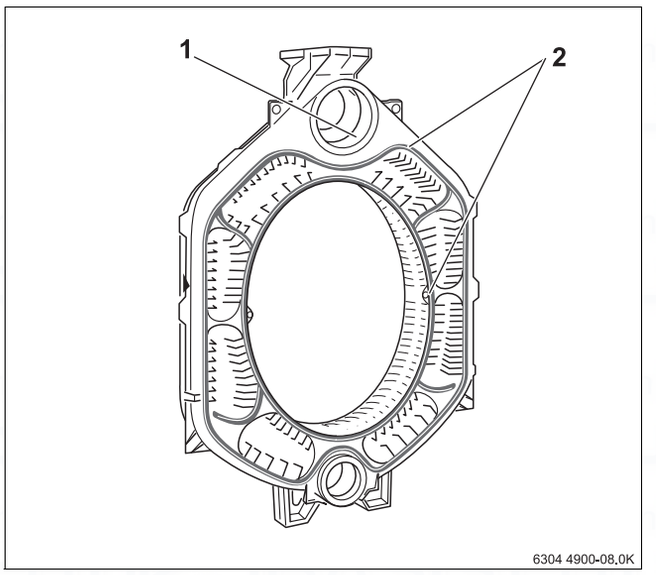

Fig. 13 Preparing the centre section

1 Hub sealing face
2 Sealing springs

- Evenly coat the hub sealing faces with sealant.
- Coat the packing springs with adhesive (adhesive base)
- Position the central section with the flow connection so that the upper and lower hubs fit onto the nipples in the rear section. The installation direction arrow must point towards the back.

To make installation easier, place the boiler section to be fitted onto the nipple on the upper hub first. The boiler section can then be adjusted accordingly on the lower hub.

- Drive first central section onto the rear section using a wooden or a rubber mallet.

Before the nipples are inserted in the next central section, the part-assembled boiler block must be pulled together using the boiler compression tool.

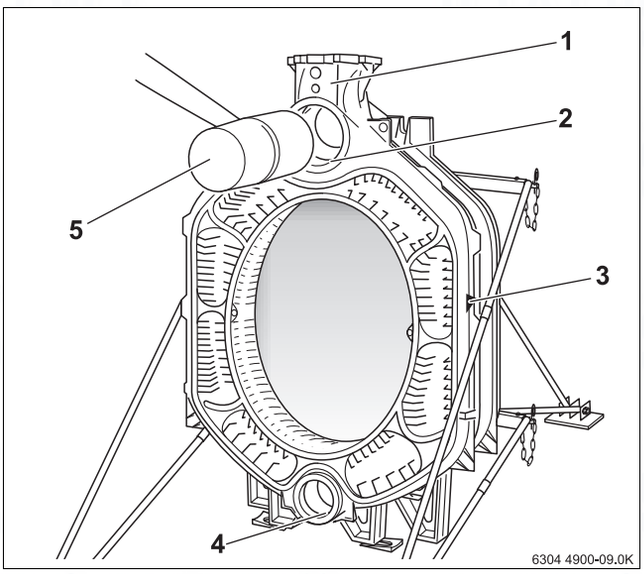

Fig. 14 Knocking the centre section into place

1 Flow connection
2 Upper hub
3 Installation direction arrow
4 Lower hub
5 Wooden or rubber mallet

Use a size 2.3 boiler compression tool (→ Fig. 3, page 11).

- Push flange bearings with clamping nuts onto the pull rods.
- Push a pull rod through the upper and lower hubs on the boiler block.
- Push mating flanges onto the pull rods and secure each with wedge.
- Hold the pull rod in the middle of the hubs and slightly draw together the compression tools using the clamping nut.

NOTICE: The boiler can be damaged by pulling the boiler sections together incorrectly, or due to excessive compression.

- Ensure that the nipples are positioned straight in the boiler sections after being hammered in and that they have not been damaged.
- Never compress more than one nipple joint at a time.
- Stop compressing when the boiler hubs meet.

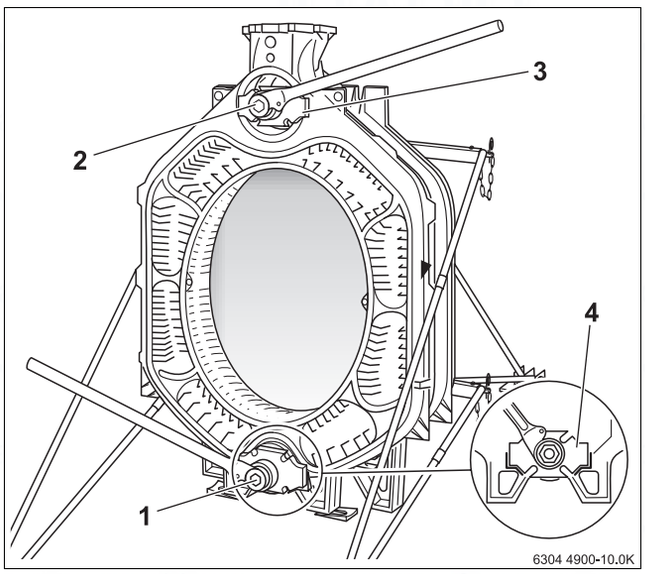

Fig. 15 Using the boiler compression tool

1 Boiler compression tool (bottom hub)
2 Boiler compression tool (top hub)
3 Flange bearings (top)
4 Flange bearings (bottom)

- Place ratchet wrench onto clamping nut and compress boiler sections by tightening evenly.

WARNING: Danger of accident from material fatigue. Improperly used or poorly maintained compression tools may break.

- Never work directly in front of the compression tool while it is being tensioned.
- Ensure that no one is standing in front of the compression tool.

- Release and remove the boiler compression tool.
- Check nipples are seated correctly.

NOTICE: Compression tool damage
The compression tool may be damaged or destroyed if you compress pull rods with loose threaded connections.

- Always check the pull rods before each use and tighten as necessary. The pull rod is correctly positioned if it is fully inserted and no thread is showing.
- Always keep the thread clean. Dirty threads may damage the compression tool during compression.
- Always lubricate the thread sufficiently.

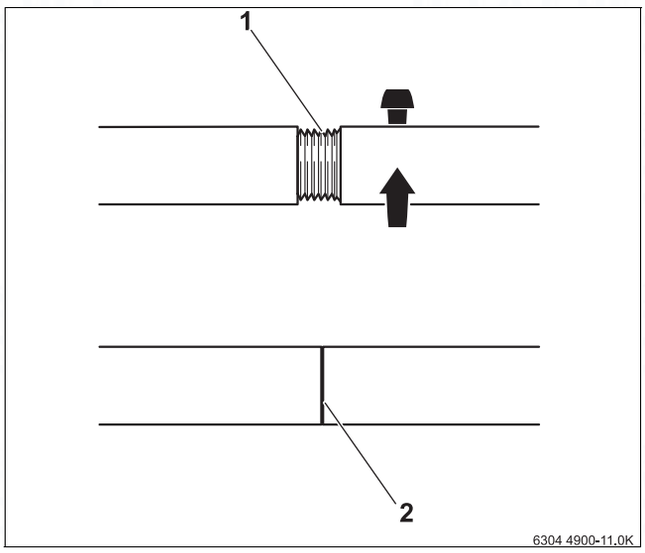

Fig. 16 Boiler compression tool 2.3

1 Threaded connection on the pull rods (loosened)
2 Threaded connection on the pull rods (correct position)

Fig. 17 shows the central section with flow connection. The nipples for fitting the next central section are inserted into the corresponding hubs. The packing cord has already been inserted into the packing groove. As with the rear section (→ Fig. 12, page 15), there is also a break in the elastic packing cord here. The boiler section has been equipped with foot wedges for ease of installation. The boiler section foot wedges are also used later for final levelling of the boiler block.

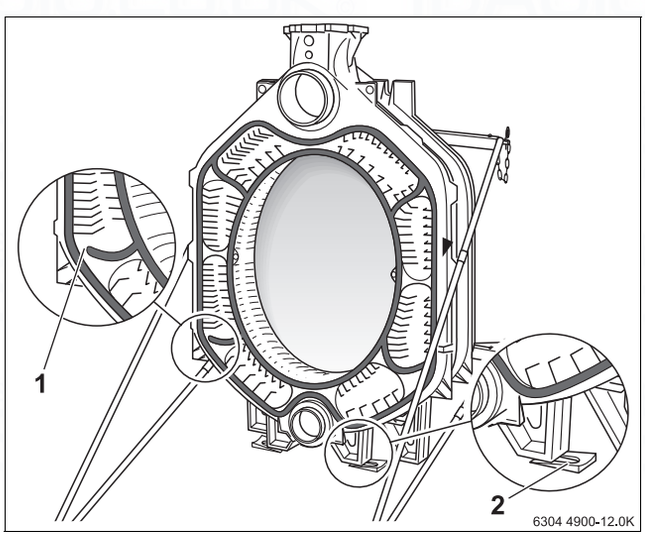

Fig. 17 Using the boiler section foot wedges

1 Packing cord (with break)
2 Boiler section foot wedge

Assemble all other boiler sections as described. The front section is fitted last.

After the front section is attached, loosen the compression tool but do not remove it. Insert the anchor rods first.

NOTICE: Damage to system through excessively low contact pressure.

- Do not compress the spring pack. Only use the spring pack in its original state.

- Insert the anchor rods (with spring packs fitted) into the cast lugs on the top left and right and bottom left and right, next to the boiler block hubs.
- Put a nut onto each of the threaded anchor rods and tighten by hand.
- Now tighten the nuts on the anchor rods 1 to 1½ turns.
- Level the boiler block vertically and horizontally on the base/silencing plinth (→ see Chapter 4.3.1, page 12). Use the boiler section foot wedges provided for this purpose (→ Fig. 17, page 17).
- Remove boiler compression tool.

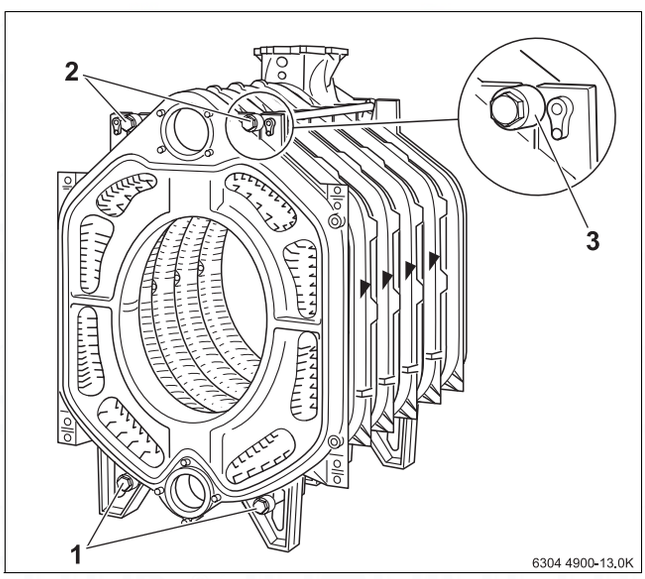

Fig. 18 Inserting the anchor rods

1 Anchor rods (bottom)
2 Anchor rods (top)
3 Anchor rod with spring pack

The next step describes the installation of the feed pipe (→ see Chapter 4.6, page 18).

4.5 Setting up the boiler block – (when supplied as a pre-assembled block)

- Cut through the straps.
- Remove pallet.

DANGER: Risk to life due to falling loads!

- Observe the transport information on the data sheet (attached to boiler block) when lifting the boiler block off the pallet.

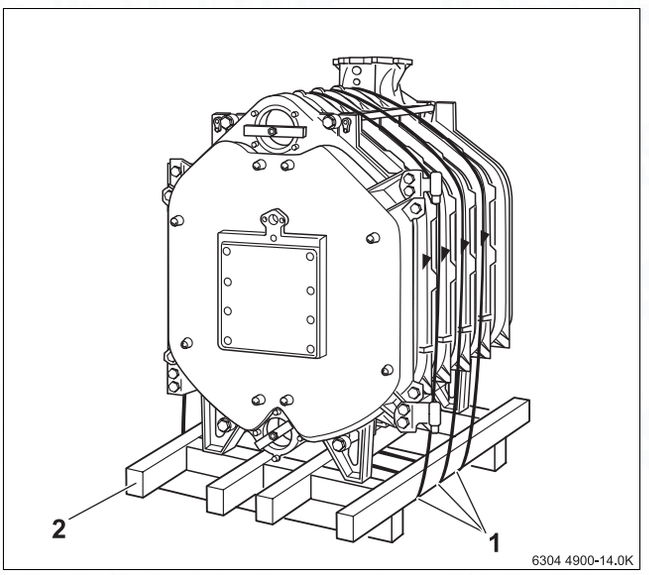

Fig. 19 Boiler block on pallet

1 Securing straps
2 Pallet

Level the boiler block vertically and horizontally on the base/silencing plinth. Use the boiler section foot wedges provided for this purpose.

Once the boiler block is levelled, remove the transport stay from the upper and lower hubs.

The following pages describe the installation of the feed pipe, sensor well and outer steam tube. The installation steps are the same, regardless of whether delivery is as a pre-assembled block or in loose sections.

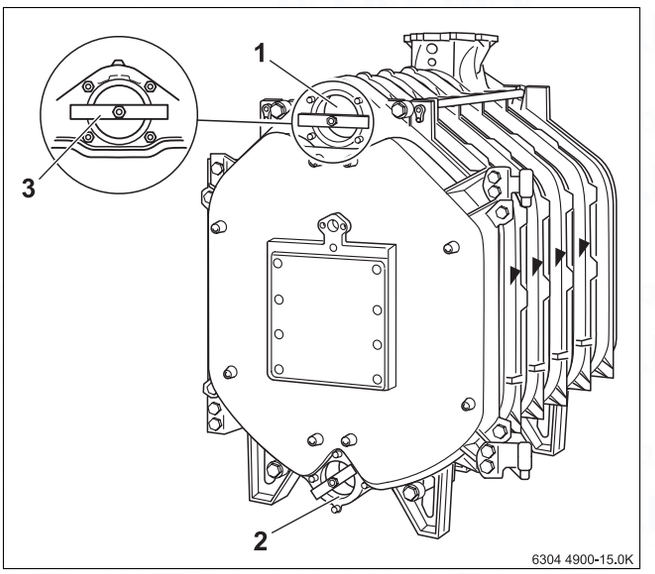

Fig. 20 Removing transport stay

1 Upper hub
2 Lower hub
3 Transport stay

4.6 Inserting the feed pipe (parts case)

On boilers with 9 – 11 sections the feed pipe is in 2 parts; on boilers with 12 – 16 sections, it comes in 3 parts.

- Push the flat gasket over the feed pipe.
- Push the feed pipe from the front into the upper boiler hub.
- Close off with dummy flange.

To ensure the discharge openings of the feed pipe are at the correct angle, the lug on the feed pipe connection endplate must be placed in the recess on the upper boiler hub.

- Place the lug on the feed pipe connection endplate into the recess on the upper boiler hub.

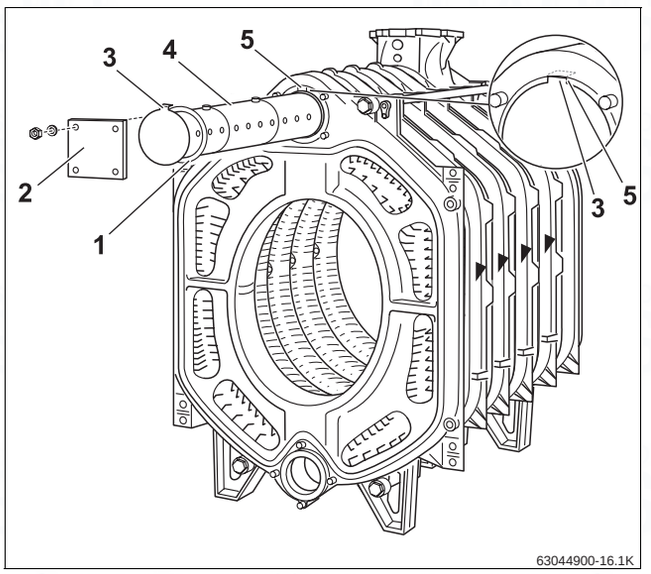

Fig. 21 Sealing in the feed pipe

1 Gasket
2 Dummy flange
3 Cam
4 Feed pipe
5 Recess in upper boiler hub

4.7 Sealing the sensor well (fittings case)

Sensor well R ¾ "

- Seal sensor well R ¾ " from the front (length 110 mm) into the upper R ¾ " tapped hole in the flow connection.

Sensor well R ½ "

- Seal sensor well R ½ " from the front (length 110 mm) into the lower R ½ " tapped hole in the flow connection.

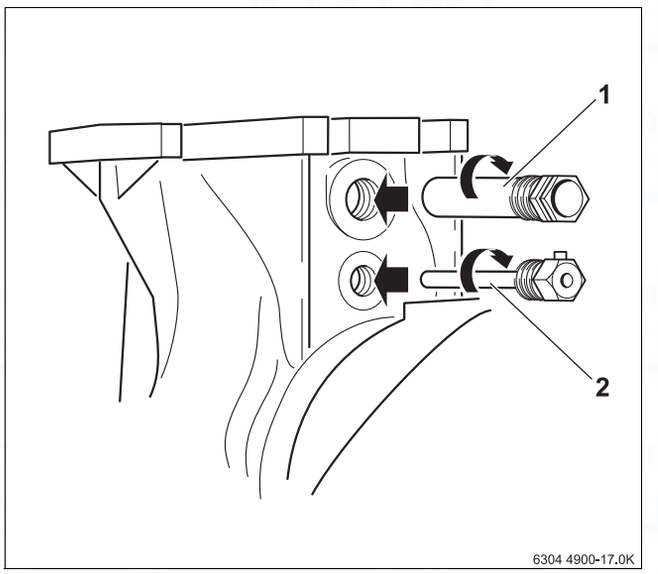

Fig. 22 Sealing the sensor wells

1 Sensor well R ¾ "
2 Sensor well R ½ "

4.8 Inserting the outer steam tube (fittings case)

- Fit the flange (length of edge: 130 mm) with R ¾ " tapped hole for the drain connection onto the rear lower boiler hub.
- Fit customer-supplied boiler fill and drain valve.

The customer-supplied boiler fill and drain valve is only used as a drain valve in this instance.

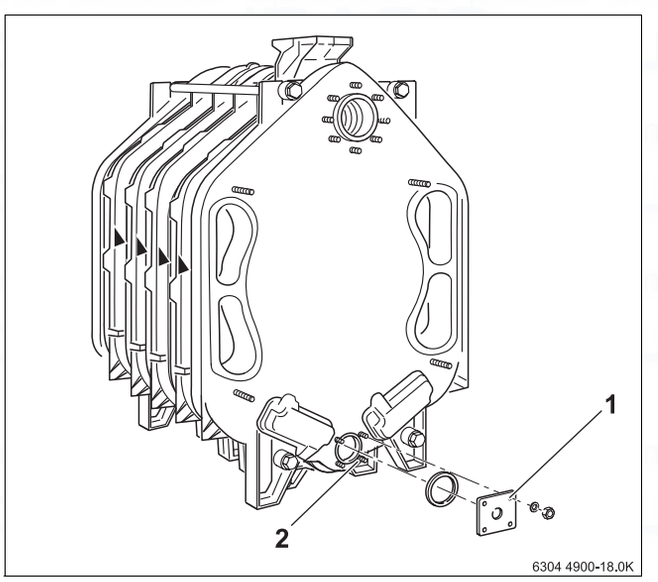

Fig. 23 Fitting the flange

1 Fill and drain connection
2 Lower boiler hub (rear)

- Push **outer steam tube element with spring (L_3) first** into the lower boiler hub.
- Hook the other outer steam tube elements (L_2) onto each other as shown in the detail drawing.
- Hook on the outer steam tube element with the handle (L_1) last.
- Close off lower boiler hub with flat gasket and dummy flange.

The length and number of outer steam tube elements depend on the boiler rating, and can be worked out using the → Tab. 11 below.

Elements		9	10	11	12	13	14	15	16
L_1	480 mm	1	–	–	1	–	1	–	–
	650 mm	–	1	1	–	1	–	1	1
L_2	510 mm	1	1	–	2	2	–	–	3
	680 mm	–	–	1	–	–	2	2	–
L_3	450 mm	1							

Tab. 11 Length and number of outer steam tube elements

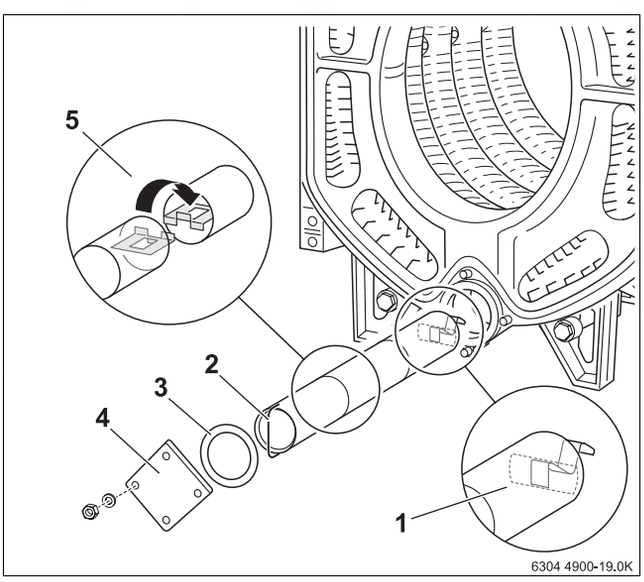

Fig. 24 Inserting the outer steam tube

1 Outer steam tube element L_3
2 Outer steam tube element L_1
3 Gasket
4 Dummy flange
5 Outer steam tube element L_2

4.9 Boiler block pressure test (only when supplied in loose sections)

A boiler block pressure test must be carried out (only when supplied in loose sections). If supplied as a pre-assembled block, the pressure test has already been carried out in the factory.

For the further installation of a pre-assembled boiler block, (→ see Chapter 4.11.4, page 23).

4.9.1 Preparing for pressure test

WARNING: Risk of accident as a result of ignoring the safety regulations.
- Observe the relevant country-specific standards, work safety legislation and regulations for carrying out pressure tests.

- Close off flow and return connections (flow connection flange with air vent valve).

NOTICE: Risk of system damage from excessive pressure.
- The boiler block must not be connected to the pipework of the heating system.

- Slowly fill the boiler block with water via the fill and drain connection. Vent the boiler block via the boiler flow connection with air vent.

4.9.2 Perform pressure test

Carry out a pressure test with a test pressure of 8.6 bar (in accordance with the requirements of the European Pressure Vessel Directive).

Use a pressure gauge class 1.0 to measure the pressure.

- Drain water via fill and drain valve (→ Fig. 23, [1], page 19) upstream of the connection to the water system, or if a hub joint is leaking.

4.9.3 Leaking hub joint

If you establish during the pressure test that hub joints are leaking, follow the procedure described below.

- Remove feed pipe and outer steam tube.

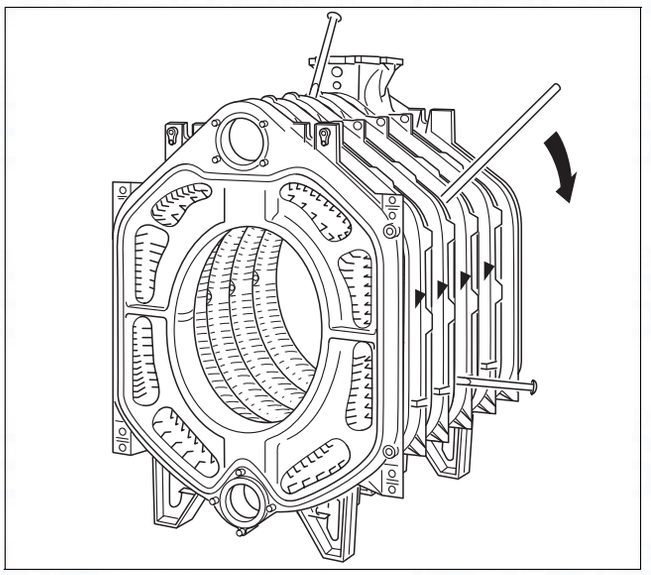

Fig. 25 Separate the boiler block

- Undo nuts on anchor rods and remove anchor rods.
- Separate the boiler block at the leak location by driving (knocking) in flat wedges or chisels between the sections at the points provided at the top and bottom (→ Fig. 25).
- You MUST use new nipples and new packing cord when reassembling.
- Pull the boiler block together again using the boiler compression tool.
- Repeat pressure test

4.10 Boiler water connections

Observe the following note regarding the boiler connection to the pipework. This is important to ensure trouble-free operation.

NOTICE: System damage due to leaking connections!

- Secure the supply pipes free of stress to the boiler connections.
- Have the customer install a fill valve in the heating system (return).

NOTICE: System damage caused by deposits, local overheating, noise and corrosion.

- Flush the existing heating system thoroughly before the boiler is connected to the pipework.
- We recommend you install a desludging unit in the heating system return to prevent boiler damage.

The weld neck flange (with welded-on pipe) is fitted to the upper boiler hub if the return is connected at a later stage.

The weld neck flange and flat gasket are shown in Fig. 27.

- The flow connection flange is required for connecting the flow at a later stage.

A boiler safety set is available on request.

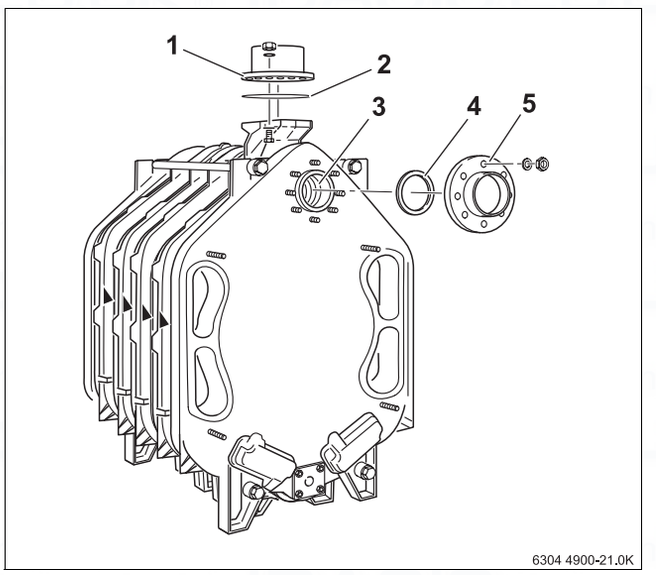

Fig. 26 Fitting a connection flange

1 Flow connection flange
2 Gasket
3 Upper boiler hub (return connection)
4 Gasket
5 Weld neck flange

4.11 Installing fittings and burner door (delivery in loose sections)

If delivered as a pre-assembled block, the burner door, flue gas header and two clean-out covers are already installed.

4.11.1 Positioning the flue gas header

The GP packing cord (fibre glass cord with silicon casing) is used to seal the joint between boiler and flue gas header.

- Stick the GP packing cord (approx. 1500 mm long) into the groove on the rear section using Silastik adhesive.
- Insert the packing cord in such a way that the packing cord joint is in the upper part of the groove.
- Place the flue gas header onto the four threaded studs on the rear section and secure using washers and nuts.

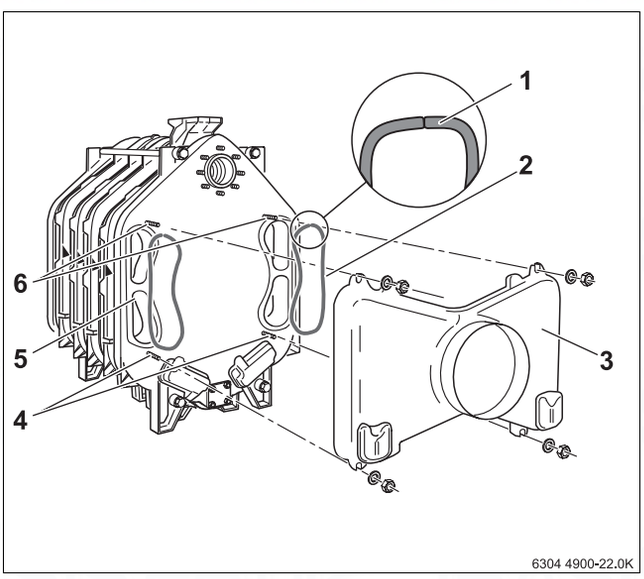

Fig. 27 Positioning the flue gas header

1 Packing cord joint in the upper part of the groove
2 Packing cord
3 Flue gas collector
4 Studs
5 Rear section
6 Studs

4.11.2 Fitting clean-out cover onto rear section

Fig. 28 shows the fully equipped rear section with the clean-out covers on the flue gas header and the clean-out covers on the rear section.

- Stick the GP10 packing cord (approx. 800 mm long) in the groove on the rear section using Silastik adhesive (packing cord joint at the top).
- Secure the clean-out covers on the rear section with washers and nuts.

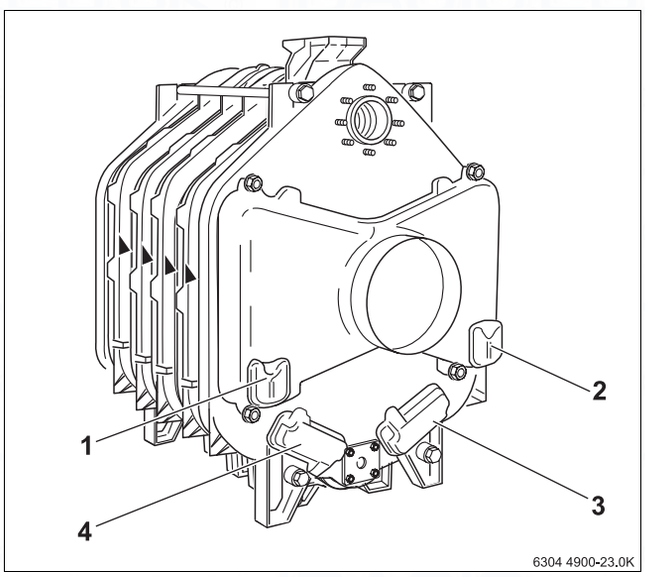

Fig. 28 Securing the clean-out covers

1 Clean-out cover on the flue gas header
2 Clean-out cover on the flue gas header
3 Clean-out cover on the rear section
4 Clean-out cover on the rear section

4.11.3 Installing the burner door

In the factory, the burner door hinge lobes are fitted on the right-hand side. For left-hand closing, dismantle the hinge lobes from the right-hand side and reassemble them on the left-hand side of the burner door.

- Place a few drops of Silastik adhesive, 15 – 20 cm apart, in the packing grooves on the front section.
- Insert GP packing cord into the packing groove on the front section. Position the packing cord joint at the side.
- Screw each hinge pin (right-hand closure) to the front section with two hexagon bolts M12 x 55. For left-hand closing, secure accordingly on the left-hand side.
- Hook the burner door with the hinge lobes into the hinge pins.

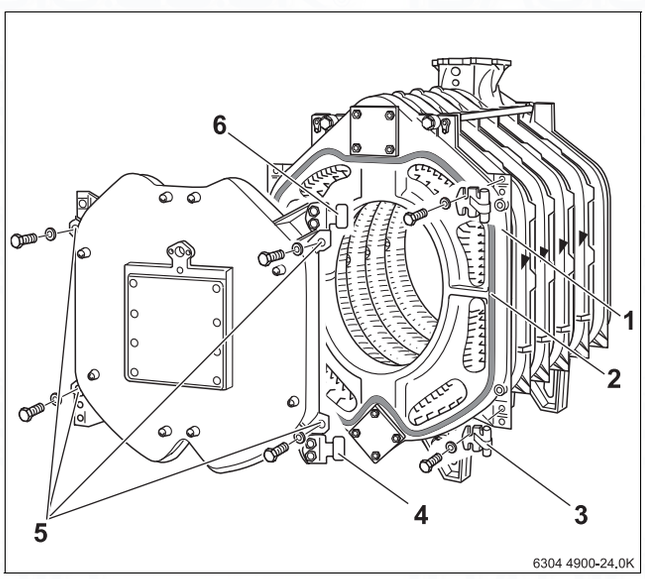

Fig. 29 Installing the burner door

1 Hinge pin (top)
2 Packing cord joint (side)
3 Hinge pin (bottom)
4 Hinge lobe (bottom)
5 Holes in the burner door
6 Hinge lobe (top)

4.11.4 Inserting the hot gas baffle plates

The boiler, which consists of 16 sections, does not contain any hot gas baffles.

A distinction is made between hot gas baffles with a sickle profile and those with a corrugated profile.
The hot gas baffles with a sickle profile come in two parts. If equipping a hot gas flue with sickle-profile baffles, you MUST ensure that the two baffle parts are hooked together.
The baffle parts are shown hooked together in → Fig. 31, page 23.

- Take hot gas baffles from the fittings case and insert into the hot gas flues according to the inscription on them (→ see Fig. 30, Fig. 31, page 23, Fig. 32, page 24 and the following Tab. 12, page 24).

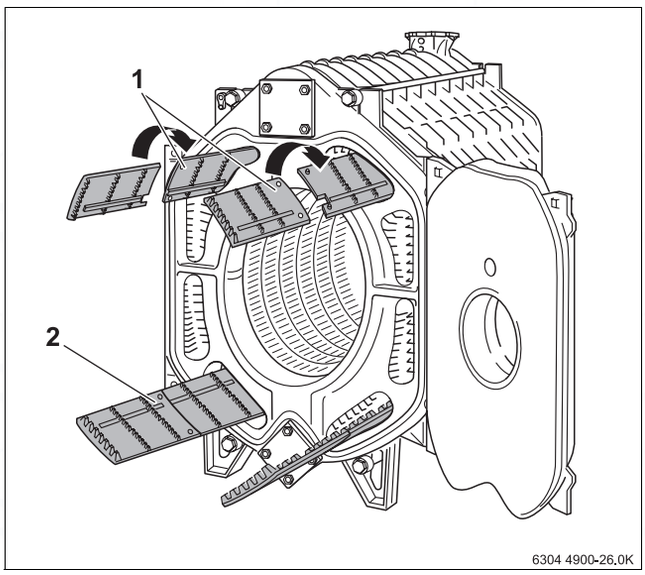

Fig. 30 Inserting the hot gas baffles (boiler block with 9 sections)

1 Hot gas baffles with sickle profile (part-baffle)
2 Hot gas baffles with sickle profile (hooked together)

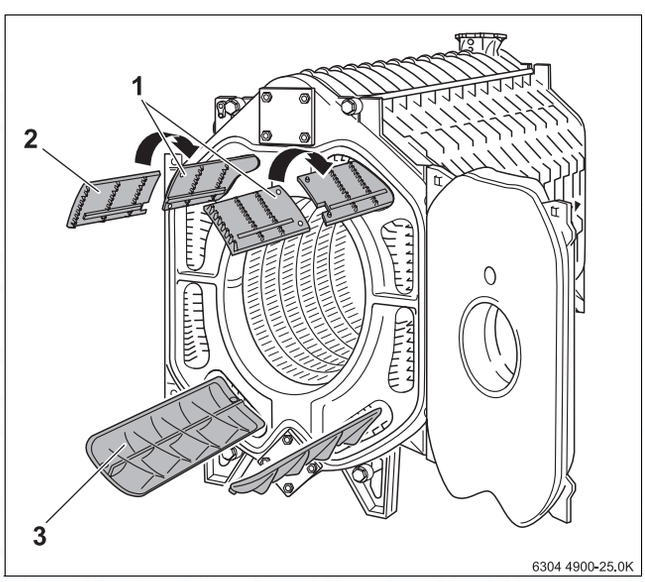

Fig. 31 Inserting the hot gas baffles (boiler block with 13 sections)

1 Hot gas baffles with sickle-profile (baffle part)
2 Hot gas baffles with sickle-profile (baffle part)
3 Hot gas baffle with corrugated profile

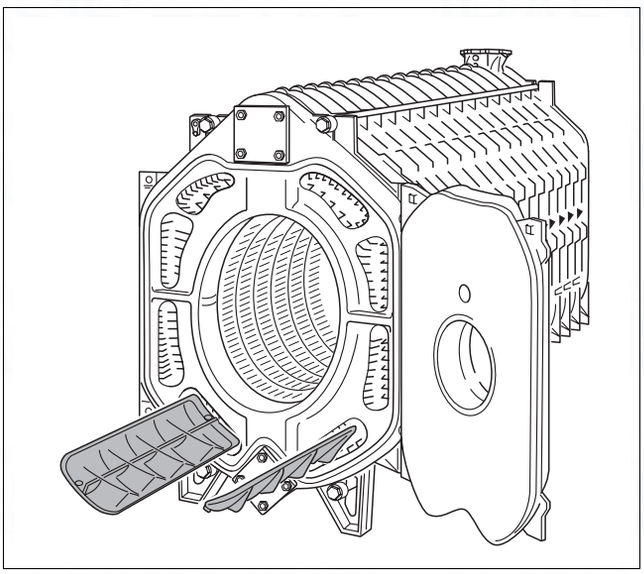

Fig. 32 Inserting the hot gas baffles (boiler block with 15 sections)

Number of sections	Number of hot gas baffles			
	Top left	Top right	Bottom left	Bottom right
9	2 x sickle profile	2 x sickle profile	2 x sickle profile	2 x sickle profile
10	2 x sickle profile	2 x sickle profile	2 x sickle profile	2 x sickle profile
11	2 x sickle profile	2 x sickle profile	2 x sickle profile	2 x sickle profile
12	1 x corrugated profile	1 x corrugated profile	2 x sickle profile	2 x sickle profile
13	2 x sickle profile	2 x sickle profile	1 x corrugated profile	1 x corrugated profile
14	1 x corrugated profile	1 x corrugated profile	1 x corrugated profile	1 x corrugated profile
15	–	–	1 x corrugated profile	1 x corrugated profile
16	–	–	–	–

Tab. 12 Number of hot gas baffles

4.12 Filling the heating system and checking for leaks

Before putting the heating system into operation, it must be checked to ensure that no leaks will occur during operation. Pressurise the heating system with a pressure equal to the response pressure of the safety valve.

NOTICE: System damage!

Temperature stresses can cause cracks if you fill your heating system when hot. The boiler will then leak.

- Only fill the system when cold (the flow temperature should be no more than 40 °C).
- When the heating system is in operation, do not fill it via the boiler fill & drain valve. Instead, use an approved WRAS filling method.
- Pay attention to the water quality as specified in the operator's log, and record the volume and quality of fill water used.

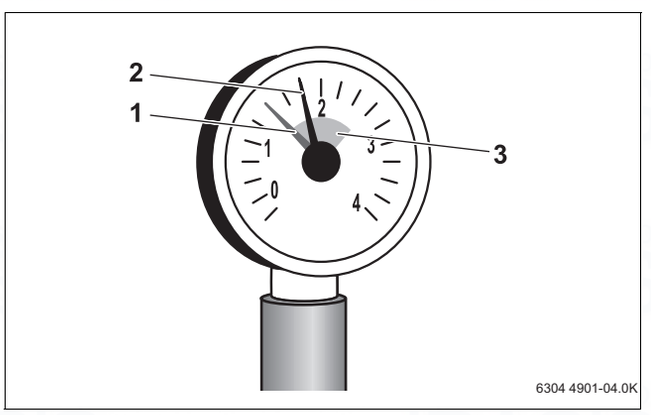

Fig. 33 Pressure gauge for sealed unvented systems

1 Red needle
2 Pressure gauge needle
3 Green band

- Fill the boiler and heating system via an WRAS approved method.
- Slowly fill the heating system. Observe the display (pressure gauge/hydrometer) while filling.
- Fill the heating system to the desired pressure (e.g. 1.5 bar)
- Vent the heating system via the radiator bleed valves.
- Top up with water again if the operating pressure drops as a result of bleeding the system.

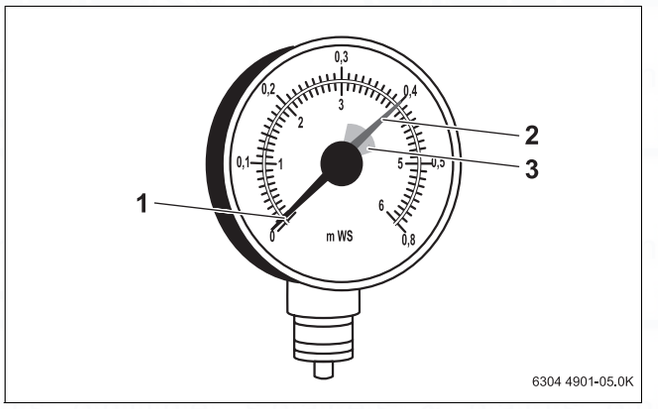

Fig. 34 Hydrometer for open systems

1 Hydrometer needle
2 Green needle
3 Red band

4.13 Installing the burner

This chapter explains how to install the burner.

NOTICE: System damage through incorrect burner!

- Only use burners that conform to the technical requirements of the boiler (→ see Chapter 2.5, page 7).

- Close burner door and secure with four hexagon bolts M16 x 140 at the positions shown.
- Tighten hexagon bolts evenly and diagonally.

Predrilled and undrilled burner plates are available from Buderus upon request (accessory).

If you have ordered an undrilled burner plate from Buderus, you will have to machine this on site.

- Drill or cut the burner plate to match the required blast tube diameter (max. Ø 270 mm).
- Drill holes for fastening the boiler using the burner connecting flange as a template.
- Screw burner plate onto the burner door (seal with GP packing cord; diameter 10 mm).
- Screw the burner to the burner plate.
- Cut out insulating rings to match the blast tube diameter.
- Fill the remaining gap between burner door lagging and blast tube with the modified insulation rings.
- Connect the sight glass blower connection to the burner to ensure the sight glass remains clear of deposits.

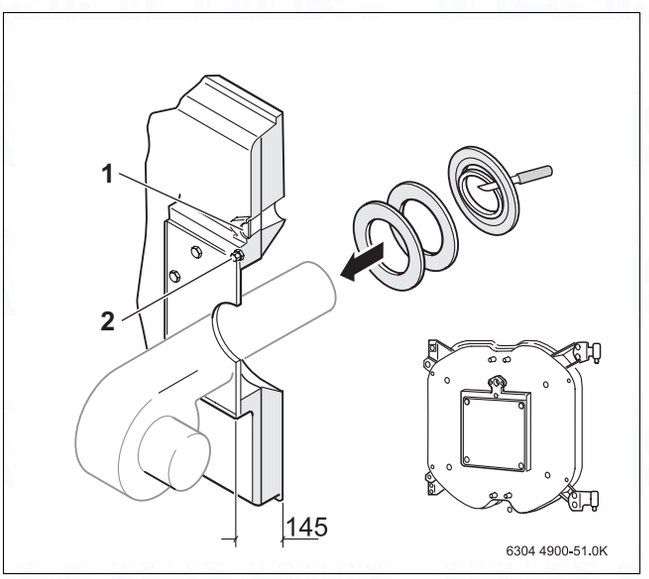

Fig. 35 Installing the burner

1 Inspection hole
2 Blower connection

4.14 Boiler flue connection

This chapter describes how the boiler flue connections are made.

4.14.1 Fitting the flue pipe sealing collar (accessory)

For better sealing of the boiler/flue pipe, we recommend that you use the flue pipe sealing collar (accessory).

- Push the flue pipe as far as possible onto the flue gas header outlet.
- Place the flue pipe sealing collar around the flue pipe and flue gas header outlet so that it overlaps at the top.
- Place jubilee clips over the flue pipe sealing collar. One of the jubilee clips must press onto the flue gas header outlet and one onto the flue pipe.
- Tighten jubilee clips. The flue pipe sealing collar must fit smoothly and firmly in place.

Retighten the jubilee clips if required.

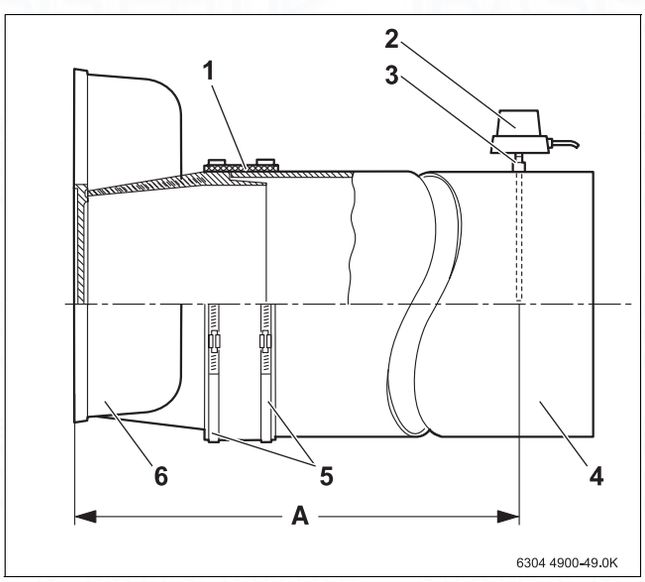

Fig. 36 Making the flue pipe sealing collar

1 Flue pipe sealing collar
2 Flue gas temperature sensor
3 Fem. connection
4 Flue
5 Jubilee clips
6 Flue gas collector

4.14.2 Fitting the flue gas temperature sensor (accessory)

- Weld the coupling into the flue pipe at a distance of 2 × flue pipe diameters (A) from the flue gas header.
- Fit the flue gas temperature sensor as described in the separate installation manual.

4.15 Installing the boiler casing

4.15.1 Fitting the thermal insulation

The insulation provided corresponds to the boiler size.

- Arrange the lagging on the boiler block as shown in the diagram in → Fig. 38 (the figures to the left of the boiler blocks represent the number of boiler sections).
- Push lagging under the boiler block. The boiler section feet are placed in the cut-outs in the lagging.

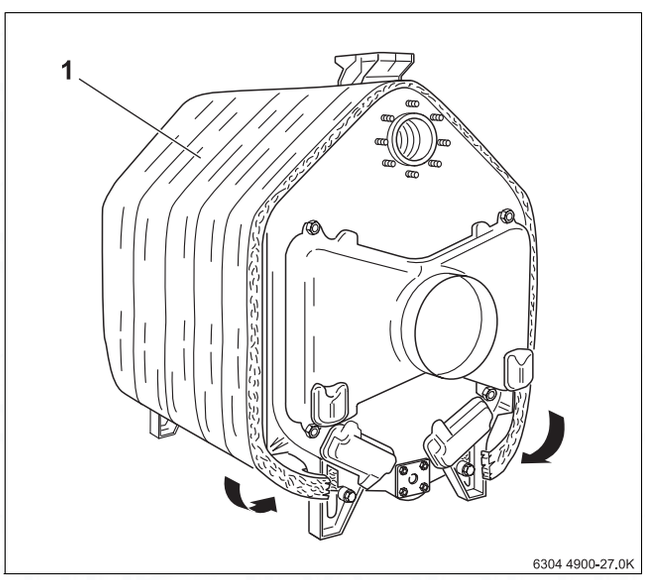

Fig. 37 Boiler block with thermal insulation

1 Thermal insulation

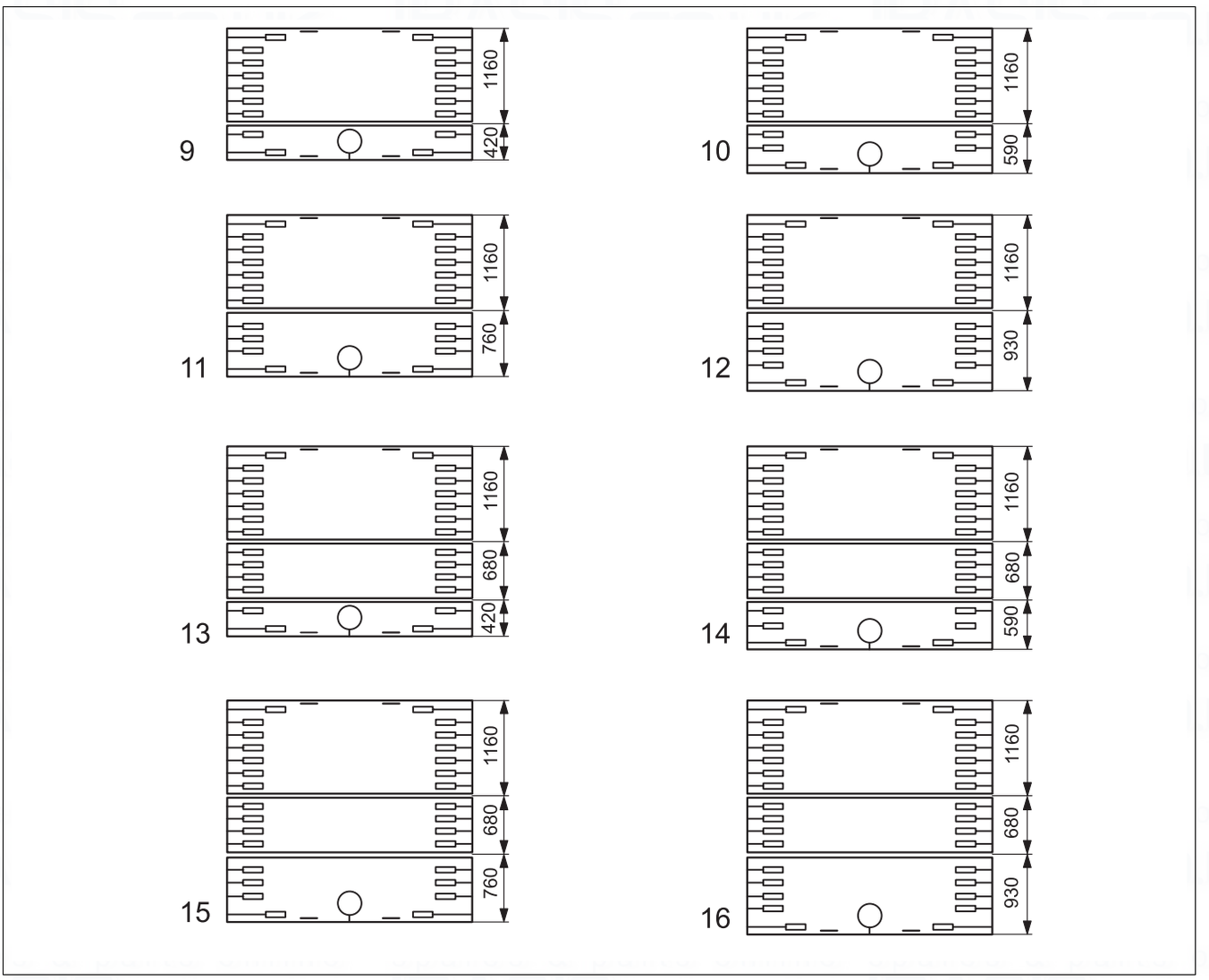

Fig. 38 Lagging for the various boiler sizes (dimensions in mm)

4.15.2 Fitting the connection plates

- Place top front cross bars onto the cast lugs and screw in place with hexagon bolts (M8 x 12). The folded edge on the front bar must face forwards.
- Place top rear cross bars onto the cast lugs and screw in place with hexagon bolts (M8 x 12). The folded edge of the rear cross bar must point towards the back.

- Place lengthways bars from the side onto the cross bars and screw in place with self-tapping screws. The folded edges of the of the lengthways bars must face towards the back, while the slotted holes are positioned towards the centre of the boiler.

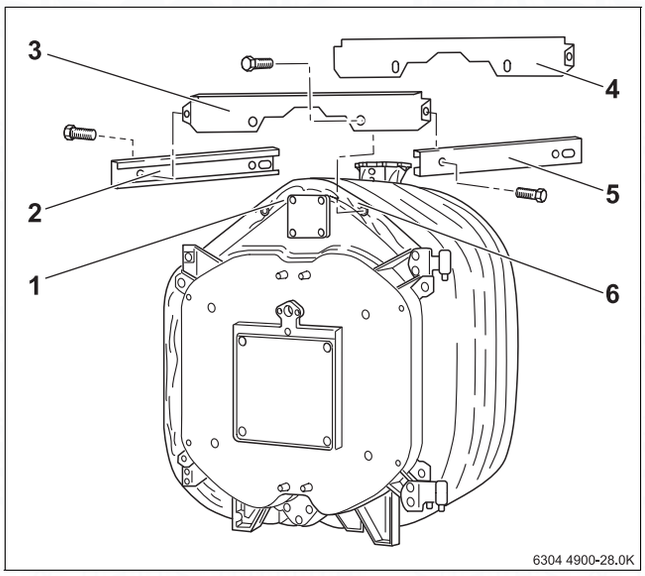

Fig. 39 Fitting cross bars and lengthways bars

1 Cast lugs
2 Lengthways bar
3 Cross bar (top front)
4 Cross bar (top rear)
5 Lengthways bar
6 Cast lugs

- Screw each lower cross bar to the end section feet with hexagon bolts.

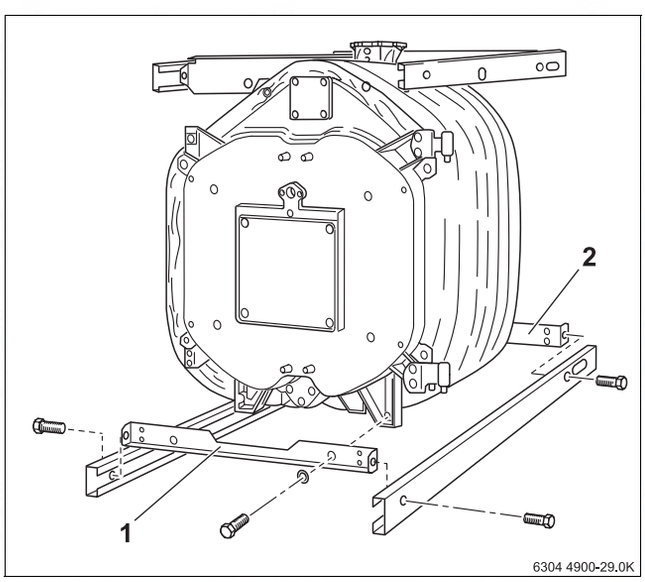

Fig. 40 Fitting the lower cross bars

1 Cross bar (bottom front)
2 Cross bar (bottom rear)

- Place lower lengthways bars from the side onto the cross bars with the folded edges facing inwards and the slotted hole towards the rear, and screw in place with self-tapping screws.
- Push rear section lagging onto the flue outlet. The cut-out for the boiler return must point upwards.
- Hook the rear section lagging onto the top rear bar with two tension springs.
- Close the slit below the flue outlet with tension springs.

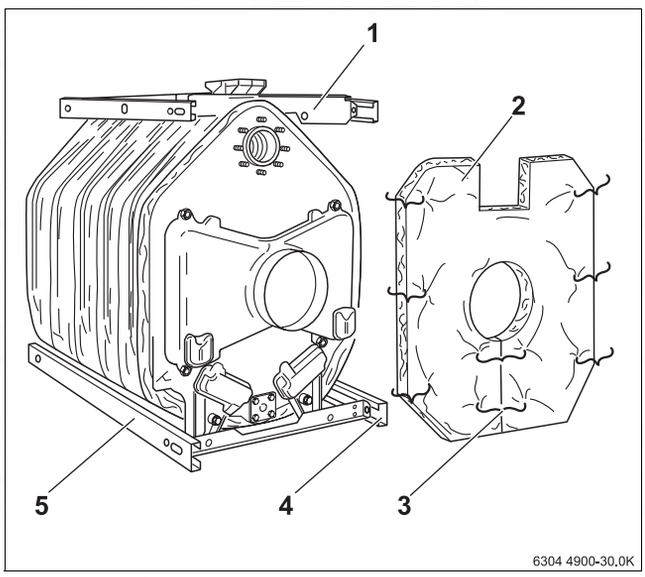

Fig. 41 Fitting lower lengthways bars and lagging

1 Top rear bar
2 Rear section lagging
3 Tension springs
4 Lower lengthways bar
5 Lower lengthways bar

- Push rectangular lagging onto the top front bar.
- Fasten lagging with 3 tension springs.
- Feed burner cable over the lagging, down the side of the boiler block.

> To prevent damage to the burner cable while opening the burner door, the burner cable must always be fed down the hinge side – whichever side the burner door – may be hung on.

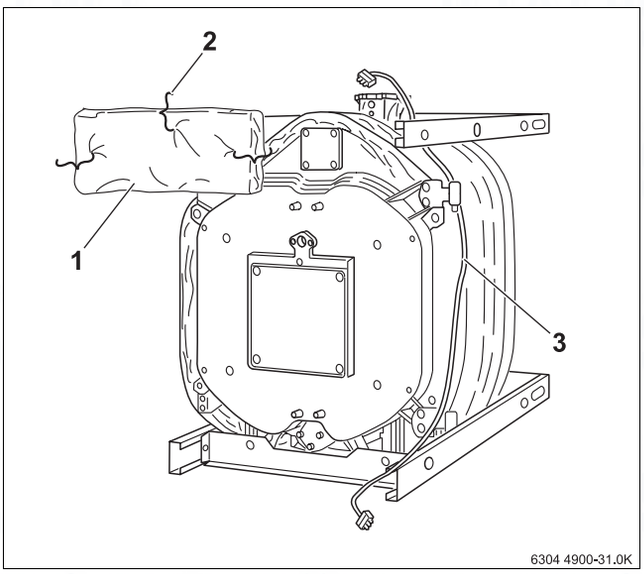

Fig. 42 Fitting the rectangular lagging and burner cable

1 Thermal insulation
2 Tension springs
3 Burner cable

- Depending on which side the door closes, screw the burner cable strain relief to the left or right hand side of the lower cross bar (→ Fig. 43 – for right-hand burner door closure).
- Push front plinth panel from the front into the lower lengthways bars and screw to lengthways bars.
- Fit the rear plinth panel in the same way.

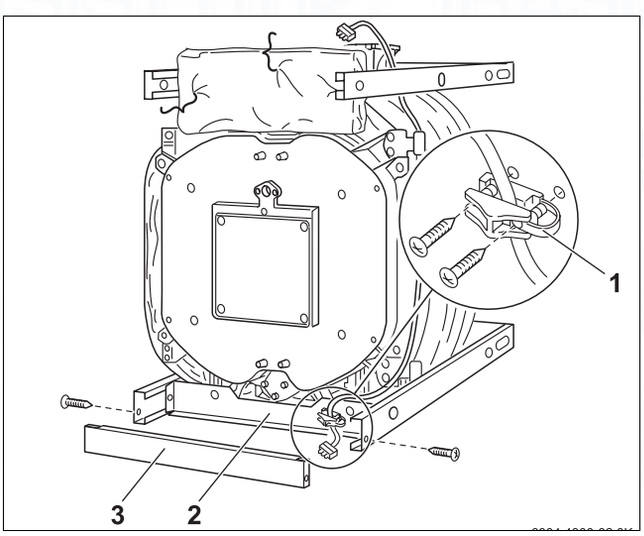

Fig. 43 Fitting the burner cable strain relief and plinth panels

1 Burner cable strain relief
2 Lower cross bar
3 Front plinth panel

Please see → Fig. 46, page 31 for the arrangement of the side sections and hoods.

- Push the lower folded edge of the first side panel section behind the lower lengthways bar, lift slightly and hook the top of the section into the slots on the upper lengthways bar.

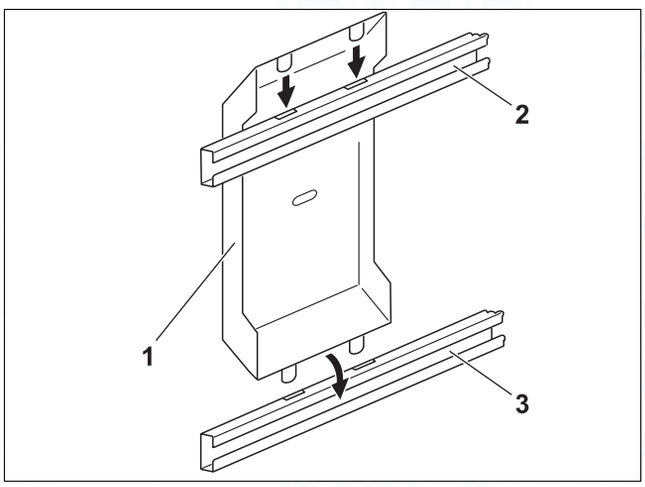

Fig. 44 Fitting the side panel section

1 First side panel section
2 Upper lengthways bar
3 Lower lengthways bar

- Push the lower folded edge of the remaining side panel sections behind the lower lengthways bar, lift slightly and hook the upper folded edge over the upper lengthways bar.

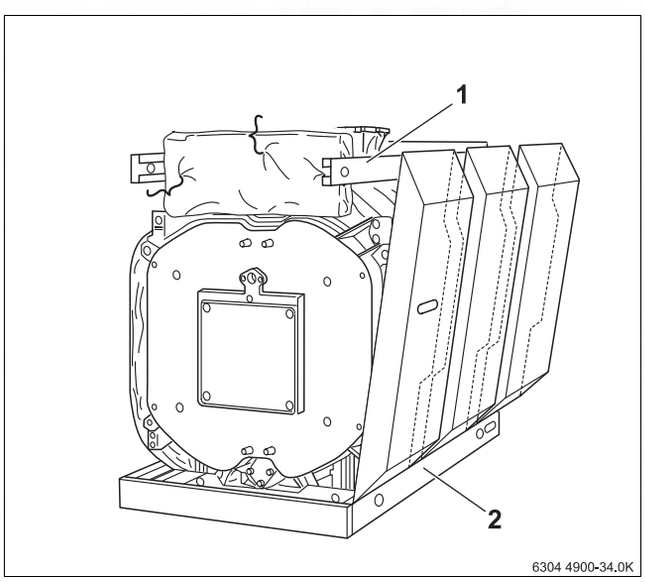

Fig. 45 Fitting the remaining side panel sections

1 Upper lengthways bar
2 Lower lengthways bar

4.15.3 Fitting side panels and hoods

- Fit the side panels (left) and hoods (right) as shown in the diagram.

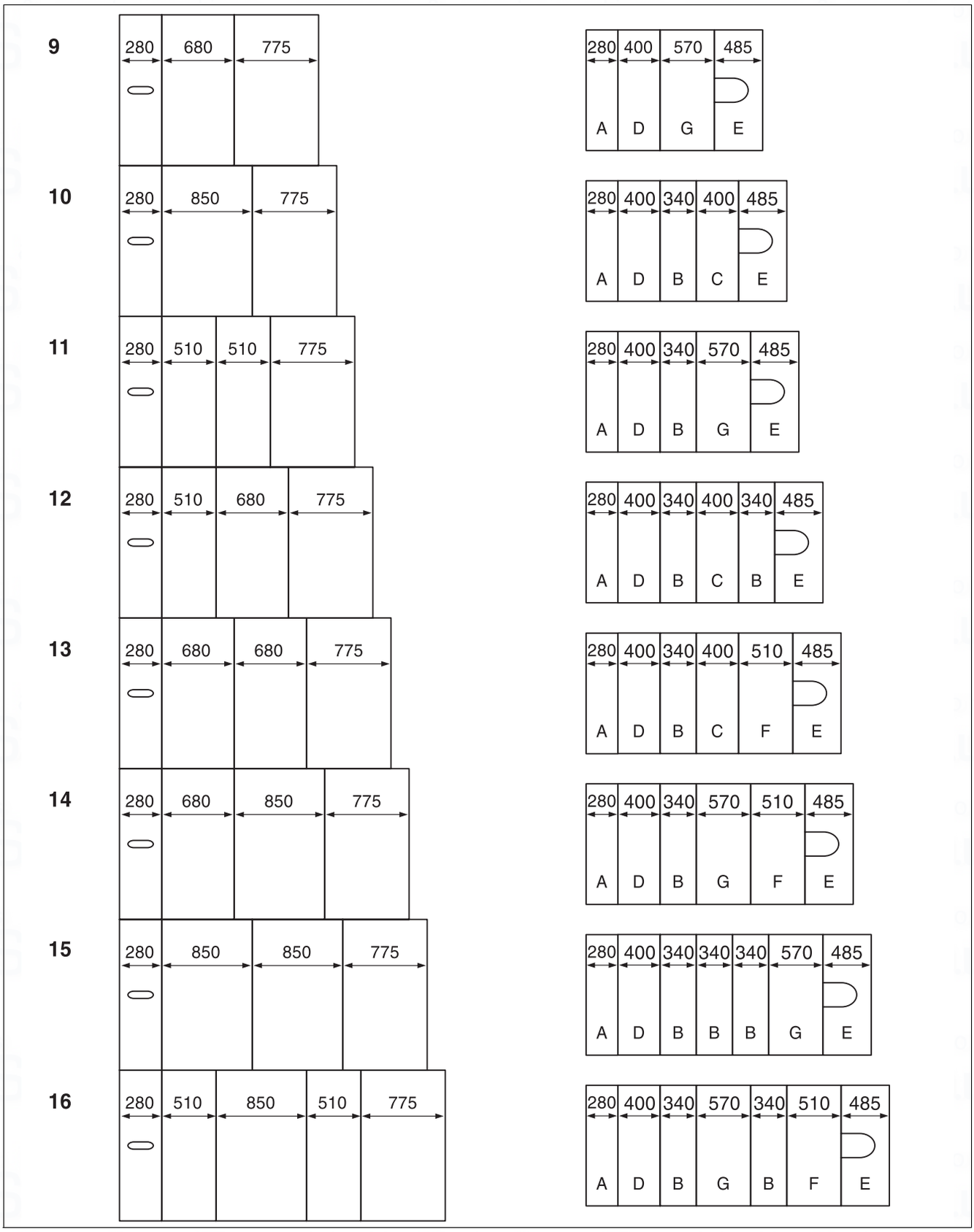

Fig. 46 Arrangement of side panels (left) and hoods (right) for the various boiler sizes (dimensions in mm)

- Hook the front hood ("A") into the slots on the lengthways bar and push forwards.
- Screw rear of hood "A" to each lengthways bar using one self-tapping screw.

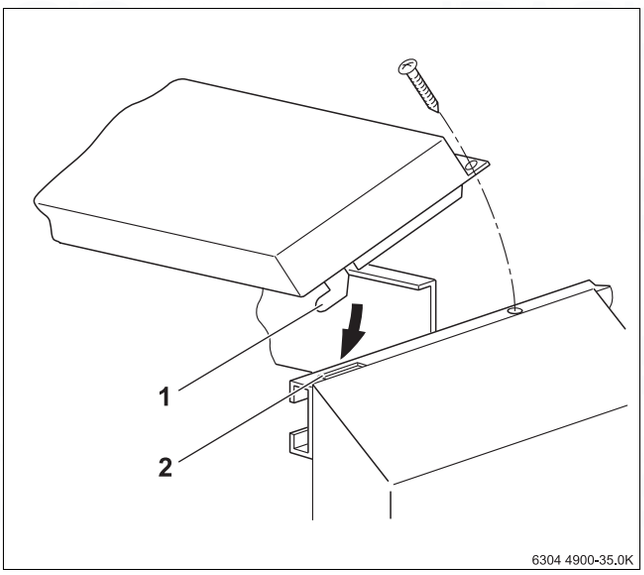

Fig. 47 Fitting the front hood "A"

1 Hooks
2 Slot in lengthways bar

- Push folded edge of 400 mm wide hood ("D") under the front hood.

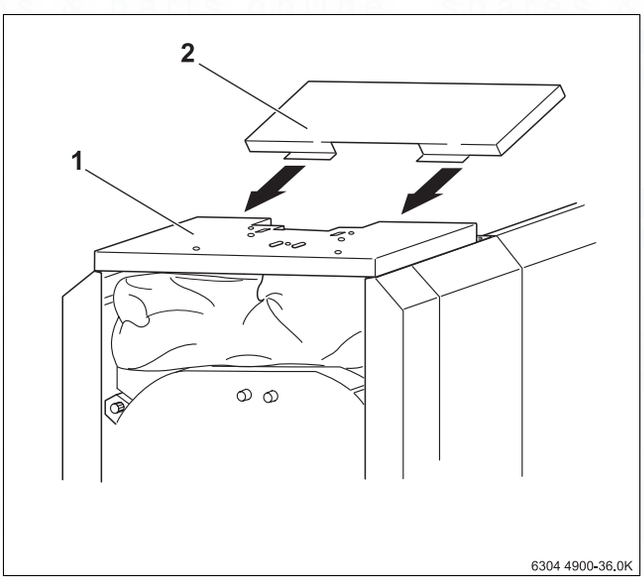

Fig. 48 Fitting hood "D"

1 Front hood
2 Hood "D"

Before the remaining hood sections are put in place, the control unit must be fitted, the capillary tubes fed to the sensor wells and the sensors placed in the sensor wells (→ see Chapter 4.16.1, page 33 ff.).

- Screw the upper boiler rear panel to the rear of the hood and the side panels.
- Screw the lower boiler rear panel with the cut-out for the fill and drain connection down onto the side panels.

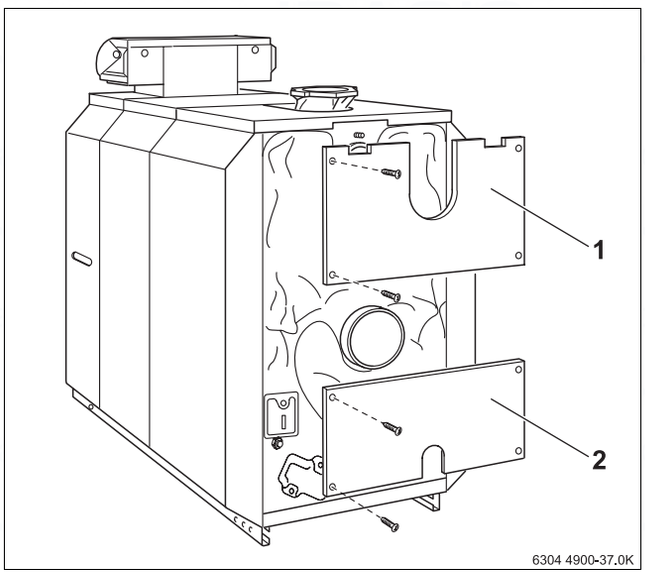

Fig. 49 Fitting the upper and lower boiler rear panels

1 Upper boiler rear panel
2 Lower boiler rear panel

- Screw left/right front panel section to the cast lug on the burner door, using four hexagon bolts for each.
- Hook burner door panel into the cut-outs in the front panel.

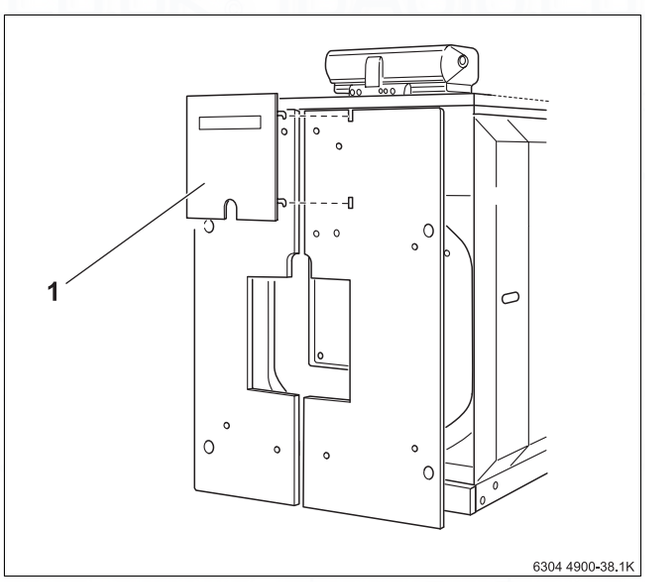

Fig. 50 Fitting the left and right front panel

1 Burner door panel

4.16 Making the electrical connection

This section explains how to install a Logamatic 4000 series control unit and a temperature sensor set.

DANGER: Risk to life from electric shock!

- Electrical work must only be carried out by registered electricians in possession of the necessary qualifications.
- Before opening the appliance, isolate all poles of the mains power supply and secure against unintentional reconnection.
- Please observe all installation instructions.

4.16.1 Installing the control unit

Fig. 51 shows the control unit and front cover hood "A" from behind.

- Loosen both screws on the terminal cover. Lift off the terminal cover.

Putting the control unit in place

- Fit the control unit at the front by inserting the hooks into the oval holes in the front boiler cover.
- Pull the control unit forwards and then tip back. The flexible hooks must latch into the rectangular openings at the rear of the front boiler cover.
- Screw the base of the control unit on the left and right of the cable duct on the front boiler hood using two self-tapping screws.

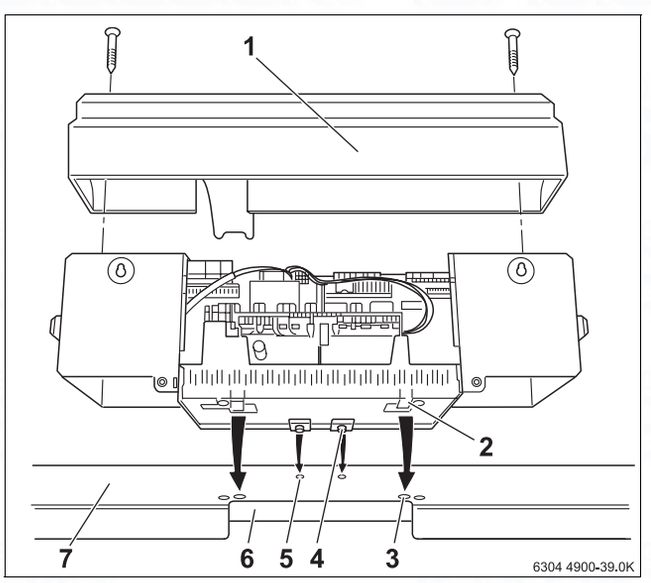

Fig. 51 Installing the control unit

1 Terminal cover
2 Flexible hook
3 Rectangular openings in the front boiler cover
4 Locking tabs
5 Oval holes in front boiler cover
6 Cable duct
7 Front boiler cover

Making the power supply connection

NOTICE: Appliance damage through damaged capillary tubes.

- Ensure that the capillary tubes are neither kinked nor squashed when uncoiling and routing them.

- Route the capillary tubes through the cable duct and unroll to the required length.
- Feed capillary tubes to the boiler test ports.
- Feed each sensor into the corresponding sensor well and secure it with its sensor holder (detailed view in → Fig. 52 has been turned through 180°).
- Screw cable entry (see detailed view → Fig. 53) on the left and right of the boiler rear panel.

Make a secure electrical connection to EN 50165 or the relevant international installation standards and local regulations.

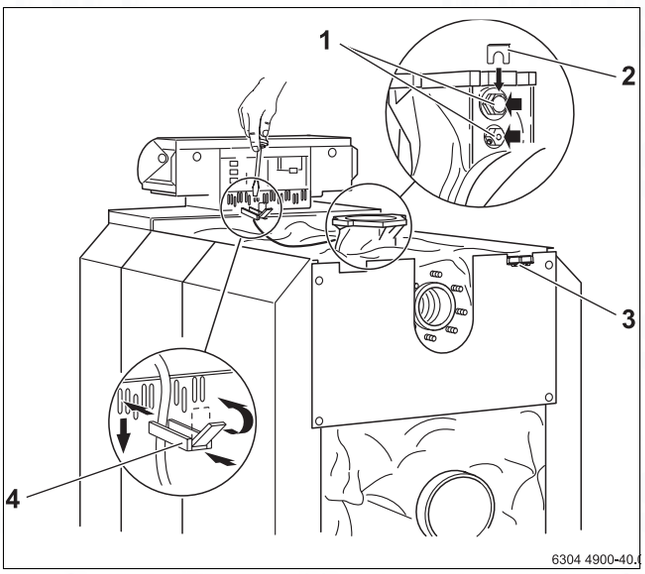

Fig. 52 Fastening the electrical leads

1 Sensor wells
2 Sensor retainer
3 Cable entry
4 Cable clip

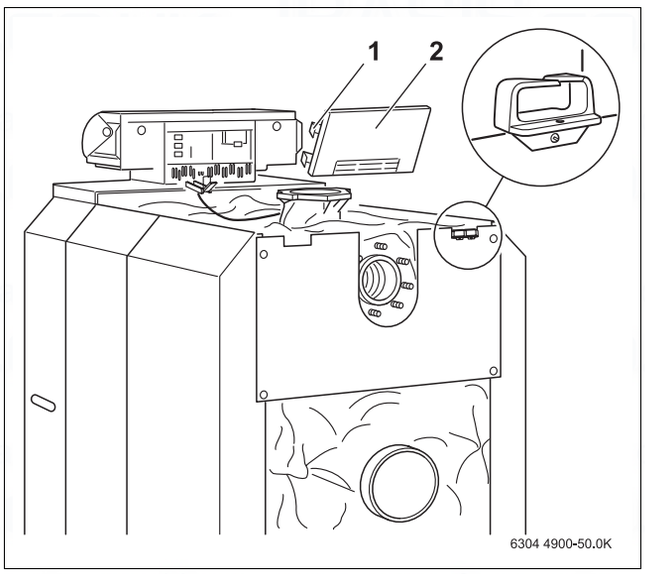

Fig. 53 Fitting the rear panel section

1 Side hook
2 Rear panel section (control unit)

- Establishing the electrical connection as shown in the wiring diagram. Take care to ensure correct cable and capillary pipe routing.

Secure all cables with cable clips.

- Insert cable clips with cable inside into the clip frame and secure by clamping it with the tab.

Fitting the rear panel section and terminal cover

- If necessary, push/cut the knock-out section out of the rear panel section.
- Hook the lower hook on the rear panel section into the clip frame and apply pressure at the top until the side hooks click into place.
- Screw terminal cover onto the control unit base again.

4.16.2 Installing the temperature sensor set

Both sensor wells have already been sealed in the flow (→ see Chapter 4.7, page 19).

The sensors (controller sensor TRK, sensor STB and Logamatic sensor FK or thermometer sensor) are inserted into the sensor wells.

> The STB sensor differs from the controller sensor in that it has a side recess.

The sensors must be arranged as follows:

- Push controller sensor TRK out of the sensor holder by pressing it gently.

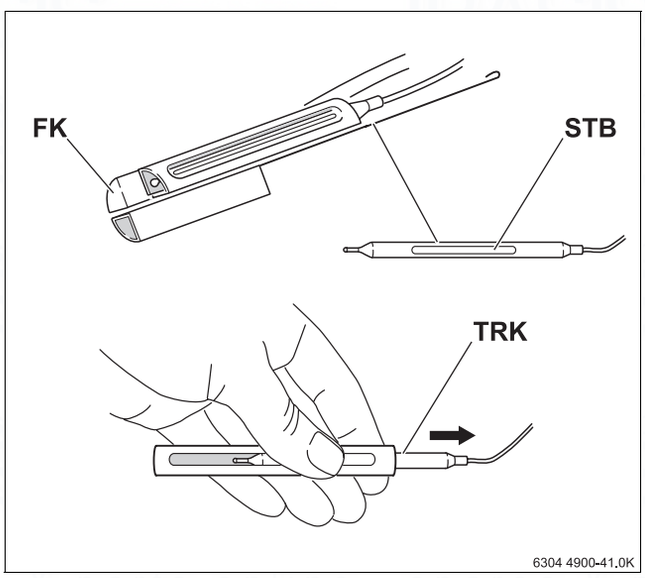

Fig. 54 Temperature sensor set

- Feed controller sensor into sensor well R½ " and secure with a screw.
- Feed both sensors, STB (high-limit safety cut-out) and Logamatic FK, and the two sensor blanking pieces into sensor well R¾ " and fix in place.

> If using control unit 4212, all sensors must be fed into the R¾ " sensor well. The R½ " sensor well is not assigned if using this control unit.

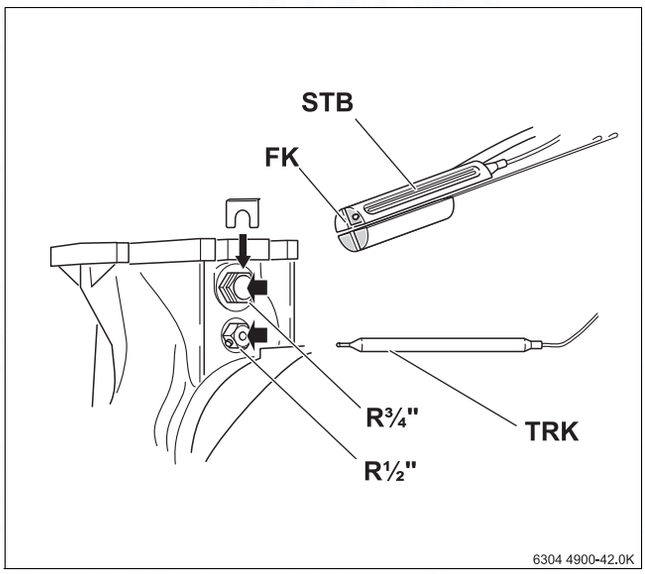

Fig. 55 Installing the temperature sensor set

5 Commissioning the heating system

This chapter describes the commissioning of the boiler with a control unit in the Logamatic 4000 series. The commissioning process for the different types of control unit is the same.

- Complete the commissioning report during commissioning (→ see Chapter 5.4, page 38).

NOTICE: Risk of boiler damage from contaminated combustion air!
- Ensure adequate ventilation.
- Do not use or store chlorinated cleaning agents or halogenated hydrocarbons (as contained in spray cans, solvents or cleaning agents, paints and adhesives for example) in the boiler room.
- Do not operate the heat generator when heavy dust contamination is present, e.g. following building work inside the boiler room.

- A burner contaminated during building work must be cleaned before commissioning.

5.1 Preparing the heating system for operation

- Create the normal required operating pressure for commissioning (sealed heating systems) or set the required capacity (open heating systems).

WARNING: Risk to health from potable water contamination!
- Always observe the regulations and standards applicable in your country for the prevention of contamination of potable water (e.g. by water from heating systems).
- Observe EN 1717.

- Check that the hot gas baffles have been inserted correctly.

For information on the quality of the heating water → see operating manual.

NOTICE: System damage due to temperature stresses!
If the heating system is filled when hot, the resulting temperature stresses can cause stress cracks. The boiler will then leak.
- Only fill the system when cold (the flow temperature should be no more than 40 °C).
- During operation, only fill the heating system via the approved WRAS filling method.
- Pay attention to the water quality as specified in the operator's log, and record the volume and quality of fill water used.

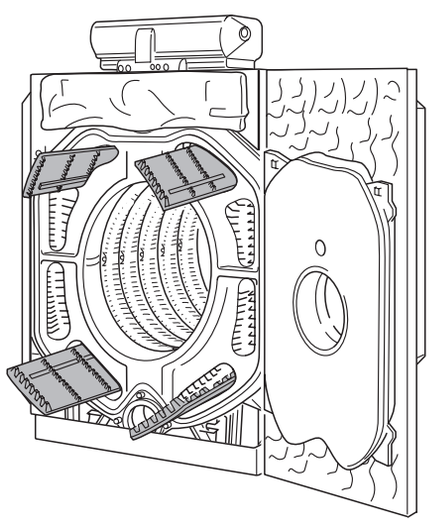

Fig. 56 Checking that hot gas baffles are seated correctly

5.1.1 Creating operating pressure (sealed heating systems)

On sealed heating systems the pressure gauge marker must be within the green field.

- Set the red needle on the pressure gauge to the required operating pressure (at least 1 bar overpressure).
- Top up the heating water via an approved WRAS method d.
- Vent the heating system during filling.

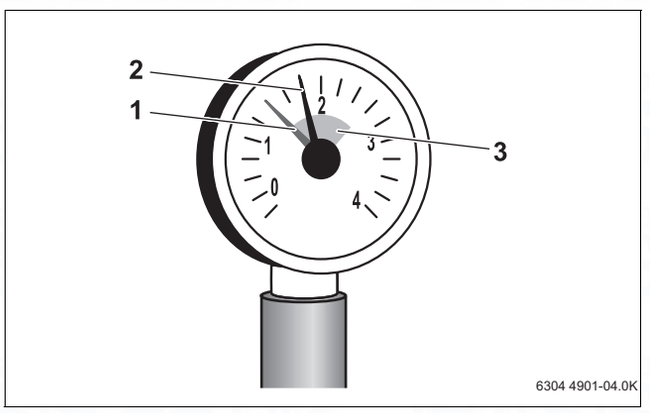

Fig. 57 Pressure gauge for sealed unvented systems

1 Red needle
2 Pressure gauge needle
3 Green band

5.1.2 Setting the capacity (open heating systems)

In open systems, the hydrometer needle must lie within the red field.

- Set the green needle on the hydrometer to the required capacity.
- Top up the heating water or drain via the boiler fill and drain valve until the required capacity has been reached.

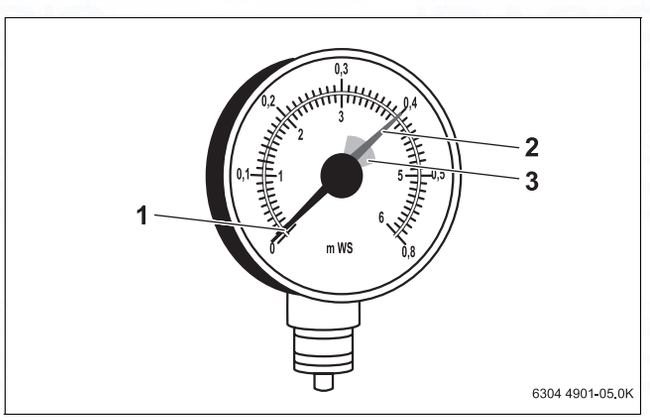

Fig. 58 Hydrometer for open systems

1 Hydrometer needle
2 Green needle
3 Red band

5.2 Start up the control unit

Please see the accompanying technical documentation for the 4000 series control unit for information about on how to start it up.

5.3 Starting the burner

- When commissioning the burner, follow the instructions in the technical documentation enclosed with the burner.
- Fill out the burner commissioning report.

5.4 Start-up report

▶ Sign all completed start-up work and enter the date.

	Start-up work	Page	Comments (signature)
1.	Pressure test on boiler supplied in loose sections	Page 20	
2.	Filling the heating system	Page 25	
3.	Perform a leak test on the heating system • Record the filling water quantity and composition in the operator's log (included with the technical documentation).	Page 25	
4.	Check the position of the hot gas baffles (the 16-section boiler has no hot gas baffles)	Page 36	
5.	Check the fuel line for leaks		
6.	Start up the control unit	See control unit documentation.	
7.	Starting the burner	See burner documentation	
8.	Check the flue gas temperature		
9.	Check flue for tightness		
10.	Check the soundness of the hot gas side		
11.	Enter the fuel used in the table provided in the operating instructions.		
12.	Provide the system user with information and hand over all relevant technical documentation		
13.	Confirm professional commissioning		
	Company details/signature/date		

Tab. 13 Start-up report

6 Shutting down the heating system

6.1 Standard shutdown

- Switch off the ON/OFF switch on the control unit (position "0").
  This switches off the boiler and all its components (such as the burner).
- Close the main fuel shut-off valve.

NOTICE: System damage due to frost!
When the heating system is switched off, it can freeze up if there is a frost.

- Leave the heating system permanently switched on.
- Drain the heating system and DHW pipework at the lowest possible point to protect the heating system against freezing while it is switched off.

NOTICE: System damage due to frost!
The heating system can freeze up during a power failure or if the power supply has been switched off.

- Check the "Control unit settings" to ensure the system remains operational (especially when there is a risk of frost).

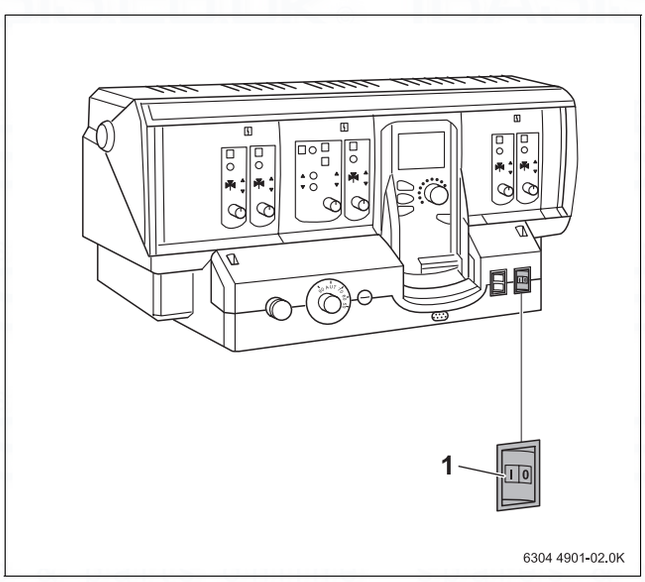

Fig. 59 Shutting down the heating system

1 ON/OFF switch

6.2 In an emergency

In the event of an emergency, e.g. a fire, proceed as follows:

- Never put yourself at risk of fatal injury. Your own safety is paramount.
- Close the main fuel shut-off valve.
- Isolate the heating system from the mains power supply via the heating system emergency stop switch or the corresponding domestic fuse.

7 Heating system inspection and maintenance

7.1 Why is regular maintenance important?

Heating systems should be regularly serviced for the following reasons:

- to maintain a high level of efficiency and to operate the system economically (low fuel consumption),
- to achieve a high level of operational reliability
- to maintain the cleanest possible combustion

Offer an annual inspection and as-required maintenance contract to your customer. The activities that must be contained in a contract can be found in the inspection and maintenance report (→ see Chapter 7.5, page 46 ff.).

Only use genuine Buderus spare parts. You can order spare parts from the spare parts catalogue.

7.2 Preparing the boiler for cleaning

▶ Shut down the heating system (→ see Chapter 6.1, page 39).

DANGER: Risk to life from electric shock!

▶ Before opening the appliance, isolate all poles of the mains power supply and secure against unintentional reconnection.

DANGER: Risk to life from explosion of flammable gases!

▶ Work on gas components must only be carried out by qualified and authorised gas fitters.

Opening the burner door

NOTICE: The casing parts may be damaged by opening the burner door.

▶ Unhook the front side panel sections before opening the burner door.

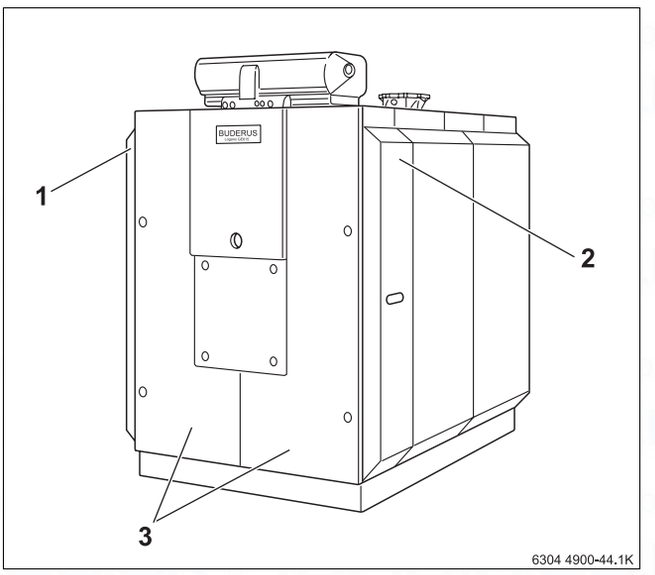

Fig. 60 Opening the burner door

1 Front side panel section (left)
2 Front side panel section (right)
3 Front panel section (burner door casing)

▶ Using the hand hole, lift the side panel sections slightly and remove. Do not remove the front panel section (burner door casing)

▶ Using a spanner, loosen the burner door fixing screws from the side.

▶ Swing out burner door.

7.3 Cleaning the boiler

The boiler can be cleaned with brushes and/or with wet cleaning. Cleaning equipment is available as an accessory.

7.3.1 Clean the boiler with cleaning brushes

▶ Take the hot gas baffle plates forwards out of the hot gas flues.

The 16-section boiler does not contain any hot gas baffles (→ see Chapter 4.11.4, page 23 ff.).

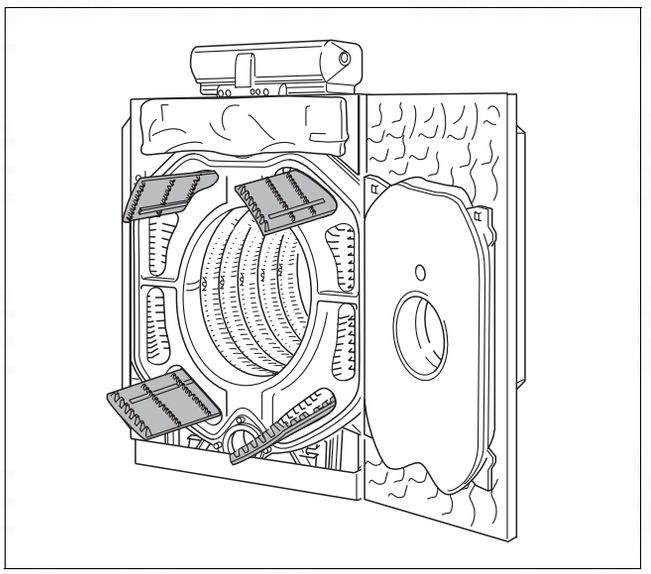

Fig. 61 Removing the hot gas baffle plates

- Remove lower boiler rear panel.
- Loosen tensioning springs below the flue outlet (→ see Fig. 41, page 29).
- Fold both ends of the lagging upwards and fasten with the tension springs.
- Remove the clean-out covers from the flue gas header.

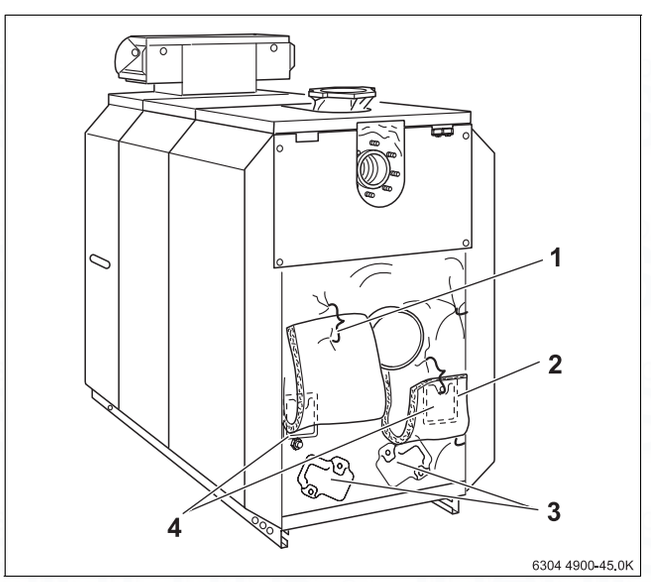

Fig. 62 Removing the cleaning cover

1 Lagging (folded upwards)
2 Lagging (folded upwards)
3 Clean-out cover on the rear section
4 Clean-out cover on the flue gas header

Cleaning brushes (optional extra)

Using the cleaning brushes ensures optimum cleaning of the boiler.

The various brush types available are shown in → Fig. 63.

For brush dimensions and where to use the brushes, please see → Tab. 14.

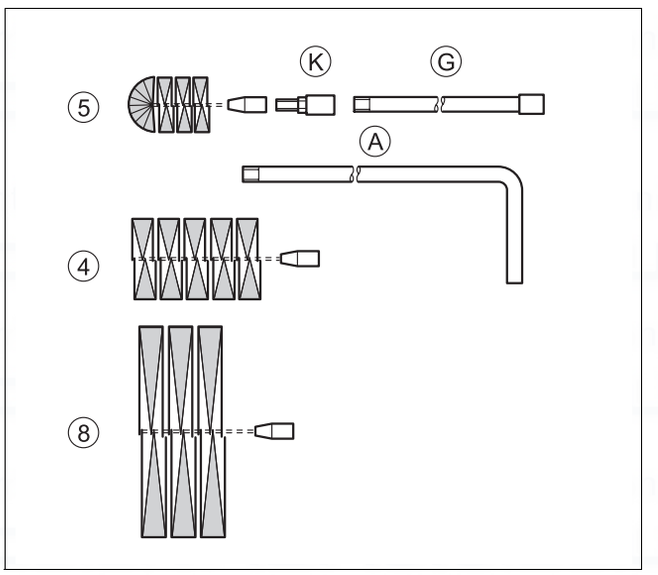

Fig. 63 Cleaning brushes

Number of sections	Brush ID	Brush dimensions (diameter in mm)	Used in	Shaft designation K = adapter piece	Length of shafts in mm
9 - 11	4	75x110	Secondary heating surface	A + K	2000
	5	60x73	Secondary heating surface		
	8	200x80	Combustion chamber		
12 -14	4	75x110	Secondary heating surface	A + K	2500
	5	60x73	Secondary heating surface		
	8	200x80	Combustion chamber		
15 -16	4	75x110	Secondary heating surface	A + G + K	2000 + 1000
	5	60x73	Secondary heating surface		
	8	200x80	Combustion chamber		

Tab. 14 Brush dimensions and brush application locations

- Clean the upper and lower hot gas flues with cleaning brushes 4 and 5.
- Clean the combustion chamber with cleaning brush 8.
- Remove the combustion residues by sweeping them forwards through the combustion chamber opening and through the clean-out openings on the rear section and the flue gas header (→ Fig. 62, page 41).
- Check packing cords on the clean-out openings and burner door. Replace damaged or hardened packing cords.

Packing cords are available from your nearest branch.

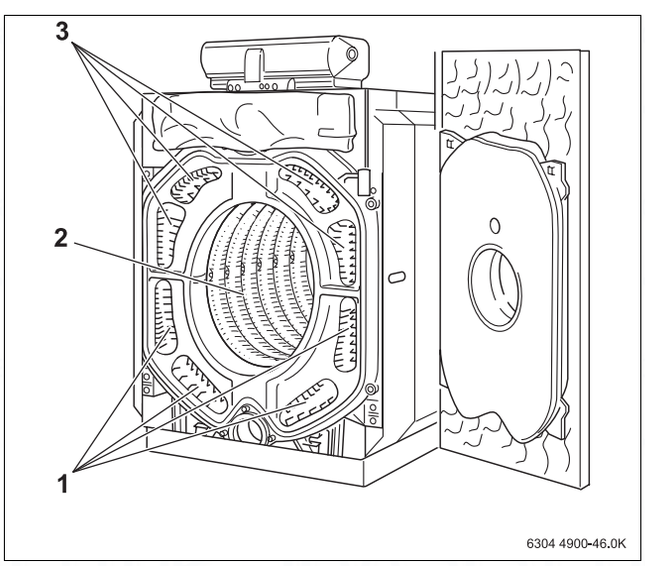

Fig. 64 Cleaning the hot gas flues

1 Lower hot gas flues
2 Combustion chamber
3 Upper hot gas flues

- Clean hot gas baffles with the cleaning brushes.
- Insert hot gas baffles into hot gas flues (→ Fig. 30,page 23 and Fig. 31 and Fig. 32,page 24).
- Seal clean-out covers and burner door. Tighten screws evenly. Hook the front side panels back in place. Put sealing plug back in place if necessary.
- Fold the rear section lagging down and pull together under the flue outlet using tension springs.
- Put the lower boiler panel back in place.

7.3.2 Wet cleaning (chemical cleaning)

When wet cleaning, use a cleaning agent commensurate with the degree of soiling (encrustations or soot).

Proceed in the same sequence as if cleaning with cleaning brushes (→ see Chapter 7.3.1, page 40).

Follow instructions for the cleaning agent and cleaning equipment.
In some circumstances you may need to proceed differently from the method described here.

- Cover the control unit with foil to prevent spray from entering it.
- Spray cleaning agent evenly into the hot gas flues.
- Close burner door and start the heating system.
- Heat the boiler water temperature to at least 70 °C.
- Take the boiler out of operation.
- Allow boiler to cool; open burner door.
- Brush out the hot gas flues.

7.4 Checking the operating pressure

A distinction is generally made between open vented and sealed unvented heating systems. In practice, open vented heating systems are now only rarely installed.

For information on the quality of the heating water (→ see operating manual).

NOTICE: System damage due to frequent topping up!

The heating system may be damaged, depending on water quality, by corrosion or scaling if you frequently need to top up your system with water.

- Ensure that the heating system is vented correctly.
- Check the heating system for leaks and the expansion vessel for correct operation.
- Observe the requirements in respect of water quality.

NOTICE: System damage due to temperature stresses!

Temperature stresses can cause cracks if you fill your heating system when hot. The boiler will then leak.

- Only fill the system when cold (the flow temperature should be no more than 40 °C).
- During operation, via an approved WRAS filling method and never directly fill into the boiler.

7.4.1 Checking the operating pressure (sealed systems)

On sealed heating systems the pressure gauge marker must be within the green field.

Ensure that the red pressure gauge needle is set to the required operating pressure.

Create an operating pressure (overpressure) of at least 1 bar.

- Check the operating pressure of the heating system.

The operating pressure is too low if the pressure gauge needle indicates below the green field. The system needs to be topped up with water.

- Top up with water until the required operating pressure is reached.
- Vent the heating system during filling.

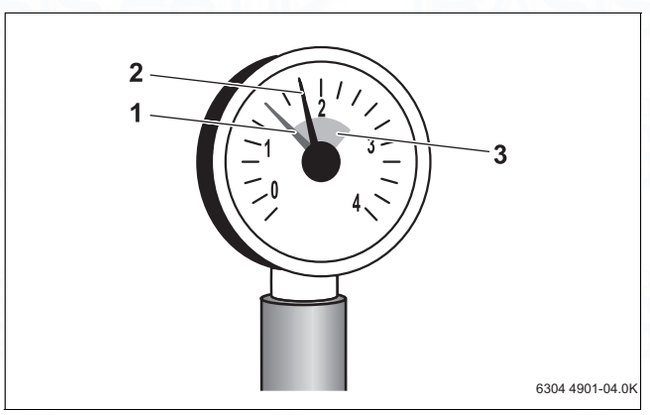

Fig. 65 Pressure gauge for sealed unvented systems

1 Red needle
2 Pressure gauge needle
3 Green band

7.4.2 Checking the fill level (open systems)

In open systems, the hydrometer needle must lie within the red field.

- Check that the hydrometer needle is within the red field.
- Top up with water if the hydrometer needle is below the red field.

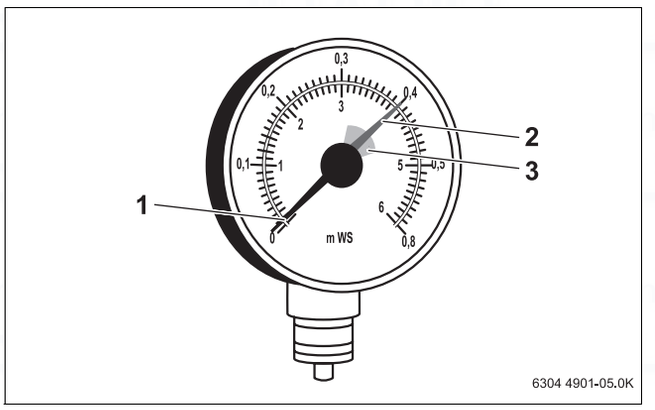

Fig. 66 Hydrometer for open systems

1 Hydrometer needle
2 Green needle
3 Red band

7.5 Inspection and maintenance reports

▶ Sign and date the completed inspection work.

The inspection and maintenance reports are also designed as templates and may be photocopied.

	Inspection work	Page	Date:_____	Date:_____	Date:_____
1.	Check the general condition of the heating system		☐	☐	☐
2.	Visual inspection and function check of the heating system		☐	☐	☐
3.	Check the gas and water-carrying components of the system for: • leaks during operation • tightness test • visible signs of corrosion • signs of ageing		☐	☐	☐
4.	Check the combustion chamber and heating surfaces for contamination. Shut down the system first.	42	☐	☐	☐
5.	Check the burner (see burner documentation)		☐	☐	☐
6.	Check the flue gas pipe for proper functioning and safety (see burner documentation)		☐	☐	☐
7.	Check water pressure and inlet pressure of the diaphragm expansion vessel on sealed heating systems	44ff.	☐	☐	☐
8.	Check water pressure and inlet pressure on open heating systems	44ff.	☐	☐	☐
9.	Check the DHW cylinder and corrosion protection anode for proper functioning (see DHW cylinder documentation)		☐	☐	☐
10.	Check the control unit setting (see control unit documentation)		☐	☐	☐
11.	Record the final checks of the inspection work, incl. actual values and test results		☐	☐	☐
	Confirm professional inspection		Company stamp/ signature	Company stamp/ signature	Company stamp/ signature

Tab. 15 Inspection report

If during inspection work conditions are identified that require maintenance, it must be carried out on an as-required basis. If top-up water is added, the quality of this water must correspond to the specifications in the enclosed operating manual.

	Date:____	Date:____	Date:____	Date:____	Date:____	Date:____	Date:____
1.	☐	☐	☐	☐	☐	☐	☐
2.	☐	☐	☐	☐	☐	☐	☐
3.	☐	☐	☐	☐	☐	☐	☐
4.	☐	☐	☐	☐	☐	☐	☐
5.	☐	☐	☐	☐	☐	☐	☐
6.	☐	☐	☐	☐	☐	☐	☐
7.	☐	☐	☐	☐	☐	☐	☐
8.	☐	☐	☐	☐	☐	☐	☐
9.	☐	☐	☐	☐	☐	☐	☐
10.	☐	☐	☐	☐	☐	☐	☐
11.	☐	☐	☐	☐	☐	☐	☐
	Company stamp/ signature	Company stamp/ signature	Company stamp/ signature	Company stamp/ signature	Company stamp/ signature	Company stamp/ signature	Company stamp/ signature

Tab. 16 Continuation

	As-required maintenance work	Page	Date:_____	Date:_____	Date:_____
1.	Shutting down the heating system	39	☐	☐	☐
2.	Remove and clean the hot gas baffle plates	41	☐	☐	☐
3.	Clean the hot gas flues (heating surfaces)	42	☐	☐	☐
4.	Clean the combustion chamber	42	☐	☐	☐
5.	Cleaning the flue gas collector	42	☐	☐	☐
6.	Insert the hot gas baffles	23ff.	☐	☐	☐
7.	Check gaskets/packing cords on the burner and burner door and replace if required	42	☐	☐	☐
8.	Commissioning the heating system	36	☐	☐	☐
9.	Record the final checks of the maintenance work, incl. measurements and test results		☐	☐	☐
10.	Check the function and operational safety		☐	☐	☐
	Confirm professional inspection		Company stamp/ signature	Company stamp/ signature	Company stamp/ signature

Tab. 17 Maintenance report

	Date:_____	Date:_____	Date:_____	Date:_____	Date:_____	Date:_____	Date:_____
1.	☐	☐	☐	☐	☐	☐	☐
2.	☐	☐	☐	☐	☐	☐	☐
3.	☐	☐	☐	☐	☐	☐	☐
4.	☐	☐	☐	☐	☐	☐	☐
5.	☐	☐	☐	☐	☐	☐	☐
6.	☐	☐	☐	☐	☐	☐	☐
7.	☐	☐	☐	☐	☐	☐	☐
8.	☐	☐	☐	☐	☐	☐	☐
9.	☐	☐	☐	☐	☐	☐	☐
10.	☐	☐	☐	☐	☐	☐	☐
	Company stamp/ signature	Company stamp/ signature	Company stamp/ signature	Company stamp/ signature	Company stamp/ signature	Company stamp/ signature	Company stamp/ signature

Tab. 18 Continuation

8 Faults

Faults in the heating system are displayed on the control unit display. For further information on the fault displays please refer to the relevant control unit maintenance instructions.

NOTICE: System damage due to frost!
The heating system can freeze up if it has been switched off through a fault shutdown.

- Rectify the fault immediately and restart the heating system.
- Where that is not possible, drain the heating and DHW pipework at the lowest point.

Burner faults

A burner fault is also indicated by the fault lamp on the burner. For further information on burner faults, please refer to the burner technical documentation.

NOTICE: System damage!
Repeated pressing of the reset button can damage the ignition transformer on the burner.

- Do not press the reset button more than three times in a row.

To reset burner faults:

- Press burner reset button.

Notes

spares & parts online IBASIS.CO.UK

Notes

spares & parts online IBASIS.CO.UK

Buderus

Cotswold Way, Warndon, Worcester WR4 9SW
Customer service: 0844 892 3004
Technical support: 0844 892 4224

www.buderus-commercial.co.uk

In the UK and IE, Buderus is a brand name
of Bosch Thermotechnology Ltd.

Bosch Thermotechnik GmbH
Sophienstrasse 30-32
D-35576 Wetzlar
www.buderus.de
info@buderus.de

C & F Quadrant Ltd.
Unit L40 Cherry Orchard Industrial Estate
Cherry Orchard, Dublin 10
Tel.: 01.6305700
Fax.: 01.6305706 / 01.6305715
www.cfquadrant.ie
E-mail: sales@cfquadrant.ie

Middle East and Caucasian Area

Bosch Termoteknik Dış Ticaret A.Ş.
İstanbul Deri ve Endüstri Serbest Bölgesi
T-10 Parsel 34975 Tuzla
İstanbul / Turkey
Tel.: +90 216 581 03 00

Products manufactured by
Bosch Thermotechnik GmbH
Sophienstrasse 30-32
D-35576 Wetzlar

www.buderus.com

Buderus

spares & parts online IBASIS.CO.UK