INSTALLATION INSTRUCTIONS

CASCADE UNIT

FOR WALL HUNG GAS-FIRED CONDENSING BOILER GB162-65/80/100

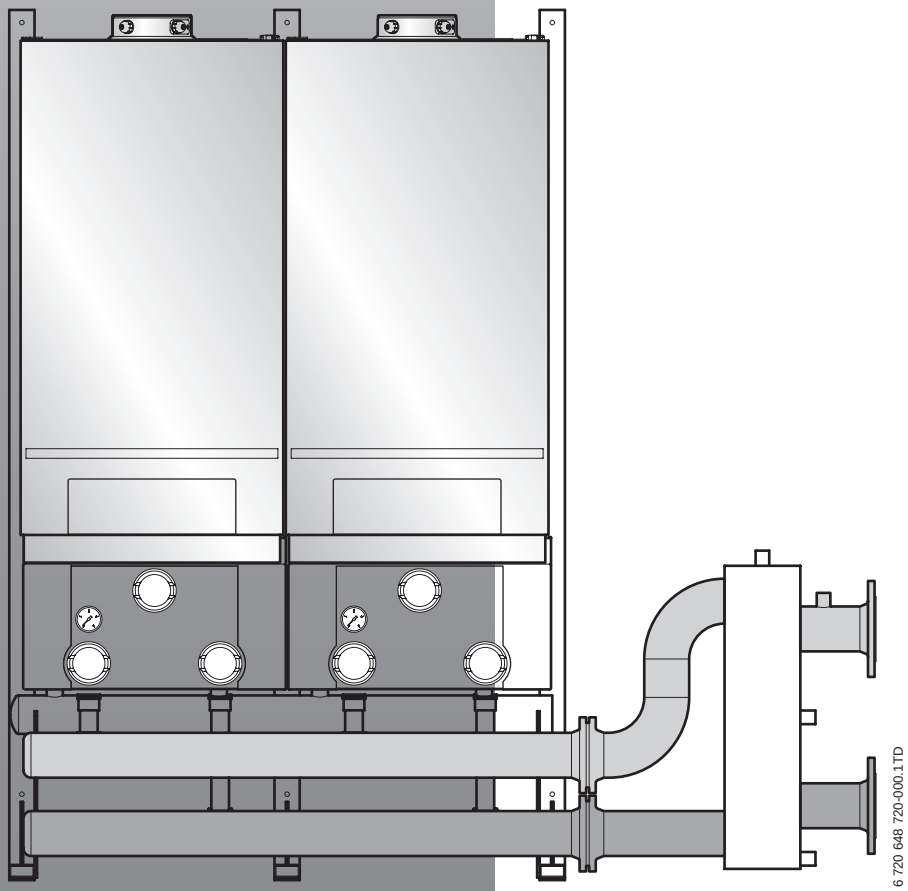

UK/IE

WORCESTER
Bosch Group

6 720 648 720 (2011/07)

Product overview

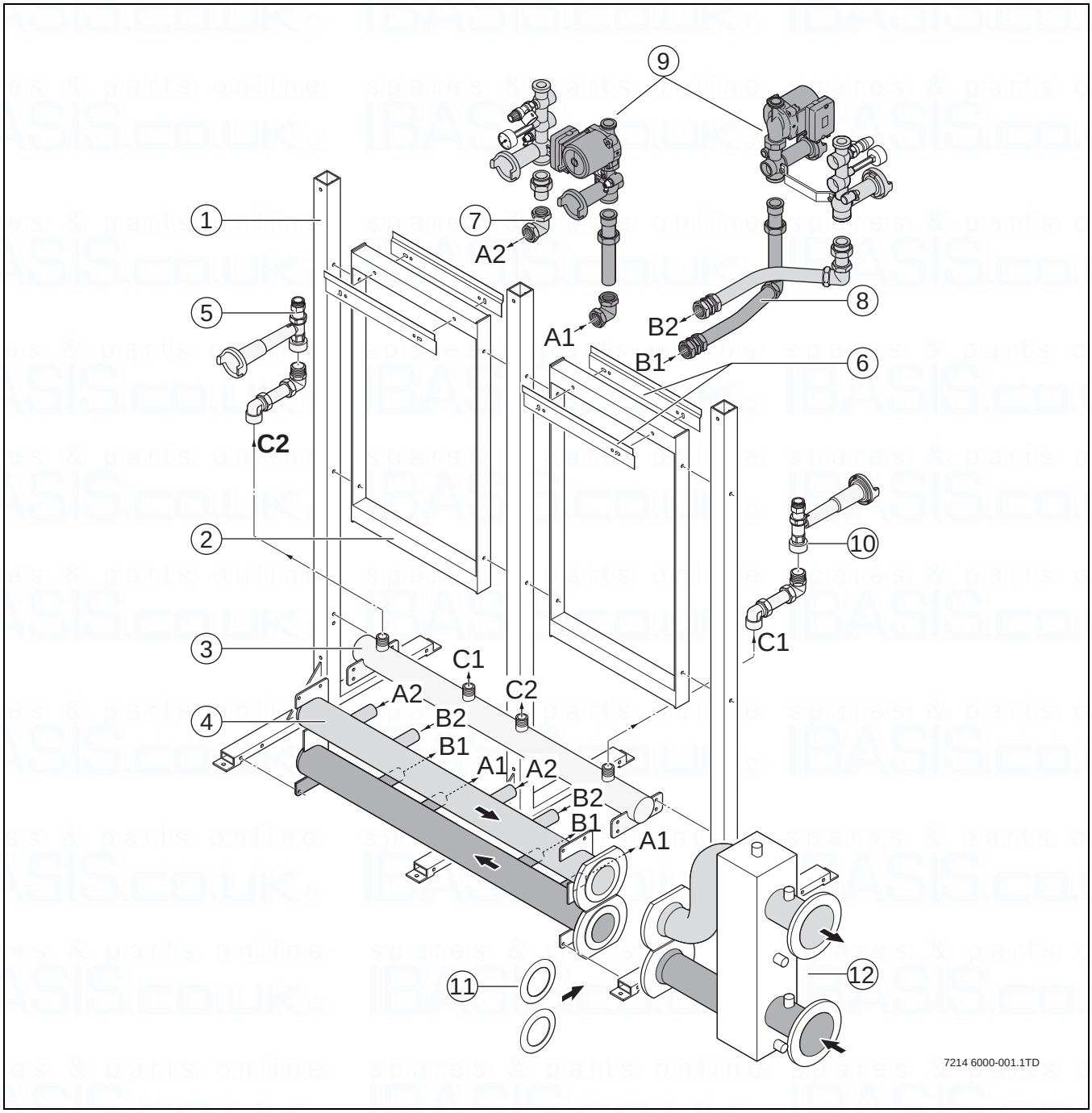

Fig. 1 Overview of cascade frame

1 Supports
2 Connecting frame
3 Main gas pipe
4 Flow and return header
5 Gas connection kit TL-inline
6 Mounting bracket
7 Boiler connection set TL-inline
8 Boiler connection set TR-back-to-back
9 Boiler assembly connection kit
10 Gas connection kit TR-back-to-back
11 Flange
12 Low loss header

CONTENTS

1 Key to symbols 4
1.1 Explanation of symbols 4

2 General points 5

3 Items supplied with unit 6

4 Dimensions 8

5 Cascade frame installation 10
5.1 Boiler assembly and pump group installation 10
5.2 Installing the insulation 11

1 KEY TO SYMBOLS

1.1 EXPLANATION OF SYMBOLS

WARNINGS

⚠	Warnings in this document are framed and identified by a warning triangle which is printed on a grey background.

⚠	Electrical hazards are identified by a lightning symbol surrounded by a warning triangle.

Keywords indicate the seriousness of the hazard in terms of the consequences of not following the safety instructions.

- **NOTE** indicates that material damage may occur.
- **CAUTION** indicates that minor to medium injury may occur.
- **WARNING** indicates that serious injury may occur.
- **DANGER** indicates possible risk to life.

IMPORTANT INFORMATION

Important information in cases where there is no risk of injury or material losses is identified by the symbol shown on the left. It is bordered by horizontal lines above and below the text.

ADDITIONAL SYMBOLS

Symbol	Meaning
▶	a step in an action sequence
→	a reference to a related part in the document or to other related documents
•	a list entry
–	a list entry (second level)

Table 1

2 GENERAL POINTS

The installation instructions for cascade systems with GB162 appliances are provided to enable correct and easy installation.

The modular cascade frame consists of a number of supports with connecting frames which are screwed together during installation.

The compact dimensions of the individual cascade frame parts enable simple and quick installation.

3 ITEMS SUPPLIED WITH UNIT

CASCADE FRAME (→ FIG. 1)

- Supports
- Connecting frame
- Main gas pipe
- Flow and return header
- Boiler connection kit
- Flange seals
- Low loss header
- Blank flanges
- Rubber pump seals
- Fixings
- Installation instructions.

BOILER (→ FIG. 2)
(TO BE ORDERED FROM YOUR SUPPLIER)

- Mounting bracket
- Boiler
- Siphon
- Installation instructions.

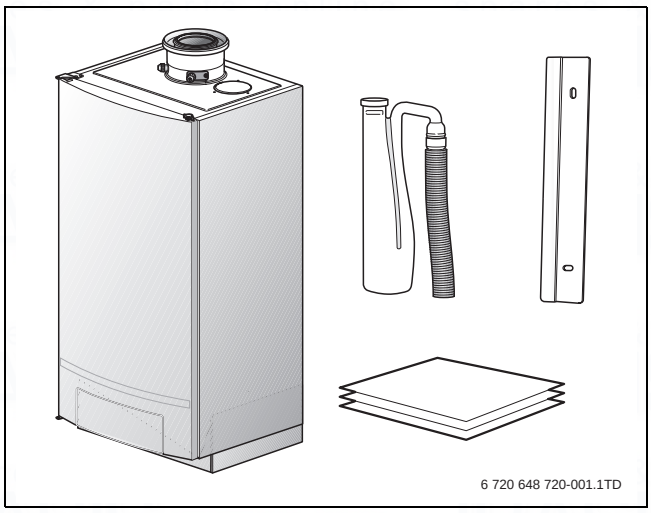

Fig. 2 Items supplied with the boiler assembly

PUMP GROUP (→ FIG. 3)
(TO BE ORDERED FROM YOUR SUPPLIER)

- Connection kit
- Installation instructions.

The connection kit consists of:

- Maintenance valves
- Drain cock
- Gas isolation valve
- Pressure relief valve
- Non-return valve
- Pump
- Pressure gauge.

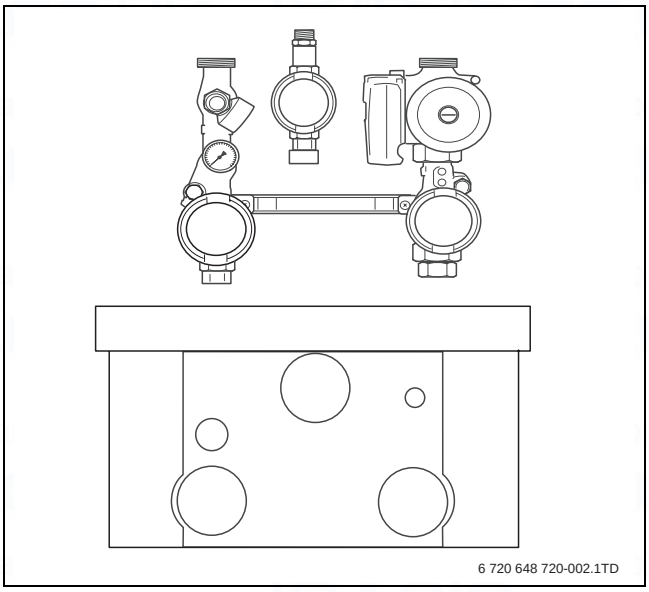

Fig. 3 Items supplied with pump group

Worcester supplies cascade systems in TL and TR configurations:

TL: INLINE INSTALLATION

All boiler assemblies are in a line enabling an easy-to-monitor installation in a narrow room.

TR: BACK-TO-BACK INSTALLATION

The boiler assemblies are located on both sides of the frame and are installed back-to-back to create a compact installation which ideally suits rectangular rooms and which ensures the best possible access to all boilers.

Depending on the desired output, a choice can be made between different types.

BOILER ASSEMBLY CONNECTION KIT

The connection kit can be used for the 65-kW, 80-kW and 100-kW version. The connection kit includes a pressure relief valve, a non-return valve, a pump and isolating valves.

Low loss header	TL-configuration (inline)	TR-configuration (back-to-back)
2½"	TL2, TL3	TR2
3"	TL4	TR3, TR4
4"	TL5, TL6, TL7, TL8	TR5, TR6, TR7, TR8

Table 2 Low loss header configuration

BEND SETS WITH LOW LOSS HEADER

The GB162 cascade system can be installed in various configurations (→ fig. 4). By using the bend set the low loss header can be installed at an angle to the boilers. The gas pipe is reversible so that the gas connection can be at the other side of the boilers to the flow and return connections to the header.

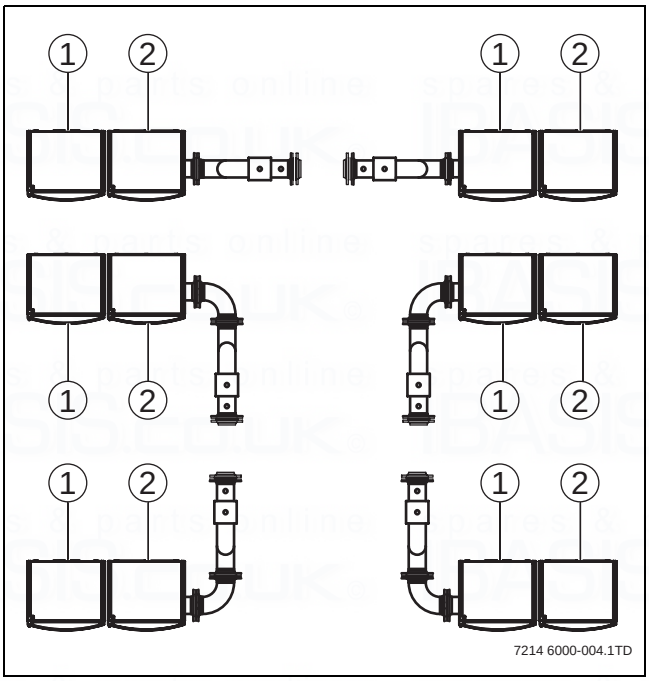

Fig. 4 Cascade system configuration varieties

4 DIMENSIONS

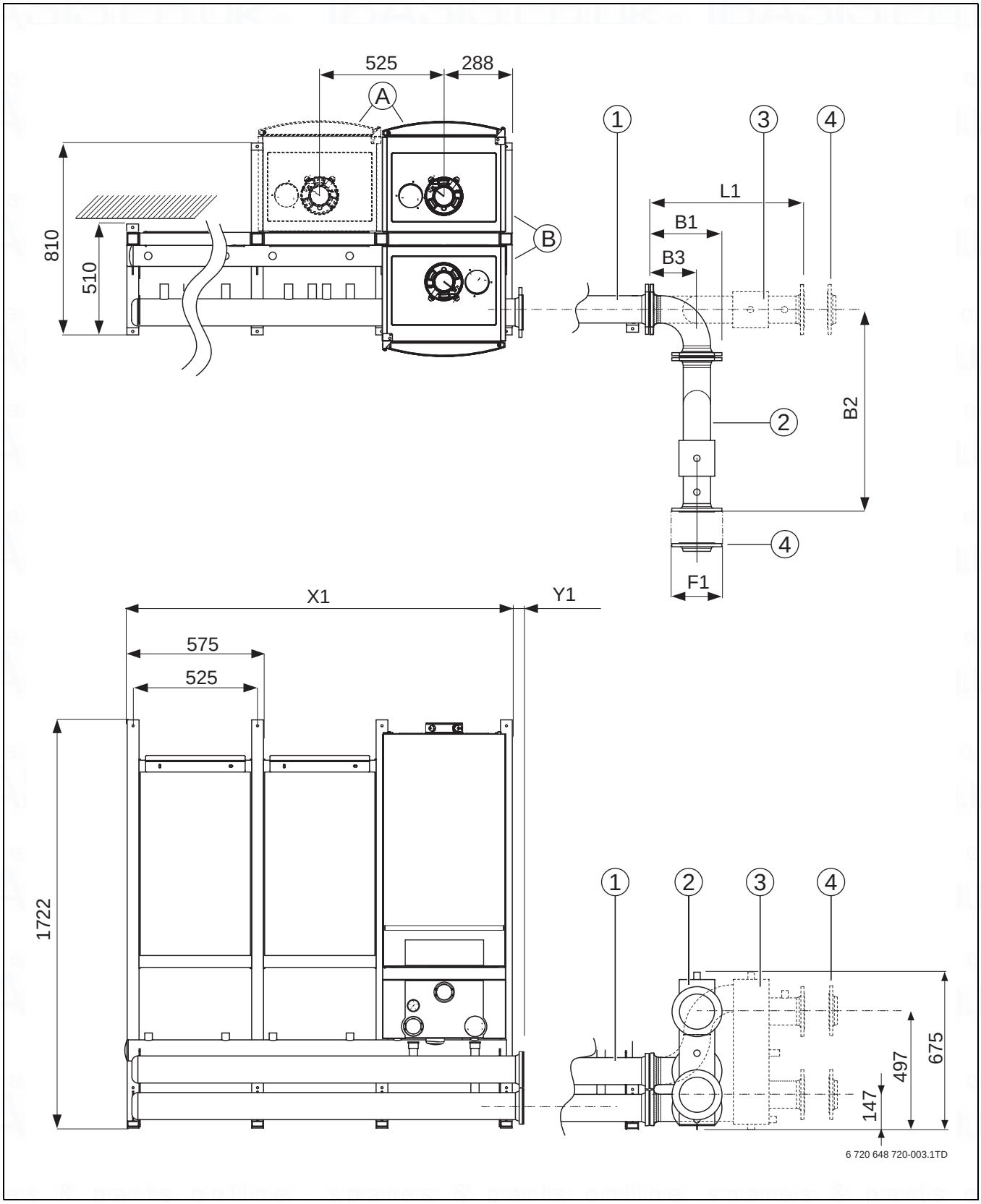

Fig. 5 Dimensions of cascade systems 1

A TL-inline configuration
B TR-back-to-back installation

1 Flow and return header
2 Low loss header with bend set
3 Low loss header, straight
4 Enclosed welding flanges

Cascade system	Length [mm] X1 + Y1		Width [mm]
TR2	575 + 38 =	613	992
TR3, TR4	1100 + 42 =	1142	992
TR5, TR6	1625 + 45 =	1670	992
TL7, TR8	2150 + 45 =	2195	992

Table 3 TR-back-to-back configurations

CAUTION:

- The dimensional tolerance is ± 5%.

Cascade System	Length [mm] X1 + Y1		Width [mm]
TL2	1100 + 38 =	1138	575
TL3	1625 + 38 =	1663	575
TL4	2150 + 42 =	2192	575
TL5	2675 + 45 =	2720	575
TL6	3200 + 45 =	3245	575
TL7	3725 + 45 =	3770	575
TL8	4250 + 45 =	4295	575

Table 4 TL-inline configurations

Cascade system	Header [inch]		Length [mm]	B1 [mm]	B2 [mm]	B3 [mm]	L1 [mm]	F1 [flange dimension in mm]
TL2, TL3, TR2	2½ "	straight	488	–	–	–	488	Blank flange C2631 37.2 NW 65/76.1 PN6
		right-angled	213	213	621	133	–	
TL4, TR3, TR4	3"	straight	571	–	–	–	571	Blank flange C2631 37.2 NW 80/88.9 PN6
		right-angled	252	252	728	157	–	
TL5, TL6, TL7, TL8, TR5, TR6, TR7, TR8	4"	straight	651	–	–	–	651	Blank flange C2631 37.2 NW 100/114.3 PN6
		right-angled	313	313	849	198	–	

Table 5 Header dimensions

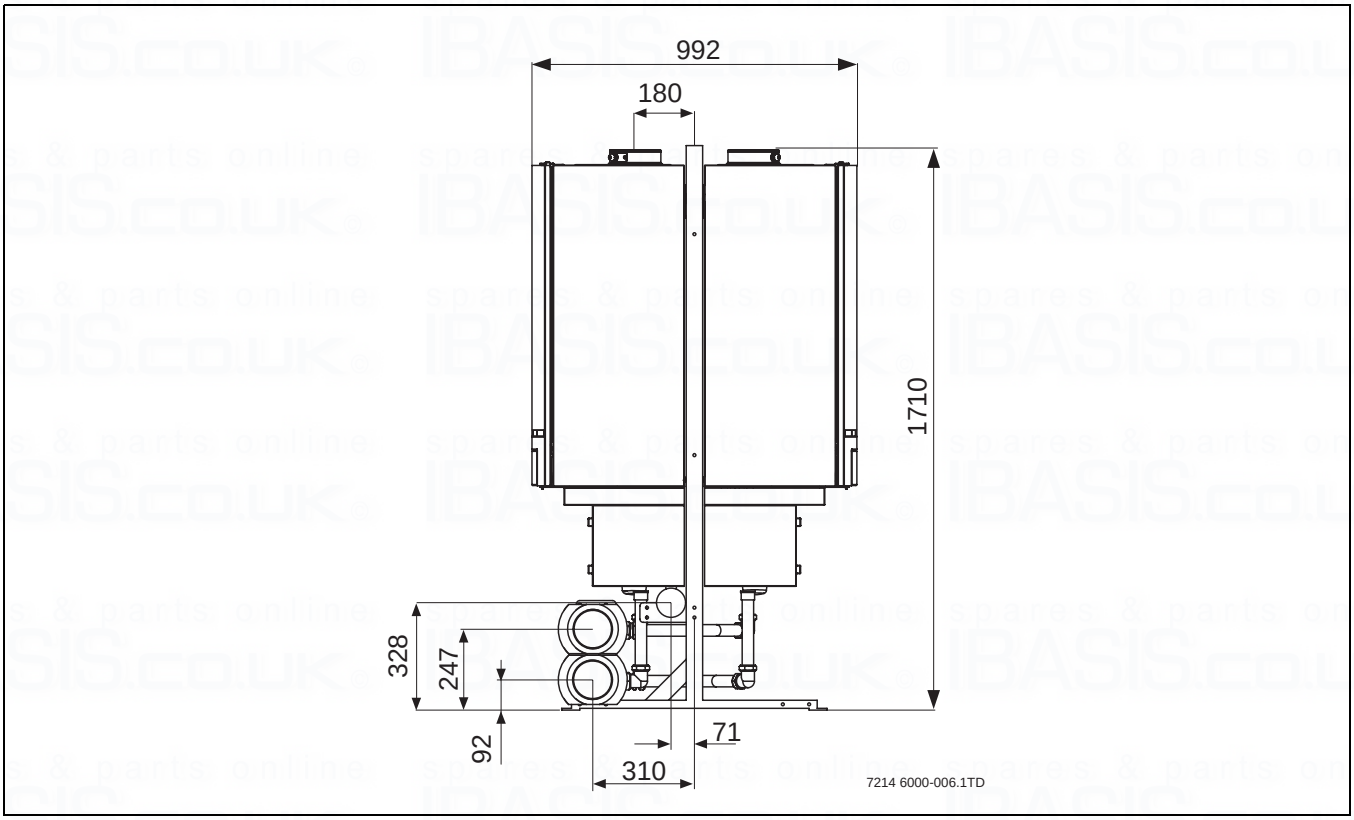

Fig. 6 Dimensions of cascade systems 2

5 CASCADE FRAME INSTALLATION

CAUTION:

- Make sure that the surface the cascade system is to be installed on is flat.
- Use a spirit level when installing the cascade system.
- Check that the load-bearing capacity of the floor is sufficient for the weight of the installation (approx. 100 kg for each boiler with accessories).

- Fix the frame onto the first leg of the cascade unit. Use the M8 x 70 screws for this.

CAUTION:

Make sure that the slots for the boiler mounting bracket are at the top of the frame.

- Now fix the next leg and continue fitting until the cascade unit is compelte.
- Position the frame into its final position.
- Adjust the frame so that it is in the right position and so that it is level both horizontally and vertically. Fit additional washers under the leg until level.
- Secure the frame to the floor. Ensure bolts are aligned to the legs. Do not bend or place the leg under stress to make it fit.
- Install the main gas pipe. Use the M8 x 70 screws for this. Do not fully tighten the screws yet.
- Install the header pipe. Use the M8 x 70 screws for this. Do not fully tighten the screws yet.
- Fit the boiler mounting brackets on the top of the frame. Install the nuts at the rear of the frame. The underside of the bracket should be level with the underside of the frame. Use the M8 x 65 screws for this.

CAUTION:

For TR-back-to-back configurations, both boiler mounting brackets are fitted simultaneously, using the same screws. Only use M8 x 65 screws to secure the mounting brackets.

5.1 BOILER ASSEMBLY AND PUMP GROUP INSTALLATION

- Hang the first boiler on the cascade frame as shown in fig. 7 or fig. 8.

You must observe the installation sequence indicated in fig. 7 and fig. 8 when installing the boilers.

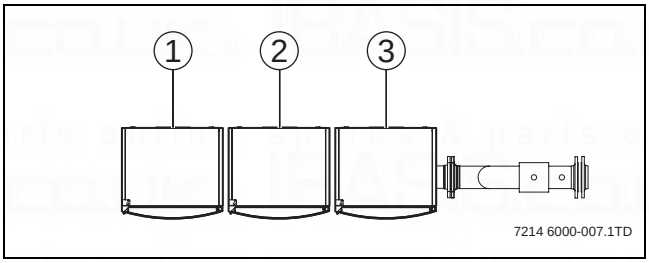

Fig. 7 Installation sequence for a TL-inline configuration

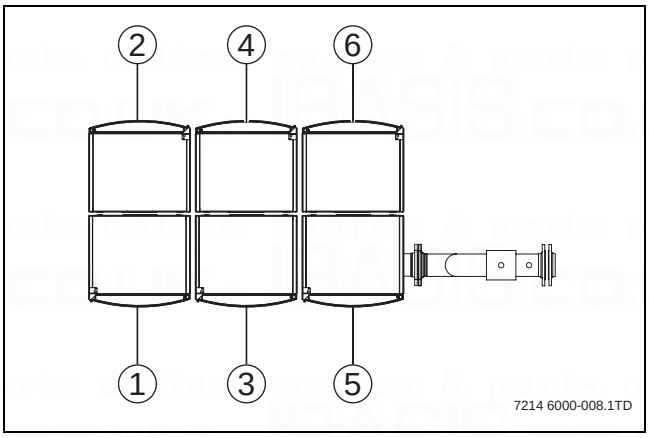

Fig. 8 Installation sequence for TR-back-to-back configuration

- Put the boiler in the correct position and level it horizontally and vertically. Use the set screws on the lower rear of the boiler to adjust it.
- Connect the pump group (→ GB162 Installation and service instructions).
- Remove the protective yellow caps from the main gas pipe.
- Apply PTFE tape to the screw thread connections.
- Connect up the gas connection pipe between the gas valve and the main gas pipe. Use PTFE tape to create a perfect seal.
- Remove the protective caps from the header.
- Remove all red paint and unevenness from the flow and return connections of the header.
- Install the flow pipe(s) between the header and the pump group.
- Install the return pipe(s) between the header and the pump group.

- Repeat the above steps to install all boilers.
- If required, seal off any unused connections of the main gas pipe and the header.
- Install the condensate drain pipe. Use the pre-assembled mounting brackets on the supports for this.
- When installing a cascade with an angled low loss header, install the set of bends between the header and the low loss header. Fit the enclosed flange seals in between. Use the corresponding screws.
  - 2½ " low loss header M12 x 50
  - 3" low loss header M16 x 55.
- Install the low loss header with the corresponding flange seals. Use the corresponding screws.
  - 2½ " low loss header M12 x 50
  - 3" low loss header M16 x 55.

CAUTION:

- Do not install the pump group cover until pressure has been supplied to the boiler system and the gas pipe.
- Check the cascade system for leaks.

5.2 INSTALLING THE INSULATION

CAUTION:

First start up the cascade system and test the system for leaks. Then install the insulation.

- Install the rear insulation over the header [1].
- When an angled low loss header has been installed, fit the insulation around the bends.
- Install the rear insulation part over the low loss header [2].
- If required, trim the insulation so that it is straight [3].

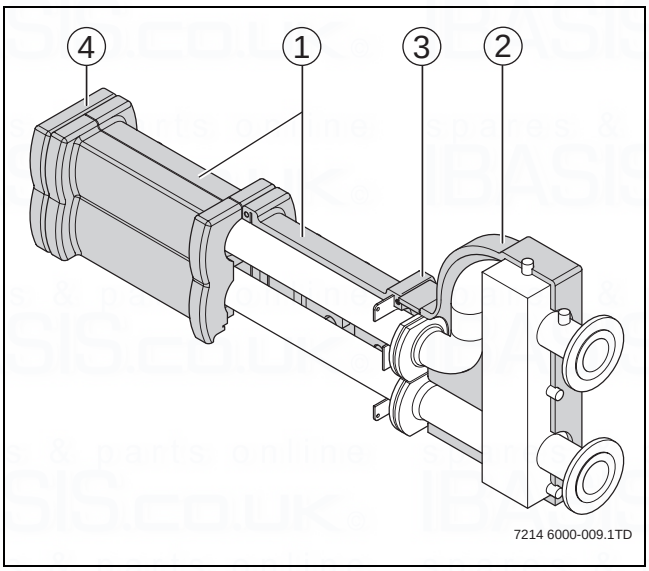

Fig. 9 Sammelleitung

- For 2½" and 3" low loss header: install the inserts in the outer insulation. For a 2½" low loss header: install the reducing inserts in the outer recesses [2]. For a 3" low loss header: install the reducing inserts in the inner groves [1].

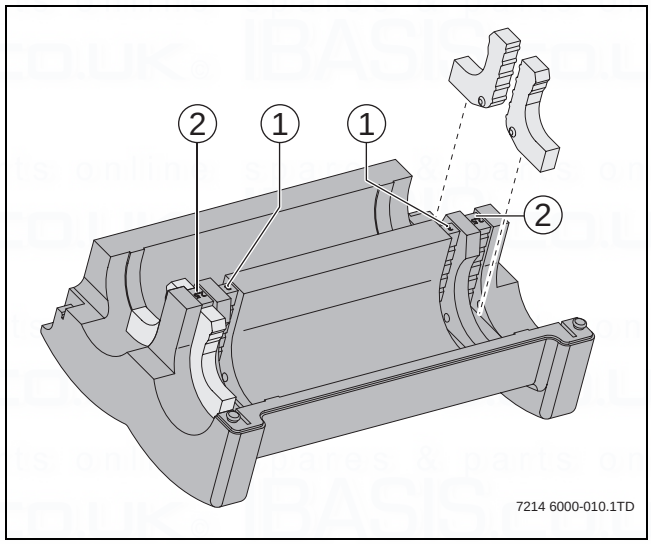

Fig. 10 Inner insulation

- Click the insulation together.
- Install the front insulation of the low loss header. If required, trim the insulation so that it is straight (→ fig. 9, [3]).
- Install the end cover over the header (→ fig. 9, [4]).

WORCESTER, BOSCH GROUP:

TECHNICAL SUPPORT:	0844 693 3028
APPOINTMENTS:	0844 892 3000
SPARES:	01905 752571
LITERATURE:	0844 892 9800
TRAINING:	01905 752526
SALES:	01905 752640

Worcester, Bosch Group
Cotswold Way, Warndon, Worcester WR4 9SW.
Tel. 0844 892 9900
Worcester, Bosch Group is a brand name of Bosch Thermotechnology Ltd.

worcester-bosch.co.uk

6 720 648 720

WORCESTER
Bosch Group