Installation and maintenance instructions

Logano plus SB315 and Logano plus SB315 VM Condensing boiler for pressure jet gas burners

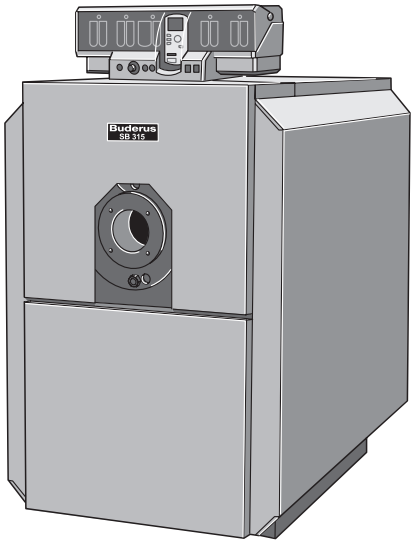

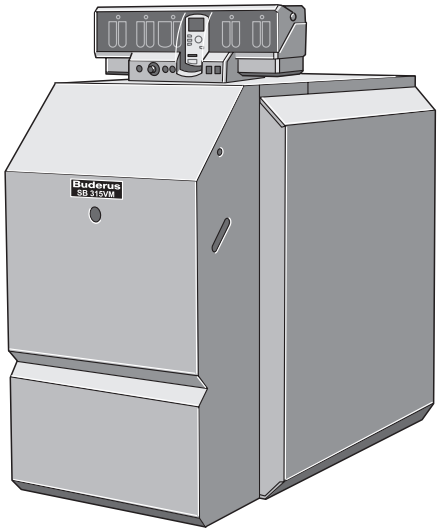

Buderus

Please read thoroughly prior to installation and maintenance.

EU Declaration of Conformity

The design and operation of this product conforms to European Directives and the supplementary national requirements. Its conformity has been demonstrated by the CE marking. You can view the Declaration of Conformity on the Internet at www.heiztechnik.buderus.de or request a copy from your local Buderus office.

Subject to technical modifications.

Constant development may lead to minor deviations of illustrations, functional steps and specifications from those described/shown.

Updating your documentation

Please let us know if you would like to make suggestions to improve our documentation or if you have noticed any errors.

Regulations and directives

Installation:

90/396/EEC	gas appliance directive
92/42/EEC	boiler efficiency directive
73/23/EEC	low voltage directive
89/336/EEC	EMC directive
97/23/EC	pressure equipment directive

current Gas safety (Installation and Use) Regulations
The Building Regulations
Building Standards (Scotland)
IEE Wiring Regulations BS 7671
National and ByLaws of the local water undertaking
Corgi registered required to work on the appliance (Competent Persons)
Oftec registered required to work on the appliance (Competent Persons)

Codes of practice:

BS 6880	Code of practice for low temperature hot water heating systems for output greater than 45kW
BS 6644	Specification for Installation of gas-fired hot water boilers of rated inputs between 70kW (net) and 1.8 MW (net) (2nd and 3rd family gases)
CP 342.2	centralised hot water supply
BS 5449	Forced circulation hot water systems
BS 5546	Installation of gas hot water supplies for domestic purpose (2nd. Family Gases)
BS 6891	Low pressure installation pipes
BS 5410	Code of practice for Oil firing Part 2
BS 5854 & IM/11	Codes of Pracitice for flues (as appropriate)
BS 7074	Application Selection & Installation of Expansion vessels & ancillary for sealed water systems Part 2
IGE/UP/1	Soundness testing & purging of industrial & commercial installations
IGE/UP/2	Gas installation pipework and compressors on industrial and commercial premises
IGE/UP/7	Gas installations in Timber framed buildings
IGE/UP/10	Installation of gas appliances in industrial and commercial premises, part 1: flued appliances

CISBE Guide
Management of Health and & Safety at work regulations 1992 - Guidance note PM5
Health & Safety at work act 1974
Manual Handling Regulations 1992

The Electricity at Work Regulations, 1989

Index

1 General 5

1.1 Application 5

1.2 Standards, regulations and guidelines 5

1.3 Flue gas systems 6

2 Standard delivery 7

3 Specification, dimensions, connections 8

4 Positioning 10

5 Installation 11

5.1 Thermal insulation and casing 11

5.2 Installation and electrical connection of the Logamatic 2000/4000 control units 16

5.3 Burner door for SB315 20

5.4 Burner installation 21

5.4.1 Burner – SB315 21

5.4.2 Burner – SB315 VM 21

5.5 Casing installation 22

5.5.1 Front panel installation – SB315 22

5.5.2 Burner hood installation – SB315 VM 23

5.6 Neutralisation system (optional accessory) 24

5.7 Condensate discharge 24

6 Initial start-up 25

7 Maintenance 26

7.1 General 26

7.2 Cleaning the boiler 26

7.3 Checklist 29

7.4 Maintenance on neutralisation device 30

1 General

1.1 Application

These installation and maintenance instructions contain important information regarding the safe and correct installation, commissioning and maintenance of the Logano plus SB315 and Logano plus SB315 VM, gas-fired condensing boilers.

These installation and maintenance instructions are designed for specialists, who, due to their vocational training and experience, are knowledgeable and experienced in handling heating systems and gas installations.

1.2 Standards, regulations and guidelines

Observe any standards and guidelines applicable to the installation and operation of this system plus any Building Regulations, as may apply in your country.

WARNING!

DANGER TO LIFE

through the explosion of volatile gases.

- The installation, the mains gas and flue gas connections, the initial start-up, the electrical connection as well as maintenance and repair work should only be carried out by a competent person, i.e. a registered installer.
- Ensure that work on parts of the gas installation are only carried out by registered installer.

WARNING!

DANGER TO LIFE

from risk of electric shock.

- Before work is undertaken on the heating equipment, isolate the system from the mains supply, e.g. by switching off the heating system emergency stop switch outside the boiler room.
- Switching off control units does not provide sufficient isolation.

The Buderus Logano plus SB315 steel boiler is designed as a gas-fired condensing boiler.

For boilers < 300 kW (rated output), a minimum pressure switch (accessory) may be installed instead of a low water indicator. If the connection on the boiler is not used this must be blanked off with a plug (not supplied).

USER NOTE

To prevent boiler contamination we strongly recommend the installation of a dirt trap into the boiler return.

Leak test

Carry out a leak test. The test pressure depends on the actual pressure in the heating system and should be 1.3 times that pressure, but at least 1 bar.

USER NOTE

Please note the details on the type plate.

Boiler operating conditions:

Permissible flow temperature:	
– Safety limit:	110 °C
– On request:	120 °C
Permissible operating pressure:	4 bar
Maximum time constant at the:	
High limit safety cut-out:	40 seconds
Control thermostat:	40 seconds

Fuel:

Logano plus SB315: LPG or natural gas.
Observe the instructions from the burner supplier.

Logano plus SB315 VM: Natural gas/LPG
Observe the instructions from the burner supplier.

Observe the separate documentation when converting to LPG.

1.3 Flue gas systems

WARNING!

DANGER TO LIFE

through toxic poisoning due to escaping flue gases.

- Route the flue gases via the flue pipe or the chimney into the open. Use only moisture-resistant flue pipes or chimneys with Building Regulation approval.
- The flue system must be installed in accordance with IGE/UP/10 and BS 6644.
- Check the flue gas connection for leaks.

2 Standard delivery

- 1 boiler packed on a pallet.
- 1 technical documents, fixed to the boiler body.
- 1 boiler casing with thermal insulation and accessory, packed in the carton.
- 1 front panel, packed in the carton.

USER NOTE

Subject to the type of boiler, some parts of the standard delivery may not be required.

Also required for installation not in boiler package:

- control unit
- burner
- safety equipement (valves, limit stats, ...)

3 Specification, dimensions, connections

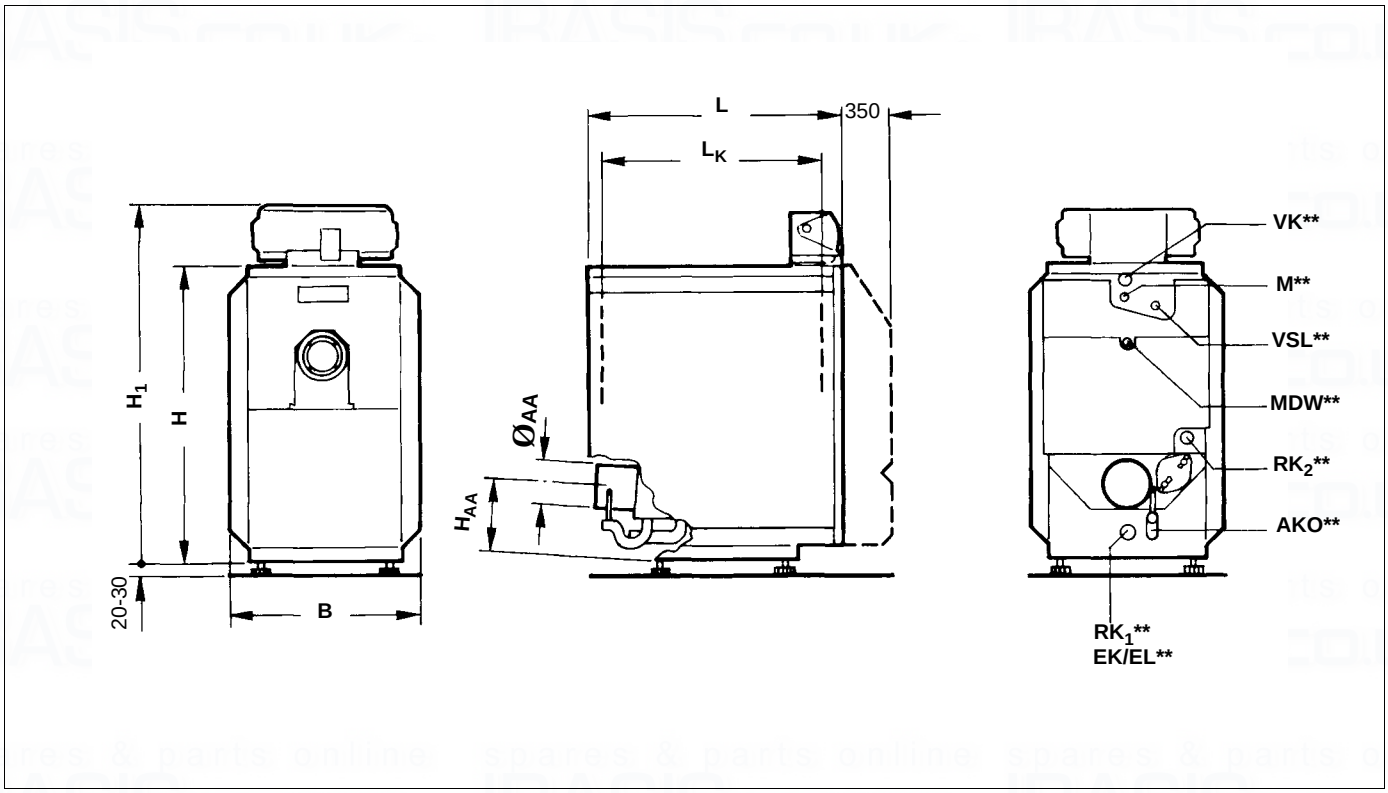

Fig. 1 Front, side and rear view *** See Tab. 2, page 9.*

Dimensions

Boiler size			50	70	90	115
Rated output		kW	50/45.7 1)	70/64 1)	90/82.3 1)	115/105.1 1)
Length	L	mm	1084	1084	1084	1084
Length	L_K	mm	930	930	930	930
Height	H	mm	1254	1254	1254	1254
Width	B	mm	820	820	820	820
Internal flue gas dia.	AA	mm	153	153	183	183
Height	H_{AA}	mm	347	347	317	317
Weight*		approx. kg	294	300	314	321
Height	H_1	mm	1483	1483	1483	1483

Tab. 1 Dimensions

1) 40/30 °C; 75/60 °C.

** Incl. burner +16 kg.*

Primary connections

Des-cription	NW	Connection points
VK	R1½	Boiler flow
M	-	Test point (sensor well)
VSL	R1	Safety flow
MDW	G¼	Opening for minimum pressure switch (MDW)
RK_1	R1½	1st boiler return (low temperature)
RK_2	R1¼	2nd boiler return (high temperature)
AKO	DA 21,3	Condensate outlet
EK/EL	R1½	Cold water drain*

Tab. 2 Connection points

** In UK not for filling boiler.*

*** Replacement for low water indicator.*

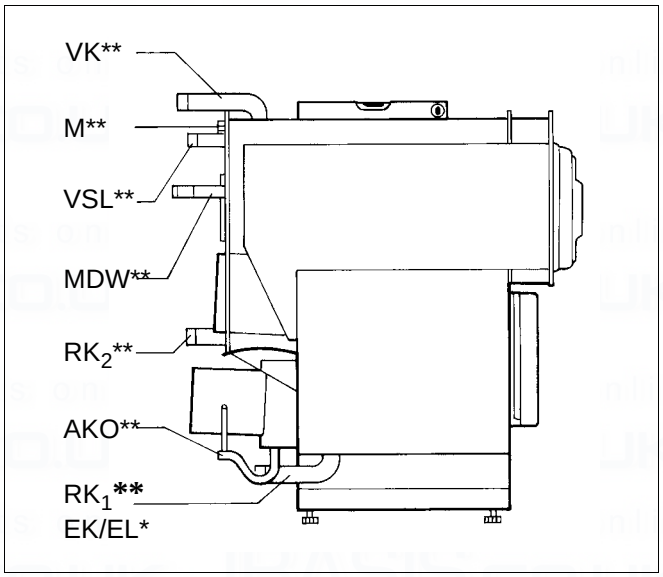

Fig. 2 Connections

4 Positioning

It is advantageous if a drain is in the vicinity of the boiler room.

Ideally, position the boiler on a plinth of approx. 5–10 cm height.

The floor must be flat and level.

When locating the boiler, observe the minimum wall clearances (values in brackets) required for installation and maintenance purposes (Fig. 3).

Level the boiler body horizontally.

Boiler size	Dimensions in mm	
	Length L	Width B_K
50-70	1084	680
90-115	1084	680

Tab. 3 Installation dimensions

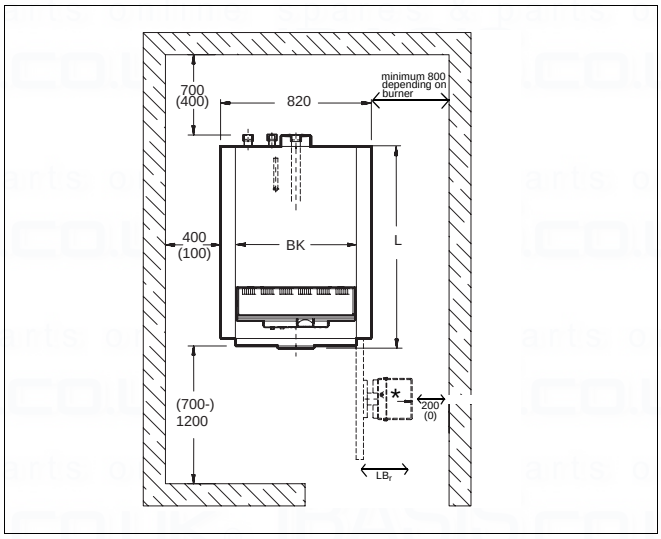

Fig. 3 Location (dimensions in mm, values in brackets () are minimum clearances)

* *For SB315 take the burner dimensions into consideration.*

** *See Tab. 2, page 9.*

5 Installation

USER NOTE

Except when fitting the front thermal insulation, the combustion chamber should be closed with the burner door or the sealing plate to prevent damage to the stainless steel combustion chamber from welding or grinding activities.

5.1 Thermal insulation and casing

USER NOTE

When fitting the thermal insulation, ensure that the textile web backing is arranged on the outside and the cut-outs at the rear (Fig. 4).

- Push the thermal insulation through underneath the boiler (Fig. 4).

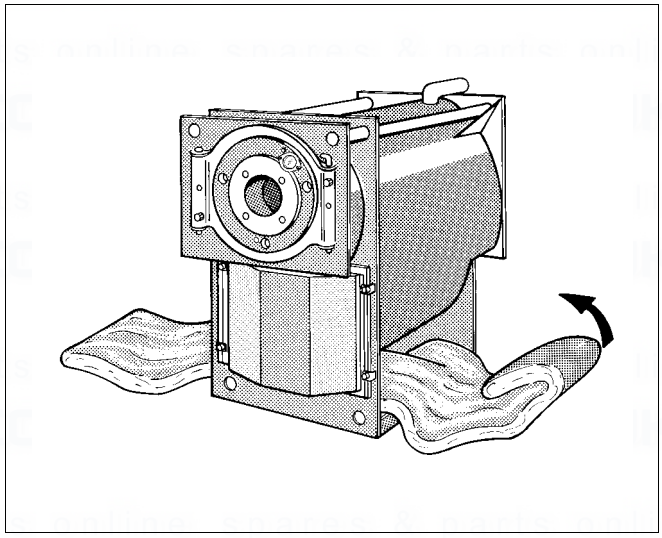

Fig. 4 Installing the thermal insulation

USER NOTE

To fit the upper front thermal insulation mat it is advisable to remove the burner door. See "Burner door for SB315", page 20.

- Overlap the thermal insulation mats around the boiler body and secure with four spring hooks (Fig. 5, **item 1**).

Fold the strip of the thermal insulation mat with outs at the rear, between the rear of the boiler and the flue gas collector.

- Hook the front panel thermal insulation with its slots (Fig. 5, **item 3**) into the hinge eyes.
- Locate the lower front panel thermal insulation (Fig. 5, **item 4**) and secure with four spring hooks on the surrounding thermal insulation.
- Locate the thermal insulation strip (Fig. 5, **item 2**) at the top around the boiler shell ring, and secure to the r.h. and l.h. side of the lower thermal insulation mat with two spring hooks respectively.
- Locate the upper front panel thermal insulation (Fig. 5, **item 3**) and secure with four spring hooks on the thermal insulation strip (Fig. 5, **item 2**).
- Re-fit the burner door (Fig. 21, page 20).
- Locate the rear thermal insulation (Fig. 6, **item 1**) in accordance with the recesses in the rear of the boiler and secure on the l.h. and r.h. side of the surrounding thermal insulation using two spring hooks each.

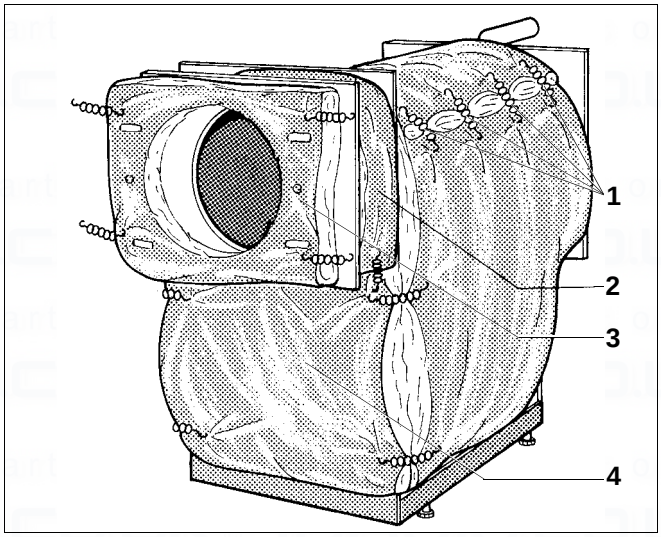

Fig. 5 Fit the thermal insulation

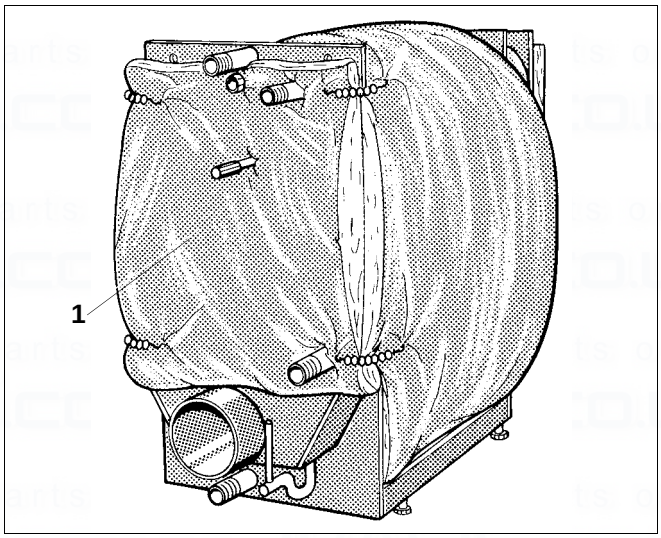

Fig. 6 Secure the rear thermal insulation

- Remove the support bracket nuts from the respective bolts.
- Locate the front support bracket (Fig. 7, **item 1**, cut-out facing down) with its two top holes on the threaded studs and secure with nuts.
- Locate the rear support bracket (Fig. 7, **item 2**, cut-out facing down) with its two top holes on the threaded studs and secure with nuts.

USER NOTE

Ensure that the angles of the support brackets point outwards. The front and rear support brackets must be horizontally level (Fig. 7).

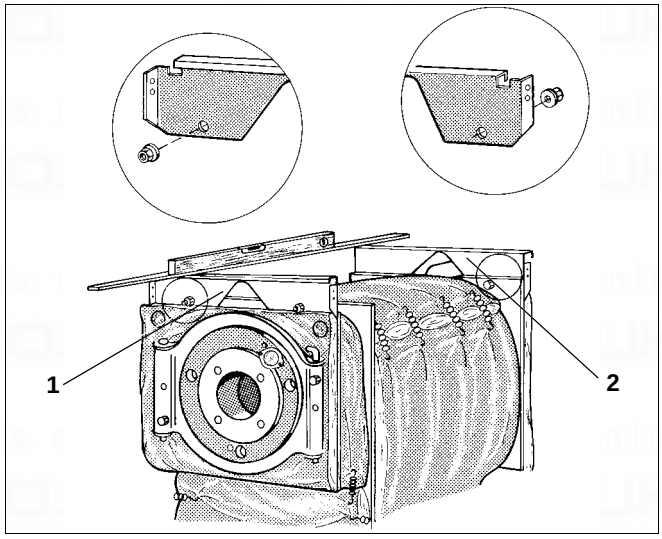

Fig. 7 Install the front and rear support brackets

- Hook the side rails (Fig. 8, **item 1**) with their hooks into the slots in the front and rear support brackets (Fig. 8, **item 2**), at the front into the holes and at the rear into the slots, then secure with two self-tapping screws each.

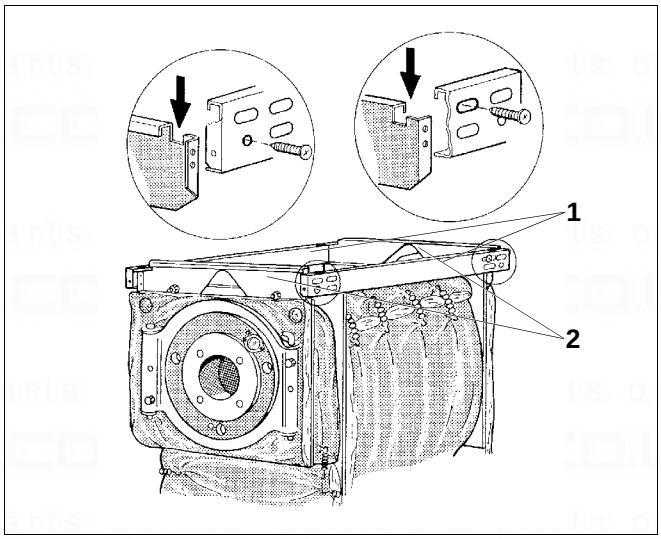

Fig. 8 Install the side rails

- Insert the side panels with their angles behind the boiler frame (Fig. 9).

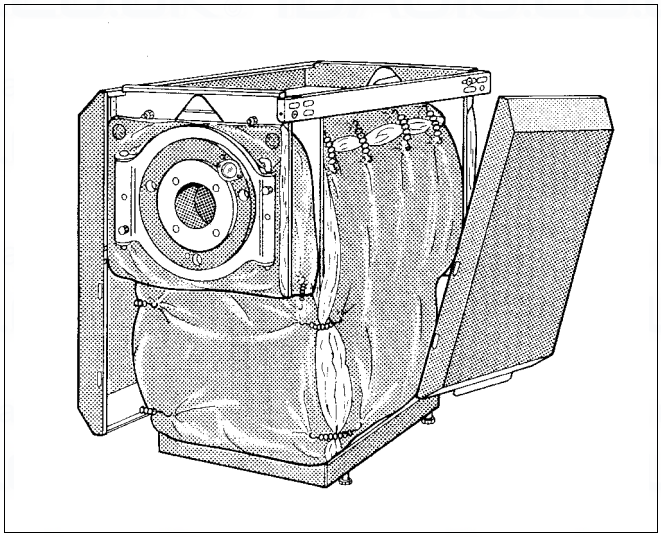

Fig. 9 Insert the side panels

- Lift the side panels (Fig. 10, **item 3**) and at the top hook their angle (Fig. 10, **item 1**) into the side rails (Fig. 10, **item 2**) and push down.
- Push the ends of the insulation mats behind the side panel angle (Fig. 10).
- Insert the burner cable (Fig. 10, **item 4**) strain relief with both pins into the holes of the l.h. or r.h. side panel angle.
- Trim the burner cable (Fig. 10, **item 5**) to a suitable length, insert it into the strain relief, close the tabs and secure the strain relief with two self-tapping screws.

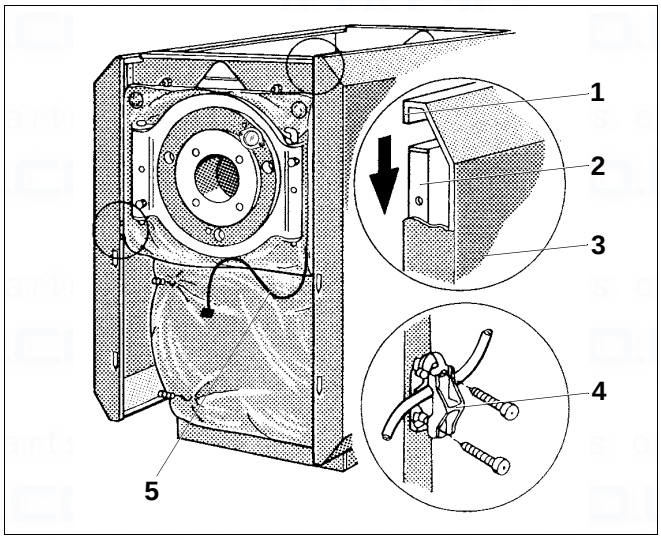

Fig. 10 Fit the strain relief

- Secure the rear panel section (Fig. 11, **item 1**) with five self-tapping screws on the side panel angle.
- Insert the upper rear panel section (Fig. 11, **item 2**) with the Z profile angle hooked behind the lower rear panel section (Fig. 11, **item 1**) on the side panel angle and secure with four self-tapping screws.

USER NOTE

Also turn the upper self-tapping screws into the support bracket.

- Secure one or two cable clips (Fig. 11, **item 3**) or a cable duct on the upper rear panel section (Fig. 11, **item 2**).

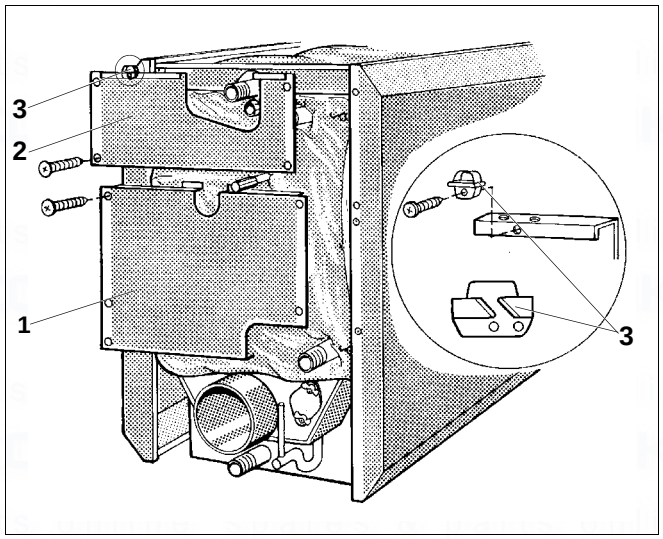

Fig. 11 Install the rear walls

Item 1: *Lower rear wall section*

Item 2: *Upper rear wall section*

Item 3: *Cable clip*

- Position the front boiler cover (Fig. 12, **item 1**) on top of the side panel angle and pull forward, until the l.h. and r.h. hooks lock into the slots (Fig. 12, arrow).
- Secure the front boiler cover (Fig. 12, **item 1**) by means of two self-tapping screws, which should be inserted through the boiler cover brackets and the side panel angle into the lateral tie-bars.

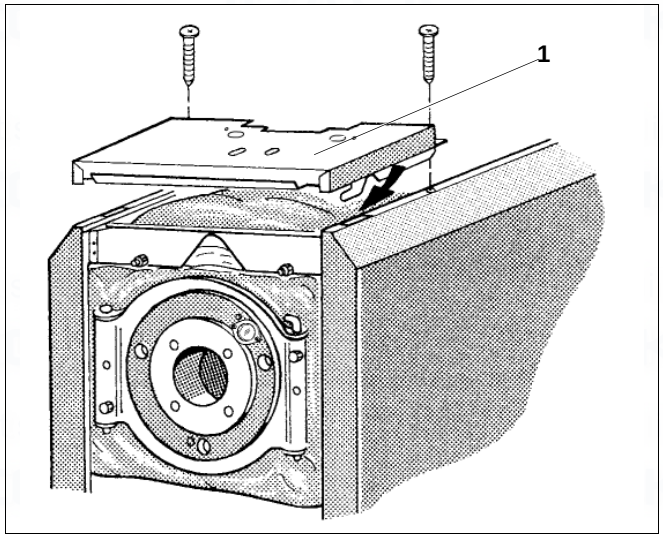

Fig. 12 Install the boiler front cover

5.2 Installation and electrical connection of the Logamatic 2000/4000 control units

- Unscrew both screws (Fig. 13, **item 1**) from the top of the terminal cover and remove the cover.
- Route the capillary tubes through the cable gland and unroll to the required length.
- Slightly tilt the control unit forward and set it down, so that the push-in hooks at the front lead into the oval holes. Push the control unit forward and tip down at the rear, until both flexible hooks engage on the r.h. and l.h. side (arrows Fig. 13).

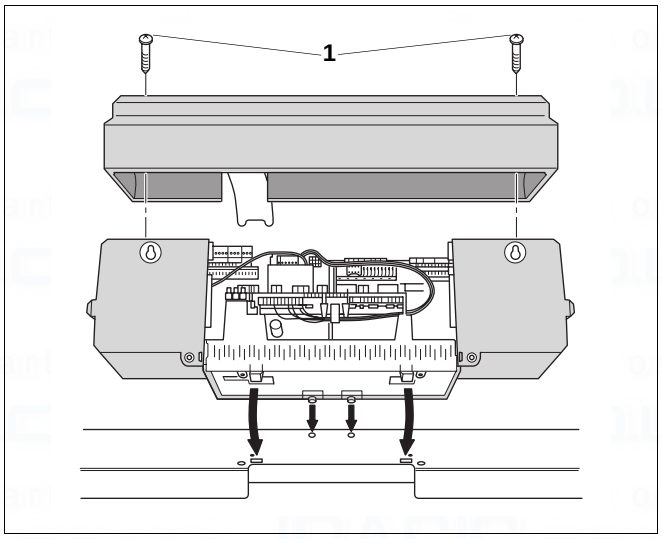

Fig. 13 Install the Logamatic 4000 control unit

- Secure the control unit on the front boiler cover using two screws at the l.h. and r.h. rear of the cable duct (Fig. 15, **item 3**).

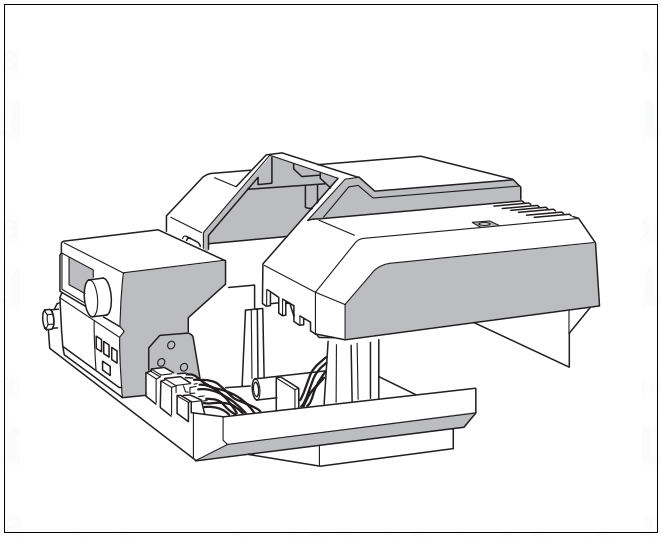

Fig. 14 Install the Logamatic 2000 control unit

USER NOTE

Logamatic 4000 control unit:
If necessary, you can break out or cut out the knockout (Fig. 15, **item 1**) in the rear panel section (Fig. 15, **item 2**).

Only Logamatic 4000 control unit:

- Insert both lower hooks (Fig. 15, **item 6**) on the r.h. and l.h. side of the rear panel (Fig. 15, **item 2**) into the clip frame (Fig. 15, **item 4**), keeping the slot in the upper edge.
- Push both upper push-in hooks (Fig. 15, **item 5**) slightly inwards (see arrow) and insert the rear panel (Fig. 15, **item 2**) so that both hooks lock into place.
- Locate the terminal cover and secure with two self-tapping screws (Fig. 13 & Fig. 14).

INSTRUCTIONS

Make the electrical connections in accordance with the enclosed wiring diagram.

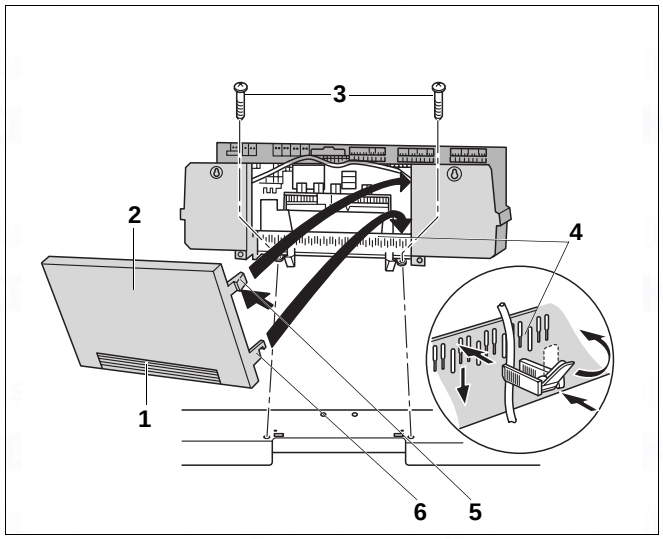

Fig. 15 Remove the rear panel

Item 1: *Knock-out*

Item 2: *Rear panel component*

Item 3: *Screws*

Item 4: *Clip frame*

Item 5: *Upper resilient push-in hook*

Item 6: *Lower hook*

- Secure all cables with cable clips:

– Insert the cable clip with inserted cable from above into the clip frame slots (Fig. 16, **item 1**); the lever must point upwards (Fig. 16, step **1**).

– Push the cable clip down (Fig. 16, step **2**).

– Push against the clip (Fig. 16, step **3**).

– Toggle the lever up (Fig. 16, step **4**).

USER NOTE

Pay particular attention to proper cable and capillary pipe routing.
Create a permanent mains power connection in accordance with **EN 50 165**. Observe all local regulations.

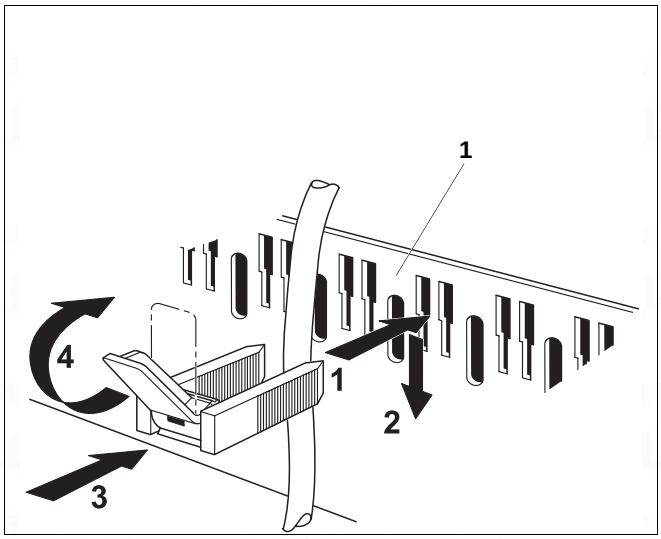

Fig. 16 Secure the cable with a cable clips

- Unroll the capillary pipes of the temperature sensor (Fig. 17, **item 1**) as required and route to the test point.

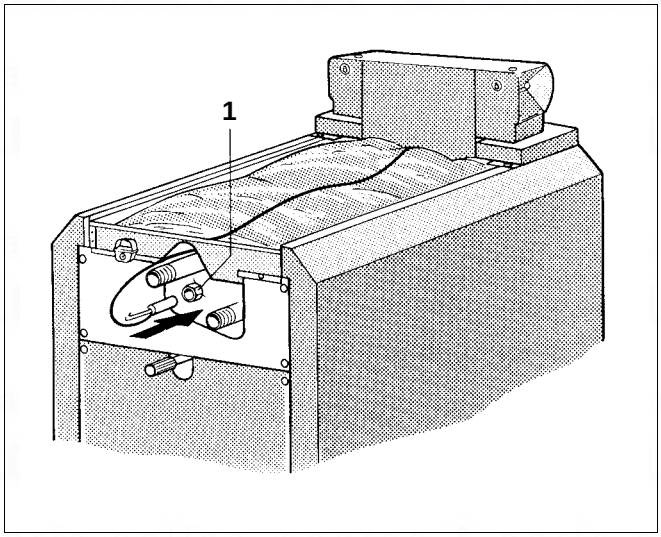

Fig. 17 Test point

- Insert the temperature sensor until it bottoms out inside the sensor well (Fig. 18, **item 1**). The plastic coil (Fig. 18, **item 2**) then automatically pushes back. At the same time insert the compensating spring (Fig. 18, **item 3**) into the sensor well (Fig. 18, **item 1**).
- Press the sensor holder (Fig. 18, **item 4**) (standard delivery – control unit) laterally or from above, onto the sensor well head (see arrows).

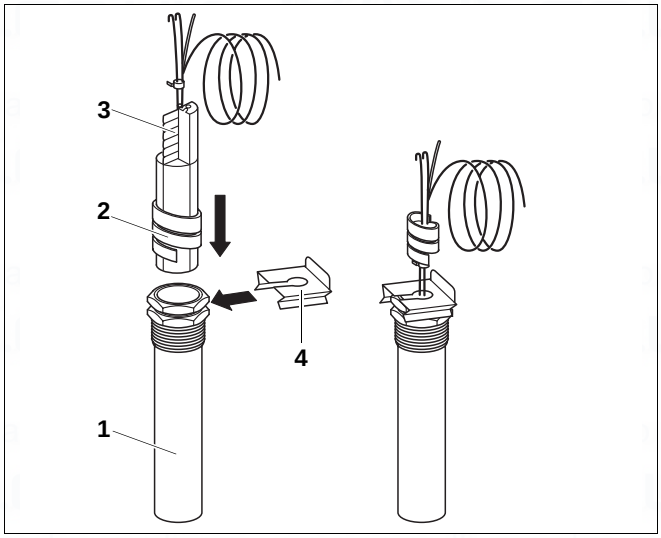

Fig. 18 Sensor well and temperature sensor

Only Logamatic 2000 control unit

- Pivot the display unit into the required position (Fig. 19).

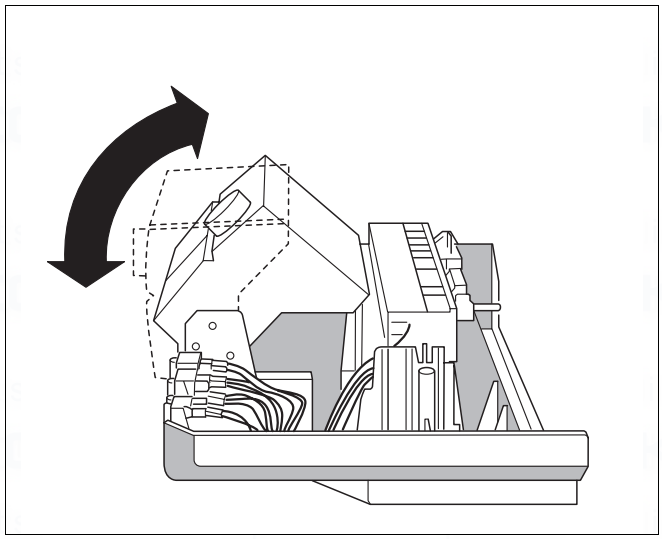

Fig. 19 Pivot the display unit into place

- Fit the cover and install the control unit (Fig. 20).

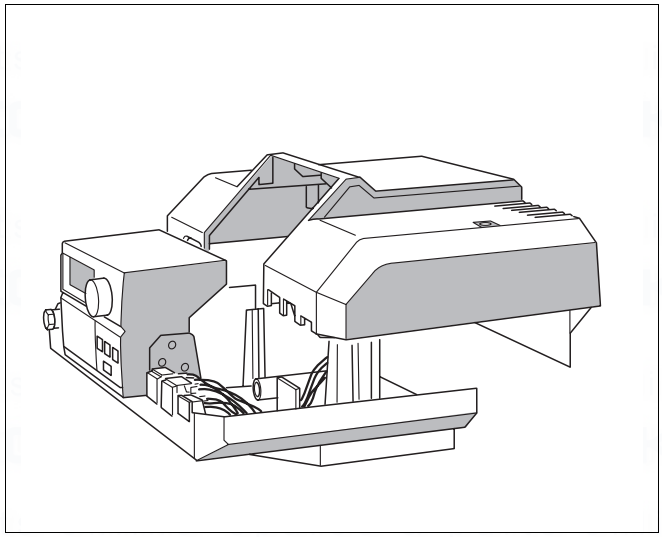

Fig. 20 Install the 2000 control unit

5.3 Burner door for SB315

USER NOTE

On Unit versions, the burner is already fitted to the burner door.
Install the burner in accordance with the burner manufacturer's instructions.
You can change the burner door to close to the l.h. or the r.h. side.
For SB315 VM observe the installation, commissioning and maintenance instructions for the Logatop VM gas pre-mix burner.

- Open the burner door and remove the hinge pins (Fig. 21, **item 2**).
- Change the dowel pin (Fig. 21, **item 3**) in the bottom of the burner door from the r.h. to the l.h. side.
- Hook the burner door with the dowel pin (Fig. 21, **item 3**) in the bottom hinge eye and secure with the hinge pins (Fig. 21, **item 2**) in the upper hinge eye.
- Close the burner door and secure with hexagon bolts (Fig. 21, **item 1**). Torque to 10 Nm; max. 15 Nm.

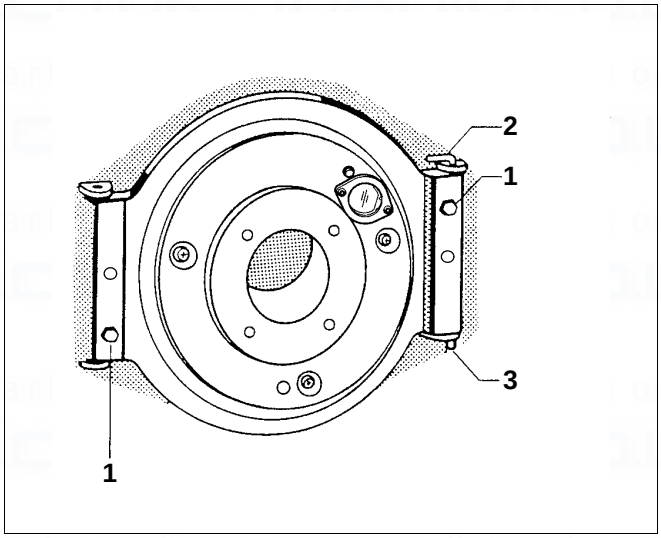

Fig. 21 Burner door

Item 1: *Hexagon bolts*

Item 2: *Hinge pin*

Item 3: *Dowel pin*

5.4 Burner installation

5.4.1 Burner – SB315

USER NOTE

Remember that for model SB315 the burner should be mounted to the burner door. Observe the installation instructions provided by the burner manufacturer.

- Observe the door depth T (Fig. 22; see also Tab. 4).
- Seal the space between the blast tube and the thermal insulation.

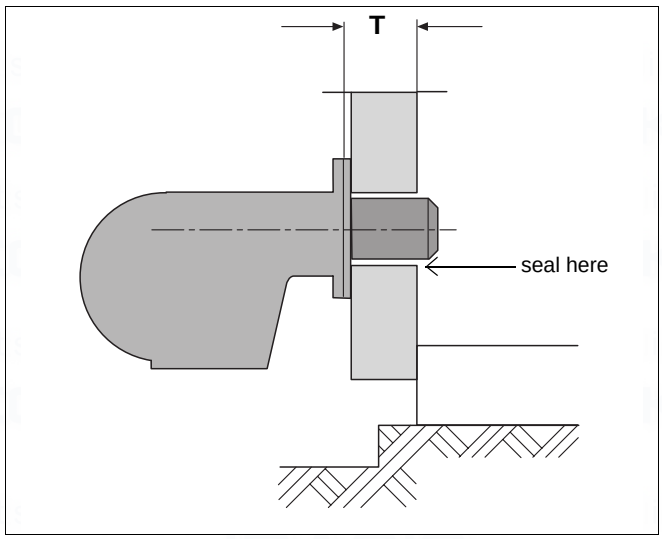

Fig. 22 Schematic diagram of the door depth T

5.4.2 Burner – SB315 VM

- Remove the sealing plate from the combustion chamber.

CAUTION!

BURNER DAMAGE

on the SB315 VM through shock and impact.

- Protect the Buderus gas pre-mix burner at all times against shock and impact.

- Secure the burner door with two hexagon bolts (Fig. 23, **item 1**) (torque approx. 10; max. 15 Nm).

USER NOTE

You may route the gas supply pipe to the burner through the r.h. and l.h. holes at the bottom of the front boiler panel and the rear boiler panel, see Fig. 24, page 22.

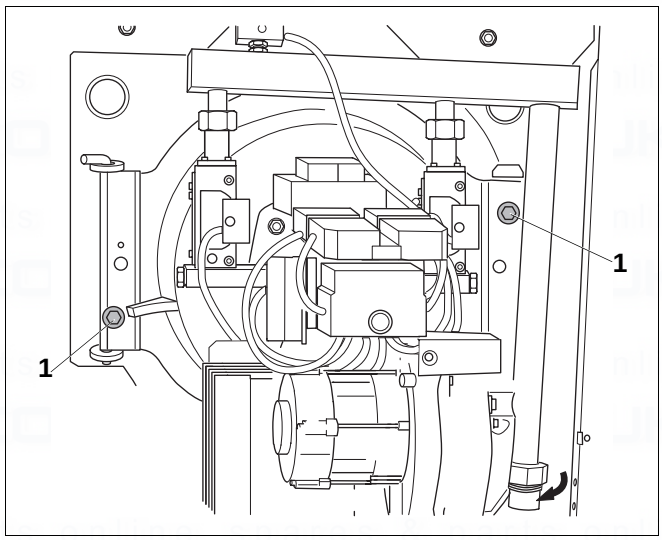

Fig. 23 Burner door SB315 VM with installed pre-mix burner

Boiler size [kW]	T [mm]
50	95
70	
90	70
115	

Tab. 4 Door depth

5.5 Casing installation

- Loosely locate the rear boiler cover sections in accordance with Fig. 24 on the r.h. and l.h. side panel.

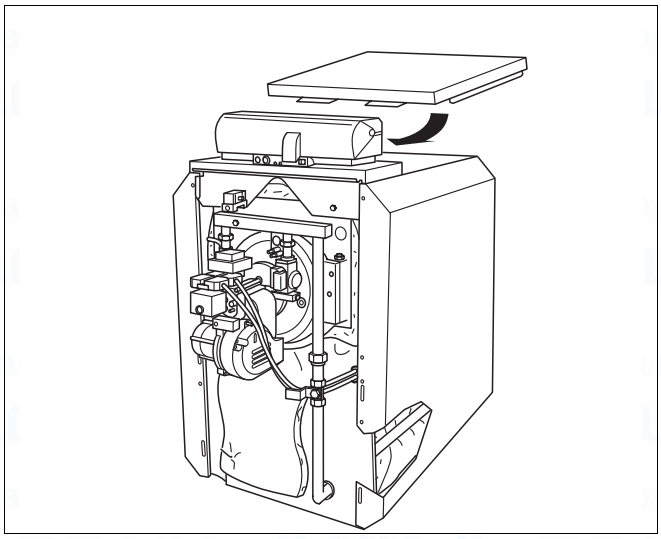

Fig. 24 Install the boiler casing

5.5.1 Front panel installation – SB315

- Hook the lower front panel (Fig. 25, **item 1**) with four offset hooks into the slots of the side panel angle.
- Hook the offset tabs of the top front panel (Fig. 25, **item 2**) into the slots of the lower front wall angle and at the top into the angle of the front boiler cover.
- Affix the typeplate to the front panel.

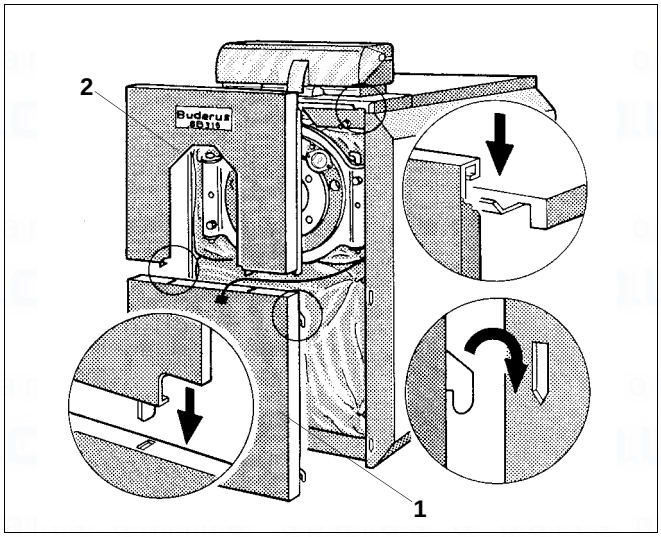

Fig. 25 Install the front panel SB315

5.5.2 Burner hood installation – SB315 VM

- Insert the angled snap nuts on the l.h. and r.h. side into the cut-out provided in the side panel angle (Fig. 26).
- Hook the burner hood into the angle of the front boiler cover (Fig. 26).
- Insert the locking bolts on the r.h. and l.h. side through the burner hood into the angled fixing (Fig. 26).
- Affix the typeplate to the burner hood.

Position the data plate according to boiler location on top of the r.h. or the l.h. side panel (Fig. 26).

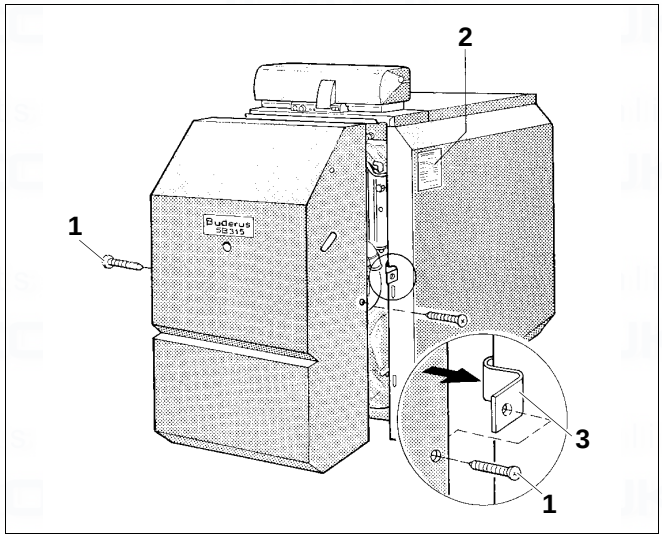

Fig. 26 Install the burner hood SB315 VM

Item 1: *Locking screws*

Item 2: *Typeplate*

Item 3: *Angled fixing*

5.6 Neutralisation system (optional accessory)

Observe the separate installation instructions for the installation and maintenance of the neutralisation system* (part of the standard delivery of the neutralisation system*).

- Connect the drain hose with a hose clip to the condensate drain (siphon, Fig. 27, **item 1**).

USER NOTE

Observe that, generally, the condensate should be drained via the flue pipe into the boiler. Where this is impracticable, use only stainless steel or plastic tee pieces in the separate feed hose pipe. Ensure that a sludge trap is fitted, if ceramic flue gas systems are installed.

**Accessory to order.*

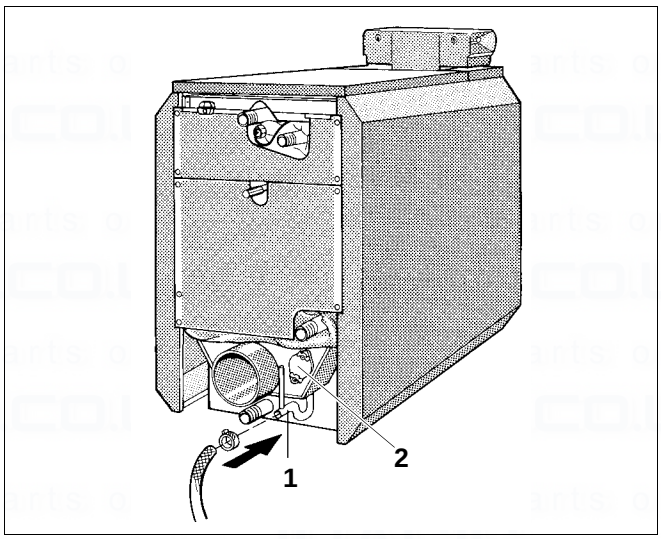

Fig. 27 Fit the drain hose

Item 1: *Siphon and condensate outlet*

Item 2: *Clean-out cover*

5.7 Condensate discharge

Discharge the condensate via a tundish directly into a drain. Only use plastic pipe as the condensate is acidic (pH2 to 5). A diameter of minimum 32mm is recommended and the pipe must run away from the boiler with a fall of 30mm in every metre. Protect the condensate drain from frezzing by insulating the pipe in non frost protected areas. Please fill the siphon with clean water before firing the boiler.

6 Initial start-up

WARNING

DANGER TO LIFE

through escaping flue gases.

- Pour approx. 10 litres of water into the cleaning aperture or into the combustion chamber before the initial start-up of the boiler (or the neutralisation system, to fill the neutralisation tank if used) to prevent flue gases escaping.

CAUTION!

BOILER DAMAGE

through corrosion and sludge.

- You should flush the heating system thoroughly before the system is filled. Check the fill and make-up water quality, to prevent the formation of scale, sludge and corrosion (observe the separate guide "Water treatment").

Buderus

USER NOTE

Observe the installation instructions of the neutralisation system if used.
Carry out the initial start-up in accordance with the operating instructions of the boiler, the burner, the minimum pressure switch and the electronic heating circuit control unit.
Familiarise the user with all functions and the operation of the system during the hand over and give them all the relevant technical documentation.
Instruct the user regarding all special maintenance aspects.
Recommend they arrange a maintenance contract.

7 Maintenance

7.1 General

WARNING!

DANGER TO LIFE

through inadequate maintenance.

- Ensure that maintenance work on parts of the gas installation is only carried out by registered gas fitters.

USER NOTE

The user is responsible for arranging the cleaning and maintenance of the heating system.
Arrange the maintenance and inspection of the entire heating system incl. the neutralisation system (if fitted) on an annual basis.

USER NOTE

Confirm the maintenance work carried out in the checklist.
Observe the burner manufacturer's maintenance instructions regarding the burner maintenance.

7.2 Cleaning the boiler

WARNING!

DANGER TO LIFE

from risk of electric shock.

- Before work is undertaken on the heating equipment, isolate the system from the mains supply, e.g. by switching off the heating system emergency stop switch outside the boiler room.
- Switching off control units does not provide sufficient isolation.

CAUTION!

BOILER DAMAGE

through incorrect cleaning apparatus

- Only use Buderus cleaning brushes for manually cleaning the boiler.

USER NOTE

We recommend you use high pressure cleaning equipment for wet cleaning the boiler.
Cleaning residues must not be introduced into the neutralisation system.
The condensate outlet must not be blocked during cleaning (see Fig. 27, page 24).

- Checking and possibly cleaning the flue gas collector and the condensate outlet through the cleaning aperture Fig. 27, page 24.
- Remove the upper (Fig. 28, **item 2**) and the lower front panel (Fig. 28, **item 1**).
- If fitted, unscrew the locking bolts from the burner hood and remove the hood, see Fig. 26, page 23.
- Remove the thermal insulation mat (Fig. 28, **item 3**).

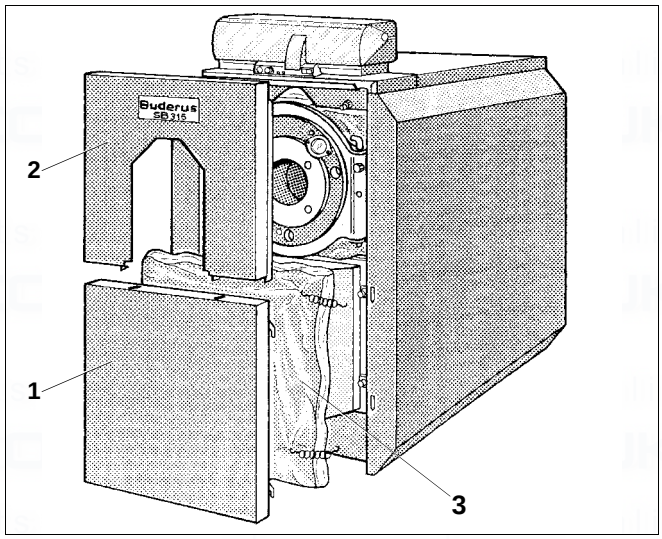

Fig. 28 Cleaning the SB315

- Remove the nuts from the L bracket, pivot the L bracket out of the way and remove the lower boiler door (Fig. 29).
- Remove the hexagon bolts from the upper boiler door and open the door, see Fig. 23, page 21.

CAUTION!

BURNER DAMAGE

on the SB315 VM through shock and impact.

- Protect the Buderus gas pre-mix burner at all times against shock and impact.

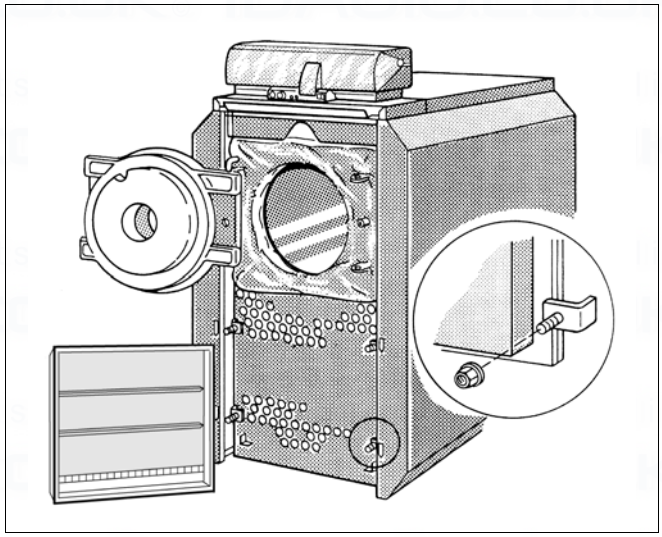

Fig. 29 Checking/inspection

- Pivot the upper burner door with the burner to the side, see Fig. 23, page 21.
- Clean the combustion chamber and the heating surfaces.
- Brush out the secondary heating pipes (Fig. 30).

Buderus

USER NOTE

When cleaning the secondary heating pipes, ensure that the entire brush head protrudes from the rear of the pipe, before the cleaning brush is withdrawn again.

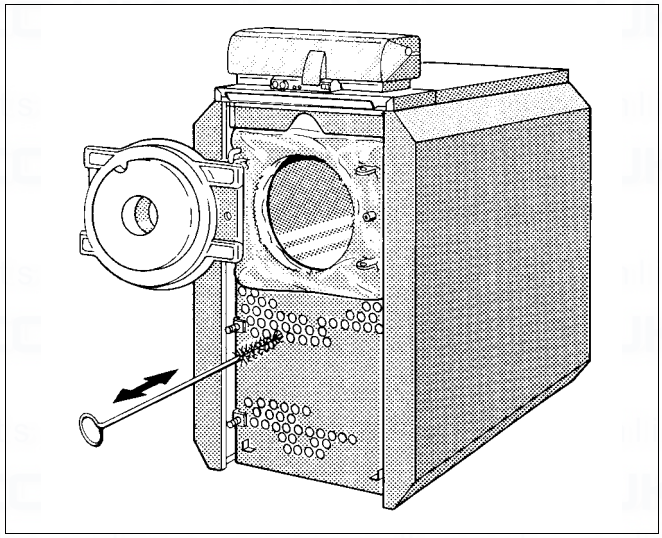

Fig. 30 Brush cleaning

- Remove any cleaning residues with a vacuum cleaner.
- Check the gaskets on the boiler door and the reversing door and replace, if necessary.

USER NOTE

When using spray equipment, observe the operating instructions of the cleaning device.
Ensure that spray does not enter into the control unit.

- Close and bolt down the boiler door.
- Close and tightly seal the lower boiler door with the L bracket (Fig. 29, observe the installation position).
- Secure the lower thermal insulation mat with spring hooks.
- Install the lower and upper boiler front panels (Fig. 28).
- Hook the burner hood into place and secure with locking bolts, see Fig. 26, page 23.
- Start up the system.

7.3 Checklist

Mark all maintenance work to be carried out with an "X" in the corresponding column; confirm work done this in the field of the allocated number with date and signature.

Carry out maintenance on the burner and the boiler in accordance with the appropriate maintenance instructions.

Heating system		01	02	03	04	05	06	07	08
1	Disconnect your heating system from the mains electricity supply.								
2	Close the gas shut-off valve.								
3	Disconnect the gas supply pipe from the burner.								
4	Remove the front casing sections and open the burner door (Fig. 29, page 27)								
5	Remove the reversing door (Fig. 29, page 27)								
6	Unscrew the neutralisation drain hose (condensate outlet) (Fig. 27, page 24)								
7	Check/clean the combustion chamber.								
8	Check/clean the secondary heating surfaces.								
9	Flush the condensate outlet (siphon) (Fig. 27, page 24)								
10	Check/clean the flue gas collector.								
11	Check/replace the boiler door gasket.								
12	Check/replace the lower boiler door silicone gasket								
13	Reconnect the condensate outlet								
14	Close and bolt down the lower boiler door; fit the casing sections								
15	Pour water (approx. 10 litres) through the combustion chamber into the heat exchanger								
16	Close and bolt down the burner door								
17	Reconnect the gas supply pipe to the burner.								
18	Checking gas components for leaks								
19	Check flue pipe for leaks.								
20	Check the function of all safety equipment.								
21	Check the function of the control unit.								
22	Start up the heating system in accordance with the operating instructions.								
23									
24									
Observe the separate instructions for the maintenance of the neutralisation system (part of the standard delivery of the neutralisation system).									

Installer Date: **01**	Installer Date: **02**	Installer Date: **03**	Installer Date: **04**
Installer Date: **05**	Installer Date: **06**	Installer Date: **07**	Installer Date: **08**

7.4 Maintenance on neutralisation device

When carrying out maintenance on the neutralisation device, use the following checklist.

	Maintenance on neutralisation device	Comments
1.	Shut down the neutralisation device	
2.	Loosen inlet and drain hose on granulate container	
3.	Remove container cover from neutralisation device	
4.	Remove old granulate (container can be upended through 180 °), clean container (dispose of granulate along with domestic waste)	
5.	Fill with new granulate (see documentation on neutralisation device; observe the granulate manufacturer's instructions)	
6.	Put neutralisation device container cover back in place and screw shut (if applicable)	
7.	Plug in electrical connection cable (if available) on the neutralisation device	
8.	Make hose connections and check for leaks	
9.	Bring the neutralisation device into service	
	Confirm proper maintenance with signature, date and company stamp	

Notes

spares & parts online IBASIS.CO.UK

Your installer:

Buderus

Buderus
Cotswold Way, Warndon, Worcester WR4 9SW
Tel.: 01905 752794, Fax: 01905 753130
www.buderus-commercial.co.uk

In the UK, Buderus is a trading name of
BBT Thermotechnology Ltd.

BBT Thermotechnik GmbH
D-35573 Wetzlar
www.heiztechnik.buderus.de
info@heiztechnik.buderus.de

spares & parts online IBASIS.CO.UK