Installation and maintenance instructions

Gas fired condensing boiler

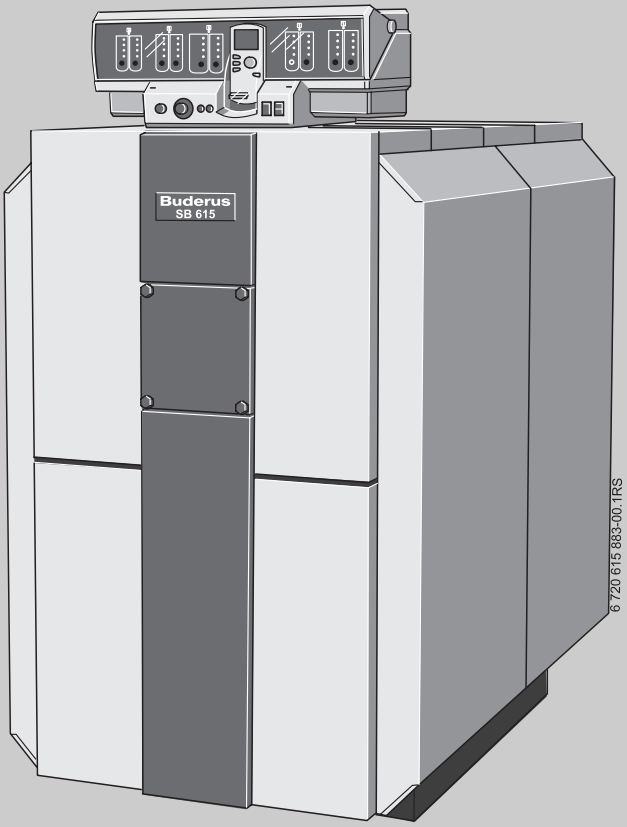

Note:
This boiler must only be operated with natural gas or liquid propane (LP)!

Logano plus SB615 Gas

For contractors

Read carefully prior to installation and maintenance.

6 720 640 266 - 08/2009 GB/IE

Buderus

spares & parts online IBASIS.CO.UK

Contents

1 Explanation of symbols and safety instructions . . 3
1.1 Symbols 3
1.2 Safety information 3

2 Information about the appliance 5
2.1 EU Declaration of Conformity 5
2.2 Correct use 5
2.3 Data plate 5
2.4 Standard delivery 5
2.5 Tools, materials and auxiliary equipment 5
2.6 Specifications, dimensions, connections 6

3 Regulations, standards and guidelines 9
3.1 Low water indicator installation 9
3.2 Standards and guidelines/directives 9
3.3 Leaks 10
3.4 Safety limits 10
3.5 Boiler positioning 11
3.5.1 Foundation and recommended wall clearances 11
3.5.2 Levelling the boiler 12
3.6 Disposal 12

4 Transporting the boiler 13
4.1 Means of transport 13
4.1.1 Transporting the boiler using a forklift truck 13
4.1.2 Transporting the boiler using two pallet trucks . 13

5 Installation of the boiler 14
5.1 Checking delivery for completeness 14
5.2 Disposing of packaging 14
5.3 Minimum clearances / product dimensions 14
5.4 Changing the hinging of the burner door 14
5.5 Installing the minimum pressure switch and minimum pressure limiter 15
5.6 Low water indicator (accesory), fitting (400 – 600kW) 15
5.7 Connecting the boiler to the pipework 16
5.7.1 Connecting the return to the boiler 16
5.7.2 Connecting the flow to the boiler 16
5.7.3 Connecting the safety line flow 16
5.8 Filling the heating system and checking connections for leaks 17
5.9 Fitting the lagging 18
5.10 Fitting the connection plates 19
5.11 Fitting the side panels 20
5.12 Routing the burner cable 21
5.13 Fitting the back plate 22
5.14 Fitting the front boiler cover 23
5.15 Fit and connect the control unit (accessory) . . . 23
5.16 Installing the temperature sensor set 25
5.17 Fitting the boiler cover sections 26
5.18 Fitting the front panel 27
5.19 Securing the shield, device label and data plate 28
5.20 Connecting and filling the neutraliser (accesory) 28
5.21 Installing condensate pipework 29
5.22 Connecting the flue side of the heating system 30
5.22.1 General information on flue systems 30
5.22.2 Fitting the flue pipe sealing collar (accessory) . 30
5.22.3 Fitting the flue temperature sensor (accessory) 30
5.23 Fitting burner (accessory) and connecting gas supply 31
5.23.1 Fitting the burner plate 31
5.23.2 Fitting the burner to the burner plate 32
5.23.3 Connecting the gas supply 33

6 Initial operation 34
6.1 Flushing the heating system 34
6.2 Filling the heating system 35
6.3 Preparing the heating system for operation . . . 36
6.4 Commissioning the control unit and the burner 36
6.5 Commissioning report 37

7 Shutdown 38
7.1 Shutting down the heating system 38
7.2 Shutting down the heating system in an emergency 38

8 Inspection/maintenance 39
8.1 General notes 39
8.2 Preparing the boiler for inspection and maintenance 39
8.3 Cleaning the boiler 40
8.4 Cleaning the flue gas collector 42
8.5 Checking the heating system water pressure . . 43
8.6 Inspection and maintenance reports 44

1 Explanation of symbols and safety instructions

1.1 Symbols

Safety information in the text is framed and marked with a warning triangle on a grey background.

Signal words indicate the hazard risk level resulting from not following the instructions.

- **Caution** indicates that minor damage to property could result.
- **Warning** indicates that minor personal injury or serious material losses could result.
- **Danger** indicates that serious personal injury could result. In particularly serious cases, lives could be at risk.

Notes are identified by the symbol shown on the left. They are bordered by horizontal lines above and below the text.

Notes contain important information in cases where there is no risk of personal injury or material losses.

1.2 Safety information

These installation and maintenance instructions contain important information for the safe and appropriate installation, commissioning and servicing of the Logano plus SB615 Gas condensing boiler.

These installation and maintenance instructions are designed for specialists, who, – through their vocational training and experience, – are knowledgeable in handling heating systems and gas installations.

Observe all standards and guidelines applicable to the installation and operation of this system in your country.

Only use original Buderus spare parts. Losses caused by the use of parts not supplied by Buderus are excluded from the Buderus warranty.

Risk to life from gas explosion

There is a risk of explosion if you can smell gas!

- ▶ No open flames. Do not smoke. Do not use lighters.
- ▶ Prevent sparks. Do not operate electrical switches, including telephones, plugs, door-bells, mobiles or other electrical devices.
- ▶ Close the main gas shut-off valve.
- ▶ Open windows and doors.
- ▶ Warn all occupants of the building, but do not ring doorbells.
- ▶ Do call your gas supplier from outside the building.
- ▶ If you hear gas escaping, immediately leave the building, prevent others from entering and notify the police and fire brigade from outside the building.

Customer information:

- ▶ Only qualified personnel may carry out the installation, the main fuel and flue gas connections, the initial start-up, electrical connections and any maintenance or repair work.
- ▶ Work on gas-carrying equipment is to be carried out by a licensed company.

Risk to life from poisoning

An insufficient supply of air can result in the escape of dangerour flue gases!

- ▶ Prevent air inlet and outlet vents from becoming blocked or restricted.
- ▶ Do not operate the boiler until any ventilation defects have been rectified.
- ▶ Inform the system user in writing of the fault and its associated dangers.

Risk of injury from electric shock

- Isolate the heating system from the mains electricity supply before starting work. Use either an emergency isolation switch or the relevant circuit breaker.
  A contact separation of at least 3mm must be achieved across EACH pole.
- Prevent unintentional reconnection of the electricty supply.

Risk of fire from flammable materials or liquids

- Never store flammable materials or liquids in the immediate vicinity of the boiler.

Laws and regulations

- The appliance must be installed in accordance with and comply to, the current: Statutory Instrument Laws, Gas Safety Regulations, IEE Regulations, Building Regulations, Local Water By-Laws, Health & Safety document 635 (The Electricity at Work Regulations) and any other local requirements. Observe all European and local installation standards, building regulations and the latest edition of the wiring regulations. Chemically aggressive substances, can corrode the appliance and invalidate any warranty.

Preventative maintenance

- Carry out annual maintenance and cleaning procedures. In the course of this work, check the entire heating system (including neutralisation device) for correct function.
- Have faults corrected as quickly as possible in order to prevent system damage and to help protect your heating system.

Frost protection

The heating system may freeze in cold weather if the control unit is not turned on.

- Protect your heating system against frost when temperatures below zero are expected. If for some reason the control unit is to be switched off, drain the system water from the boiler, DHW cylinder and all heating system pipework.

System damage and personal injury due to operator errors

Operator errors can result in injury and damage to property.

- Ensure that children never operate this appliance unsupervised or play with it.
- Ensure that only personnel who can operate this appliance correctly have access to it.

Instructing the customer

- Hand these installation and maintenance instructions to your customer when handing over the system. Request that these instructions are kept in a safe location next to the boiler.
- Explain to the customer how the appliance works and how to operate it.

2 Information about the appliance

2.1 EU Declaration of Conformity

The design and operation of this product conform to European Directives and the supplementary national requirements. Its conformity is demonstrated by the CE designation.

You can view the Declaration of Conformity on the internet at www.buderus.de/konfo or request a copy from your local Buderus sales office.

2.2 Correct use

The Logano plus SB615 Gas condensing boiler has been designed for wet heating systems in e.g. multiple dwelling units or in industrial applications. Any gas burner type-tested to EN 676 can be used if its operating range matches the boiler specifications.

2.3 Data plate

The information on the type plate is binding and must be observed!

2.4 Standard delivery

- ▶ Upon delivery, check all packaging for damage.
- ▶ Check the delivered package(s) for completeness.

- Boiler mounted on pallet
- Connection pipe for low water indicator, connected to the boiler body (for boiler size ≥ 400 kW)
- Technical documents, attached to boiler block
- Siphon in the combustion chamber
- Boiler casing with thermal insulation and accessory bag, packed in the wooden crate
- Control unit with wiring diagram and operating instructions for electronic boiler and heating circuit control, packed in carton (accessories ordered separately).
- Neutralisation device, packed in individual carton (accessory ordered separately)

It is possible that some of the standard accessories will not be necessary for certain boiler types.

2.5 Tools, materials and auxiliary equipment

For the installation and maintenance of the boiler, you require standard tools, as used in space heating as well as gas and water installations.

2.6 Specifications, dimensions, connections

The specification provides information on the output profile of the Logano plus SB615 gas condensing boiler.

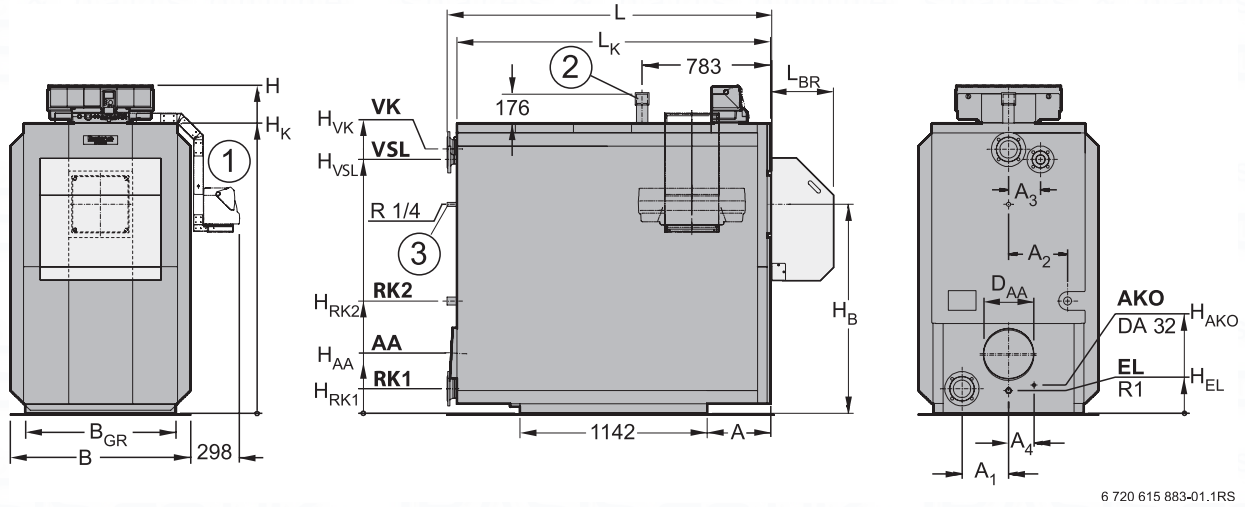

Fig. 1 Specifications, dimensions, connections

Ø AA Flue pipe internal diamater
A Clearance
AKO Condensate outlet
B Boiler width incl. casing
B_{GR} Base frame
D_{AA} Gas outlet
EL Cold water inlet/drain
H Boiler height including control unit, e.g. Logamatic 4311/12 control unit, = H + 235 mm
H_{AA} Flue outlet height
H_{EL} Drain
H_K Boiler height excl. control unit
L Boiler length incl. casing
L_{BR} Burner length
L_K Boiler block length
RK1 Boiler return 1
RK2 Boiler return 2
VK Boiler flow
VSL Flow safety line
1 Side-mounted control unit holder (left/right)
2 Spigot for low water indicator for boiler sizes 400 kW and above
3 Minimum pressure monitor for boiler size 145 – 240 kW or minimum pressure limiter for boiler size 310 kW as accessory

Specifications for Logano plus SB615 Gas									
Boiler size		**Unit**	**145**	**185**	**230[1]/240**	**310**	**400**	**510**	**640**
Length	L	mm	1816	1816	1845	1845	1845	1980	1980
	L_K	mm	1746	1746	1774	1774	1774	1912	1912
Burner length	L_{BR} - Logatop VM	mm	376	376	376	376	–	–	–
	L_{BR} - WG	mm	500	500	500	500	577	868	868
	L_{BR} - BS/M	mm	280	301	–	–	–	–	–
	L_{BR} - RS/M	mm	–	–	580	580	580	580	840
	L_{BR} - RS/M BLU	mm	–	–	–	–	–	840	–
Width	B	mm	900	900	970	970	970	1100	1100
Height	H	mm	1606	1606	1638	1638	1842	2000	2000
	H_K	mm	1376	1376	1408	1408	1612	1770	1770
Width/height/ for transport		mm	720/1340	720/1340	790/1370	790/1370	790/1570	920/1730	920/1730
Length		mm	1735	1735	1760	1760	1760	1895	1895
Base frame	B_{GR}	mm	720	720	790	790	790	920	920
Clearance	A	mm	285	285	285	285	285	367	367
Flue outlet	Ø D_{AA}inside	DN	183	183	203	203	253	303	303
	H_{AA}	mm	300	300	305	305	333	370	370
Combustion chamber	Length	mm	1460	1460	1460	1460	1460	1594	1594
	Ø	mm	453	453	453	453	550	650	650
Burner door	Depth	mm	185	185	185	185	185	185	185
	H_B	mm	985	985	1017	1017	1135	1275	1275
Boiler flow[2]	Ø VK	DN	65	65	80	80	100	100	100
	H_{VK}	mm	1239	1239	1260	1260	1442	1613	1613
Boiler return 1[2]	Ø RK1	DN	65	65	80	80	100	100	100
	H_{RK1}	mm	142	142	142	142	150	150	150
	A_1	mm	275	275	300	300	290	284	284
Boiler return 2[2]	Ø RK2	DN	R 1½	R 1½	R 1½	65	65	80	80
	H_{RK2}	mm	495	495	512	512	597	685	685
	A_2	mm	295	295	310	310	315	360	360
Flow, safety line[3]	Ø VSL	DN	R 1¼	R 1¼	32	32	50	50	50
	H_{VSL}	mm	1180	1180	1213	1213	1327	1549	1549
	A_3	mm	160	160	170	170	210	195	195
Condensate outlet	H_{AKO}	mm	164	164	164	164	164	160	160
	A_4	mm	100	100	120	120	140	155	155
Drain	H_{EL}	mm	85	85	82	82	90	138	138
Logatop gas connection VM		DN	1½	1½	1½	2	–	–	–
Combustion heat output		of kW	54.3	69.3	89.8	116.0	149.5	191.6	239.9
		up to kW	135.8	173.2	224.4	289.9	373.8	478.9	599.8
		Logatop VM							
		Partial load 35% kW	47.5	60.6	75.3	101.5	–	–	–
		Full load kW	135.8	173.2	215	289.9	–	–	–
CO_2 content		%	10						
Weight	net	kg	613	620	685	705	953	1058	1079
	With burner	kg	648/643[1]	655/650[1]	720/715[1]	753/735[1]	1001	1156	1177
Water capacity		l	560	555	675	645	680	865	845
Gas capacity		l	327	333	347	376	541	735	750
Free draught		Pa	50[1]/boiler-dependent[4].						
Hot gas resistance		mbar	1.20	1.55	2.20	2.40	3.00	3.55	4.40
Permissible flow temperature[5]		°C	120						
Permissible operating pressure		bar	4	4	5	5	5.5	5.5	5.5
CE mark, boiler			CE-0085 AT 0075						

Tab. 1 Specification

Specifications for Logano plus SB615 Gas									
Boiler size		**Unit**	**145**	**185**	**230[1]/240**	**310**	**400**	**510**	**640**
System temperatures 50/30 °C									
Rated output	Full load	kW	145	185	240	310	400	510	640
	Partial load	kW	59.2	75.6	97.8	126.3	162.4	208.8	261.5
	Logatop VM								
	Full load	kW	145	185	230	310	–	–	–
	Partial load	kW	51.8	66.1	82.1	110.6	–	–	–
Flue gas temperature[6]	Full load	°C	40	40	46	46	42	44	44
	Partial load	°C	33	33	35	34	37	35	32
Flue gas mass flow rate	Full load	kg/s	0.0552	0.0704	0.0928	0.1200	0.1528	0.1969	0.2466
	Partial load	kg/s	0.0217	0.0277	0.0360	0.0465	0.0603	0.0770	0.0958
	Logatop VM								
	Full load	kg/s	0.0633	0.0808	0.1010	0.1350	–	–	–
	Partial load	kg/s	0.0220	0.0283	0.0352	0.0474	–	–	–
System temperatures 80/60 °C									
Rated output	Full load	kW	132.7	169.2	218.9	282.8	365.2	467.9	585.4
	Logatop VM								
	Full load	kW	132.7	169.2	210.7	282.8	–	–	–
	Partial load	kW	50.6	64.5	80.2	108.1	–	–	–
Flue gas temp.[6]	Full load	°C	66	66	71	71	68	69	71
	Partial load	°C	45	45	45	44	45	44	44
Flue gas mass flow rate	Full load	kg/s	0.0579	0.0738	0.0956	0.1235	0.1592	0.2040	0.2555
	Partial load	kg/s	0.0231	0.0295	0.0383	0.0494	0.0637	0.0816	0.1022
	Logatop VM								
	Full load	kg/s	0.0633	0.0808	0.1010	0.1350	–	–	–
	Partial load	kg/s	0.0220	0.283	0.0352	0.0474	–	–	–

Tab. 1 Specification

1) In conjunction with Logatop VM.
2) According to EN 1092-1 PN6
3) According to EN 1092-1 PN16
4) With Logano plus SB615 with third party burner
5) Safety limit (High limit safety cut-out). Max. possible flow temperature = safety limit (STB) – 18K.
   Example: Safety limit (STB): 100 °C, max. possible flow temperature = 100 - 18 = 82 °C
6) To DIN EN 303. Minimum flue gas temperatures for chimney design calculations in accordance with EN 13394-1 → Technical Guide "Boiler characteristic values for the dimensioning of flue gas systems".

3 Regulations, standards and guidelines

During installation and operation of the system, standard engineering practices, the buildings regulations and any legislative requirements must be observed.

Observe all standards and guidelines applicable to the installation and operation of this system in your country!
The details on the boiler rating plate are definitive and must be observed.

3.1 Low water indicator installation

- For boilers > 300 kW, install a low water indicator, following the manufacturer's technical documents for installation and operation.

For UK & Ireland:
- For boilers > 300 kW, install a low water indicator as required by BS-EN 12828.
- For installation and operation, refer to the technical documents provided by the manufacturer.

For Poland:
- For boilers > 100 kW, equip the boiler with a low water indicator as required by PN-91/B-2414 (p2.5).

- If the LWI connection provided is not used for the installation of an SYR 932.1 low water indicator (Buderus accessory), seal the connection off with a plug (→ Chapter 5.6, page 15).

The Logamatic control system is used for this boiler.

3.2 Standards and guidelines/directives

This device meets all basic requirements of relevant European standards and guidelines:

- 90/396/EC Gas Appliance Directive
- EN 677, EN 303-1, EN 303-3, DIN 4702-6, EN 267, EN 303-2
- 92/42/EC Efficiency Directive
- 2006/95/EC Low voltage Directive
- 2004/108/EC Electro Magnetic Compatibility Directive
- 97/23/EC Pressure equipment Directive
  Standard: TRD 702

Observe the following during installation and operation:

- Local Building Regulations concerning boiler room installations
- Local Building Regulations regarding air supply and extraction equipment as well as connection to a flue
- Latest edition of the IEE Wiring regulations governing electrical connection to the mains power supply
- The technical rules of the gas supply utility regarding the connection of the gas burner to the local mains gas supply
- Regulations and standards regarding the safety equipment in water-filled heating systems
- Installation instructions for heating engineers
- In Belgium, the standards NBN D 30-003, NBN D 51-004 and addenda must be observed.
- In the Netherlands, technical rules, building regulations and other legal requirements (e.g. NEN 1078 (GAVO), NEN 3028 and NEN 1010) must be observed when installing and operating the system.
- In Austria, observe local building regulations as well as ÖVGW Directive G1 or G2 (ÖVGW-TR gas or LPG) during installation. The requirements of the national directive Article 15a B-VG, regarding emissions and efficiency, are fulfilled.
- For Switzerland:
  By carrying out measurements at the installation location, it must be checked whether the LRV maximum permitted limits concerning CO and NOx are being observed. The boilers have been tested according to VKF fire safety regulations. During installation, observe the guidelines for installing and operating gas-fired boilers G3 d/f, the gas guidelines G1 SVGW, and local fire safety regulations in force within the canton.
  The output figures shown in the tab. "Specifications" are nominal output figures.
  In practice, these values will sometimes not be reached within the specified output range in order to adhere to LRV regulations.

Permissible fuels

Logano SB615 Gas and Logano plus SB615 VM gas condensing boilers can be operated using the following fuels:

- Natural gas and liquid propane (LP) according to DVGW (German certification body) worksheet G 260
- Natural gas and liquid propane (LP) supplied by public gas utility (Austria, Switzerland)

- Only use burners that are compatible with these gas types.
- Observe the specifications of the burner supplier.

3.3 Leaks

- Carrying out the leak test.
  The testing pressure is based on the normal operating pressure of the heating system and should be 1.3 times that pressure, and in any case no less than 1 bar.

3.4 Safety limits

Safety limits		
Maximum flow temperature		120 °C[1)]
Permissible operating pressure	145 – 185 kW	4 bar
	210 – 310 kW	5 bar
	400 – 640 kW	5.5 bar
Maximum time constant on:		
High limit safety cut-out		40 s
Control thermostat		40 s

Tab. 2 Safety limits

1) For Germany. Always follow the national standards and regulations of the country where the appliance is installed.

3.5 Boiler positioning

This chapter explains how to properly position the boiler.

CAUTION: System damage due to frost!
- Install the heating system in a room protected from the risk of frost.

3.5.1 Foundation and recommended wall clearances

- When providing foundations or a support area, observe the specified minimum wall clearances (values in brackets) (→ Fig. 2 and Tab. 4) so that the installation and maintenance instructions can be followed without difficulty. The front edge of the boiler should be flush with the edge of the plinth.

It is useful if there is a drain outlet near the installation location.

The support area must be flat and able to support the applied weight, with a slight incline to the rear to ensure ventilation of the boiler.

Make sure there is additional space for noise silencing.

Recommended (and minimum) wall clearances mm					
Boiler size kW	Clearance A_1	Clearance A_2 1)	Length L	Width B	Width/ Height Transport
145	760 (460)	1700 (1200)	1816	900	720/1340
185	760 (460)	1700 (1200)	1816	900	720/1340
240	800 (500)	1700 (1200)	1845	970	790/1370
310	800 (500)	1700 (1200)	1845	970	790/1370
400	900 (1600)	1750 (1250)	1845	970	790/1570
510	1000 (700)	2000 (1500)	1980	1100	920/1730
640	1000 (700)	2000 (1500)	1980	1100	920/1730

Tab. 3 Wall clearances

1) For boiler installations with third party burners, dimension A2 also depends on the burner length[3].

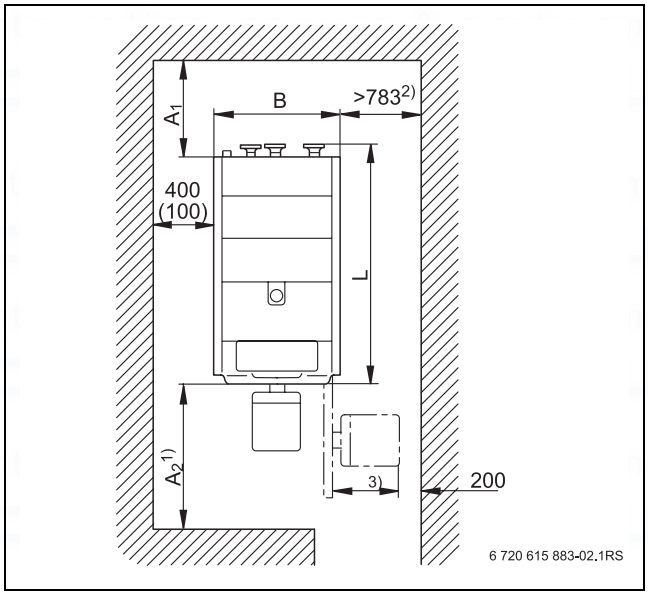

Fig. 2 Boiler room (for dimensions see Tab. 4), dimensions in mm

1) In addition to the burner length[3] take dimension A2 into consideration when installing a third party burner.
2) When using a side-mounted control unit holder.
3) Take account of burner dimensions.

Allow extra space if a flue silencer is to be installed.

If you wish to fix the control unit to the side of the boiler using the holder (accessory), you have to ensure additional clearance (→ Fig. 2, page 11).

3.5.2 Levelling the boiler

- Level the boiler towards the back using a spirit level to prevent air pockets forming inside the boiler.

Use metal shims to level the boiler.

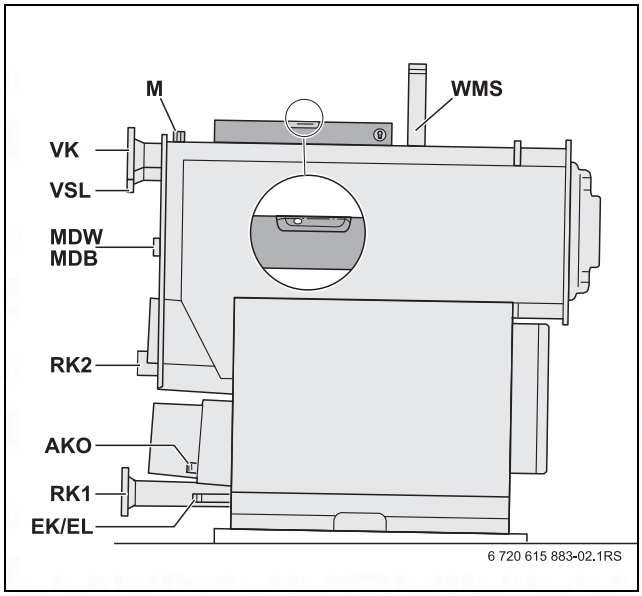

Fig. 3 Level the boiler backwards (for legend, see Fig. 1, page 6)

3.6 Disposal

Please note the following:

- Dispose of packaging in an environmentally responsible manner.
- Dispose of all heating system components that have to be replaced at an authorised disposal site.

4 Transporting the boiler

This chapter describes how to handle the boiler safely without risk of damage.

DANGER: Risk to life from incorrectly secured boiler!

- Use suitable equipment when transporting the boiler, e.g. two pallet trucks or a forklift truck.
- When transporting, secure the boiler to the method of transport to prevent it slipping.

- When raising and transporting the boiler, make sure that the weight is distributed evenly across the forks of the forklift truck/pallet truck.

4.1 Means of transport

4.1.1 Transporting the boiler using a forklift truck

CAUTION: System damage due to damaged boiler body!

- The boiler may only be transported with a forklift truck if the forks are long enough to extend from the front of the boiler to the back.
- Prior to lifting the boiler body, check whether the boiler front and back panels are positioned on the fork of the forklift truck.

- Insert the forks of the forklift truck under the front and the back of the boiler.

4.1.2 Transporting the boiler using two pallet trucks

- Slide a pallet truck under the front and the back of the boiler.
- Raise the boiler evenly using the two pallet trucks.

5 Installation of the boiler

This chapter explains how to correctly install the boiler.

CAUTION: System damage due to open combustion chamber!

The combustion chamber must remain sealed by the burner door so that the stainless steel combustion chamber is not damaged by any welding or grinding work.

- Ensure when fitting the front thermal insulation pad that the combustion chamber remains sealed by the burner door.

5.1 Checking delivery for completeness

- Upon delivery, check all packaging for damage.
- Check the delivered package(s) for completeness (→ Chapter 2.4).

5.2 Disposing of packaging

- Dispose of packaging in an environmentally responsible manner.

5.3 Minimum clearances / product dimensions

Observe the recommended minimum wall clearances when positioning (→ Tab. 3, page 11).

5.4 Changing the hinging of the burner door

The burner door can be moved from the right-hand side (factory-set) to the left-hand side.

DANGER: Risk of injury from unsupported door!

- Change the door hinging only when the door is closed and bolted.

- Push the hinge bolts out of the hinges from underneath [1].
- Refit the washer [2] and the two hinge pins to the adjacent hinges. Make sure that the washer is re-installed.

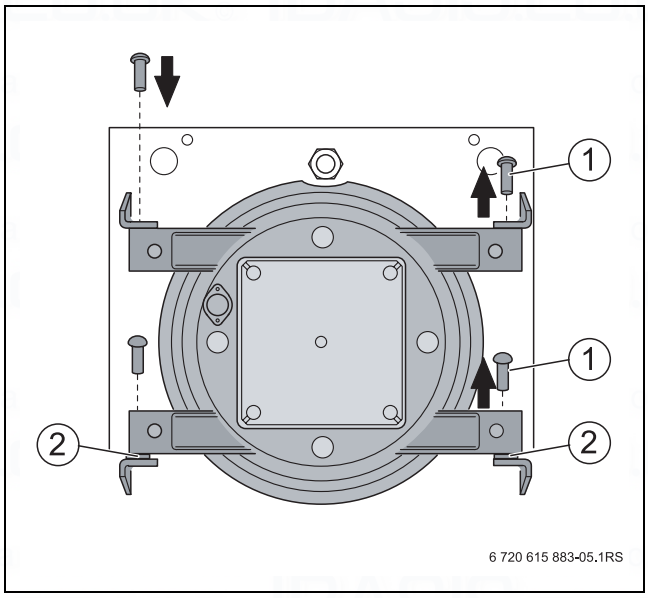

Fig. 4 Reversing the door hinges

1 Hinge pin
2 Washer

5.5 Installing the minimum pressure switch and minimum pressure limiter

Note that a minimum pressure monitor must be connected for 145 kW to 240 kW!
For 310 kW (145 kW and higher in Poland) a minimum pressure limiter (MDB) must be installed. This requires an R½ to connection piece adapter R¼ .

- Connect the minimum pressure monitor or minimum pressure limiter (with R½ to R¼ connection piece adapter) to the MDW/MDB connection on the boiler (→ Fig 5).

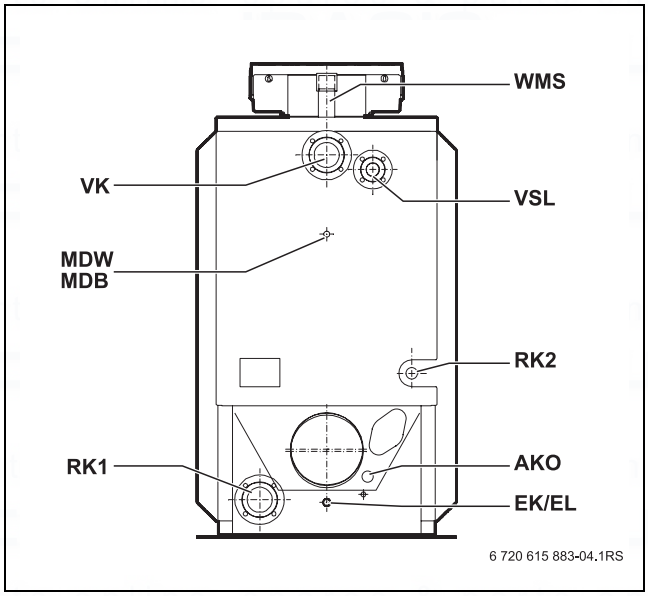

Fig. 5 Logano plus SB615 Gas boiler connections

5.6 Low water indicator (accesory), fitting (400 – 600 kW)

For Germany

- For boilers > 300 kW, install a low water indicator or minimum pressure limiter as required by DIN-EN 12 828.
- For installation and operation, refer to the technical documents provided by the manufacturer.

For Poland

- For boilers > 100 kW, equip the boiler with a low water indicator as required by PN-91/B-2414 (p2.5).

- Seal the flow pipe for the low water indicator into the 2" LWI connection on the boiler (→ Fig. 5).
- Fit the low water indicator onto the low water indicator tube.
- If the LWI connection is not being used for the installation of a low water indicator, remove the plastic plug and close off the LWI connection with a blanking plug.

5.7 Connecting the boiler to the pipework

Please observe the following information regarding the boiler connection to the pipework. This is important for fault-free operation.

To protect the boiler from debris within the system water, we strongly recommend the installation of a dirt trap in the return leg of the plant.

CAUTION: System damage due to leaking connections!

- Ensure pipework connections to and from the boiler are free of stress.

5.7.1 Connecting the return to the boiler

- Connect the heating system return to the boiler return connections RK1 and RK2 (→ Fig. 6).

Install a dirt trap in the return close to the boiler in order to protect the appliance from debris within the system water.

5.7.2 Connecting the flow to the boiler

- Connect the heating system flow to the boiler flow connection VK (→ Fig. 6)

5.7.3 Connecting the safety line flow

CAUTION: System damage from connecting the wrong components to the pressure relief!

- Never connect a DHW cylinder or other heating circuit to the VSL safety line flow connection (→ Fig. 6).

- Fasten the relief valve to the VSL safety line flow connection using 4 screws (→ Fig. 6).

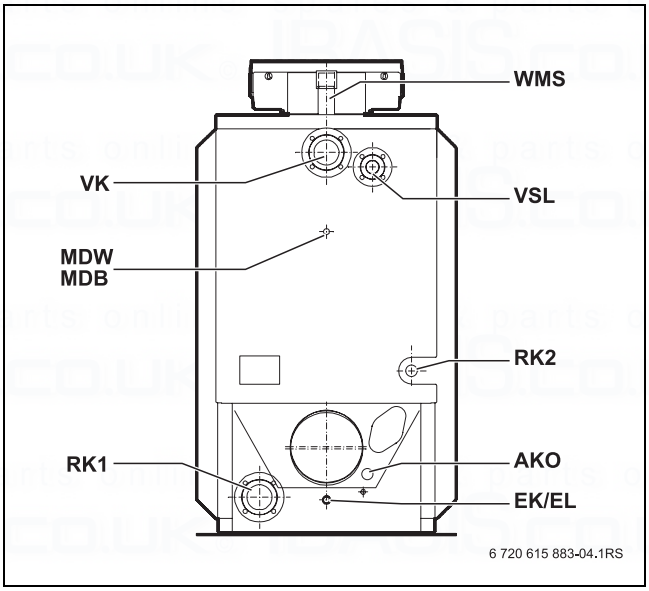

Fig. 6 Logano plus SB615 Gas boiler connections

5.8 Filling the heating system and checking connections for leaks

Check the heating system for leaks before commissioning to ensure there are no leaks when the system is in operation.

DANGER: Risk to health from drinking water contamination!

- Always observe the regulations and standards applicable in your country for the prevention of contamination of drinking water (e.g. by water from heating systems).
- Observe EN 1717.

CAUTION: Risk of system damage from excess pressure when testing for leaks!

Pressure, control and safety equipment may be damaged through excessive pressure.

- Ensure that, whilst you are carrying out a leak test, no pressure, control or safety equipment is fitted, which cannot be shut off towards the boiler water chamber.

CAUTION: System damage due to thermal stresses!

- Only fill the system when cold (the flow temperature must be no more than 40 °C).
- When the heating system is in operation, do not fill it via the boiler fill and drain valve. Instead, only use the filling valve in the heating system (return).
- Pay attention to the water quality as specified in the operator's log, and record the volume and quality of the water used to fill the system.

- Fill the heating system with water (→ Chapter 6.2).
- Carrying out the leak test.
  The testing pressure is based on the normal operating pressure of the heating system and should be 1.3 times that pressure, and in any case no less than 1 bar.
- Check all connections for leaks.

5.9 Fitting the lagging

DANGER: Risk of injury due to burner door falling off when opened!

- Make sure that both hinge bolts (→ Fig. 7, [1]) are inserted.

When fitting the insulation, ensure that the fabric backing is arranged on the outside and the cut-outs at the rear.

- Push the insulation underneath the boiler through to the opposite side (→ Fig. 7).

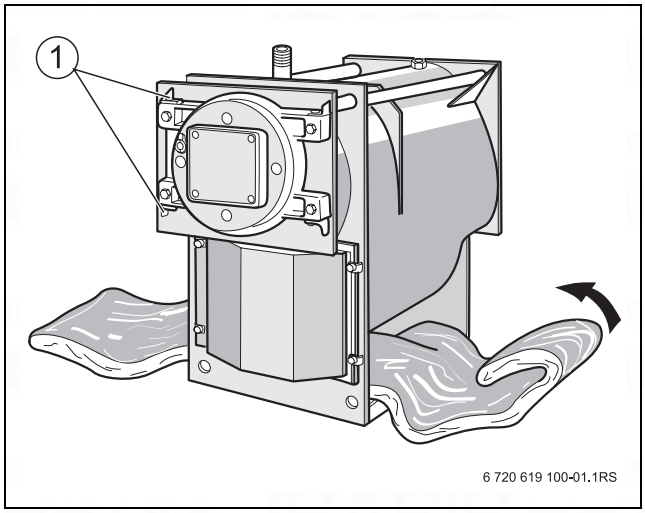

Fig. 7 Push the insulation underneath the boiler through to the opposite side.

1 Hinge pin

- Wrap thermal insulation jackets overlapping around the boiler and fix at the top with 5 spring clips [3].
- Close off the cut-out for the low water indicator [1] with two spring hooks [3].
- Undo the door bolts and open the burner door.
- Place the lower front insulation section on the front of the boiler body and secure to the right and the left onto the wrap-around insulation with 2 spring hooks on each side [3].
- Locate the insulation strip [2] at the top around the boiler shell ring, and secure to the right and the left onto the lower front insulation section with two spring hooks on each side [3].
- Place the upper front insulation section on the front of the boiler body.

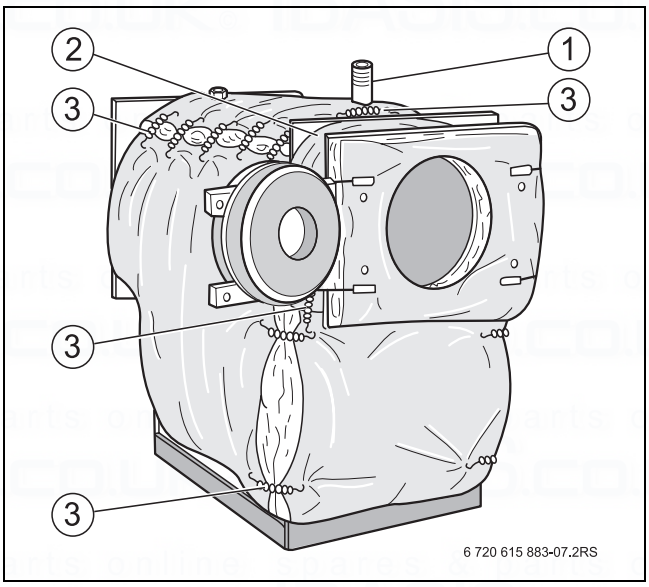

Fig. 8 Fitting and fastening the lagging

1 Low water indicator
2 Strip of lagging material
3 Tension springs

Keep the cut-outs for the hinges and the threaded sleeves for the burner door bolts free.

- Close the door again and secure with door bolts.

- Place the rear insulation section onto the rear of the boiler in the position dictated by the openings and secure to the right and the left onto the wrap-around insulation with 4 spring hooks (→ Fig. 9).

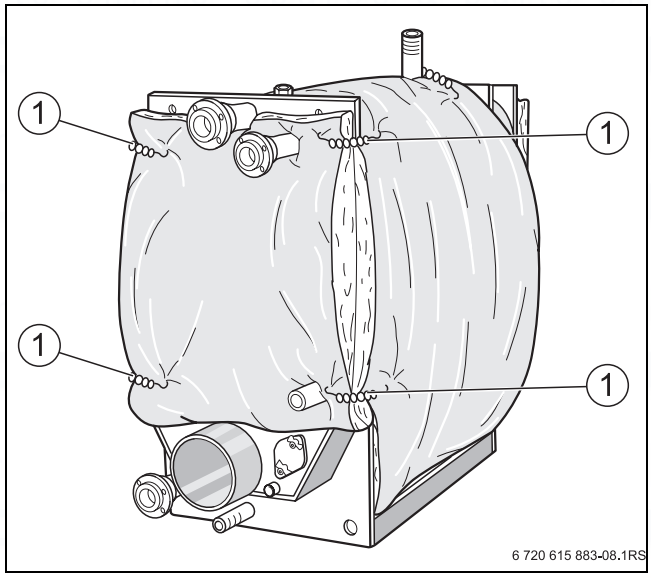

Fig. 9 Positioning and securing the rear insulation section

1 Tension springs

5.10 Fitting the connection plates

- Insert front connection plate (with trapeze-shaped cut-out facing downwards) over the threaded studs, with the 2 holes at the top, and fasten with nuts (→ Fig. 10).
- Insert back connection plate (with trapeze-shaped cut-out facing downwards) over the threaded studs, with the 2 holes at the top, and fasten with nuts (→ Fig. 10).

The angled sections on the connection plates should point outwards, and both the front and rear connection plate should be horizontally level (→ Fig. 10).

- Balance the front and rear connection plates with a spirit level.

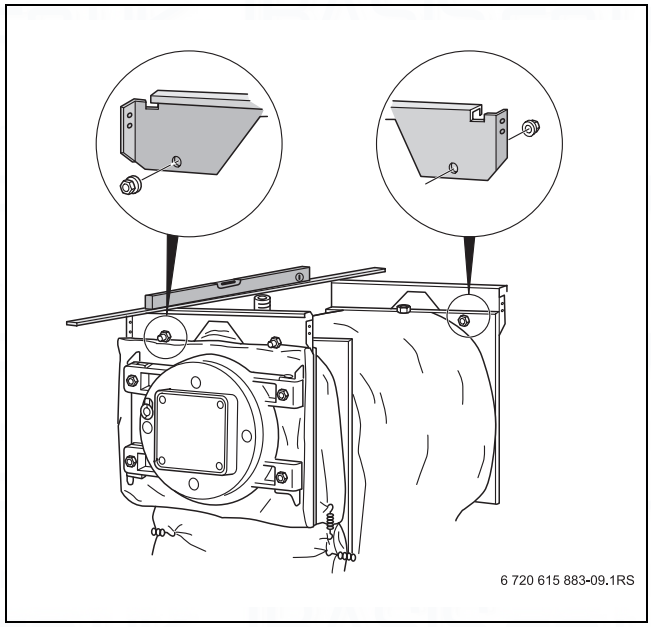

Fig. 10 Locating and securing the front and rear connection plates

- Hook side connection plate with the "U" into the cut-out on each of the front and back connection plates. Each connecting plate is secured in the front hole and the rear slot using 2 self-tapping screws.

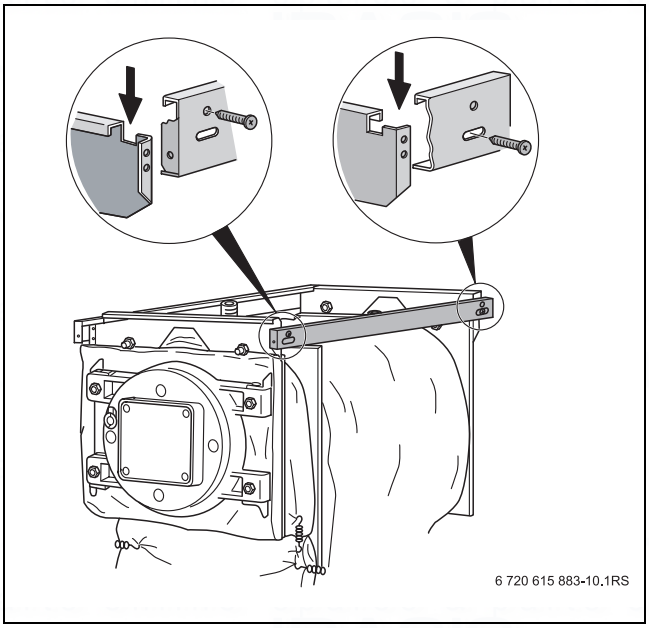

Fig. 11 Inserting and securing the lateral connection plates

5.11 Fitting the side panels

The cutout in the flange of each side panel section must be in the centre of the boiler.

- Insert side panels with the flange behind the boiler frame at the bottom and in the slot in the centre.

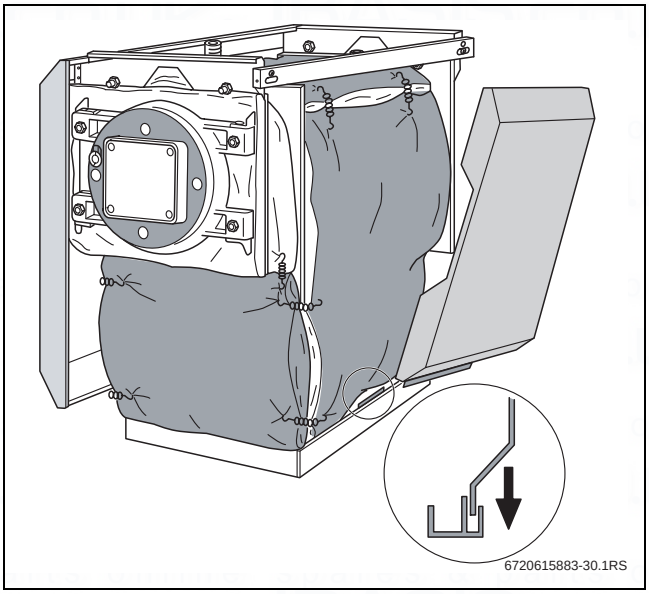

Fig. 12 Inserting side panels

- Lift side panels and hook into the folded edge in the side connection plates [1].
- Press ends of the lagging behind the folded edge on the side panel.

5.12 Routing the burner cable

- Insert the strain relief [2] for the burner cable [3] with both pins into the holes on the angled section of the left or right side panel.
- Adjust the burner cable [3] to the desired length, feed through the strain relief [2], close tab and fasten to the base rail with 2 self-tapping screws.

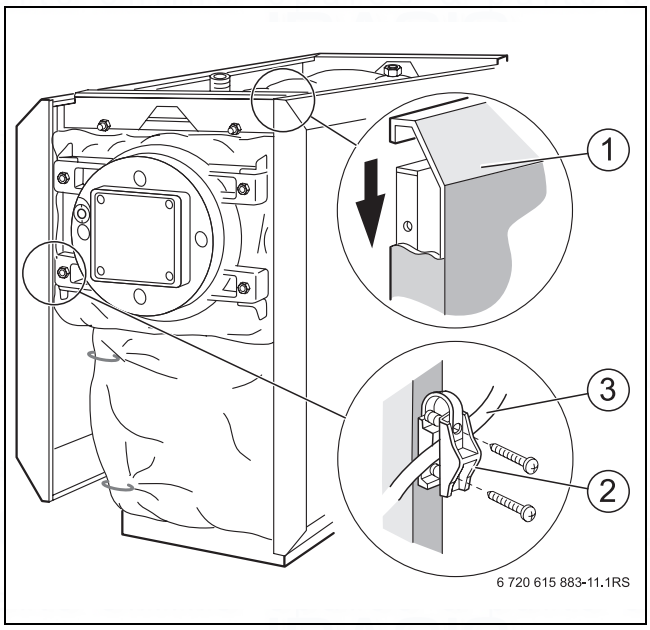

Fig. 13 Hook in the side panels and connect the burner cable

5.13 Fitting the back plate

For boiler sizes 145 kW to 310 kW, the rear wall is in two parts (→ Fig. 14), for boiler sizes 400 kW to 640 kW only one part (→ Fig. 15).

Boiler sizes 145 kW to 310 kW

- Secure the lower boiler cover [1] with 5 self-tapping screws [2] to the side panels.
- Insert the upper rear panel section [4] with the Z-fold behind the lower rear panel section, and secure onto the side panels with four self-tapping screws [3].
- Make sure that the two upper self-tapping screws also pass through the connection plates.
- Secure one or two cable clips [5] or a cable duct on the fold on the upper rear panel section.

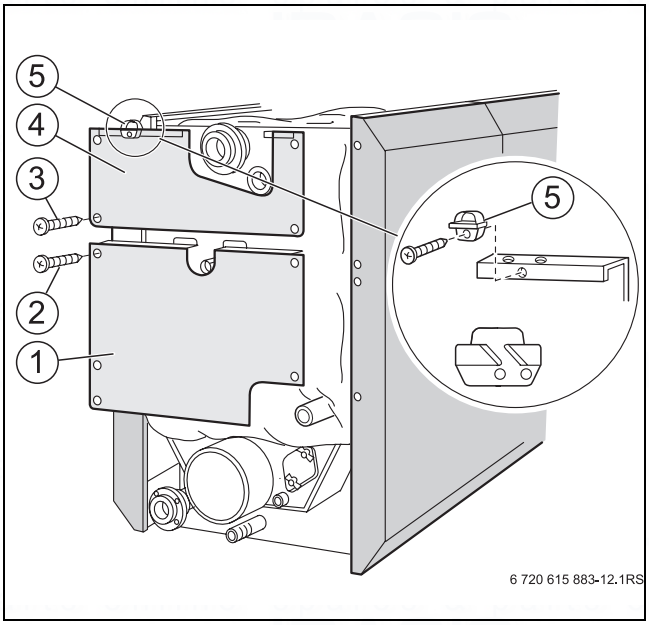

Fig. 14 Screwing the 2-part real panel in place (boiler rating 145 to 310 kW).

1 Lower rear panel
2 5 self-tapping screws
3 4 self-tapping screws
4 Upper rear panel
5 Cable clamp/cable channel

Boiler sizes 400 kW to 640 kW

- Secure the boiler cover [1]with 4 self-tapping screws on the right and left-hand side to the side panels.
- Make sure that the two upper self-tapping screws also pass through the connection plates.
- Secure one or two cable clips [2] or a cable duct on the fold on the rear panel section.

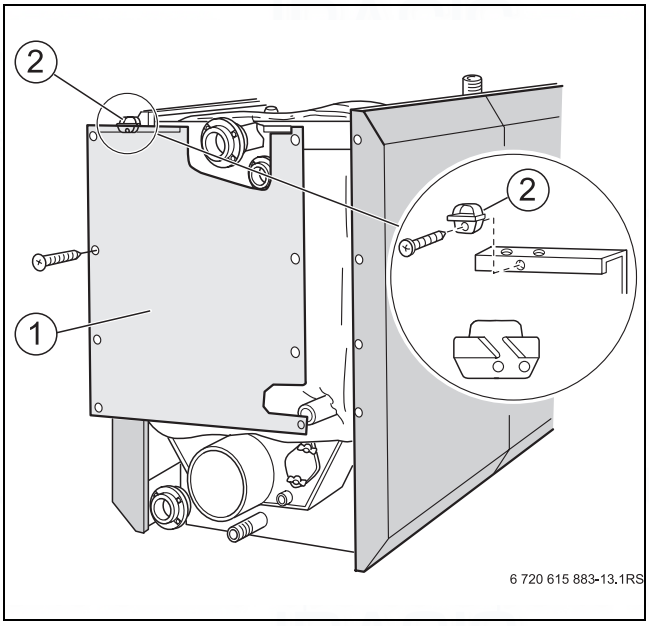

Fig. 15 Screwing rear panel in place (boiler rating 400 to 600 kW)

1 Back panel
2 Cable clamp/cable channel

5.14 Fitting the front boiler cover

- Place front boiler cover on top of the folded edges of the side panels and pull forwards until the right and left-hand hooks click into place in the slot (→ Fig. 16).
- Screw front boiler cover firmly into the side connection plates by screwing 2 self-tapping screws through the tabs on the boiler cover and the folded edge on the side panels (→ Fig. 16).

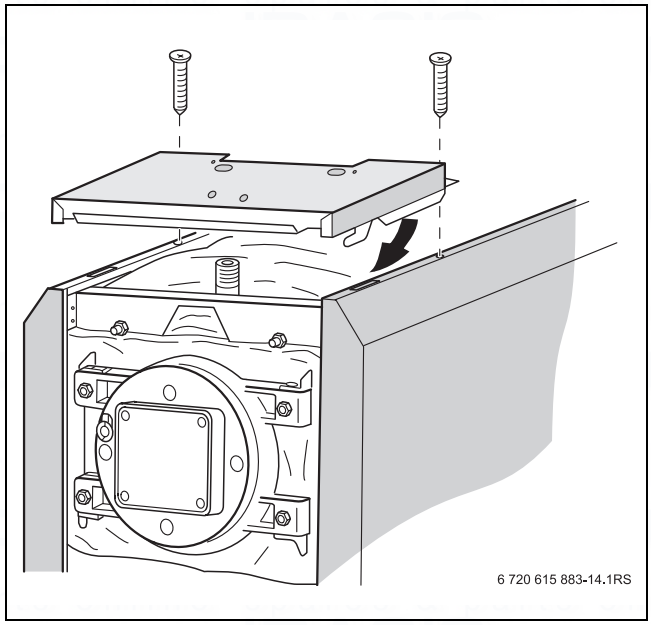

Fig. 16 Fitting the front boiler cover

5.15 Fit and connect the control unit (accessory)

You can use the following control units with the boiler: Logamatic 4211, 4212 as well as 4321 and 4322 (accessories).

The control unit can be fitted either on top of the boiler or, with the side-mounted control unit holder (accessory), onto the boiler side.

Refer to the enclosed installation instructions if using the optional control unit side holder.

Fig. 17 shows the control unit and the front cover [1] from the back.

- Undo both screws from cover [1]. Lift off the cover.
- Fit the control unit at the front by inserting the hooks [4] into the oval holes in the front boiler cover [5].
- Pull the control unit forwards and then tip back. The flexible hooks [2] must latch into the rectangular openings at the rear of the front boiler cover [3].
- Screw the base of the control unit on the left and right of the cable entry onto the front boiler hood [6] via the holes [7] using two self-tapping screws.

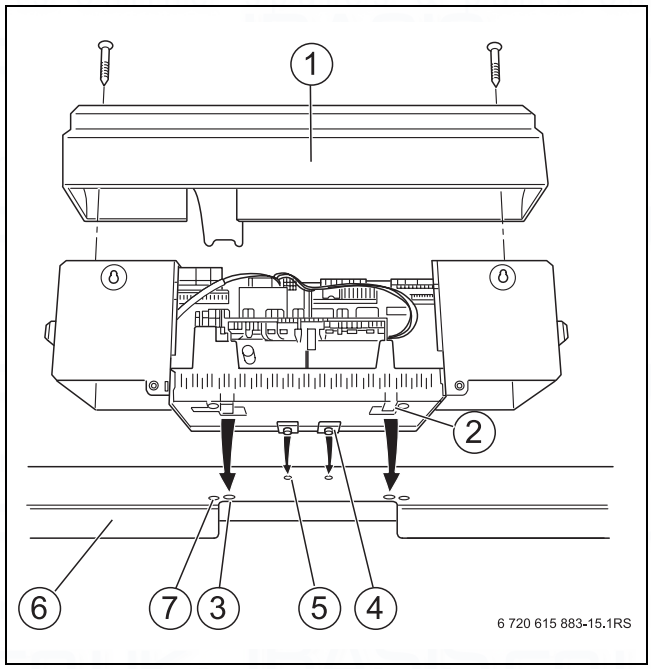

Fig. 17 Fitting the control unit

1 Cover
2 Resilient hooks
3 Rectangular openings in the front boiler cover
4 Locking tabs
5 Oval holes in front boiler cover
6 Cable entry in the front boiler cover
7 Holes for self-tapping screws

Observe the following when connecting the control unit:

- Carefully route the cables/leads and capillary tubes.
- Never kink capillary tubes during installation.
- Always have electrical work inside the heating system carried out by a qualified electrician or electrical contractor.
- Observe all local regulations.
- Create a permanent connection in accordance with EN 50165.

- If necessary, make knock-outs [1] in the rear panel of the cable duct or remove the rear panel section [2].

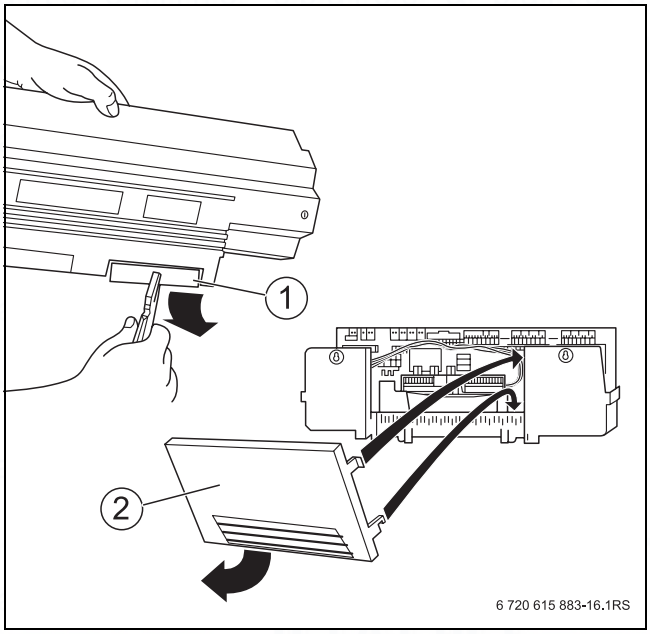

Fig. 18 Preparing the cable entry

1 Knock-outs
2 Rear panel component

- Make the plug-in connection in the control unit in accordance with the labelling on the terminal strip.
- Route the burner cable through the cable entry in the front boiler cover to the control unit.
- Connect the burner cable to the control unit in accordance with the labelling on the plug-in connector strip.

The positions of the terminal strips in the various Logamatic control units are not identical, however the labelling abbreviations and colour codes remain the same. E.g. The outdoor temperature sensor connection is always labelled FA.

- Make all electrical connections to the appropriate plug-in connectors according to the wiring diagram.

Secure all cables with cable clips (included with control unit). To do this, carry out the following steps:

1. With the cable in place, insert the cable clips, as shown in Fig. 19, from above into the slits in the clip frame.
2. Slide the cable clamp downwards.
3. Press in.
4. Flip the lever up.

- Put the cover (→ Fig. 17, page 23) back on the control unit.
- Tighten screws (→ Fig. 17, page 23) to secure control unit cover.

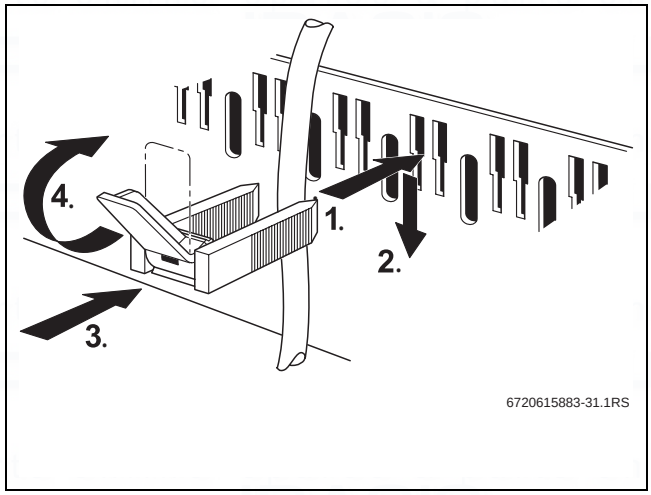

Fig. 19 Securing the cable with cable clips

5.16 Installing the temperature sensor set

Test point M is located at the top rear of the boiler.

Observe the following points before installing the temperature sensor set:

- Take care to ensure correct cable and capillary pipe routing.
- Create a permanent mains power connection in accordance with EN 50165.
- Observe all local regulations.

- Route the capillary tubes with temperature sensors and quarter dummy plugs to the sensor well in test point M and insert the temperature sensor into the sensor well until it bottoms out.

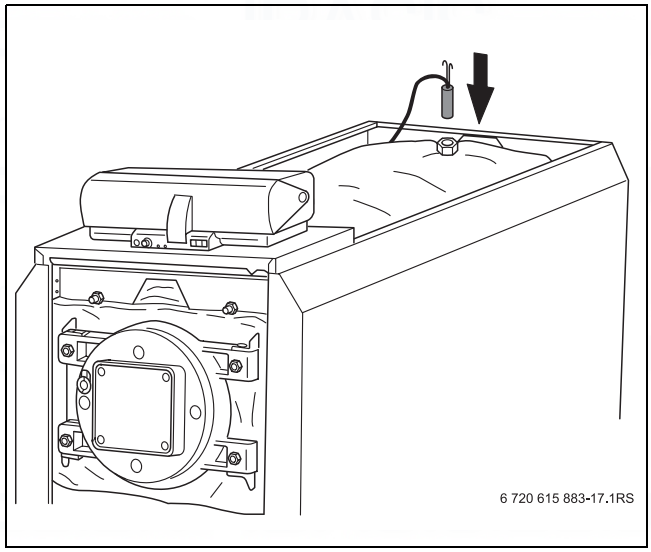

Fig. 20 Inserting temperature sensor into the sensor well

- The plastic coil [2] for holding together the temperature sensor is pushed back automatically when it is inserted.

> To ensure a good contact between sensor well [4] and sensor surfaces, and thereby a reliable temperature transfer, the compensating spring [1] must be pushed in between the sensors.

- Coil up any excess cable, capillary tube and sensor leads and place on the boiler body insulation.
- Connect the temperature sensors to the control unit.

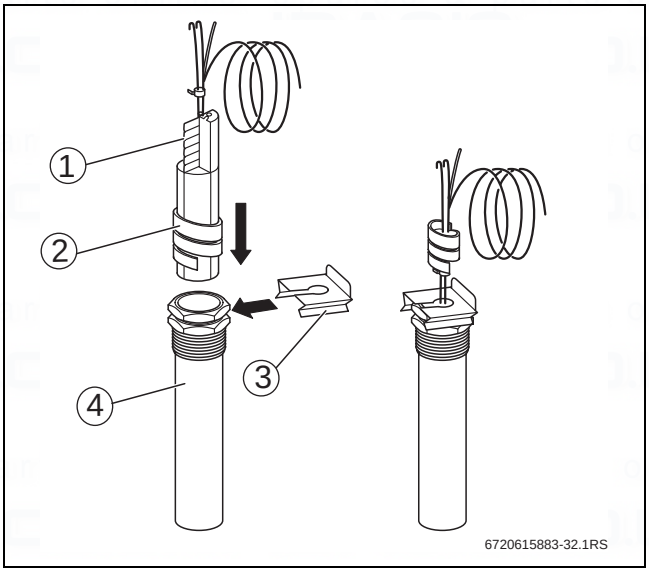

Fig. 21 Inserting the plastic coil into the sensor well

1 Compensating spring
2 Plastic spiral
3 Sensor retainer
4 Sensor well

5.17 Fitting the boiler cover sections

> From 400 kW upwards, the second cover part is provided with a recess (→ Fig. 22). The rear parts are identical and are positioned with their fold forward.

Boiler sizes 145 kW to 400 kW

4 boiler cover sections

Boiler sizes 510 kW to 640 kW

5 boiler cover sections

- Loosely locate the boiler cover sections one after the other on the right and left side panels.

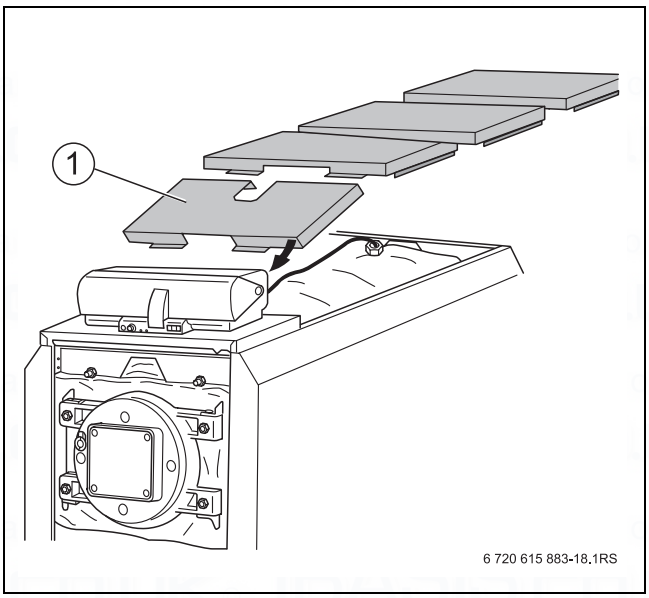

Fig. 22 Fitting the boiler cover sections - Example

1 Recess for boiler sizes 400 kW and upwards

5.18 Fitting the front panel

- Push the tabs on the lower connection plate from below into the slots to the left and right on the side panels and secure the connection plate with two machine screws on the front of the boiler body.

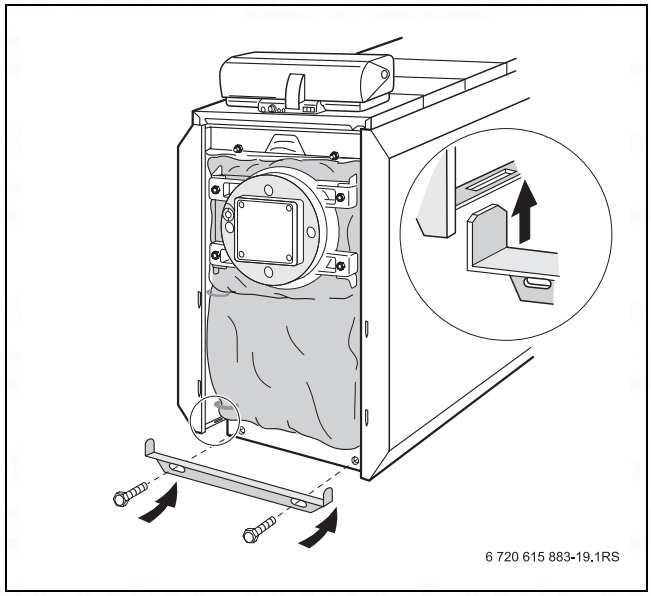

Fig. 23 Securing the lower connection plate

- Hook the lower front panel section with the four hooks [1] into the slots to the left and right on the side panels.
- Insert the upper front panel section with its hooks [2] into the slots on the lower front panel, and hook the top into the front boiler cover [3].

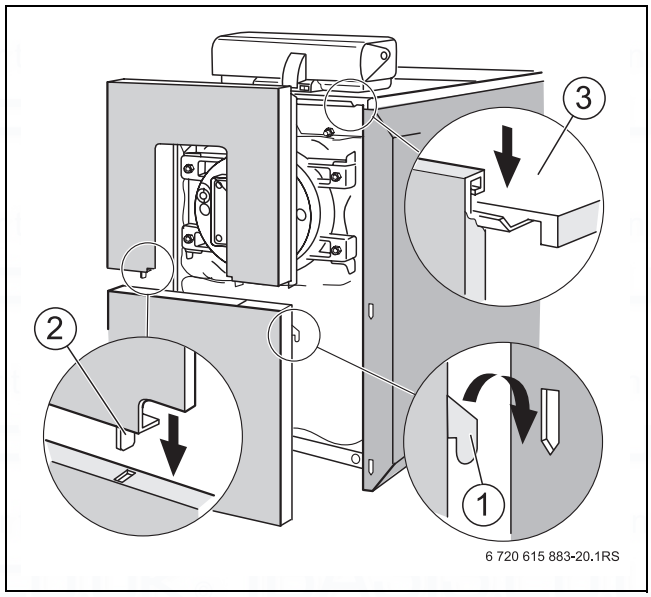

Fig. 24 Fasten lower and upper front panels

1 Hook lower front panel
2 Hook upper front panel
3 Hooking the upper front panel into the boiler cover

5.19 Securing the shield, device label and data plate

- Fit the decorative panel [1] by inserting the hooks into the front panel.
- Fix appliance insignia plate [2] to front panel.
- Attach the data plate [3] to either the left or right side panel, depending on which is most convenient.

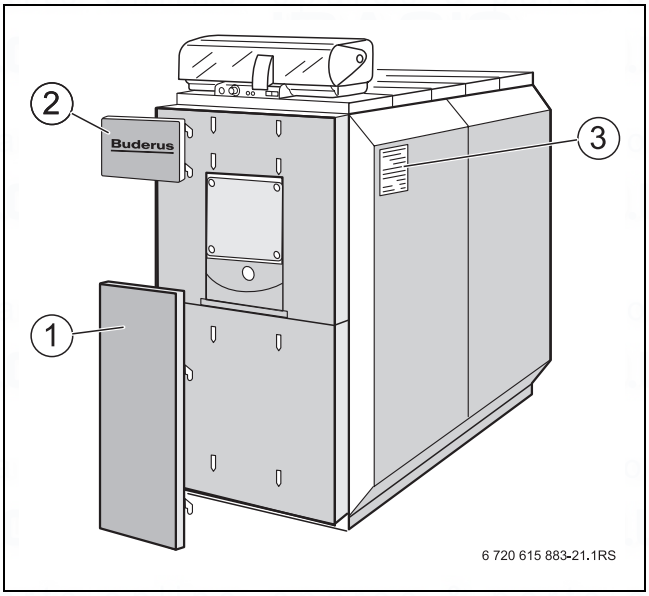

Fig. 25 Attaching the data plate

1 Restrictor
2 Device label
3 Data plate

5.20 Connecting and filling the neutraliser (accessory)

Please refer to the separate installation manual for installation and maintenance of the neutralisation device.

- Fit the drain hose [1] with a hose clip to the condensate outlet (siphon).

> **CAUTION:** System damage!
> You must ensure that the condensate generally runs via the flue pipe into the boiler. If this is not possible, you must only use stainless steel or plastic tees in the separate pipe inlet.
>
> - In ceramic flue systems, you must fit a silt trap (pot).

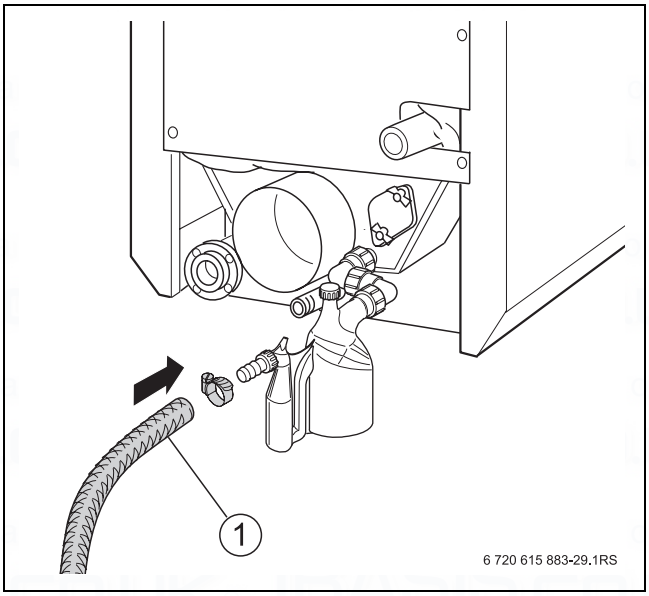

Fig. 26 Connecting and filling the neutraliser

1 Drain hose

5.21 Installing condensate pipework

When installing the condensate pipework, observe the following:

- Carefully drain the condensate created inside the boiler and possibly in the flue pipe.
- Drain the condensate into the sewerage system in accordance with the requirements in your country.
- Observe regional requirements.

- Fit the siphon provided to the outlet on the flue gas collector [5].
- Unscrew the locking cap and fill the siphon with about two litres of water.

DANGER: Risk to life from poisoning!

Siphons which are not filled with water, or open connections, can cause a risk to life from escaping flue gas.

- Fill the siphon with water.
- Ensure that the siphon and flue gas connections are sealed.
- Ensure that the sealing disc with gasket is seated in the locking cap.

Neutralisation devices are available as accessories.

- Install neutralisation device (accessory) as detailed in the installation instructions.

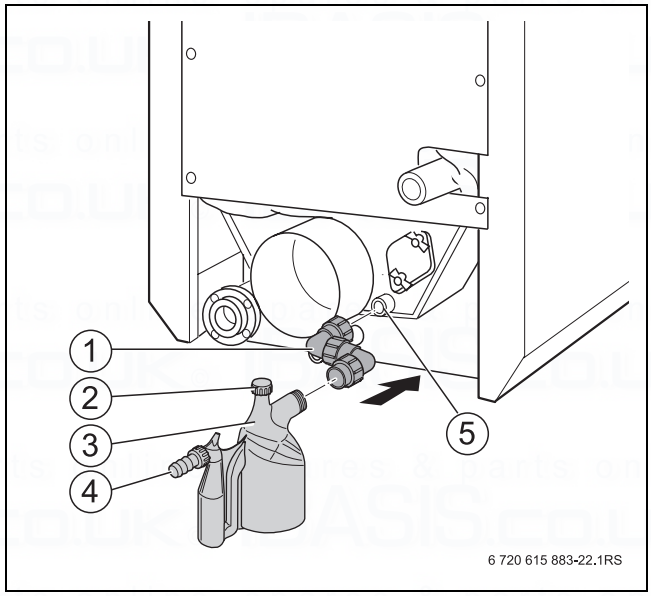

Fig. 27 Installing condensate pipework

1 Connection elbow
2 Locking cap
3 Siphon
4 Siphon outlet to neutralisation device or waste water pipe
5 Flue gas collector

5.22 Connecting the flue side of the heating system

This chapter explains how to install the boiler to the flue.

5.22.1 General information on flue systems

- The flue gases in question must be led outside into the open air via flue pipes and flues.
- Use flue pipes and flues that conform to building regulations and are resistant to humidity.
- Before commissioning the heating system, check that the flue gas system used is suitable for the boiler.
- Follow guidelines in the planning instruction.
- Check the flue connection for leaks.
- Observe the flue system manufacturer's installation instructions.

5.22.2 Fitting the flue pipe sealing collar (accessory)

- Fit the flue pipe sealing collar as described in the separate installation manual.

5.22.3 Fitting the flue temperature sensor (accessory)

- Fit the flue gas temperature sensor as described in the separate installation manual.

spares & parts online IBASIS.CO.UK

5.23 Fitting burner (accessory) and connecting gas supply

This chapter explains how to fit a burner.

- A burner that is made dirty by building work must be cleaned before being commissioned.

CAUTION: System damage from incorrect burner!

- Only use burners that meet the technical requirements of the Logano plus SB615 Gas boiler.

CAUTION: Damage to system through incorrect burner adjustment (overloading)!

- Make sure that the value set does not exceed the combustion heat output Qn (Hi) stated on the rating plate.

5.23.1 Fitting the burner plate

A burner plate without pre-drilled holes is included with the boiler.

Do not work on the burner plate when installed.

Predrilled burner plates are available from Buderus upon request (accessory).

If you have not ordered the predrilled burner plates from Buderus, the enclosed blanking plate will have to be machined accordingly onsite.

- Drill or cut the burner plate to match the required blast tube diameter.
- Drill holes for fastening the boiler using the burner connecting flange as a template.
- Fasten the burner plate to the burner door using the hex-head bolts and washers (seal with gasket).

5.23.2 Fitting the burner to the burner plate

When fitting the burner (accessory), you must observe the burner manufacturer's instructions.

- Depending on the burner make or type, you must use the corresponding burner plate or make necessary alterations. Adjust the hole in the burner door thermal insulation if necessary.
- Seal the gap between blast tube and lagging [1] on-site.

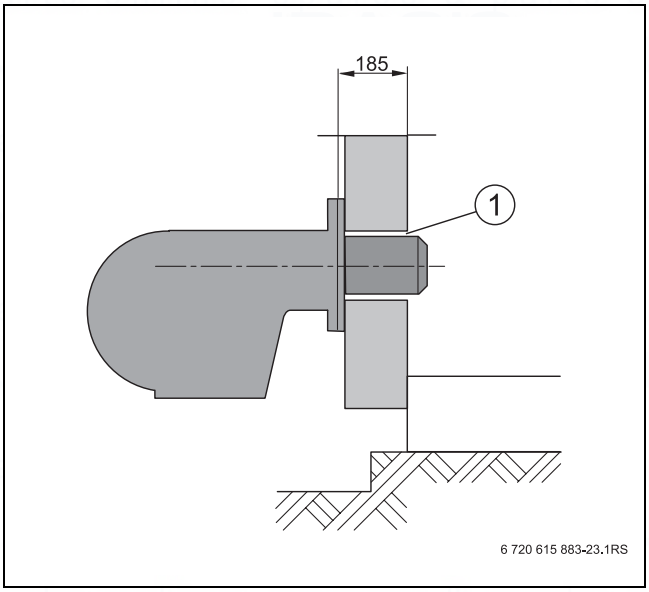

Fig. 28 Sealing the gap between burner and insulation (dimensions in mm).

1 Area between blast tube and thermal insulation

5.23.3 Connecting the gas supply

- Make the gas connection in accordance with all locally applicable regulations.
- Connect the gas pipe without stress to the gas connector.
- Install a gas shut-off valve in the gas supply pipe.

We recommend that a gas filter be installed in the pipework in accordance with local regulations.

- Before initial start-up, check for external leakage on the new length of piping up to the gas valve.
- If a leak is discovered, all connections must be checked using a frothing agent.

DANGER: Risk to life from gas explosion!
Leaks may have been created on pipes and fittings following the commissioning work.
- Carry out the correct leak tests.
- Only use approved leak detection agents for leak detection.

CAUTION: Risk of system damage due to short circuit!
- Cover areas at risk prior to carrying out a leak test.
- Do not spray the leak solution on wiring openings, plugs or electrical connections. Do not allow it to drip onto them either.

6 Initial operation

This chapter describes how to start up the heating system.

- Perform start up according to the user manuals for the boiler, burner, low water indicator and electronic heating circuit control.
- When handing over the system, show the operator how it functions and how to operate it, and hand over the technical documentation to them. Complete the commissioning report.
- Draw the operator's attention to the maintenance requirements and recommend arranging a maintenance contract.

CAUTION: System damage due to heavy dust deposits!

- Do not operate the boiler where heavy dust contamination persists, e.g. through building work inside the boiler room.

6.1 Flushing the heating system

Flush the heating system prior to commissioning to prevent contamination that could e.g. block and damage the circulation pump.

DANGER: Risk to health from drinking water contamination!

- Always observe the regulations and standards applicable in your country for the prevention of contamination of drinking water (e.g. by water from heating systems).
- Observe EN 1717.

CAUTION: Boiler damage from corrosion and sludge!

- It is essential to flush the entire heating system before filling with heating water.
- Check the quality of the fill and top-up water, so as to avoid scaling and corrosion. (Note the “Water treatment...” operator's log.)

If a heating system contains several heating circuits, these must be flushed one after the other.

- Isolate the heating flow and return on the boiler.
- Connect the heating flow to a fresh water connection.
- Connect the hose to the heating system return.
- Put the hose from the heating return into a drain.
- Open all shut-off devices and radiator valves in the heating system.
- Flush the heating system with fresh water until clear water emerges from the heating return.

6.2 Filling the heating system

DANGER: Risk to life from escaping flue gases!

- Before commissioning the boiler or the neutralisation device, pour about 10 litres of water into the inspection opening or into the heating space in order to fill up the neutralisation holder and prevent the escape of flue gases from the boiler siphon.

DANGER: Risk to health from drinking water contamination!

- Always observe the regulations and standards applicable in your country for the prevention of contamination of drinking water (e.g. by water from heating systems).
- Observe EN 1717.

CAUTION: System damage due to thermal stresses!

- Only fill the system when cold (the flow temperature must be no more than 40 °C).
- When the heating system is in operation, do not fill it via the boiler fill and drain valve. Instead, only use the filling valve in the heating system (return).
- Pay attention to the water quality as specified in the operator's log, and record the volume and quality of the water used to fill the system.

For the correct use and treatment of the fill and top-up water, follow the Code of Practice K8 in the applicable Buderus catalogue, as well as VDI 2035.

The pH value of the heating water will increase after the heating system has been filled.

- After 3 – 6 months (during the first service), check whether the pH value of the heating water has stabilised.

6.3 Preparing the heating system for operation

Observe the following when commissioning:

- Before commissioning, bleed the heating system via the venting facility provided for this purpose.
- Check that the inspection opening of the flue gas collector is closed (→ Fig. 32, page 42).
- Ensure that the burner door is secured with door bolts.
- Check that the safety equipment is functioning properly.

6.4 Commissioning the control unit and the burner

- Use the control unit to start the boiler.

By commissioning the control unit, you also automatically commission the burner. The burner can then be started via the control unit. For further details, see the installation instructions of the relevant control unit or burner.

- Complete the commissioning report in the technical burner documentation.

spares & parts online IBASIS.CO.UK

6.5 Commissioning report

▶ Sign all commissioning work as completed and enter the date.

Commissioning tasks		Page (individual steps)	Comments (signature)
1.	Fill the heating system with water.	page 35	
2.	Vent the heating system.	page 36	
3.	Carry out leak testing (gas, flue gas, water).	page 33, page 30, page 17	
4.	Start up the control unit.	→ control unit documentation	
5.	Start-up the burner.	→ burner documentation	
6.	Perform a leak test on the hot gas side. After being in operation for a short time, retighten the burner door bolts to prevent leaks around the door as a result of the packing cord settling.		
7.	Inform the system user, hand over the technical documentation, and enter the fuel used in this heating system in the table of the operating instructions.		
8.	Confirm correct commissioning.		
Company stamp/signature/date			

7 Shutdown

CAUTION: System damage due to frost!
When the heating system is switched off, the system water can freeze up and expand in cold weather.

- Protect your heating system against frost when temperatures below zero are expected. Where there are no frost stats to protect the vulnerable parts of the system, drain the heating water from the lowest point of the heating system using the fill & drain valve or the radiator. The air vent valve at the highest point in the system must also be open.

CAUTION: System damage due to frost!
The heating system can freeze up during a power failure or if the power supply has been switched off.

- Check the “Control unit settings” to ensure the system remains operational (especially when there is a risk of frost).

7.1 Shutting down the heating system

Shut down your heating system using the control unit. The burner is automatically shut down when the control unit is shut down.

- Turn the switch on the control unit to the “0” (OFF) position.
- Isolate the fuel supply to the burner.

7.2 Shutting down the heating system in an emergency

In an emergency (and only in an emergency), switch OFF the heating system via the boiler room circuit breaker or heating system emergency isolation switch.

- In other dangerous circumstances, immediately isolate the main shut-off valve and the electrical power supply of the heating system via the boiler room main circuit breaker or the emergency isolation switch for the boiler room.
- Isolate the fuel supply to the burner.

8 Inspection/maintenance

8.1 General notes

Offer your customer an annual contract covering inspection and demand-dependent service. Refer to the "Inspection and maintenance reports" Chapter 8.6 for information about what such contracts should contain.

The operator is obliged under the terms of paragraph 9 of the heating plant legislation to arrange to have the heating system cleaned and maintained.

- The entire condensing unit (including any neutralisation device) must undergo maintenance once a year.
- We recommend arranging an inspection and maintenance contract.
- For burner maintenance, follow the burner manufacturer's maintenance instructions.

8.2 Preparing the boiler for inspection and maintenance

- Shut down the heating system (→ Chapter 7).

DANGER: Risk to life from electricution when the heating system is open!

- Before opening the heating system, disconnect the heating system from the power supply by means of the emergency isolation switch or the relevant circuit breaker in the main fuse board.
- Prevent unintentional reconnection of the electricty supply.

DANGER: Risk to life from gas explosion!

- Any work on components may only be carried out by an approved contractor.

- Check the general condition of the heating system.
- Visually and functionally check the heating system.
- Check all system parts that carry fuel or water for leaks and visible corrosion.

EN 303 permits an amount of leakage from the hot gas side of the boiler.

8.3 Cleaning the boiler

DANGER: Risk of injury due to burner door falling off when opened!

- Make sure that both hinge bolts (→ Fig. 7, [1], page 18) are inserted.

CAUTION: Boiler damage due to not using the appropriate cleaning equipment!

- Only Buderus cleaning equipment may be used for cleaning.

For wet-cleaning, we recommend high-pressure cleaning equipment.

- Do not pour cleaning residues through the neutralisation device.
- Do not block up the condensate drain (→ Fig. 32, page 42) when cleaning.

- Remove upper and lower front panels.
- Remove the front thermal insulation.
- Undo the door bolts and open the burner door.

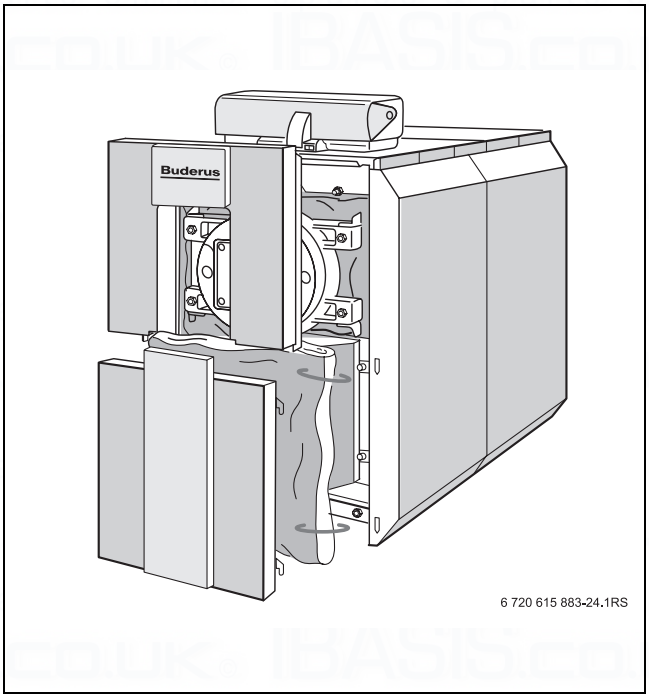

Fig. 29 Removing the front panel and thermal insulation

- Loosen nuts from the clamping angle, swivel the clamping angle away and remove the return bonnet.
- Clean the combustion chamber and the heating surfaces.

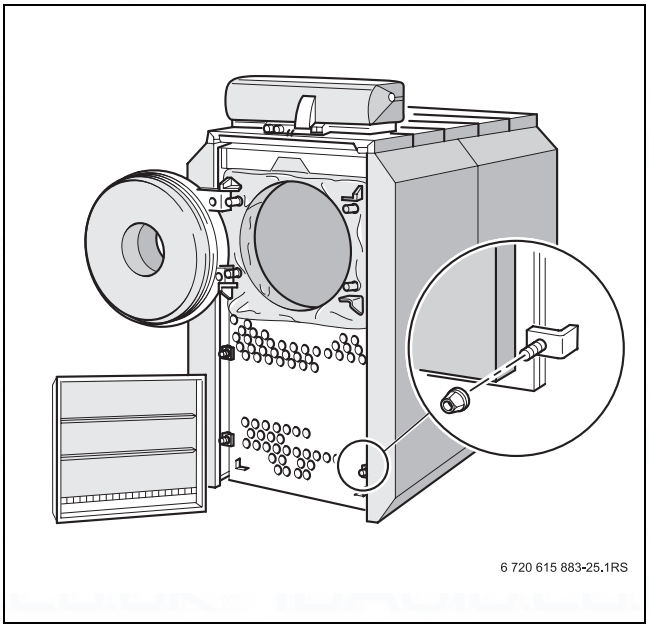

Fig. 30 Removing the return hood and opening the burner door

If you do not push all the bristle part of cleaning brush right through the secondary heating pipe, you will find it very difficult to remove the brush from the pipe.

- Push the bristle part of the cleaning brush right through the secondary heating pipe until the bristles emerge at the other end of the pipe.

- Feed brushes through the secondary heating pipes.
- Use a vacuum cleaner if necessary to remove any cleaning residues.

CAUTION: System damage due to faulty seals!

- Check the seals around the burner door and return bonnet, replacing if necessary.

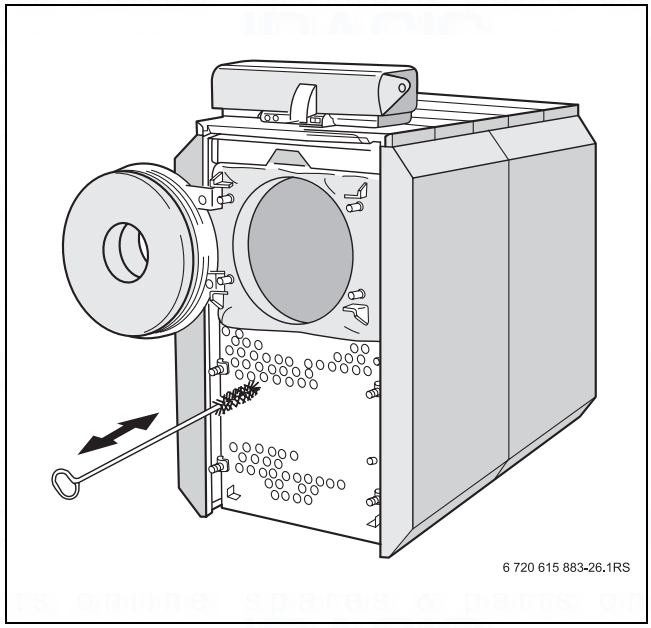

Fig. 31 Feed brushes through the secondary heating pipes

If spray cleaning, follow the operating instructions for the relevant cleaning equipment!

Spray must not enter the control unit!

- Bolt burner door shut.
- Put the return bonnet in place and seal it tight with the clamping angle (→ Fig. 30, page 40). Pay attention to fitted position.
- Fasten front lagging with tension springs.
- Fit lower and upper front panels of the boiler (→ Fig. 29, page 40).
- Put system back into operation.

8.4 Cleaning the flue gas collector

To be able to remove combustion residues from the flue gas collector, the clean-out cover has to be removed. This is located on the rear panel.

DANGER: Risk to life from poisoning!
Siphons which are not filled with water, or open connections, can cause a risk to life from escaping flue gas.

- Fill the siphon with water.
- Ensure that the siphon and flue gas connections are sealed.
- Ensure that the sealing disc with gasket is seated in the locking cap.

- Undo the wing nuts on the cleaning cover [1] and remove the cleaning cover.
- Remove all loose combustion residues from the flue gas collector.
- Refit the clean-out cover in the reverse order of removal.
- Check whether the siphon is filled with water.

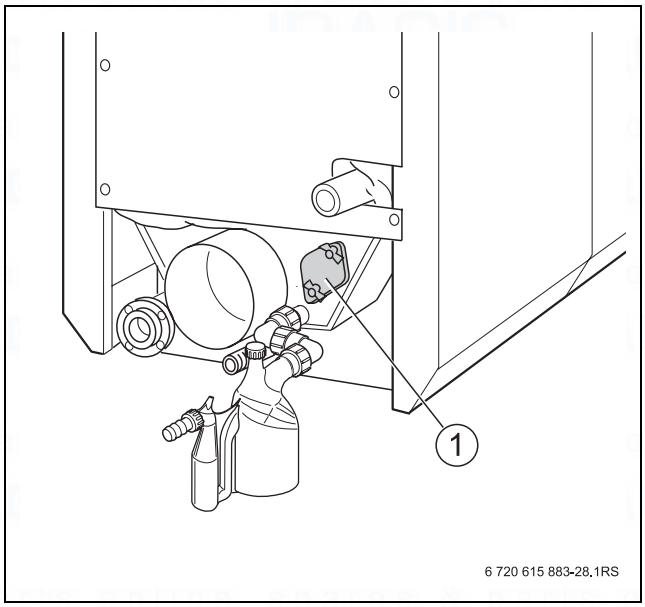

Fig. 32 Inspection aperture flue gas collector

1 Cleaning access covers

8.5 Checking the heating system water pressure

A distinction is generally made between open vented and sealed unvented heating systems. In practice, open heating systems are seldom installed. We will therefore be using sealed systems to demonstrate how you can check the water pressure.

Open heating systems

For open heating systems, the hydrometer needle [1] should be within the red band [3].

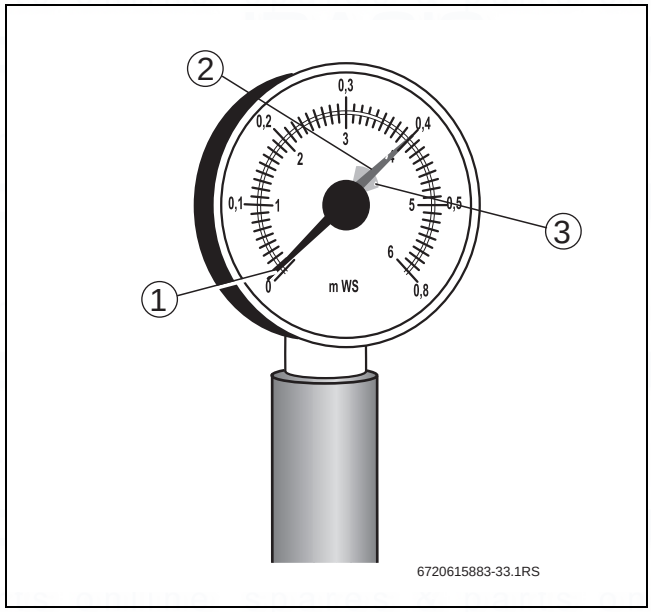

Fig. 33 Hydrometer for open unvented heating systems

1 Hydrometer needle
2 Green needle
3 Red field

Sealed heating systems

In sealed systems, the pressure gauge needle [2] must lie within the green field [3]. The red pressure gauge needle [1] must be set to the required heating system pressure.

Generate the operating pressure required for the heating system.

- Set the manometer pointer accordingly.
- Check the heating system water pressure.

CAUTION: System damage due to frequent topping up!
The heating system may be damaged, depending on water quality, by corrosion or scaling if you frequently need to top-up your system with water.

- Ensure that the heating system is vented correctly.
- Check the heating system for leaks and proper operation of the expansion vessel.
- Observe the requirements in respect of water quality.

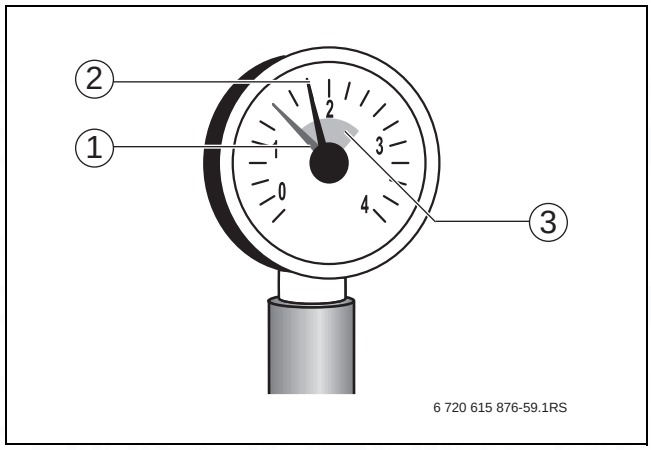

Fig. 34 Pressure gauge for sealed unvented heating systems

1 Red needle
2 Pressure gauge needle
3 Green band

8.6 Inspection and maintenance reports

The inspection and maintenance reports provide an overview of the required inspection and maintenance work.

▶ Initial and date the completed inspection work.

Inspection work		Page (individual steps)	Comments
1.	Check the general condition of the heating system.		
2.	Visual and function check of the heating system.		
3.	Check the components in contact with fuel and water throughout the system for the following: • Tightness/leaks • visible signs of corrosion • Signs of ageing		
4.	Check the combustion chamber and the heating surface for contamination; shut down the system for this step.	page 39	
5.	Check the burner.	→ burner documentation	
6.	Check the flue for function and safety.	→ burner documentation	
7.	Check the water pressure of the heating system and pre-charge pressure of the diaphragm expansion vessel.	page 43	
8.	If necessary, check the function of the DHW cylinder and the magnesium anode.	→ DHW cylinder documentation	
9.	Check the control unit settings.	→ control unit documentation	
10.	Final inspection check; take measurements and document figures and test results.		
Confirm professional inspection with signature, date and company stamp			

Condition-based maintenance		Page (individual steps)	Comments
1.	Shut down the heating system. (Disconnect your heating system from the main electrical supply, isolate main fuel shut-off, disconnect flue pipe from burner.)	page 38	
2.	Cleaning hot gas flues (heating surfaces).	page 40	
3.	Clean the combustion chamber. Clean the condensate outlet. Cleaning the flue collector.	page 40	
4.	Check and, if required, replace gaskets/packing cord on the burner door.		
5.	Start up the heating system.	page 34	
6.	Final maintenance check; take measurements and document figures and test results.	→ burner documentation	
7.	Check the function and operational safety (safety equipment).		
Confirm professional maintenance with signature, date and company stamp			

Notes

spares & parts online IBASIS.CO.UK

Notes

spares & parts online IBASIS.co.uk

Bosch Thermotechnik GmbH
Sophienstrasse 30-32
D-35576 Wetzlar
www.buderus.com

C & F Quadrant Ltd.
Unit L40 Cherry Orchard Industrial Estate
Cherry Orchard, Dublin 10
Tel.: 01.6305700
Fax.: 01.6305706 / 01.6305715
www.cfquadrant.ie
E-mail: sales@cfquadrant.ie

Buderus
Cotswold Way, Warndon, Worcester WR4 9SW
Customer service: 0870 421 5933
Technical support: 0870 421 5944
Fax: 01905 753130
www.buderus-commercial.co.uk

In the UK and IE, Buderus is a brand name of
Bosch Thermotechnology Ltd.

Buderus

spares & parts online IBASIS.CO.UK