Installation and maintenance instructions

Gas-fired condensing boiler

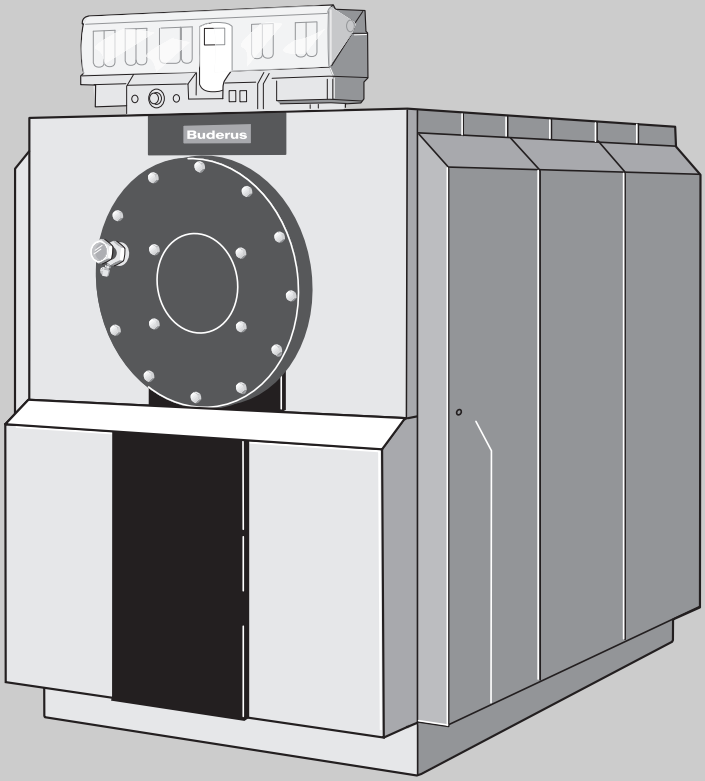

Note:
This boiler must only be operated with natural gas or liquid propane (LP)!

Logano plus SB735 Gas

For contractors

Read carefully prior to installation and maintenance.

6 720 640 216 - 01/2009 GB

Buderus

spares & parts online IBASIS.CO.UK

1 General Information . . . 4

2 Safety . . . 5

2.1 Correct use . . . 5
2.2 Standards and guidelines/directives . . . 5
2.3 Layout of these instructions . . . 6
2.4 Please observe these notes . . . 6
2.5 Tools, materials and auxiliary equipment . . . 8
2.6 Disposal . . . 8

3 Product description . . . 9

4 Specifications . . . 10

5 Standard delivery . . . 12

6 Positioning the boiler . . . 13

6.1 Recommended wall clearances . . . 13
6.2 Fitting silencing plinth . . . 14
6.3 Levelling the boiler . . . 15

7 Installation of the boiler . . . 16

7.1 Modifying burner door closure . . . 17
7.2 Changing return bonnet closure from right to left . . . 17
7.3 Fitting the low water indicator . . . 18
7.4 Installing the thermal insulation . . . 19
7.5 Fitting the tie-bars . . . 22
7.6 Fitting plinth panels . . . 26
7.7 Fitting the side panels . . . 27
7.8 Fitting the front boiler cover . . . 28

8 Making heating system, flue gas and water connections . . . 29

8.1 Fitting the flue pipe sealing collar (accessory) . . . 29
8.2 Fitting the flue gas temperature sensor (accessory) . . . 29
8.3 Information regarding the connection of the boiler to the pipework . . . 30
8.4 CH return . . . 30
8.5 CH flow . . . 31
8.6 Instructions for safety line flow . . . 31
8.7 Filling the boiler and checking connections for leaks . . . 31
8.8 Instructions for flue gas systems . . . 31
8.9 Instructions for neutralisation device (accessory ordered separately) . . . 32

9 Fitting control unit and sensor well . . . 33

10 Installing the boiler casing . . . 36
10.1 Fitting boiler cover sections . . . 36
10.2 Fitting data plate . . . 37
10.3 Fitting the rear panel sections . . . 38
11 Fitting burner (accessory) . . . 39
12 Commissioning the heating system . . . 40
12.1 Filling the heating system . . . 41
12.2 Flushing the heating system . . . 41
12.3 Preparing the heating system for operation . . . 41
12.4 Commissioning the control unit and the burner . . . 41
12.5 Commissioning report . . . 42
13 Shutting down the heating system . . . 43
13.1 Shutting down the heating system via the control unit . . . 43
13.2 Shutting down the heating system in emergencies . . . 43
14 Servicing . . . 44
14.1 General notes . . . 44
14.2 Preparing the boiler for inspection and maintenance . . . 44
14.3 Preparing the boiler for cleaning with brushes . . . 45
14.4 Clean the boiler with cleaning brushes . . . 46
14.5 Wet-cleaning the boiler . . . 47
14.6 Checking the heating system water pressure . . . 48
14.7 Inspection and maintenance reports . . . 49
14.8 Maintenance on neutralisation device . . . 51
15 Correcting burner faults . . . 52
16 Keyword index . . . 53

1 General Information

About these instructions

These installation and servicing instructions contain important information for the safe and appropriate installation, commissioning and servicing of the Logano plus SB735 Gas condensing boiler.

These installation and maintenance instructions are designed for specialists who – through their vocational training and experience – are knowledgeable in handling heating systems and gas installations.

This document also refers to accessories which may be used in conjunction with the Logano plus SB735 Gas installation. When installing accessories, observe the associated installation instructions.

USER INFORMATION

Observe all standards and guidelines applicable to the installation and operation of this heating system in your country.

Please observe the information on the boiler rating plate. These are definitive and must be observed.

Please contact Buderus if using biogas or special gases.

Operating conditions and time constants		
Maximum flow temperature	**°C**	120
Maximum operating pressure	**bar**	5.5
Control thermostat	**s**	40
Monitor/Limiter	**s**	40

Tab. 1 Operating conditions and time constants

Permitted gas types

The Logano plus SB735 gas-fired condensing boiler can be operated with the following gas types:

- Natural gas and liquid propane (LP) according to DVGW (German certification body) worksheet G260.
- Natural gases and liquid propane (LP) supplied by public gas utility (Austria, Switzerland).

Only use burners that are compatible with these gas types. Observe the specifications of the burner supplier.

2 Safety

For your own safety, observe these safety instructions.

2.1 Correct use

The Logano plus SB735 Gas gas-fired condensing boiler has been designed for wet heating systems in e.g. multiple dwelling units or in industrial applications. Any gas burner type-tested to EN 676 can be used if its operating range matches the boiler specifications.

For boilers > 300 kW, install a low water indicator, following the manufacturer's technical documentation for installation and operation!

USER INFORMATION

for Germany.

To comply with DIN EN 12828, boilers rated at greater than 300 kW must be equipped with a low water indicator.

- For installation and operation, refer to the technical documents provided by the manufacturer.

USER INFORMATION

for Poland.

To comply with PN-91/B-2414 (p2.5), boilers rated greater than 100 kW must be equipped with a low water indicator.

If the WMS connection provided is not being used for the installation of a SYR 932.1 low water indicator (Buderus accessory), the connection must be plugged (➔ Chapter 7.3 "Fitting the low water indicator", page 18).

The Logamatic control system is used for this boiler.

2.2 Standards and guidelines/directives

The design and operation of this product conform to European Directives and the supplementary national requirements.
Its conformity is demonstrated by the CE designation.

You can view the Declaration of Conformity on the internet at www.buderus.de/konfo or request a copy from your local Buderus sales office.

2.3 Layout of these instructions

Two levels of danger are identified and signified by the following terms:

WARNING!	**RISK TO LIFE** ● Identifies possible risks associated with a product that might lead to serious injury or death if appropriate care is not taken.

CAUTION!	**RISK OF INJURY/ SYSTEM DAMAGE** Indicates a potentially dangerous situation which could lead to minor or moderately serious injuries or to material losses.

Further symbols identifying dangers and user notes:

WARNING!	**RISK TO LIFE** from electric shock.

USER INFORMATION

User tips for the optimum utilisation and setting of the appliance plus useful information.

➔ Cross-references

Cross-references to a specific point in the document or to other documents are marked with an arrow ➔.

2.4 Please observe these notes

Observe the following during installation and operation:

- Local Building Regulations concerning boiler room installations.
- Local Building Regulations regarding air supply and extraction equipment as well as connection to a flue.
- Latest edition of the IEE Wiring reulations governing electrical connection to the mains power supply.
- The technical rules of the gas supply utility regarding the connection of the gas burner to the local mains gas supply.
- Regulations and standards regarding the safety equipment level of water-filled heating systems.
- Installation instructions for heating engineers.
- In Belgium, the standards NBN D 30-003, NBN D 51-004 and addenda must be observed.
- In the Netherlands, technical rules, building regulations and other legal requirements (e.g. NEN 1078 (GAVO), NEN 3028 and NEN 1010) must be observed when installing and operating the system.
- In Austria, local building regulations, as well as ÖVGW guideline G1/G2 (ÖVGW-TR gas/ LPG) must be observed during installation. The requirements of the national directive Article 15a B-VG, regarding emissions and efficiency, are fulfilled.
- Different conditions apply for Switzerland:
  By carrying out measurements at the installation location, it must be checked whether the LRV maximum permitted limits concerning CO and NOx are being observed. The boilers have been tested according to VKF fire safety regulations. During installation, observe the guidelines for installing and operating gas-fired boilers G3 d/f, the gas guidelines G1 SVGW, and local fire safety regulations in force within the canton.
  The output figures shown in the tab. "Specifications" are nominal output figures.
  In practice, these values will sometimes not be reached within the specified output range in order to adhere to LRV regulations.

WARNING!

RISK TO LIFE

from the explosion of flammable gases!
There is a risk of explosion if you can smell gas!

- No open flames. Do not smoke!
  Do not use lighters!
- Avoid formation of sparks.
  Do not activate any electrical switches, including telephones, plugs or electrical bells.
- Close the main gas shut-off valve.
- Open windows and doors!
- Do keep people away from the affected area.
- Do call your gas supplier from outside the building.
- If you hear gas escaping, immediately leave the building, prevent others from entering and notify the police and fire brigade from outside the building.

WARNING!

RISK TO LIFE

through poisoning!
An insufficient supply of air can result in dangerous escape of flue gas.

- Prevent air inlet and outlet vents from becoming blocked or restricted.
- Do not operate the boiler until any ventilation defects have been rectified.
- Inform the system user in writing of the fault and its associated dangers.

WARNING!

RISK TO LIFE

from electric shock when the appliance is open!

- Isolate the heating system from the mains electricity supply before opening the appliance. Use either an emergency isolation switch or the relevant circuit breaker.
- Prevent unintentional reconnection of the electricty supply.

WARNING!

RISK OF FIRE

through flammable materials or liquids!

- Never store flammable materials or liquids in the immediate vicinity of the boiler.

CAUTION!

SYSTEM DAMAGE

through frost.
The heating system can freeze up, if the control unit has been switched off.

- Protect your system against frost damage where sub-zero temperatures below are expected.
- If for some reason the control unit is to be switched off, drain the system water from the boiler, DHW cylinder and all heating system pipework.

SYSTEM DAMAGE

through unsatisfactory cleaning and maintenance.

- Carry out maintenance and cleaning procedures annually. In the course of this work, check the entire heating system (including neutralisation device) for correct function.
- Have faults corrected as quickly as possible in order to prevent system damage and to help protect your heating system.

2.5 Tools, materials and auxiliary equipment

For the installation and maintenance of the boiler, you will need the standard tools used in the area of heating engineering and also for gas and water installations.

2.6 Disposal

- Dispose of the boiler and control unit packaging in an environmentally responsible manner.
- Dispose of all heating system components that have to be replaced at an authorised disposal site.

3 Product description

You must equip the Logano plus SB735 Gas gas-fired condensing boiler with a suitable burner.

CAUTION!

SYSTEM DAMAGE

through incorrect burner!

- Only use burners that meet the technical requirements of the Logano plus SB735 Gas gas-fired condensing boiler.

The main components of the Logano plus SB735 Gas gas-fired condensing boiler (Fig. 1) are:

– Boiler block in conjunction with a burner
  The boiler block transfers the heat generated by the burner to the heating water.

– Boiler casing [2], thermal insulation [4], burner door casing – (Fig. 2, [2]) and return bonnet cladding (Fig. 2, [1])
  The boiler casing, lagging, burner door casing and return bonnet casing prevent energy loss.

– Control unit (accessory – Fig. 1, [1])
  The control device is designed to monitor and control all electrical components of the gas-fired condensing boiler.

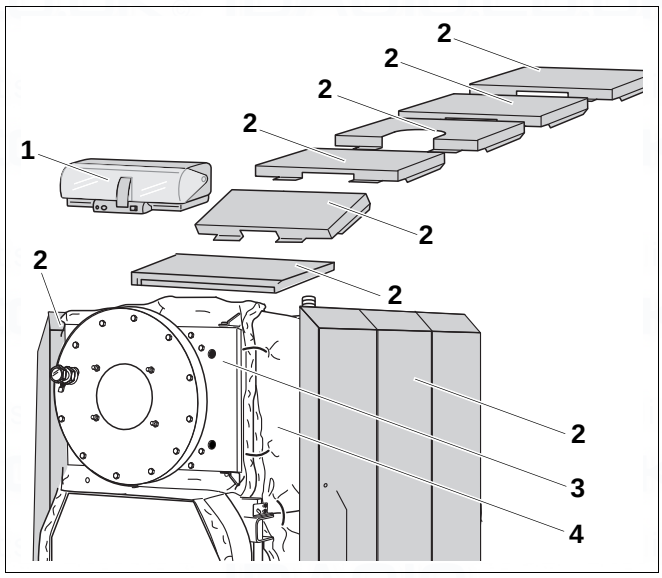

Fig. 1 Logano plus SB735 Gas condensing boiler

1 Boiler control unit (accessory)

2 Boiler casing

3 Burner door

4 Thermal insulation

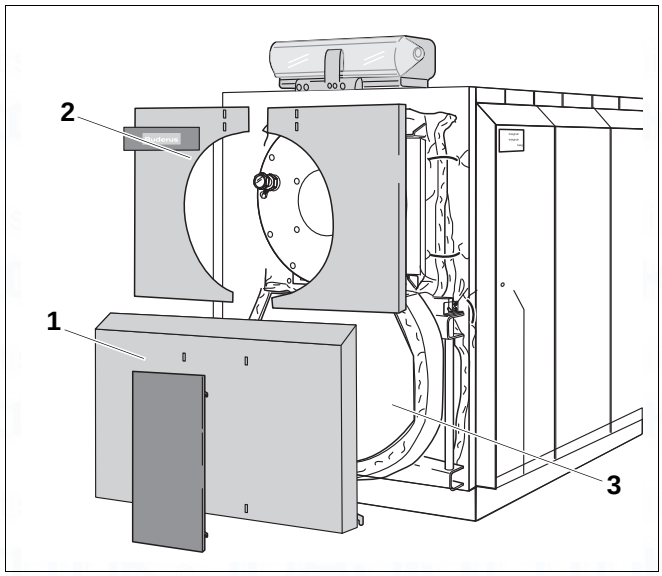

Fig. 2 Logano plus SB735 Gas condensing boiler

1 Return bonnet casing

2 Burner door casing

3 Return bonnet

4 Specifications

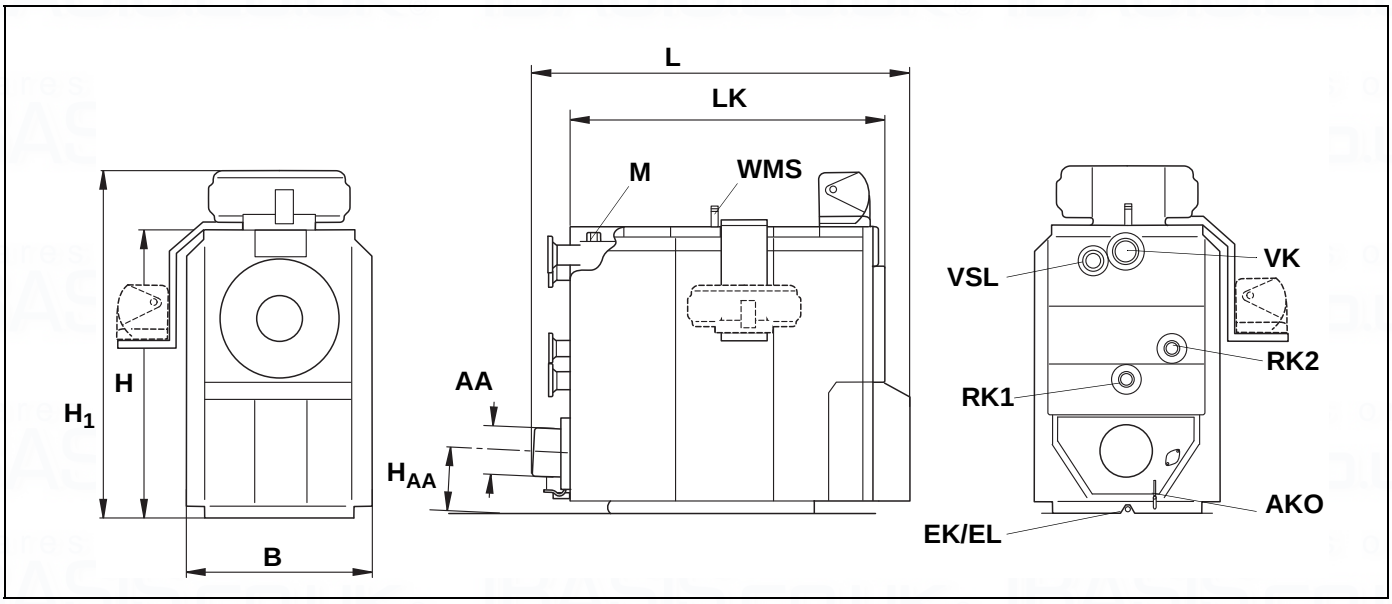

Fig. 3 Dimensions and connections

Key to Fig. 3

VK	=	Boiler flow	VSL	=	Flow safety line
RK1	=	Boiler return	AKO	=	Condensate drain
RK2	=	Boiler return	EK	=	Cold water inlet
H1	=	Control system Logamatic 4200/4300=H+240	EL	=	Drain
WMS	=	Low water indicator	M	=	Test point (sensor well)

Boiler size			**790**	**970**	**1200**
CO_2 content		%	10		
Water capacity		l	1870	2500	2530
Gas capacity		l	1050	1204	1410
Free draught		Pa	Varies depending on burner (50)[1]		
Hot gas resistance		mbar	4.96	5.66	6.38
Permissible flow temperature[2]		°C	120		
Permissible operating pressure		bar	5.5		
CE designation, product ID no.			CE-0085 AU 0452		
Length	L	mm	2702	3120	3118
LK = Length of Boiler Block	L_K	mm	2321	2748	2733
Height	H	mm	2063	2063	2103***
Width	B	mm	1370	1370	1370
Inner diameter of flue gas outlet	AA	mm	353	353	353
HAA = Flue Outlet Height	H_{AA}	mm	480	484	484***
Weight approx.		kg	1730	2170	2204
Boiler flow	VK	DN*	100	125	125
1. LT boiler return	RK_1	DN*	100	125	125
2. HT boiler return	RK_2	DN*	80	100	100
Flow safety line	VSL	DN**	65	65	65
Drain	EK/EL	R	1	1½	1½

System temperature 50/30 °C					
Rated output	Full load	kW	790	970	1200
	Partial load	kW	241	296	370
Combustion heat output	Full load	kW	732	898	1132
	Partial load	kW	220	269	340
Flue gas temp.	Full load	°C	39	37	38
	Partial load	°C	27	27	31
Flue gas mass flow rate	Full load	kg/s	0.322	0.395	0.489
	Partial load	kg/s	0.122	0.150	0.186
System temperature 80/60 °C					
Rated output	Full load	kW	715	878	1100
Combustion heat output	Full load	kW	732	898	1132
	Partial load	kW	220	269	340
Flue gas temp.	Full load	°C	69	68	67
	Partial load	°C	36	37	38
Flue gas mass flow rate	Full load	kg/s	0.320	0.394	0.487
	Partial load	kg/s	0.128	0.158	0.195

Tab. 2 Specification

* According to EN 1092 PN 6.
** According to EN 1092 PN 16.
*** With silencing plinth.

1. *Recommended delivery pressure is shown in brackets.*

2. *Safety limit (high limit safety cut-out). Maximum possible flow temperature = safety limit (STB) – 18 K.*
Example: Safety limit (STB):100 °C, max. possible flow temperature = 100 – 18 = 82 °C.

5 Standard delivery

- Packaging for perfect condition.
- Check the delivery for completeness.

Logano plus SB735 Gas

Component	Quantity	Packaging
Boiler body	1	screwed onto transport pallets
Connecting pipe for low water indicator	1	located in combustion chamber
Plastic siphon	1	
Isolation for blast tube	1	
Technical documentation	1	attached to boiler block
Boiler casing with accessories	1	packaged in 2 wooden frames and carton; the installation material is located in Pack A
Thermal insulation	1	2x foil packaging
Silencing plinth (boiler rating 1200 kW)	1	enclosed with boiler
Control unit with wiring diagram and operating instructions for electronic boiler and heating circuit control	1	1 carton
Neutralisation device (accessory – order separately)	1	1 carton
Bolt flange for special version[1]	1	in accessories dispatch unit

Tab. 3 Logano plus SB735 Gas standard delivery

1. *With customised version only*

USER INFORMATION

It is possible that some of the standard accessory parts will not be necessary for some boiler types.

6 Positioning the boiler

In this chapter you will learn how to properly position the Logano plus SB735 Gas.

CAUTION!

SYSTEM DAMAGE

through frost.

- Set up the heating system in a room safe from the risk of frost.

6.1 Recommended wall clearances

Observe the specified wall clearances (➔ see examples in Fig. 4 and Tab. 4 on page 13) when creating a plinth. The plinth must be 5 – 10 cm high, and perfectly level and horizontal. The front edge of the boiler should be flush with the edge of the plinth.

Details regarding the length L_K can be found in Chapter 4 "Specifications", page 10.
Align the boiler block in such a way that it tilts backwards slightly.

Boiler size	L in mm	BK in mm	A in mm [1]
790	2702	1110	2500 (1100)
970	3120	1110	2500 (1100)
1200	3118	1170	2500 (1100)
Remarks			
When installing your boiler maintain the recommended minimum dimensions (shown in brackets) (➔ see example in Fig. 4). Select the recommended clearances between wall and boiler to enable easy access for installation, maintenance and service work. Allow extra space if a flue gas silencer is to be installed. If you wish to fix the control unit to the side of the boiler using the device holder (accessory), refer to the installation manual (accessory) for information regarding the clearances required.			

Tab. 4 Specified wall clearances

1 Take the dimension L_{BR} (length of burner) in relation to clearance A into account.

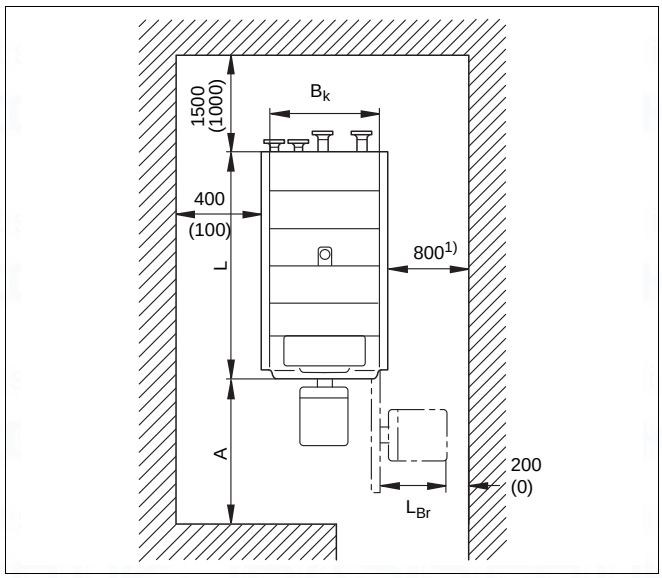

Fig. 4 Boiler room with boiler, dimensions in mm

1) When using the side control unit holder.

USER INFORMATION

For boiler rating 1200 kW, you must use the silencing plinth provided.

6.2 Fitting silencing plinth

- Lay each longer section of lengthwise bedding [4] to the front and the shorter section [3] to the back underneath the U-shaped profile rail [2].
- Lay both rails of the silencing plinth on the floor of the boiler installation location, observing the measurements given in Tab. 5 below.

USER INFORMATION

The base on which the silencing plinth is placed must be smoothed out ±1 mm per 1 m and tilted backwards slightly. This ensures an even load distribution on the lengthwise bedding and good ventilation for the boiler.

- Place the boiler on the silencing plinth and make sure it is aligned.
  The silencing plinth must be flush with the rear panel of the boiler.
  The stop plates [1] must touch the U-shaped rail on the boiler.

Boiler series	Boiler size [kW]	Length F [mm]	Clearance C [mm]
SB735 Gas	1200 [1]	2240	1170
	970 [2]	2240	1110
	790 [2]	2120	1120

Tab. 5 Silencing plinth measurements

1. *Standard delivery*
2. *Accessories*

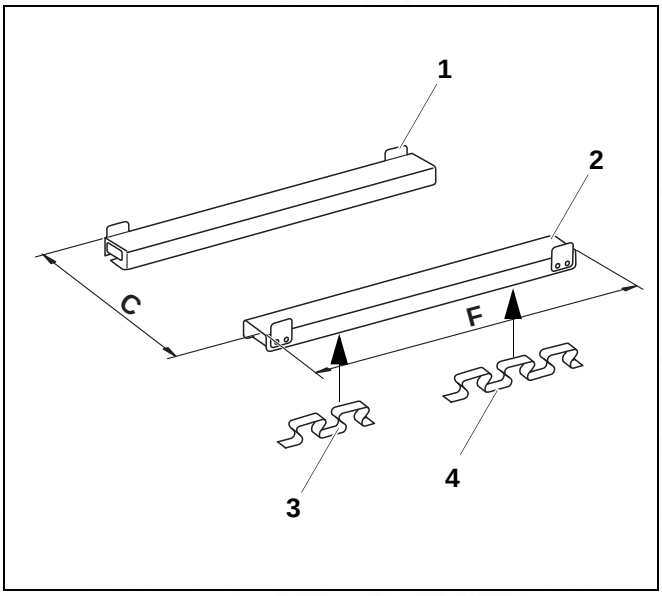

Fig. 5 Silencing plinth

1 Stop plate

2 U-shaped profile rail

3 Shorter lengthwise bedding

4 Longer lengthwise bedding

6.3 Levelling the boiler

Level the boiler (Fig. 6) vertically and horizontally to prevent air pockets being created inside the boiler.

USER INFORMATION

Use metal shims to level the boiler.

- Level the boiler horizontally and vertically as shown in Fig. 6 with the help of a spirit level [1].

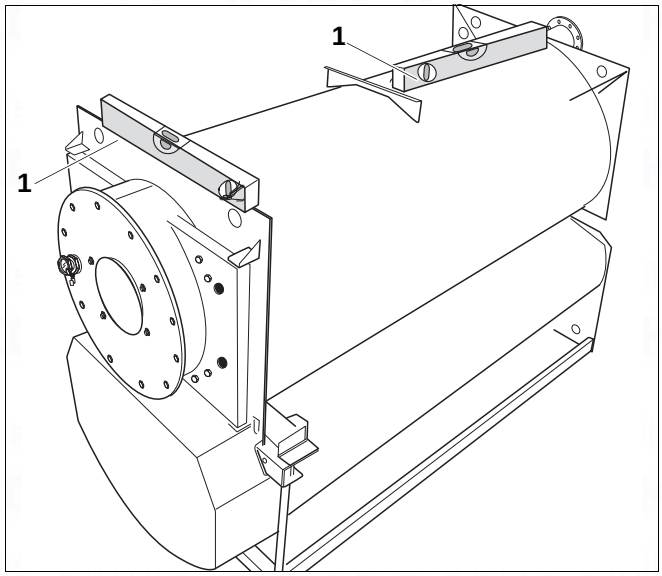

Fig. 6 Levelling the boiler

1 Spirit level

7 Installation of the boiler

This chapter explains how to correctly install the boiler.

USER INFORMATION

- To avoid damage to the stainless steel combustion chamber when welding or grinding, ensure that the burner door is firmly shut (except when fitting the front lagging mat).

Install in the following order:

1. Thermal insulation A/B
2. Casing Pack A
3. Casing Pack B
4. Casing Pack C

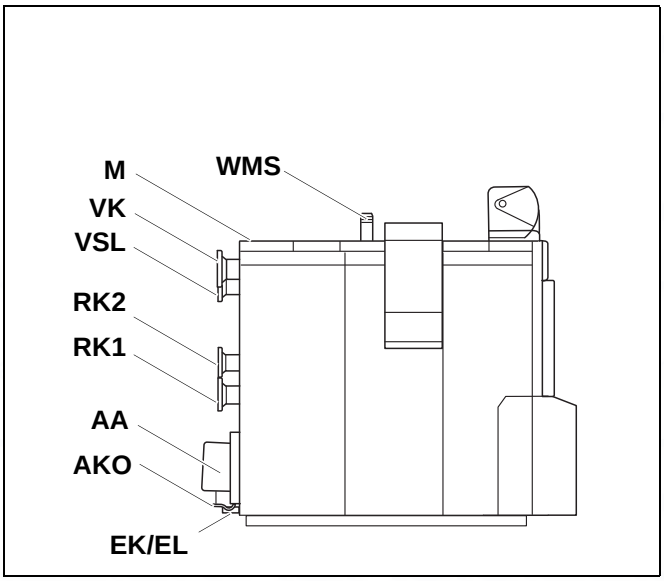

Fig. 7 Connections

WMS = Low water indicator
M = Measuring point (sensor well)
VK = Boiler flow
VSL = Flow safety line
RK2 = HT boiler Return
RK1 = LT boiler Return
AA = Flue gas outlet
AKO = Condensate drain
EK = Cold water inlet
EL = Drain

7.1 Modifying burner door closure

The door stop can be moved from the right-hand side to the left.

CAUTION!

RISK OF INJURY

from falling parts!

- Only change the door stop when the burner door is screwed shut.
- Secure the burner door against falling off.
- Loosen the screws very slightly if necessary, but do not unscrew completely.

USER INFORMATION

- The cut-outs [2] on the burner door (2 on the left and 2 on the right) can be used for hooking in a crane or pulley, e.g. when removing the door completely.

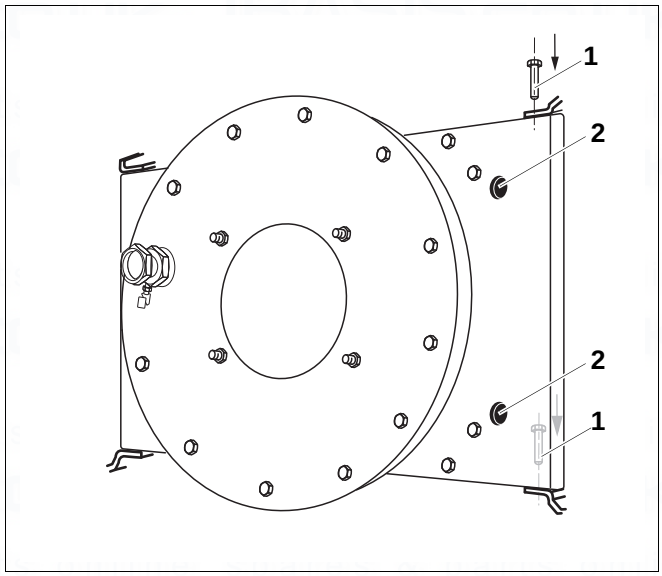

Fig. 8 Burner door

1 Hinge pin

2 Cut-outs

- Push the hinge bolts [1] up and out.
- Re-insert the washer and two hinge bolts on the opposite side (Fig. 8).
  Remember the washer!

7.2 Changing return bonnet closure from right to left

CAUTION!

RISK OF INJURY

from falling parts!

- Only change the return bonnet closure when the return bonnet is screwed shut.

- Slightly loosen fixing screws [1] on the return bonnet [2] but **do not unscrew completely**.
- Knock out hinge bolt [4] upwards.
- Raise return bonnet [2] slightly on the right using a tyre lever, and remove washer [3] on the right.
- Raise return bonnet slightly on the left using a tyre lever and insert washers [3] on the left between hinge angled clip and return bonnet hinge.
- Knock in left-hand hinge bolt [4].
- Tighten fixing screws [1] on the return bonnet [2].
- Check return bonnet [2] for leak tightness.

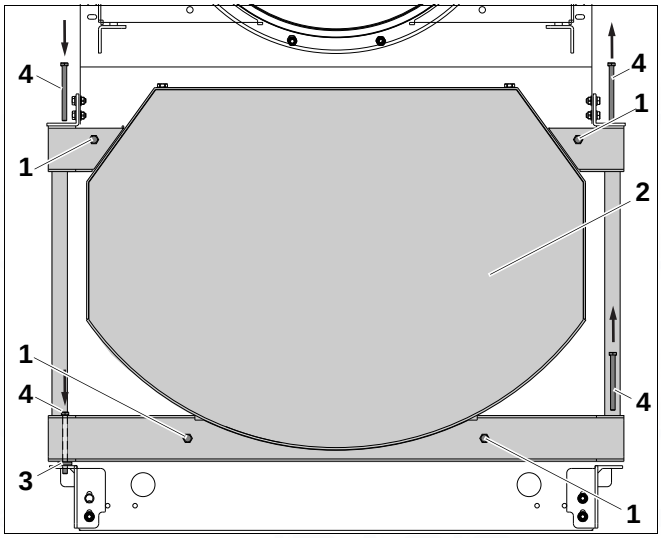

Fig. 9 Changing return bonnet closure from right to left

1 Fixing screw

2 Return bonnet

3 Washer

4 Hinge pin

7.3 Fitting the low water indicator

The Logano plus SB735 Gas gas-fired condensing boiler is suitable for gas pressure-jet burners tested to EN 267 and EN 676.

USER INFORMATION

for Germany.

To comply with DIN EN 12828, boilers rated at greater than 300 kW must be equipped with a low water indicator.

- Consult the installation and operation manuals provided by the manufacturer.

USER INFORMATION

for Poland.

- To comply with PN-91/B-2414 (p2.5), boilers rated greater than 100 kW must be equipped with a low water indicator.

If you are not going to connect a low water indicator to the connection, then you must close off the low water indicator connection with a dummy plug.

- Attach low water indicator [1] to its connection.

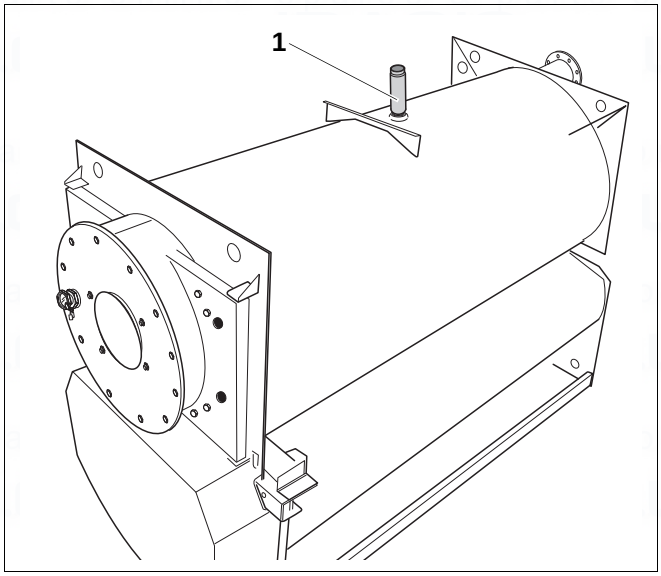

Fig. 10 Fitting the low water indicator

1 Low water indicator

7.4 Installing the thermal insulation

USER INFORMATION

- Make sure that the textile fabric on the lagging mats is on the outside.

- Lay lagging mats for the boiler block in such a way that the cut-outs lie over the connecting plates [1].

USER INFORMATION

- For boiler rating 790 kW, make sure that the narrow lagging piece with the cut-out for drainage is fitted to the back.

USER INFORMATION

- Pay attention to the cut-outs for the low water indicator and the connecting plates (Fig. 13, [4] + [5], page 21)!

- Lay the front lagging with the cut-out over the connection plate holder.
- Push the lagging through under the boiler (Fig. 11).
- Lay side lagging sections around the boiler block so that they overlap, and fasten using 8 clips.
- Unscrew 4 hexagon bolts [1] on the right-hand side of the burner door and 4 hexagon bolts on the left.

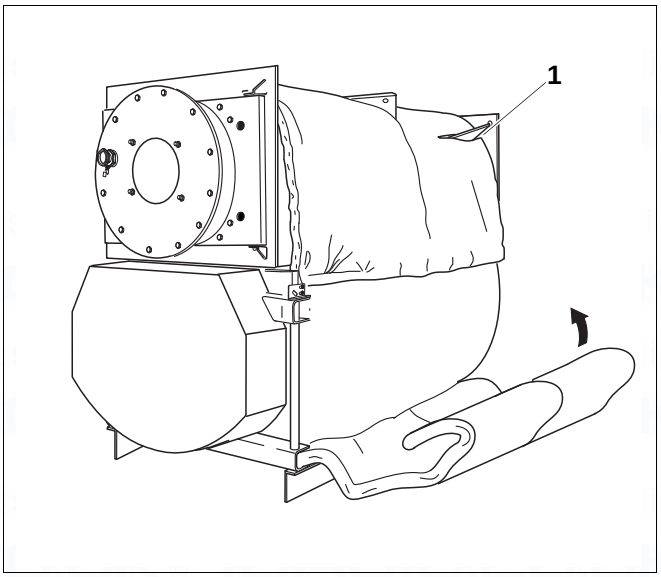

Fig. 11 Thermal insulation

1 Connecting plate

CAUTION!

RISK OF INJURY

from falling parts!

- Ensure that there are hinge bolts [2] on the burner door before you open the door.

USER INFORMATION

- The cut-outs [3] on the burner door (2 on the left and 2 on the right) can be used for hooking in a crane or pulley, e.g. when removing the door completely.

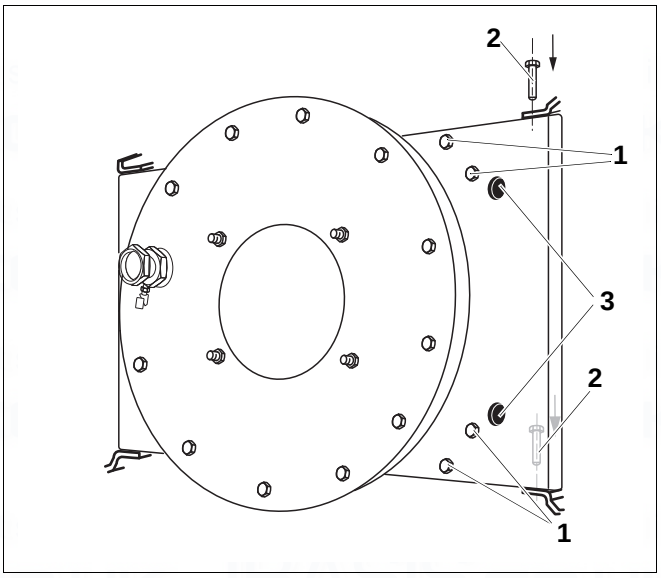

Fig. 12 Screws for opening the boiler door

1 Hexagon bolts

2 Hinge pin

3 Cut-outs

- Open burner door [2].
- Lay burner door lagging, with round cut-out [3] and the wide edge facing upwards, against the boiler block front panel (wide edge upwards), and using 4 clips (2 left, 2 right), fasten to the lagging wrapped round the boiler (Fig. 14, [3]).

USER INFORMATION

Ensure that the wide edge of the burner door lagging is facing upwards.

- Close burner door and screw shut with 8 hexagon bolts.
- Lay strip of lagging material [1] with the covering facing upwards on the return bonnet, and ensure that the cover overhang is at the front.
- Wrap lagging strip [6] for the side of the return bonnet from below around the return bonnet and fasten with 2 brackets.

USER INFORMATION

- Pay attention to the cut-outs for the hinge block!

- Lay rear panel lagging [2], paying attention to the cut-outs on the boiler rear panel, and fasten with 6 brackets [1] (3 on the left and 3 on the right) to the wrap-round lagging [3].

7.5 Fitting the tie-bars

The connection plates and accompanying installation material can be found in the dispatch unit Pack A.

USER INFORMATION

- Ensure that the folded edges on the connection plates are facing outwards (Fig. 15).

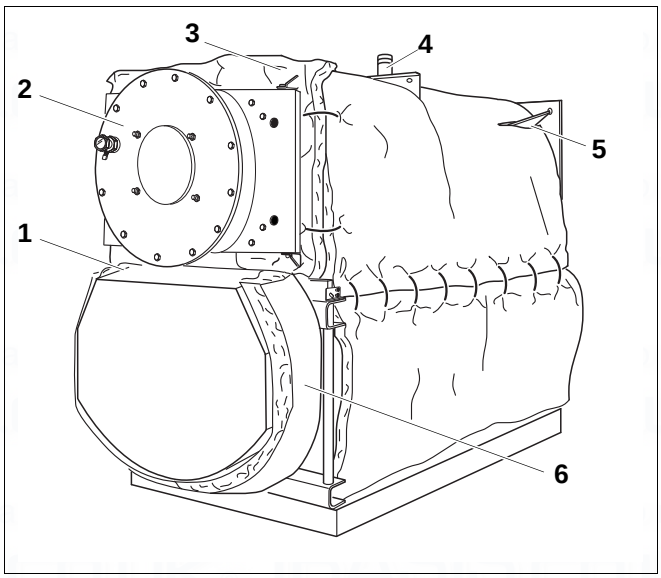

Fig. 13 Thermal insulation on the burner door and return bonnet

1 Strip of lagging material
2 Burner door
3 Burner door lagging, with round cut-out
4 Low water indicator
5 Connecting plate
6 Strip of lagging material

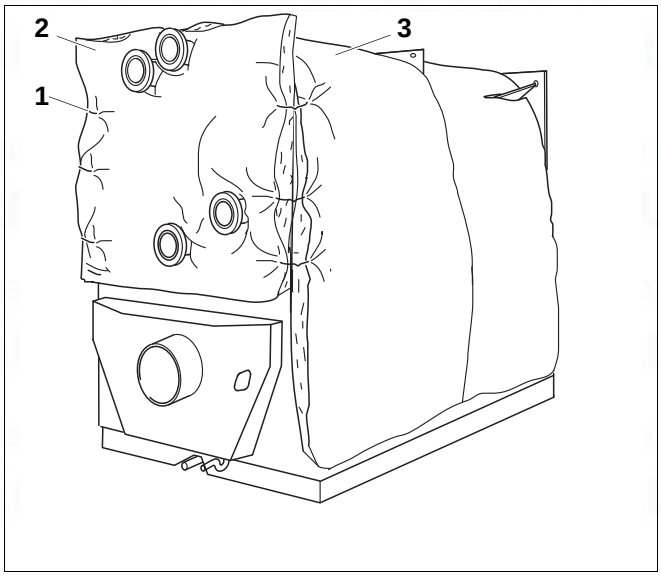

Fig. 14 Rear panel lagging

1 Brackets (x6)
2 Rear panel lagging
3 Wrap-round lagging

- Insert front connection plate (with trapeze-shaped cut-out facing downwards) into the threaded studs, with the 2 holes at the top, and screw in place with nuts (Fig. 15).
- Insert rear connection plate (with trapeze-shaped cut-out facing downwards) into the threaded studs, with the 2 holes at the top, and screw in place with nuts (Fig. 15).
- Insert lagging for burner door (Fig. 13, [3], page 21) and rear panel (Fig. 14, [2], page 21) into the upper folded edges on the front and rear connection plates.
- Lightly screw in 2 screws M8 x 80 (Fig. 16, [3], page 23) down into the middle connection plate (Fig. 16, [1], page 23).

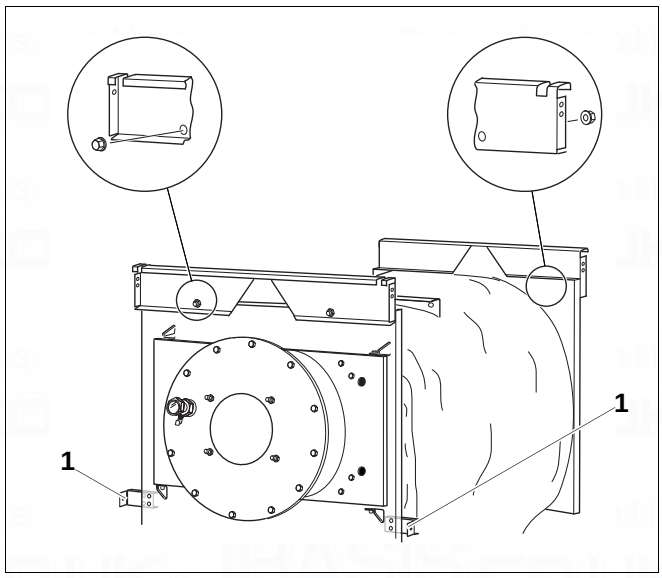

Fig. 15 Connection plates

1 Middle connection plates

- Fasten top of middle connection plate [1] to the holding tab [2] with 2 bolts, 2 washers and 2 nuts.

USER INFORMATION

- Ensure that the folded edge on the middle connection plate [1] is facing forwards.

- Loosely fasten front middle connection plate (Fig. 15, [1], page 22) on the left and right with 2 screws and 2 washers.

USER INFORMATION

- For the time being, fasten the middle connection plate (Fig. 15, [1], page 22) only loosely. Do not screw the connection plates firmly in place until they are aligned and screwed together with the front side panel.

- Press strain relief [4] on the hinge side of the burner door into the connection plate and insert burner cable.
- Screw strain relief [4] in place with 2 screws.

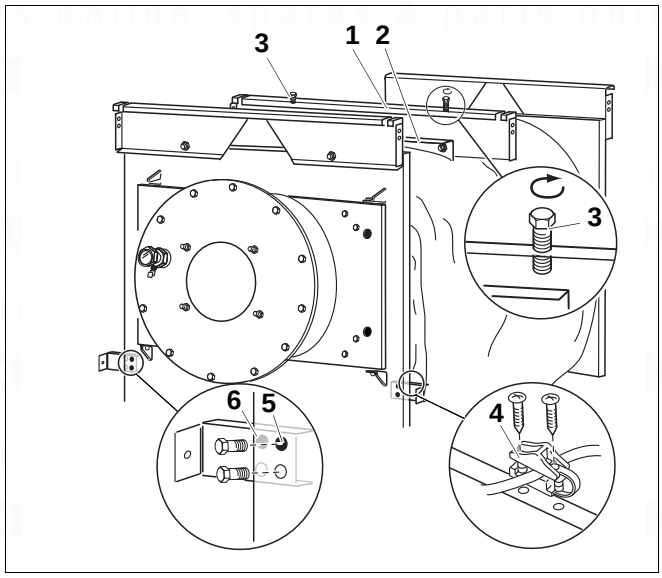

Fig. 16 Strain relief clamp

1 Middle connection plate

2 Holding tab

3 Bolt M8 × 80

4 Strain relief clamp

5 Bolt position on middle connection plate for 790 kW and 970 kW boilers.

6 Bolt position on middle connection plate for 1200 kW boiler

- The side connection plates consist of two parts, and must be preassembled. Join the two parts of the connection plate together using 2 bolts and 2 nuts (Fig. 17).

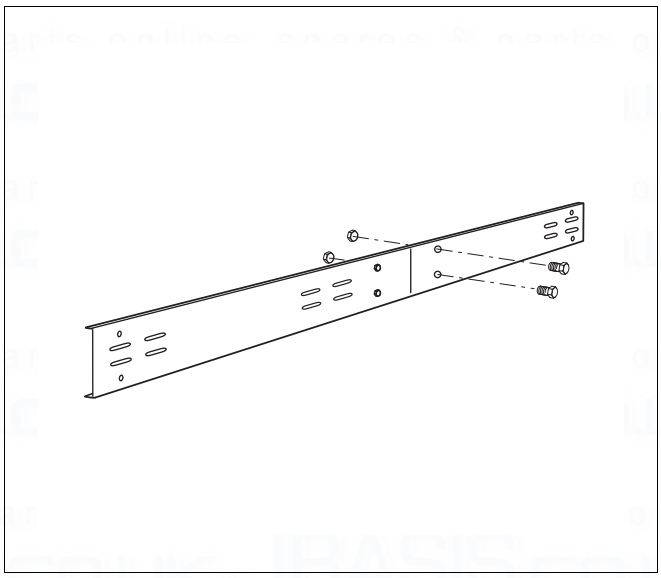

Fig. 17 Side connection plate

- Hook first side connection plate [1] with the "U" into the cut-out on each of the front, middle and back connection plates.
- The connection plate is screwed on using the hole at the front and the slotted hole at the back (1 self-tapping screw in each) (Fig. 18).
- Hook second side connection plate [3] with the "U" into the cut-out on each of the front, middle and back connection plates.
- The connection plate is screwed on using the hole at the front and the slotted hole at the back (1 self-tapping screw in each) (Fig. 18).
- Level the middle connection plate horizontally.

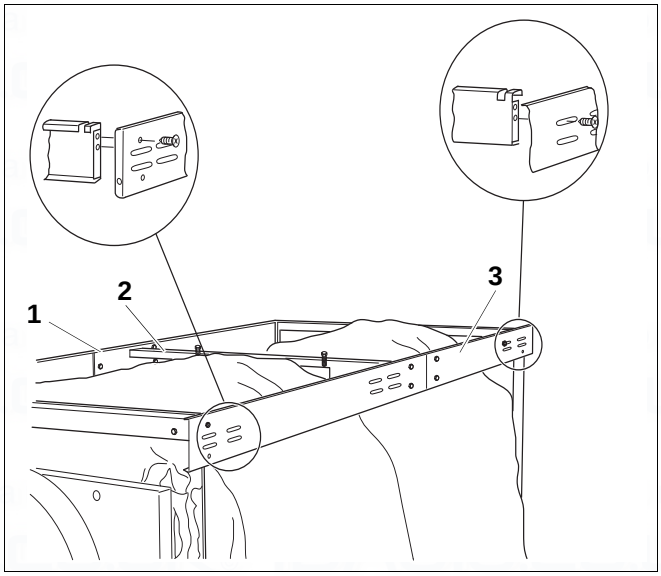

Fig. 18 Screwing connection plate together

1 Side connection plate

2 Middle connection plate

3 Side connection plate

- Measure diagonals using tape measure [1] and adjust as necessary.

USER INFORMATION

If the diagonals are of different lengths, you must correct them by adjusting the side connection plates. To do this, proceed as follows:

- Push side connection plates forwards or backwards. To do this, the front screw must be screwed in the slotted hole [2].

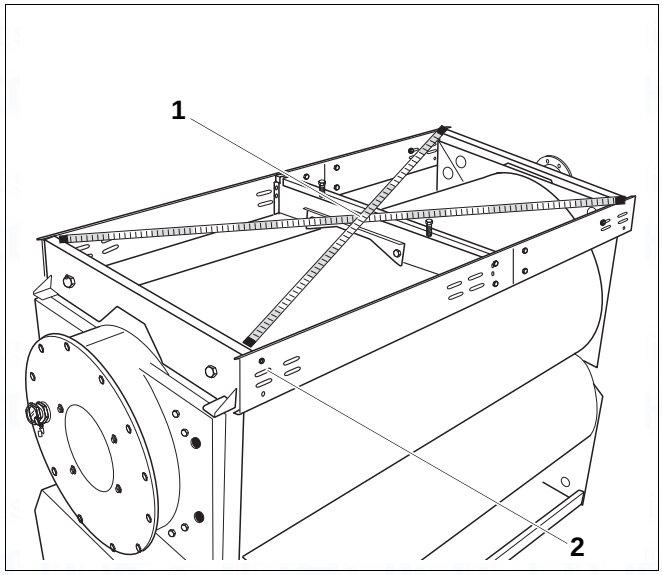

Fig. 19 Measuring diagonal

1 Tape measure

2 Slot

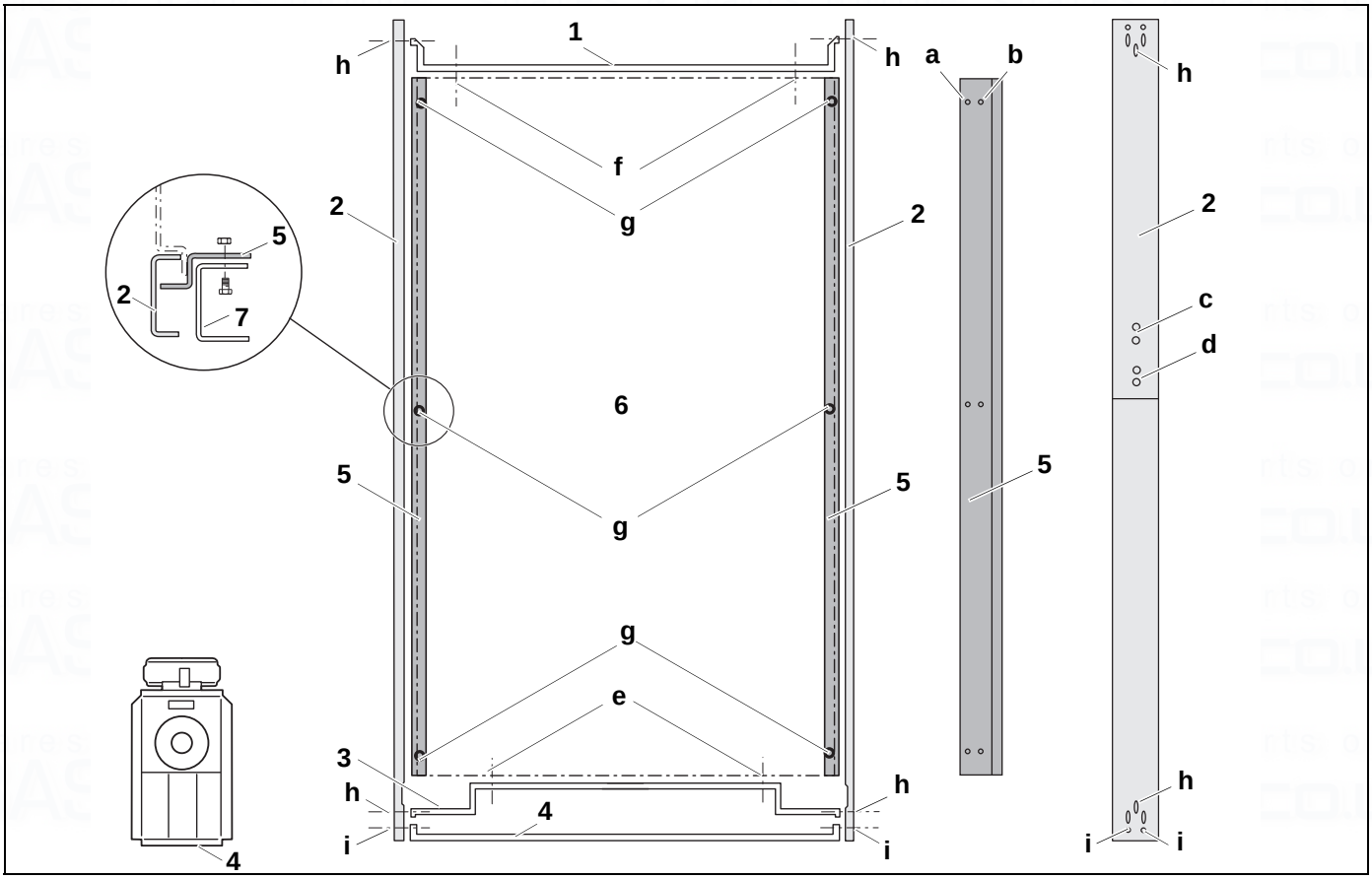

Fig. 20 Lower connection plates (plan view)

- Screw [e] lower front connection plate [3] onto boiler block [6] with 2 screws.
- Screw [f] lower rear connection plate [1] with 2 screws on the boiler block [6].
- Screw [g] left and right spacing plates [5] onto the U-shaped rail at the bottom of the boiler [7] using 3 bolts and 3 nuts for each.
  Use holes [a] for 790 kW boilers and 970 kW boilers.
  Use holes [b] for 1200 kW boilers.

1 Rear connection plate

2 Side blue plinth panels

3 Front connection plate

4 Front blue plinth panel

5 Spacing plate

6 Boiler body

7 U-shaped rail on the bottom of the boiler

a Position of the bolts on the spacing plates for 790 kW and 970 kW boilers (plan view)

b Position of the bolts on the spacing plates for 1200 kW boilers (plan view)

c Position of the bolts on the blue side plinth panels for 970 kW and 1200 kW boilers (side view)

d Position of the bolts on the blue side plinth panels for 790 kW boilers (side view)

e Position of the bolts on the lower front connection plate (plan view)

f Position of the bolts on the lower rear connection plate (plan view)

g Position of the bolts and nuts on the spacing plates (plan view)

h Position of the bolts on the plinth panels (plan view and side view)

i Position of the bolts on the blue plinth panel (plan view and side view)

7.6 Fitting plinth panels

The plinth panels are located in the dispatch unit Pack B, the corresponding installation material is found in the dispatch unit Pack A.

For the following steps, refer to Fig. 20, page 25.

- The blue side plinth panels (Fig. 20, [2]) are in two parts and must be preassembled (Fig. 20, [d]): position of screws for 790 kW and Fig. 20, [c]: position of screws for 970 kW and 1200 kW boiler sizes.
  Hang both plinth panel sections in the middle, behind the tab on the spacing plates, and level horizontally.
- Screw [h] left and right-hand plinth panels (Fig. 20, [2]) to front and rear connection plates (Fig. 20, [1] and [3]) using 1 bolt for each.
- Screw blue plinth panel at the front (Fig. 20, [4]) to left and right-hand plinth panels (Fig. 20, [2]) using 2 bolts for each (Fig. 20, [i]).

7.7 Fitting the side panels

The side panels are located in the dispatch unit Pack B, the corresponding installation material is found in the dispatch unit Pack A.

- Hook bottom of rear and middle side panels into the folded edge between plinth panel and spacing plate (Fig. 21).

USER INFORMATION

Pay attention to cut-out [1] on the side panels:

- Front side panel 1 cut-out (facing middle side panel).
- Middle side panel 2 cut-outs.
- Rear side panel 1 cut-out (facing middle side panel).

- Lift side panels and hook the folded edge at the top into the side connection plates (Fig. 22).
- Push the side panels towards the back.

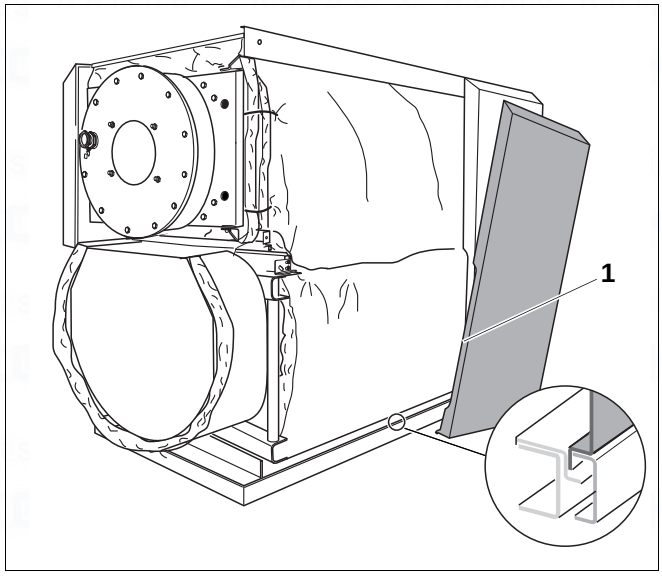

Fig. 21 Hooking side panels at the bottom

- Press ends of the lagging behind the folded edge on the side panel.
- Insert burner cable into entry [3] on the small side sections [4].
- Insert small side sections [4] at the side and at the bottom.
- Screw front side panel to middle connection plate using 1 self-tapping screw [2] and screw middle connection plates firmly in place.
- Screw small side sections [4] at the front using 2 self-tapping screws [1] for each side section.
- Adjust position of side panel using screws (Fig. 16, [3] on page 23).

USER INFORMATION

- Remove the small side panels before opening the return bonnet.

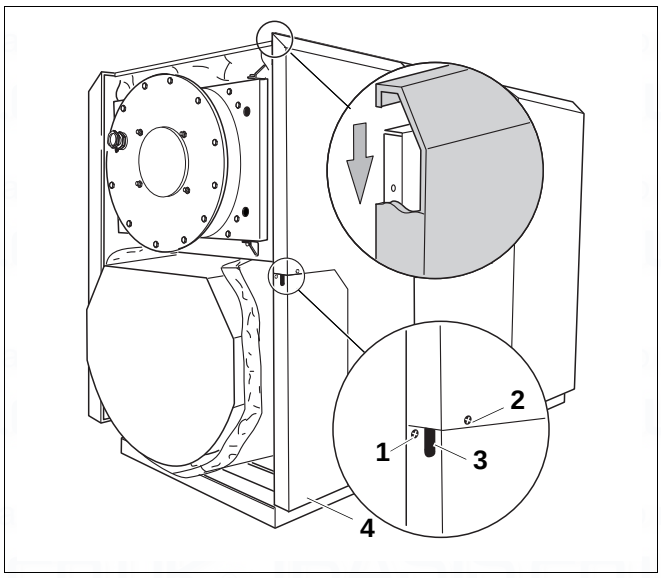

Fig. 22 Hook side panels at the top

1 Self-tapping screw for small side section

2 Self-tapping screw for front side panel

3 Entry for burner cable

4 Small side section

7.8 Fitting the front boiler cover

The parts of the front boiler cover can be found in the dispatch unit Pack B.

- Place front boiler cover [1] on top of the folded edges of the side panels and pull forwards until the right and left-hand hooks click into place in the slots.
- Screw front boiler cover firmly into the side connection plates by screwing 2 self-tapping screws [2] through the tabs on the boiler cover and the folded edge on the side panels.

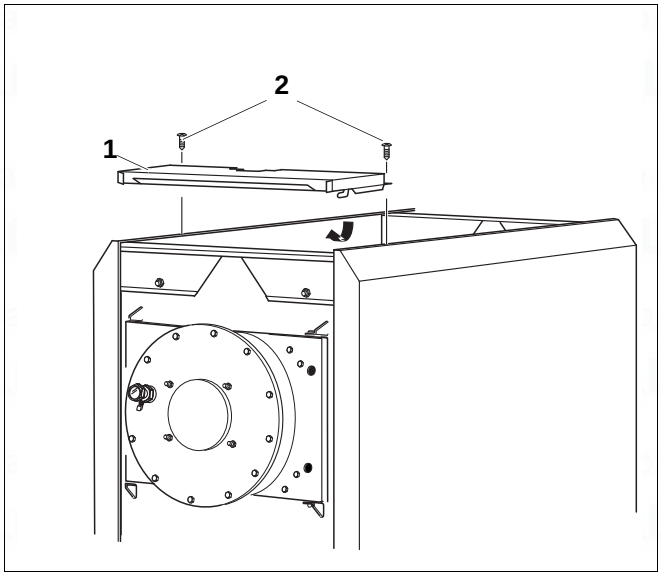

Fig. 23 Installing the front boiler cover

1 Front boiler cover

2 Self-tapping screws

8 Making heating system, flue gas and water connections

This chapter details how you make the boiler flue gas and water connections.

USER INFORMATION

- Install a dirt trap in the return close to the boiler in order to protect the appliance from debris within the system water.

8.1 Fitting the flue pipe sealing collar (accessory)

- Fit the flue pipe sealing collar as described in the separate installation manual.

8.2 Fitting the flue gas temperature sensor (accessory)

- Fit the flue gas temperature sensor as described in the separate installation manual.

8.3 Information regarding the connection of the boiler to the pipework

Please observe the following information regarding the boiler connection to the pipework. This is important for fault-free operation.

CAUTION!

SYSTEM DAMAGE

from leaking connections!

- Fit the connecting pipes to the boiler in such a way that they are not under stress.

8.4 CH return

- Connect the heating system returns to the boiler return connections [1] and [2].

USER INFORMATION

- Install a dirt trap in the return close to the boiler in order to protect the appliance from debris within the system water.

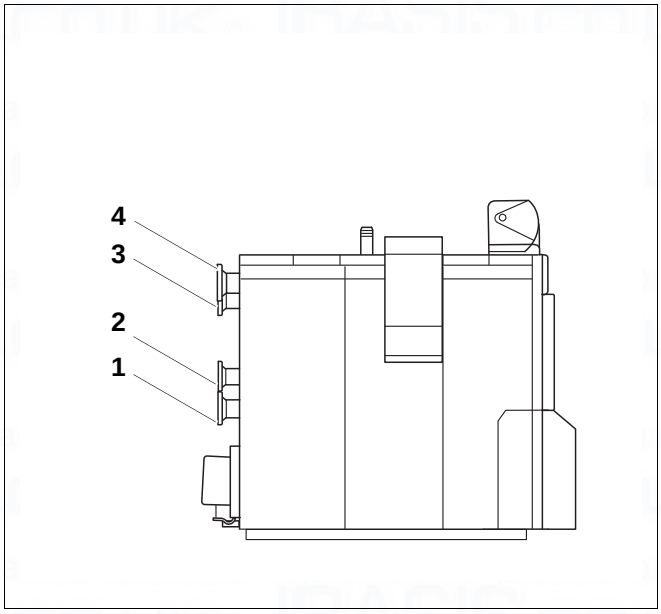

Fig. 24 Logano plus SB735 Gas boiler

1 HT Boiler Return = RK1

2 LT Boiler Return = RK2

3 Flow safety line = VSL

4 Boiler flow = VK

8.5 CH flow

- Connect the heating system flow to the boiler flow connection (Fig. 24, [4]).

8.6 Instructions for safety line flow

CAUTION!

SYSTEM DAMAGE

by connecting incorrect components to the flow safety line!

- Never connect a DHW cylinder or other heating circuit to the flow safety line (Fig. 24, [3], page 30).

8.7 Filling the boiler and checking connections for leaks

Check the heating system for leaks before commissioning to ensure there are no leaks when the system is in operation.

CAUTION!

SYSTEM DAMAGE

through overpressure during leak testing!

Pressure, control and safety equipment may be damaged through excessive pressure.

- When you carry out the leak test, ensure that no pressure, control or safety equipment that cannot be isolated from the boiler water chamber is fitted.

CAUTION!

SYSTEM DAMAGE

through temperature stresses!

- Only fill the system when cold (the flow temperature must be no more than 40 °C).
- When the heating system is in operation, do not fill it via the boiler fill and drain valve. Instead, use the filling valve in the heating system (return).

CAUTION!

RISK TO HEALTH

from contamination of drinking water!

- Always observe the regulations and standards applicable in your country for the prevention of contamination of drinking water (e.g. by water from heating systems).
- In Europe, observe standard EN 1717.

CAUTION!

SYSTEM DAMAGE

from incorrect fill water!

- Pay attention to the water quality as specified in the operator's log, and record the volume and quality of the water used to fill the system.

- Fill the heating system with water (➔ Chapter 12.1 "Filling the heating system", page 41).
- Check all connections for leaks.

8.8 Instructions for flue gas systems

The flue gases must be led outside into the open air via flue pipes and flues.

Use only flue pipes and chimney flues that conform to building regulations and are resistant to humidity.

Before commissioning the heating system, check that the flue gas system used is suitable for the boiler.

Check the flue connection for leaks (optional extra: flue pipe sealing collar).

Observe the installation instructions of the flue gas system manufacturer!

EN 303 permits an amount of leakage from the hot gas side of the boiler.

8.9 Instructions for neutralisation device (accessory ordered separately)

USER INFORMATION

- Please refer to the separate installation instructions for installation and maintenance of the neutralisation device (neutralisation device scope of supply).

- Push siphon provided onto the pipe stub on the flue gas header and fasten union nut to the siphon.
- Connect drain hose to the connector [1] on the condensate outlet (siphon) [2] using a clip. If using a HT pipe Ø 40, saw tee off the siphon.

USER INFORMATION

- Make sure that the condensate generally runs via the flue pipe into the boiler.
- If this is not possible, only stainless steel or plastic tees may be used in the separate pipe inlet.
- In ceramic flue systems, you must fit a silt trap (pot).

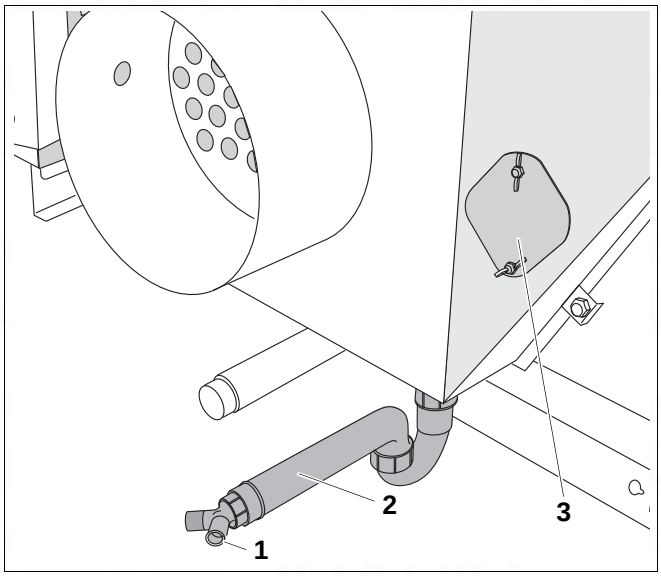

Fig. 25 Condensate outlet

1 Connector for drain hose

2 Siphon

3 Inspection opening

9 Fitting control unit and sensor well

The control unit is fastened to the front boiler cover by fixing 4 hooks into 4 holes.

Logamatic 4311/4312/4321/4322/4211/4212 control unit

- Unscrew both self-tapping screws [1] from the top out of the terminal cover [2] and remove the cover.
- Slightly tilt the control unit forward and set down, so that the insertion hooks at the front lead into the oval drilled holes. Push the control unit forward and tilt down at the rear, until both flexible hooks engage on the r.h. and l.h. side (arrowed in Fig. 26).
- Route the capillary tube through the cable duct [3] and unroll to the required length.
- Using two self-tapping screws, screw the base of the control unit to the front boiler cover through the two holes on the left and right inside the cable duct.

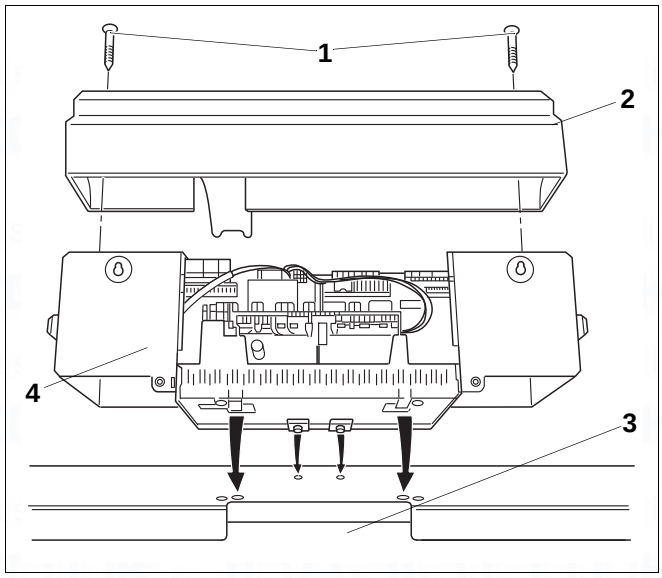

Fig. 26 Opening and positioning the Logamatic 4000 control system

1 Self-tapping screws
2 Terminal cover
3 Cable duct
4 Control unit

USER INFORMATION

If necessary, you can break out or cut out the knock-out section [4] in the rear panel section [3].

Establishing the electrical connection as shown in the wiring diagram.

- Insert the cable clips (with the connecting cable in place) into the clip frame and secure the cable by clamping it with the tab (Fig. 27).
- Insert both lower hooks [1] on the right and left sides of the rear panel section [3] into the slot in the upper edge of the clip frame (Fig. 27).
- Push both upper elastic push-in hooks [2] slightly inwards (arrowed in Fig. 27) and insert the rear panel section [3] so that both hooks lock into place.
- Put terminal cover in place and screw tight with 2 self-tapping screws (Fig. 26, page 33).

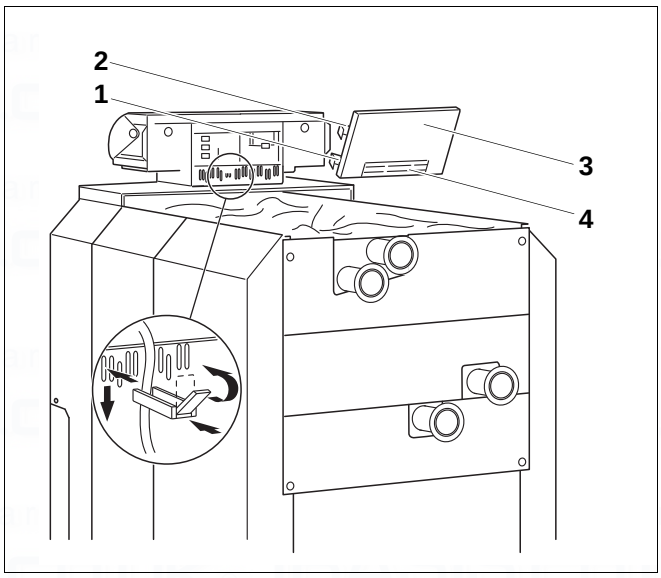

Fig. 27 Fitting the cable clips

1 Lower hook

2 Elastic push-in hook

3 Rear panel component

4 Knock-out

USER INFORMATION

- Take care to ensure correct cable and capillary tube routing!
- Create a permanent mains power connection in accordance with EN 50 165!
- Observe all local regulations!

- Route the capillary tubes and sensor to the sensor well (Fig. 28).
- Feed sensor into the sensor well (test port M, ➔ page 10 in Fig. 3) until it bottoms out (Fig. 28).

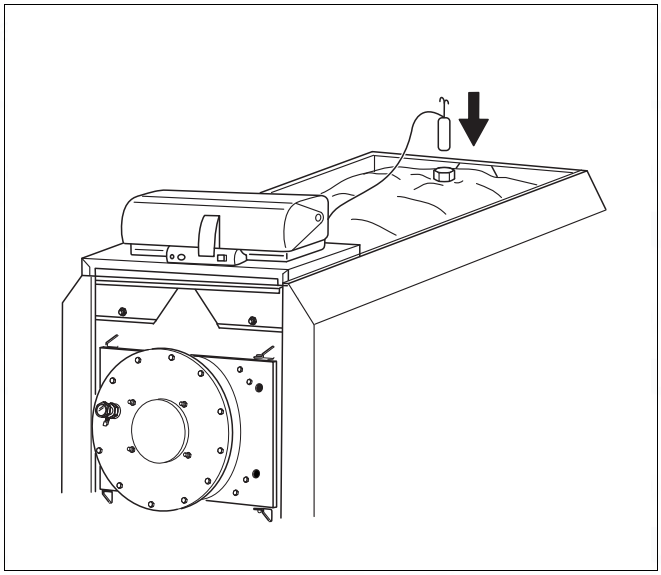

Fig. 28 Sensor into sensor well

- The plastic spiral [2] that holds the sensors together is pushed back automatically when inserted. To ensure a good contact between sensor well [3] and sensor surfaces, and thereby a reliable temperature transfer, the compensating spring [1] must be pushed in between the sensors.
- Press the sensor holder [4] onto the sensor well head from the side or from above.

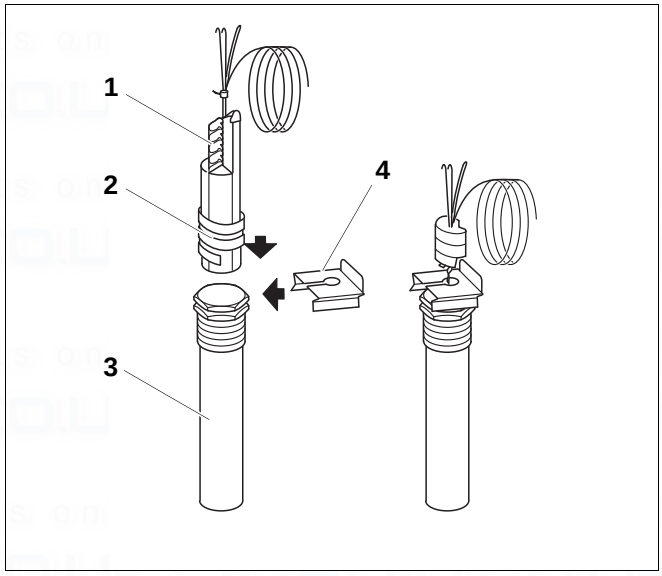

Fig. 29 Capillary tubes with sensors and sensor well

1 Compensating spring

2 Plastic spiral

3 Sensor well

4 Sensor retainer

10 Installing the boiler casing

This chapter describes how to fit the following boiler casing parts:

- boiler cover sections,
- lower front panel,
- upper front panel,
- and the rear panel sections.

10.1 Fitting boiler cover sections

- Loosely lay boiler cover sections [1], [3], [4] and [5] on top of the right and left side panels, as shown in Fig. 30, with the folded edges facing forwards. Position boiler cover section [2] with the folded edge facing backwards.
- Push boiler cover sections forwards.

USER INFORMATION

The third cover section [3] has a notch for the low water indicator.

Boiler size in kW	Section 1 in mm	Section 2 in mm	Section 3 in mm	Section 4 in mm	Section 5 in mm
790	450	450	450	283	283
970	450	450	450	493	493
1200	450	450	450	493	493

Tab. 6 Measurements for boiler cover sections [1] to [5] (all measurements in mm)

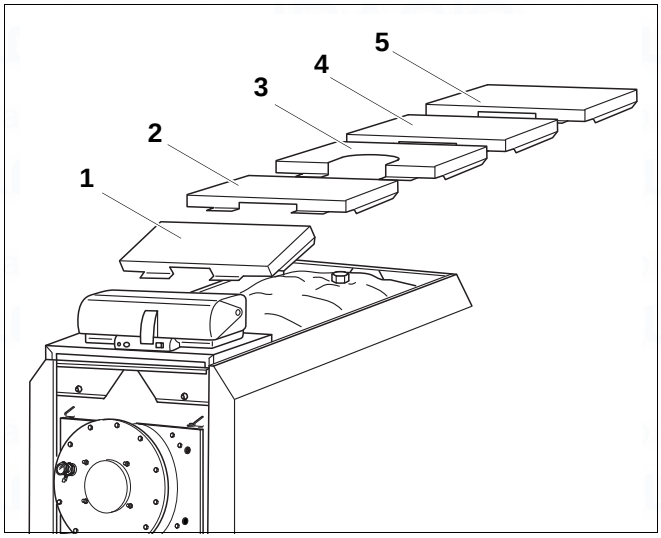

Fig. 30 Cover sections

- Align middle connection plate and screw firmly in place.
- Insert the thermal insulation into the lower front panel [1].
- Feed lower front panel with the folded edge behind the plinth panels and hook into the slots on the folded edge of the side panel, using the 2 hooks (Fig. 31).
- Insert the tabs on the upper front panel [2] into the slots on the folded edge of the lower front panel, and hook the top into the folded edge on the front boiler cover.

USER INFORMATION

If it is difficult to put the front panel in place, you must re-align the middle connection plate.

- Using hooks, hook upper panel [3] and decorative panel [2] into the front panel sections.

10.2 Fitting data plate

- Attach the type plate [1] to either the left or right side panel, depending on which is most convenient.

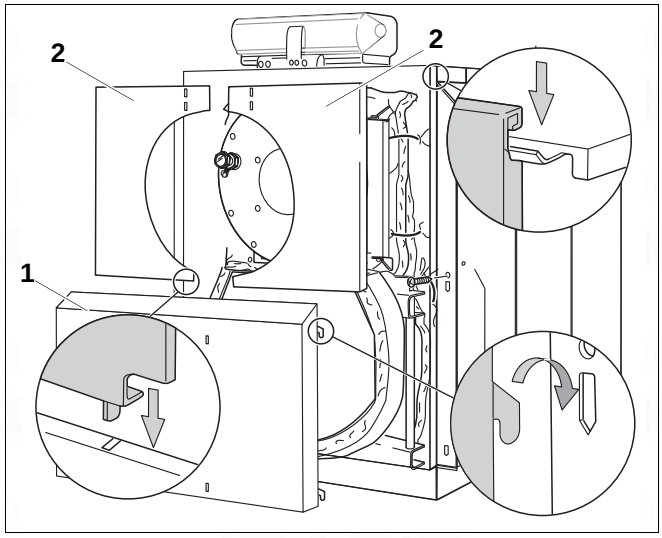

Fig. 31 Facing panels

1 Lower front panel

2 Upper front panel

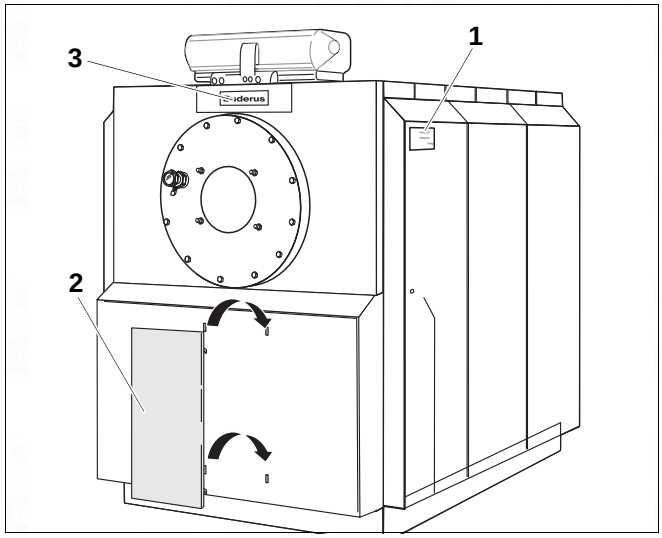

Fig. 32 Hooking in the panel sections

1 Type plate

2 Decorative panel

3 Upper panel

10.3 Fitting the rear panel sections

The sections for the rear panel can be found in the dispatch unit Pack C. The rear panel is in 7 sections (Fig. 33).

- Screw lower rear panel section [1] onto the folded edge of the side panels, using 2 self-tapping screws on the left and 2 on the right.
- With the folded edge facing inwards, screw small middle rear panel section [6] onto the lower rear panel section [1] using 2 self-tapping screws.
- Insert middle rear panel section [2] with the Z-profile edge behind the lower rear panel section, lay on the folded edge of the side panel and screw in place using 2 self-tapping screws on the right and 2 on the left.
- Insert upper rear panel section [3] with the Z-profile edge behind the middle rear panel section, lay on the folded edge of the side panel and screw in place using 2 self-tapping screws on the right and 2 on the left.
- Using the tab, hook upper small rear panel section [4] into the upper rear panel section and screw in place using a self-tapping screw.
- Screw one or two cable clips [5] or a cable conduit to the upper rear panel section.
- Screw left and right-hand sealing plates [7] to the side panel using 2 self-tapping screws for each.

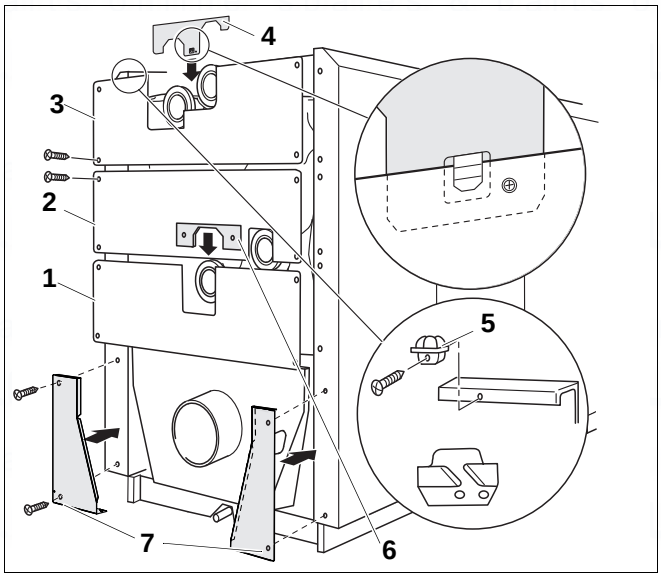

Fig. 33 Fitting the rear panel sections

1 Lower rear panel section
2 Middle rear panel section
3 Upper rear panel section
4 Upper small rear panel section
5 Cable clip
6 Small middle rear panel section
7 Left and right sealing plates

11 Fitting burner (accessory)

When fitting the burner, you must observe the burner manufacturer's instructions.

CAUTION!

SYSTEM DAMAGE

through incorrect burner!

- Only use burners that meet the technical requirements of the Logano plus SB735 Gas boiler.

CAUTION!

SYSTEM DAMAGE

through incorrect burner adjustment (overloading)!

- Make sure that the value set does not exceed the combustion heat output Qn(Hi) stated on the rating plate.

Depending on the burner make or type, you must use the corresponding burner plate or make necessary alterations (drilled burner plate as optional extra).

USER INFORMATION

- Seal the gap between blast tube [2] and thermal insulation [1] on-site, using the insulating rings provided [3].

USER INFORMATION

Pay attention to the projection (➔ Fig. 35) of the lower front panel in relation to the burner plate. Make the gas connection at the side or from above if necessary.

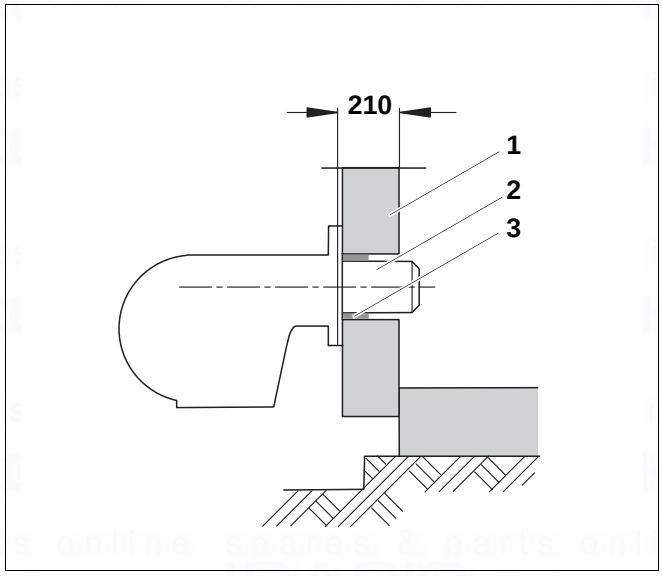

Fig. 34 Fitting burner

1 Thermal insulation

2 Blast tube

3 Insulating rings

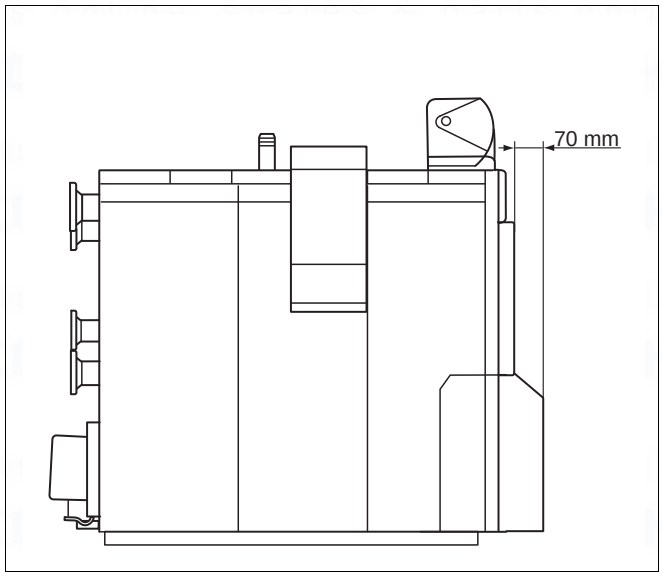

Fig. 35 Projection between lower front panel and burner plate

12 Commissioning the heating system

Logamatic control units are connected to the Logano plus SB735 Gas boiler. The commissioning process for the different types of control unit is the same.

CAUTION!

BOILER DAMAGE

due to heavy dust deposits.

- Do not operate the boiler where heavy dust contamination persists, e.g. through building work inside the boiler room.

WARNING!

RISK TO LIFE

from escaping flue gas.

- Before commissioning the boiler or neutralisation device, pour approx. 10 litres of water into the inspection opening on the flue gas header (Fig. 25, [3], page 32) to ensure that the neutralisation holder is filled. This prevents flue gases from escaping from the boiler siphon.

CAUTION!

BOILER DAMAGE

from corrosion and sludge.

- Before filling, flush the entire heating system.
- Check the quality of the fill and top-up water, so as to avoid scaling and corrosion (➔ Chapter 12.1 "Filling the heating system", page 41)

USER INFORMATION

- Install the neutralisation device according to the installation instructions!
- Perform start up according to the operating instructions for the boiler, burner, low water indicator and electronic heating circuit control unit.
- Make the user familiar with the heating system and its operation. Hand over the technical documentation.
- We recommend you take out a contract covering an annual inspection and maintenance on an as-required basis.
- Attention must be drawn to any special considerations concerning maintenance.

- Complete the commissioning report (➔ Chapter 12.5 "Commissioning report", page 42).

12.1 Filling the heating system

CAUTION!

SYSTEM DAMAGE

through temperature stresses!

- Only fill the system when cold (the flow temperature must be no more than 40 °C).
- When the heating system is in operation, do not fill it via the boiler fill and drain valve. Instead, use the filling valve in the heating system (return).

CAUTION!

RISK TO HEALTH

from contamination of drinking water!

- Always observe the regulations and standards applicable in your country for the prevention of contamination of drinking water (e.g. by water from heating systems).
- In Europe, observe standard EN 1717.

CAUTION!

SYSTEM DAMAGE

from incorrect fill water!

- Pay attention to the water quality as specified in the operator's log, and record the volume and quality of the water used to fill the system.

For the correct use and treatment of the fill and top-up water, follow the Code of Practice K8 "Water treatment in DHW heating systems" in the applicable Buderus catalogue, as well as VDI 2035 "Guideline for water treatment".

The pH value of the heating water will increase after the heating system has been filled. After 3 – 6 months (during the first service), check whether the pH value of the heating water has stabilised.

12.2 Flushing the heating system

You must flush the heating system prior to commissioning to prevent contamination that could attack and damage the circulation pump, for instance.

USER INFORMATION

If a heating system contains several heating circuits, these must be flushed one after the other.

- Isolate the heating flow and return.
- Connect the heating flow to a fresh water connection.
- Connect hose to the heating return.
- Put the hose from the heating return into a drain.
- Open all shut-off devices and radiator valves in the heating system.
- Flush the heating system with fresh water until clear water emerges from the heating return.

12.3 Preparing the heating system for operation

Observe the following when commissioning:

- Before commissioning, vent the heating system correctly.
- Check that the inspection opening on the flue gas header is closed.
- Check that the burner door and the return bonnet are screwed shut with hexagon bolts.

12.4 Commissioning the control unit and the burner

Start up your boiler using the control unit (in this example: Logamatic 4321 control unit). By commissioning the control unit, you also automatically commission the burner. The burner can then be started via the control unit. For further details, see the installation instructions of the relevant control unit or burner.

- Fill out the commissioning report in the burner documentation.

12.5 Commissioning report

Carefully fill in the commissioning report during commissioning.

- Sign all commissioning work as completed and enter the date.

	Commissioning tasks	Page (individual steps)	Comments (signature)
1.	Fill the heating system with water	page 41	
2.	Vent the heating system correctly	page 41	
3.	Leak test performed? - on the water side - on the flue gas side - on the gas side	 page 31 page 31 ➔ burner documentation	
4.	Start up the control unit	➔ control unit documentation	
5.	Starting the burner	➔ burner documentation	
6.	Check the flue gas temperature		
7.	Inform the system user, hand over the technical documentation, and enter the fuel used in this heating system in the table on page 2 of the operating instructions.		
8.	Confirm professional commissioning Company stamp/signature/date		

13 Shutting down the heating system

CAUTION!

SYSTEM DAMAGE

through frost.

The heating system can freeze up if it has been shut down.

- Protect the heating system against frost when temperatures below zero are expected. To do so, drain the heating water at the lowest point of the heating system using the fill & drain valve. The air vent valve at the highest point in the system must also be open.

13.1 Shutting down the heating system via the control unit

Shut down your heating system using the control unit (Logamatic control unit). The burner is automatically shut down when the control unit is shut down.

- Isolate the fuel supply to the burner.

13.2 Shutting down the heating system in emergencies

USER INFORMATION

- In an emergency (and only in an emergency), switch OFF the heating system via the boiler room circuit breaker or heating system emergency isolation switch.

In dangerous situations, immediately isolate the main fuel shut-off valve and cut off the electrical power supply to the heating system via the boiler room main fuse or the emergency-off button.

- Isolate the fuel supply to the burner.

14 Servicing

14.1 General notes

Offer a contract for an annual inspection and for maintenance on an as-required basis to your customer. Refer to Chapter 14.7 "Inspection and maintenance reports", page 49 for information about what such contracts should contain.

USER INFORMATION

You may order spare parts from the Buderus spare parts catalogue.

USER INFORMATION

- For burner maintenance, follow the burner manufacturer's maintenance instructions.

14.2 Preparing the boiler for inspection and maintenance

- Shut down the heating system (Chapter 13 "Shutting down the heating system", page 43).

WARNING!

RISK TO LIFE

from electric shock when the heating system is open.

- Before opening the heating system, disconnect it from the power supply by means of the emergency-off button or the relevant circuit breaker in the main fuse board.
- Prevent unintentional reconnection of the electricty supply.

WARNING!

RISK TO LIFE

from the explosion of flammable gases!

- Work on gas components must only be carried out by qualified gas fitters.

- Check the general condition of the heating system.
- Visually and functionally check the heating system.
- Check all system parts that carry fuel or water for leaks and visible corrosion.

EN 303 permits an amount of leakage from the hot gas side of the boiler.

14.3 Preparing the boiler for cleaning with brushes

- Check and clean (if required) the flue gas header and condensate drain via the inspection opening (Fig. 25, [3] on page 32).
- Remove upper panel [4] and decorative panel [1].
- Remove upper front panels on the left [3] and right [5].
- Remove lower front panel [2].
- Remove left and right side panel sections [6].

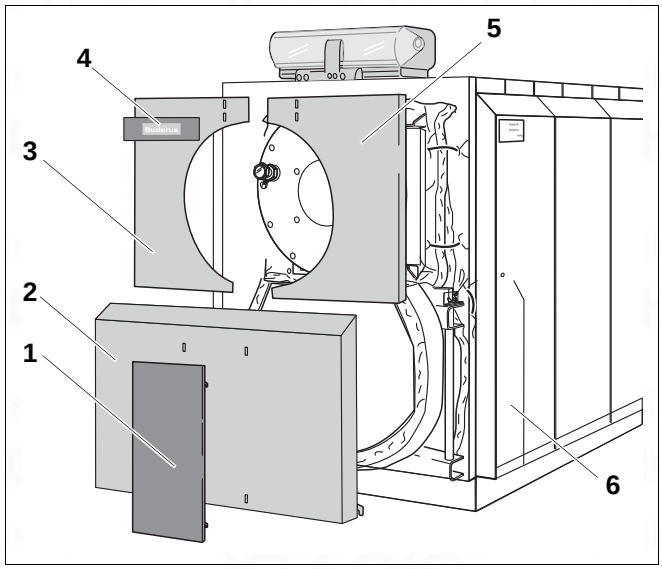

Fig. 36 Removing the front panel

1 Decorative panel
2 Lower front panel
3 Upper front panel (left)
4 Upper panel
5 Upper front panel (right)
6 Side panel sections

CAUTION!

RISK OF INJURY

from falling parts!

- Ensure that there are hinge bolts on the burner door [2] and the return bonnet [1] before you open the doors.

- Loosen screws on the return bonnet [1] and swing return bonnet away.
- Screw hexagon bolts out of the burner door [2] and open burner door.
- Clean the combustion chamber and the heating surfaces.

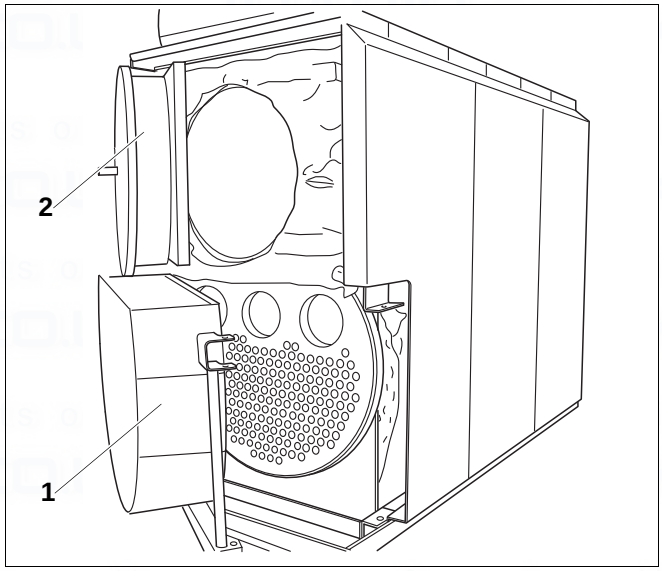

Fig. 37 Opening boiler door

1 Return bonnet
2 Burner door

14.4 Clean the boiler with cleaning brushes

CAUTION!

BOILER DAMAGE

by using the wrong cleaning equipment.

- Use only Buderus cleaning brushes.

- Feed brushes through the secondary heating pipes (Fig. 38).

USER INFORMATION

When cleaning the secondary heating pipes the entire bristle part of the brush must go right through the pipe and out the back before you pull the brush back again.

- Use a vacuum cleaner if necessary to remove any cleaning residues.
- Check the seals around the boiler door, flue gas collector and return bonnet, replacing if necessary.
- Screw burner door shut.
- Close return bonnet and seal by screwing tight.
- Put lagging mat firmly in place.
- Fit side panel sections.
- Fit lower and upper front panels.
- Start up the heating system again.

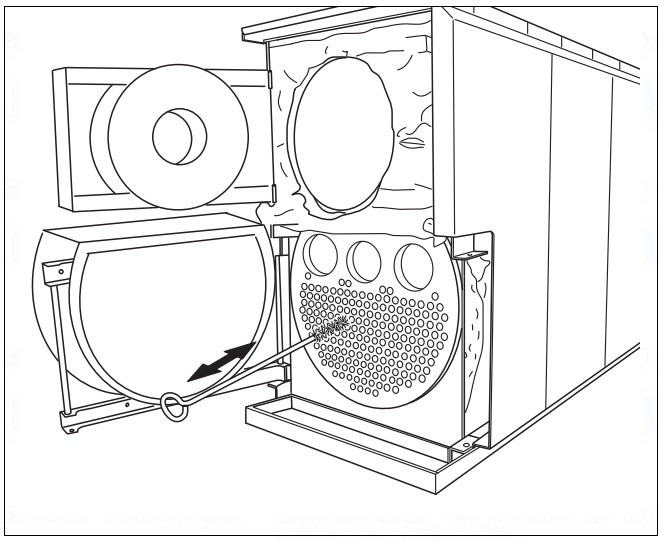

Fig. 38 Cleaning the secondary heating pipes

14.5 Wet-cleaning the boiler

When wet-cleaning, use a cleaning agent appropriate for the level of contamination.

USER INFORMATION

- For wet-cleaning (chemical cleaning), observe the operating instructions of the relevant cleaning equipment and cleaning agent.
  It may be necessary to vary the wet-cleaning process from that described here.
- When wet cleaning, ensure that the cleaning agent is chloride-free.

- Disconnect your heating system from the mains power supply.
- Close off the fuel supply.
- Disconnect neutralisation connection (siphon) before wet cleaning and secure outlet.
- Ensure adequate ventilation of the boiler room.
- Select a cleaning agent that is appropriate for the type of contamination (soot or encrustation).
- Cover the control unit with foil to prevent ingress of the cleaning agent.

When wet cleaning, proceed in the same order as described in Chapter 14.3 "Preparing the boiler for cleaning with brushes", page 45.

- Spray cleaning agent evenly into the combustion chamber and onto heating surfaces.
- Let the cleaning agent soak in according to manufacturer's instructions.
- Remove the foil from the control unit.
- Liquid cleaning residues can be drained off through the inspection opening (Fig. 25, [3], page 32) on the flue gas header.
- Make the neutralisation connection (siphon) again.

WARNING!

RISK TO LIFE

from escaping flue gases.

- Before heating, make sure that you have reconnected and filled the siphon, to prevent flue gases escaping.

- Open the fuel supply.
- Start up the heating system.
- Heat up the boiler to a boiler water temperature of at least 70 °C.
- Disconnect your heating system from the mains power supply.
- Close off the fuel supply
- Allow the boiler to cool down.
- Disconnect neutralisation connection (siphon) and secure outlet.
- Clean combustion chamber and heating surfaces.
  To do this, follow all steps described in Chapter 14.3 "Preparing the boiler for cleaning with brushes", page 45.
- Clean secondary heating pipes by feeding brushes through (Fig. 38, page 46) or rinsing.
- Any accumulated liquid can be drained off through the inspection opening (Fig. 25, [3], page 32) on the flue gas header.
- Make the neutralisation connection (siphon) again.
- Check the seals around the burner door and return bonnet, replacing if necessary.
- Screw burner door shut.
- Close return bonnet and seal by screwing tight.
- Put lagging mat firmly in place.
- Fit side panel sections.
- Fit lower and upper front panels.
- Continue to ensure adequate ventilation of the boiler room.
- Start up the heating system again.

14.6 Checking the heating system water pressure

A distinction is generally made between open vented and sealed unvented heating systems. In practice, open heating systems are seldom installed. We will therefore be using a sealed system to demonstrate how you can check the water pressure.

Open heating systems

For open heating systems, the hydrometer needle [1] should be within the red band [3].

Sealed heating systems

In sealed systems, the pressure gauge needle (Fig. 40, [2]) must lie within the green field (Fig. 40, [3]). Adjust the red needle (Fig. 40, [1]) on the pressure gauge to the pressure required by your heating system.

USER INFORMATION

- Generate the operating pressure required for the heating system.

- Set the pressure gauge needle accordingly.
- Check the heating system water pressure.

CAUTION!

SYSTEM DAMAGE

from frequent topping-up.

The heating system may be damaged, depending on water quality, by corrosion or scaling if you frequently need to top-up your system with water.

- Ensure that the heating system is vented correctly.
- Check the heating system for leak tightness and proper operation of the expansion vessel.

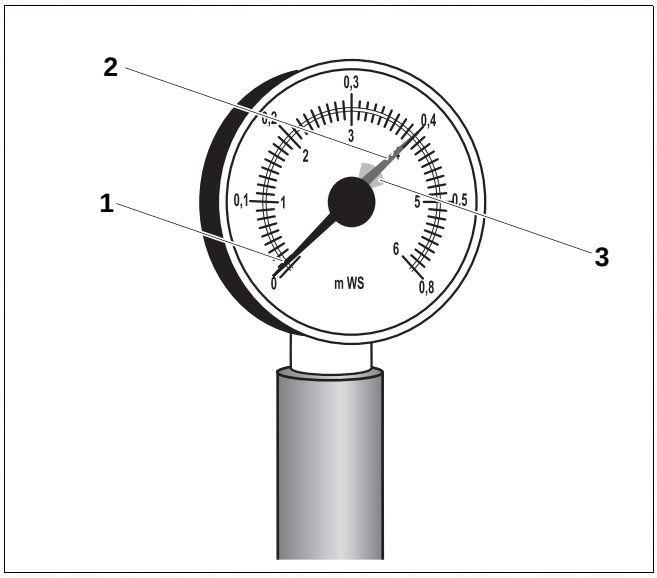

Fig. 39 Hydrometer for open unvented heating systems

1 Hydrometer needle

2 Green needle

3 Red field

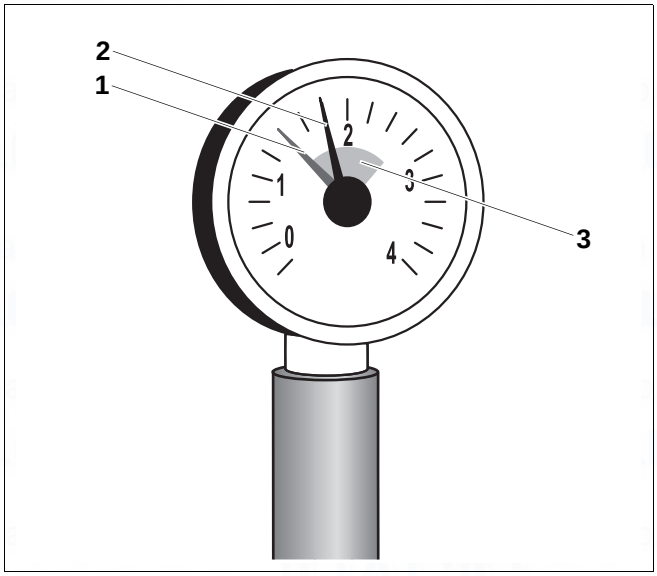

Fig. 40 Pressure gauge for sealed unvented heating systems

1 Red needle

2 Pressure gauge needle

3 Green band

14.7 Inspection and maintenance reports

The inspection and maintenance reports provide an overview of the required inspection and maintenance work.

- Sign for all inspection and maintenance work completed, and enter the relevant date.

	Inspection work	Page (individual steps)	Comments
1.	Check the general condition of the heating system	page 44	
2.	Visual and functional check of the heating system	page 44	
3.	Check all system parts that carry fuel or water for: - leak tightness - visible corrosion	page 44	
4.	Check the combustion chamber and the heating surface for contamination, shut down the system for this step	page 46	
5.	Check the burner	➔ burner documentation	
6.	Check the flue gas piping for function and safety	➔ burner documentation	
7.	Check the heating system water pressure Check the water pressure and inlet pressure of the membrane pressure expansion vessel	page 48	
8.	If necessary, check the operation of the DHW cylinder and the magnesium anode	➔ DHW cylinder documentation	
9.	Check the control unit settings	➔ control unit documentation	
10.	Final inspection check; take measurements and document figures and test results.		
	Confirm professional inspection with signature, date and company stamp		

	Demand-dependent maintenance work	Page (individual steps)	Comments
1.	Shut down the heating system	page 43	
2.	Clean hot gas flues (heating surfaces)	page 47	
3.	Clean the combustion chamber.	page 47	
4.	Check the gaskets/sealing cords on the boiler and replace if necessary	page 47	
5.	Tighten clean-out cover to form a sound gas seal		
6.	Start up the heating system	page 40	
7.	Final checks of the maintenance work; take measurements and document figures and test results	➔ burner documentation	
8.	Check the function and operational safety (safety equipment)		
	Confirm professional maintenance with signature, date and company stamp		

14.8 Maintenance on neutralisation device

When carrying out maintenance on the neutralisation device, use the following checklist.

	Maintenance on neutralisation device	Comments
1.	Shut down the neutralisation device	
2.	Loosen inlet and drain hose on granulate container	
3.	Remove container cover from neutralisation device	
4.	Remove old granulate (container can be upended through 180°), clean container (dispose of granulate along with domestic waste)	
5.	Fill with new granulate (➔ see documentation on neutralisation device; observe the granulate manufacturer's instructions)	
6.	Put neutralisation device container cover back in place and screw shut (if applicable)	
7.	Plug in electrical connection cable (if available) on the neutralisation device	
8.	Connect hoses and check for leak tightness	
9.	Put the neutralisation system into operation	
	Confirm professional maintenance with signature, date and company stamp	

15 Correcting burner faults

Heating system faults are output on the control unit display. You will find detailed information regarding fault displays in the service instructions for the relevant control unit. The burner fault is also indicated by a fault lamp on the burner.

CAUTION!	**SYSTEM DAMAGE** by pressing the reset button too often. The burner ignition transformer may be damaged if you press the reset button more than three times in succession when the burner refuses to start. ● Do not attempt to remedy the fault by pressing the reset button more than three times in succession.

- Press the burner reset button (➔ burner operating instructions).

If the burner does not restart after three attempts, refer to the technical documentation provided with the burner to find out how to reset it.

16 Keyword index

B
Boiler casing 9
Boiler conditions of use 4
Burner door 9
C
CH flow 31
CH return 30
Commissioning report 42
Control thermostat 4
control unit 9
Create a foundation 13
D
Dangerous situations 43
E
Emergencies 43
F
Fill water 41
Flow temperature 4
Frost 13
Fuels 4
H
Heating system emergency stop switch 43
I
Initial operation 40
Inspection and maintenance reports 49
Inspection contract 44
M
Maintenance contract 44
O
Operating pressure, maximum 4
P
Packaging 12
Positioning 13
Product description 9
R
Replenishment water 41
T
Thermal insulation 9
W
Wall clearances 13
Wet cleaning 47

spares & parts online IBASIS.co.uk

spares & parts online IBASIS.co.uk

Buderus
Cotswold Way, Warndon, Worcester WR4 9SW
Customer service: 0870 421 5933
Technical support: 0870 421 5944
Fax: 01905 753130
www.buderus-commercial.co.uk

In the UK and IE, Buderus is a brand name of
Bosch Thermotechnology Ltd.

Bosch Thermotechnik GmbH
Sophienstrasse 30-32
D-35576 Wetzlar
www.bosch-thermotechnology.com

Buderus

spares & parts online IBASIS.CO.UK