Installation and maintenance instructions

Wall-mounted condensing gas system boiler
Buderus 500 - 24/S

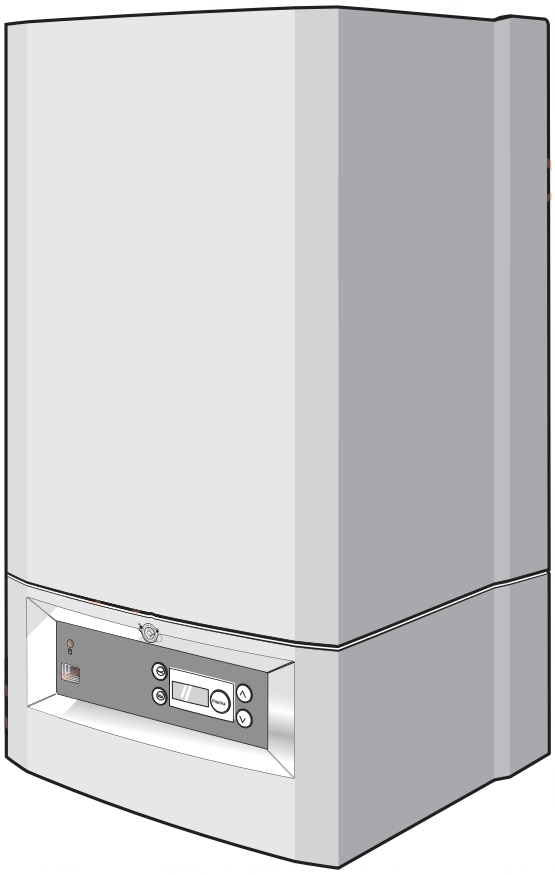

benchmark™

Boulter
Buderus

Please read thoroughly

spares & parts online IBASIS.CO.UK

The boiler meets the basic requirements of the appropriate standards and directives.

Conformity has been substantiated by the proper documents which - together with the declaration of conformity - are filed with the manufacturer.

Subject to technical modifications!

Constant development efforts may result in minor deviations in illustrations, functional steps and technical data.

Updating the documentation

If you have suggestions for improvement or have found discrepancies, please do not hesitate to contact us.

Contents

1 Installation 7
1.2 Dimensions, connections and assembly 9
1.3 Items supplied with unit 10
1.4 Hanging the boiler 10
1.5 Water circulation system 11
1.6 Pipe connections 11
1.7 Flue Installation 15
1.8 Electrical connections. 21
1.9 DBA wiring diagram 22
1.10 Electrical wiring diagram. 22
1.11 System examples 27
2 Commissioning. 30
2.1 Preparing the boiler for operation. 30
3 Inspection 40
3.1 General directions 40
3.2 Preparing the boiler for inspection 40
4 Maintenance 41
4.1 Cleaning the heat exchanger and burner 41
4.2 Cleaning the condensate trap and syphon. 42
5 Appendix. 43
5.1 Residual pump lift. 43
5.2 Spare parts list 43
6 Index 46

G. C. Aplliance No. :

Buderus 500-24/S 41-110-24

Other manuals available for this boiler are:

- user manual;
- service instructions;
- wall spacing frame instructions.

Preface

These Installation and maintenance instructions apply to: Boulter Buderus wall-mounted condensing gas system boilers 500 - 24/S.

Model: $C_{13(x)}$, $C_{33(x)}$, $C_{53(x)}$, $C_{73(x)}$

Type: GB/IE II_{2H3P} 20 mbar, 37 mbar

Power rating: 230 VAC, 50 Hz, IP X4D

Fuse rating: 1.25 Ampere slow blow

The boiler unit consists of the following components:

- **500** Gas condensing boiler
- **24** Maximum output is 24 kW
- **S** System boiler.

Important general instructions for use

Only use the boiler in accordance with its designated use and the installation and maintenance instructions. Installation, maintenance and repair must be carried out by competent service engineers (e.g. CORGI registered). Only use the boiler in conjunction with the accessories and spare parts indicated in the installation and maintenance instructions. Other accessories and consumables may only be used if they are expressly provided for the designated use and if system performance and safety are not affected in any way.

The boiler is suitable for connection to fully pumped, sealed water systems ONLY. Adequate arrangements for completely draining the system by provision of draining valves must be provided in the installation pipework.

Pipework from the boiler is routed downwards as standard, but may be routed upwards behind the boiler using the wall spacing frame.

Subject to technical modifications.

As a result of our policy of constant development, there may be small differences between illustrations, functional steps and technical data.

BENCHMARK' Log Book

All Boulter Buderus gas fired boilers now include an installation, commissioning and service record log book.
The details of the log book will be required in the event of any warranty work being requested.
Please complete the appropriate sections on completion of the installation and commissioning.

REMEMBER: Please hand the log book back to the user.

Regulations and directives

It is a requirement that all gas appliances are installed and serviced by a CORGI registered installer in accordance with the regulations. Failure to install appliances correctly could lead to prosecution. It is in your own interest, and that of safety, to ensure the law is complied with.

The installation must also be in accordance with the latest I.E.E (**BS.7671**) Wiring Regulations, local building regulations, water regulations, the building regulations and the Building Standards (Scotland) and any relevant requirements of the local authority.

Detailed recommendations are contained in the following British Standard Codes of Practice:

BS. 5440:1 Flues (for gas appliances of rated input not exceeding 70 kW).
BS. 5440:2 Ventilation (for gas appliances of rated input not exceeding 70 kW).
BS. 5449 Forced circulation hot water systems.
BS. 5546 Installation of gas hot water supplies for domestic purposes (2nd. family Gases).
BS. 6798 Installation of gas fired hot water boilers of rated input not exceeding 60 kW.
BS. 6891 Low pressure installation pipes.
BS. 7593: 1992: Code of practice for treatment of water in domestic hot water central heating systems.

IGE/UP/1b Tightness testing and purging domestic sized gas installations.

Health and & Safety Document No. 635.

The Electricity at Work Regulations, 1989.

The manufacturer's notes must not be taken, in any way, as overriding statutory obligations.

The design and construction of the Boulter Buderus wall-mounted condensing gas system boiler 500-24/S conforms to the basic specifications listed in the European directive governing gas-fired appliances 90/396/EEC, and with respect to EN 625, EN 483 and EN 677.

NOTE
Observe the corresponding technical rules and the building supervisory and statutory regulations when installing and operating the system.

WARNING!
Keep the burner-control unit housing CLOSED when working on water-bearing components.

NOTE
It is mandatory to clean and service the system once a year. This includes an inspection of the entire system to see if it is in full working order. Defects and faults must be eliminated immediately.

NOTE
When instructions aren't followed, warranty expires.

NOTE
Condensing boilers work more efficient if the CH flow/return temperature is as low as possible.

Timber Framed Buildings

If the boiler is to be fitted in a timber framed building it should be fitted in accordance with the Institute of Gas Engineering document **IGE/UP/7:1998 and BS 5440:1.**

Bathroom Installations

This appliance is rated IP X4D.

The boiler may be installed in any room or internal space, although particular attention is drawn to the requirements of the current IEE (**BS.7671**) Wiring Regulations and, in Scotland, the electrical provisions of the building regulations applicable in Scotland, with respect to the installation of the boiler in a room or internal space containing a bath or shower.

If the appliance is to be installed in a room containing a bath or shower then, providing water jets are not going to be used for cleaning purposes (as in communal baths/showers), the appliance can be installed in Zone 3, as detailed in **BS.7671**.

Compartment Installations

A compartment used to enclose the boiler should be designed and constructed especially for this purpose.
An existing cupboard or compartment may be used, provided that it is modified for the purpose.

In both cases, details of essential features of cupboard/ compartment design, including airing cupboard installation, are to conform to the following:
BS 6798 (No cupboard ventilation is required - see 'Air Supply' for details).

It is not necessary to have a purpose-provided air vent in the room or internal space in which the boiler is installed. Neither is it necessary to ventilate a cupboard or compartment in which the boiler is installed, due to the low surface temperatures of the boiler casing during operation; therefore the requirements of **BS 6798**, **Clause 12**, and **BS 5440:2** may be disregarded.

The permanent clearances required are:

in front:	8 mm
below:	21 mm
right side:	8 mm
left side:	8 mm
above:	21 mm

The position selected for installation MUST allow adequate space for servicing in front of the boiler. See table below:

in front:	350 mm
below:	180 mm
right side:	8 mm
left side:	8 mm
above:	200 mm

In addition, sufficient space may be required to allow lifting access to the wall mounting bracket.
Wall-mounted condensing gas system boilers must only be operated with Boulter Buderus purpose made gas systems, which are certified for this type of boiler.

Observe the relevant standards, regulations and legislation of the country or region of final use.

CAUTION

Use this device for its intended purpose only.

DANGER!
notes relating to the heating system water.

Thoroughly flush the system before it is filled with water. Use only untreated water or water treatment product such as Sentinel X100 to fill and top up the system. For more information about Sentinel call 0151 420 9563.

When using water treatment, only products suitable for use with Boulter Buderus heat exchangers are permitted (e.g. Sentinel X100). Your warranty is at risk if an incorrect water treatment product is used in conjunction with this appliance.
For more information, contact Boulter Buderus Technical Product Support Department.

It is most important that the correct concentration of the water treatment product is maintained in accordance with the manufacturer's instructions.

If the boiler is used in an existing system any unsuitable additives MUST be removed by thorough cleaning. **BS.7593:1992** details the steps necessary to clean a domestic central heating system.

In hard water areas, treatment to prevent lime scale may be necessary - however, the use of artificially softened water is NOT permitted.

Under no circumstances should the boiler be fired before the system has been thoroughly flushed.

Do not use artificially softened water.

Only plastic pipework containing a polymeric barrier should be used.
It is allowed to use copper for the first 600 mm. See also subsection 1.6: “Pipe connections” in this manual.

NOTE:
notes relating to domestic hot water.

- The domestic hot water service must be in accordance with **BS 5546** and **BS 6700**.
- The boilers are suitable for connection to most types of washing machine and dishwasher appliances.
- When connecting to suitable showers, ensure that:
  a. The shower is capable of accepting mains pressures and temperatures up to 65 °C.
  b. The shower is ideally thermostatic or pressure balancing.
- Where temporary hardness exceeds 150 mg/litre, it is recommended that a proprietary scale reducing device is fitted into the boiler cold supply with the requirements of the local water company

CAUTION

Provision must be made to accommodate the expansion of DHW contained within the appliance, where a back flow prevention device is fitted **BS. 67989: §5.4.3**.

Safe handling of substances

No asbestos, mercury or CFCs are included in any part of the boiler and its manufacture.

Hazard definitions and abbreviations

Hazard definitions

DANGER:
Indicates the presence of hazards that will cause severe personal injury, death or substantial property damage.

WARNING:
Indicates the presence of hazards that can cause severe personal injury, death or substantial property damage.

CAUTION:
Indicates presence of hazards that will or cause minor personal injury or property damage.

NOTICE:
Indicates special instructions on installation, operation or maintenance that are important but not related to personal injury or property damage.

Abbreviations

AV	=	Air Vent
BCT	=	Boulter Buderus cylinder thermostat
BDV	=	Boulter Buderus diverter valve
CB	=	Connection Block
CH	=	Central Heating
CHF	=	Central Heating Flow
CHR	=	Central Heating Return
CT	=	Cylinder Thermostat
CWDO	=	Condensate water drainage outlet
DV	=	Diverter Valve
E	=	Earth
L	=	Live
LSV	=	Lock Shield Valve
MCW	=	Mains Cold Water
N	=	Neutal
JB	=	Junction Box / RTH Relay
PL	=	Permanent Live
Prog	=	Programmer
PRV	=	Pressure relief valve (safety valve)
RT	=	Room Thermostat
RV	=	ModuLink 250 RF Receiver
T	=	Timer
TRV	=	Thermostatic Radiator Valve
WC	=	Wiring Centre
ZV	=	Two Port Zone Valve

1 Installation

1.1 Technical specifications

Dimensions	Unit	500 Series wall-mounted condensing gas system boiler
		500 - 24/S
Type of gas supply as established in EN 437 (GB/IE)		GB/IE II_{2H3P} 20 mbar, 37 mbar (natural gas **H** and propane **P**)
Rated thermal load for heating Rated thermal load for preparing hot water	kW kW	5.7 - 23.0 5.7 - 28.5
Rated heating capacity for system temperature (modulating from 30° to 100°) Heating curve 75/60 °C Heating curve 40/30 °C	 kW kW	 5.3 - 22.0 6.0 - 24.0
Seasonal efficiency (SEDBUK) for natural gas for propane	% %	90.3 92.3
Max. gas rate for heating Max. gas rate preparing hot water	m^3/h m^3/h	3.02 2.43
Central heating installation		
Heating water temperature	°C	30 - 80
ΔT at residual head of 200 mbar	°C	< 20
Max. operating pressure of boiler	bar	3.0
Pump over run time	min	5
Expansion vessel		
Capacity of expansion vessel	l	7.5
Admission pressure of expansion vessel	bar	1.0
Pipe connections		
Gas on installation frame (compression fitting)	Ø mm	22
CH flow/return (compression fitting)	Ø mm	22
MCW inlet / DHW outlet (compression fitting)	Ø mm	15
Condensate water outlet	Ø mm	21.5
Pressure relief valve (compression fitting)	Ø mm	15 (adapter supplied with boiler)

Dimensions	Unit	500 Series wall-mounted condensing gas system boiler
		500 - 24/S
Flue gas values		
Condensate water quantity, natural gas, 40/30 °C	l/h	1.6
Exhaust-fume mass-flow rate Full load Part-load	 g/s g/s	 10.6 4.3
Exhaust-fume temperature, full load Heating curve 75/60 °C Heating curve 40/30 °C	 °C °C	 77 55
Exhaust-fume temperature, partial load Heating curve 75/60 °C Heating curve 40/30 °C	 °C °C	 60 35
CO_2 full load, natural gas standard test gas G20	%	9.2
CO_2 full load, natural gas standard test gas G31 propane	%	10.3
Standard emission factor CO	mg/kWh	<22
Standard emission factor NO_x	mg/kWh	<30
Flow pressure available for use	Pa	75
Flue-gas system		
Type of exhaust-fume connection		$C_{13(X)}$, $C_{33(X)}$, $C_{53(X)}$, $C_{73(X)}$
Diameter of flue gas system	mm	60/100 (accessory)
Electrical data		
Mains connection voltage	V	230 (50 Hz)
Electrical power consumption Full/Partial load	W	110/88
Electrical protection rating		IP X4D
Boiler dimensions and weight		
Height x Width x Depth	mm	780 x 460 x 330
Weight (without casing)	kg	31
Casing	kg	3

1.2 Dimensions, connections and assembly

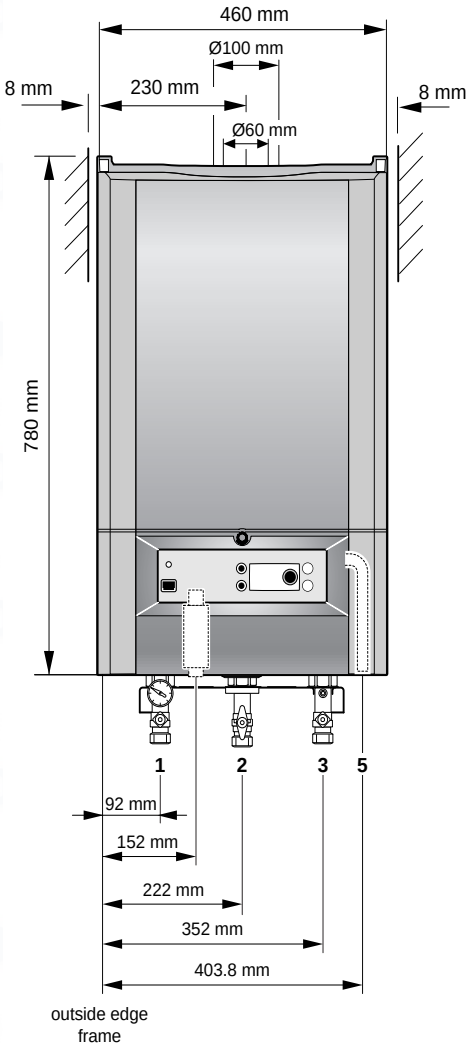

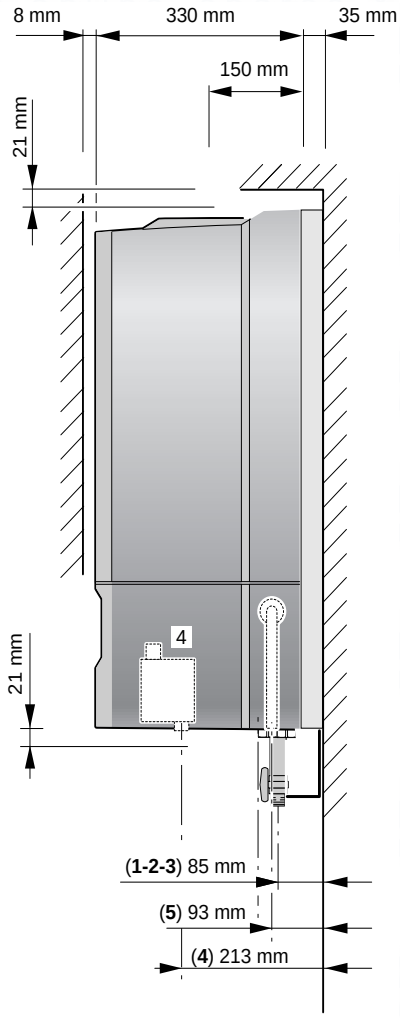

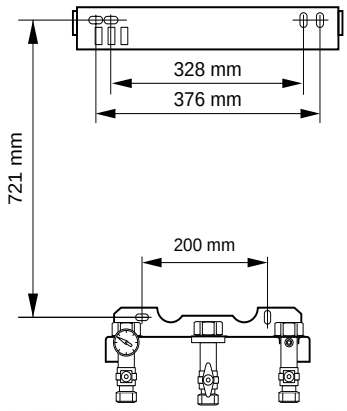

1. CH flow = Ø22 mm (compression fitting)
2. Gas = Gas connection Ø22 mm (compression fitting)
3. CH return = Ø22 mm (compression fitting)
4. CWDO = Condensate water drainage outlet Ø21.5 mm O/D
5. PRV = Pressure relief valve Ø15 mm (compression fitting)

NOTE

See wall-mounting template for the necessary clearances.
The wall spacing frame may not always be necessary.

1.3 Items supplied with unit

- Check the contents against the packing list to ensure that nothing is missing.

Requirements to be met by the place of installation

NOTE

Observe all statutory building regulations applying to the place of installation.

DANGER!

Inflammable materials or liquids must not be stored or used near wall-mounted condensing gas boilers. The site of installation must be frost-protected.

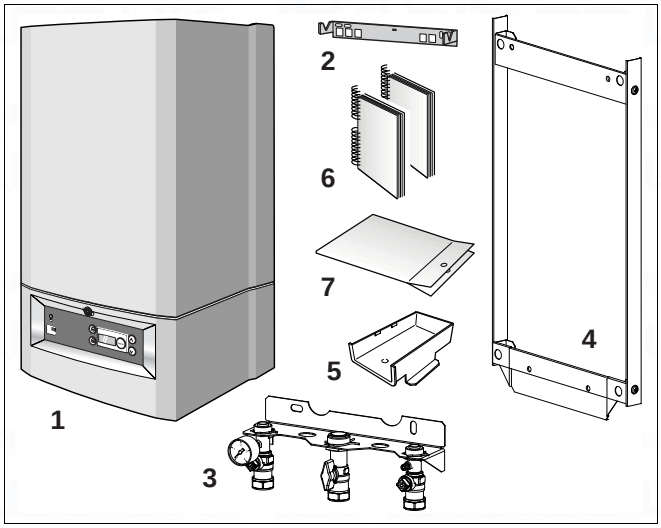

fig. 1 Items supplied with unit

Key to fig. 1:

1: *Wall-mounted condensing gas system boiler*

2: *Wall bracket*

3: *Manifold Assembly*

4: *Wall spacing frame*

5: *Bracket for ModuLink 250 RF*

6: *Technical documents:*
1 x Installation and maintenance manual
2 x User manuals (one is A4 format, the other one is located on the bottom frame of the boiler)
1 x Wall mounting template
1 x Benchmark Logbook
1 x Warranty card
1 x Wall spacing frame instruction
1 x Envelope for Warranty card

7: *Plastic bag containing the following accessories:*
4 x wall fixing screws
4 x wall plugs
4 x washers
8 x fixing screws for wall spacing frame
Seals (1 x G½“ - 1“, 2 x ¾“ - 22 mm, 2 x ½“ - 15 mm)
Initial start-up sticker
Second identification plate
Pressure Relief Valve compression fitting + pipe
Radiator key

1.4 Hanging the boiler

NOTE

Refer to manual of the wall spacing frame, which is supplied with the unit, for the correct mounting instructions when using a wall spacing frame.

CAUTION

DO NOT remove the polystyrene foam bottom slab until lifted into position.
During installation work, cover the wall-mounted condensing gas boiler and the flue gas adapter to prevent site dirt from entering.

- Hang the wall mounting template.

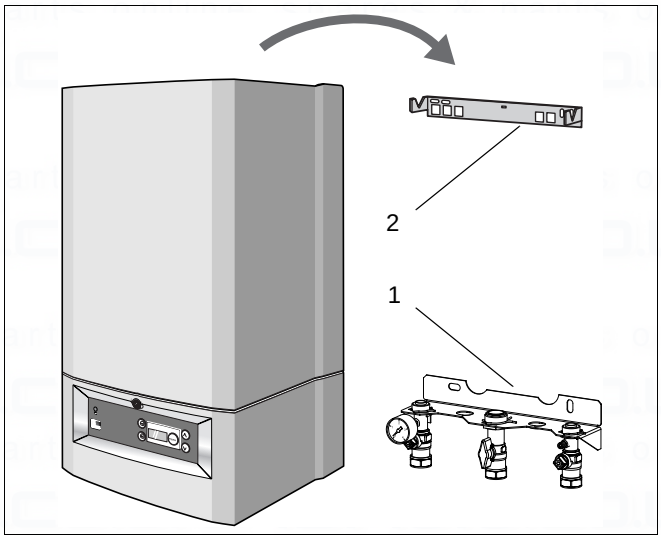

fig. 2 Installation

- Drill the necessary holes.
- Attach the manifold assembly to the wall (fig. 2, item 1).
- Make the pipework connections to the manifold.
- Attach the wall bracket (fig. 2, item 2).
- Open the locking mechanism using a radiator key (fig. 3, item 1). The radiator key is included in the delivery of the boiler in the accessories bag.
- Detach the casing of the condensing gas boiler (fig. 3).
- Remove the polystyrene foam piece from the top of the boiler.
- Hang the condensing gas boiler onto the wall bracket (fig. 2).

NOTE

If the boiler isn't connected to the pipework immediately, place caps on the pipe connections.

- Connect manifold unions to the boiler.

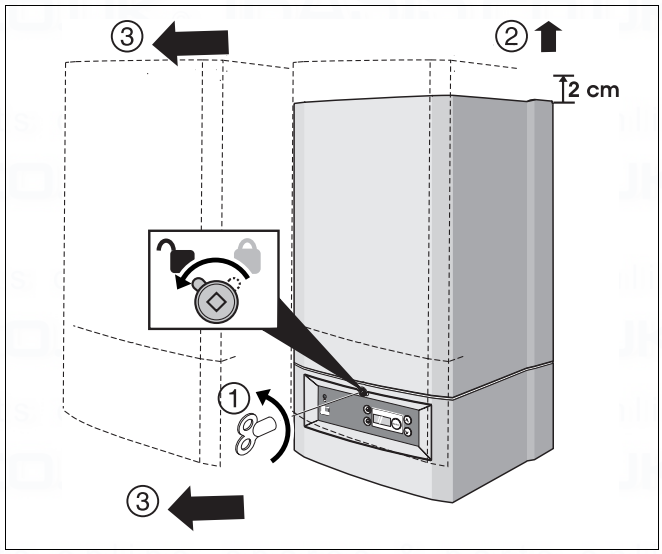

fig. 3 Remove casing

1.5 Water circulation system

The central heating system should be installed in accordance with **BS.6798** and, in addition, for smallbore and microbore systems, **BS.5449** or EN 12823.

1.6 Pipe connections

Pipework from the boiler is routed downwards as standard, but may be routed upwards behind the boiler using the wall spacing frame (supplied with the boiler).

- Connect pipes as shown in fig. 4. Ensure that all pipework is routed so as to minimise any strain on the boiler fittings.

Boulter Buderus advises to use copper piping for the first 600 mm, then it is allowed to switch to another approved pipe material.

CAUTION!

Do not use galvanised radiators or pipes.

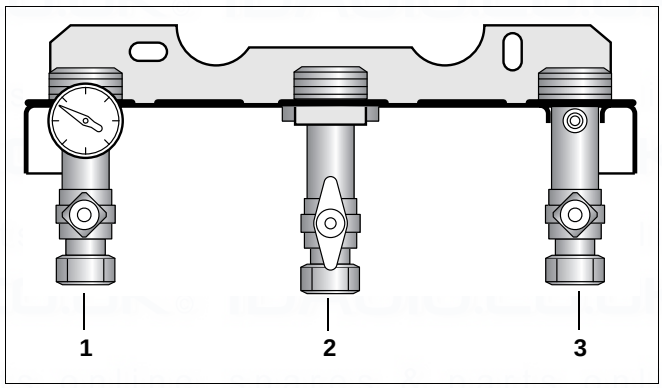

fig. 4 Pipe connections

Key to fig. 7:

1: *CH flow*

2: *Gas*

3: *CH return*

1.6.1 Gas Supply

The gas installation must be installed in accordance with **BS.6891**.

CAUTION!

Pipework from the meter to the boiler MUST be of adequate size, generally at least Ø22 mm.

The complete installation MUST be tested for gas tightness and purged as described in **IGE/UP/1b**.

1.6.2 Gas connection

- Connect to gas supply according to relevant standards.

1.6.3 Compression fitting pressure relief valve outlet

- Insert the small piece of pipe (fig. 5).
- Attach the compression fitting (fig. 6).

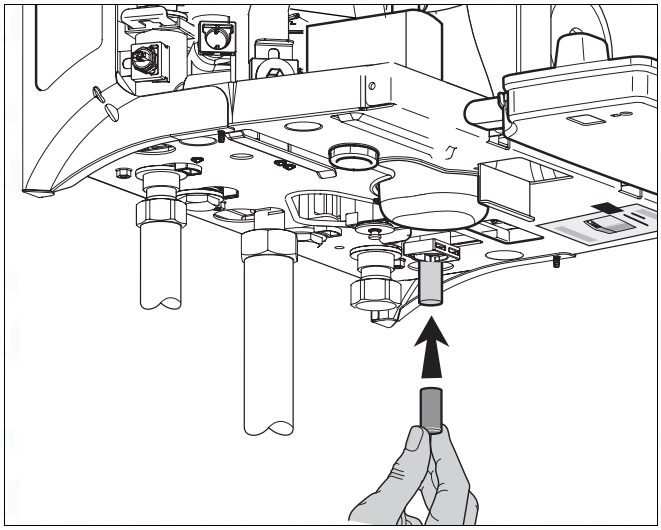

fig. 5 Insert pipe

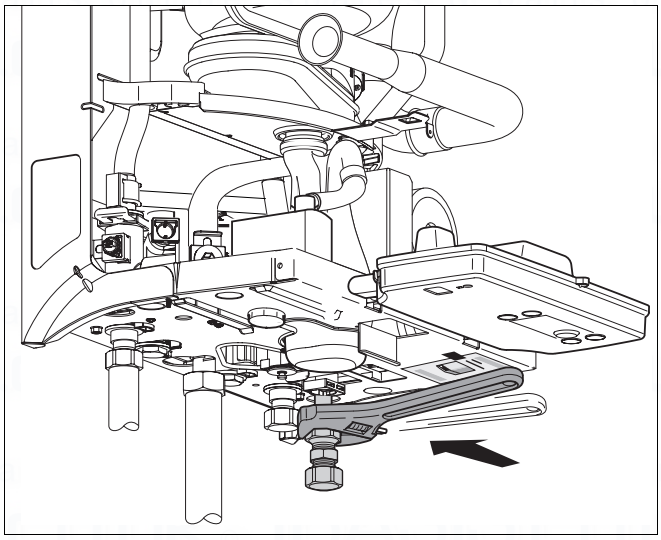

fig. 6 Compression fitting

1.6.4 Hot-water temperature

CAUTION!

DO NOT use galvanised pipes or fittings. The hot water heat exchanger is made of copper and is liable to suffer the effects of electrolytic corrosion.

NOTE

When using plastic pipes, observe the supplier's instructions - especially those referring to recommended jointing techniques and the notes relating to the heating system water on page 5.

- Connect pipes free of strain (fig. 4).

1.6.5 Condensate removal

Positioning and termination of the condensate drain pipe

The condensate pipe should be run and terminate internally to the house soil and vent stack or waste pipe. Alternatively, the condensate can be discharged into the rainwater system if connected to a foul water draining system, or into a purpose-made soak away (condensate absorption point).

All connecting drainage pipework should generally have a fall of at least 2.5° to the horizontal, or approximately 50 mm per metre of pipe run. If this is can not be achieved, consider the use of a condens pump.

If an external pipe run is unavoidable then the run should be insulated with water proof insulation limited to 3 m in length. Should this be exceeded then the pipework diameter should be increased to 32mm and the pipework insulated using weather proof materials.

WARNING!

Any external run must be insulated with water proof insulation.

It should be noted that the connection of a condensate pipe to a drain may be subject to local building controls.

Material for condensate

NOTE

Ensure that the condensate trap is filled with water.

The condensate drainage pipe should be run in a standard drain pipe material, e.g. PVC (polyvinyl chloride), PVC-U (unplasticized polyvinyl chloride), BS (acrylonitrile-butadienes-tyrene), PP (polypropylene polyprolene) or PVC-C (cross-linked polyvinyl chloride).

The condensate drain can be attached to the syphon (fig. 7).

Any internal pipework should be of a diameter to match the requirements of the condensate exit pipe on the appliance.

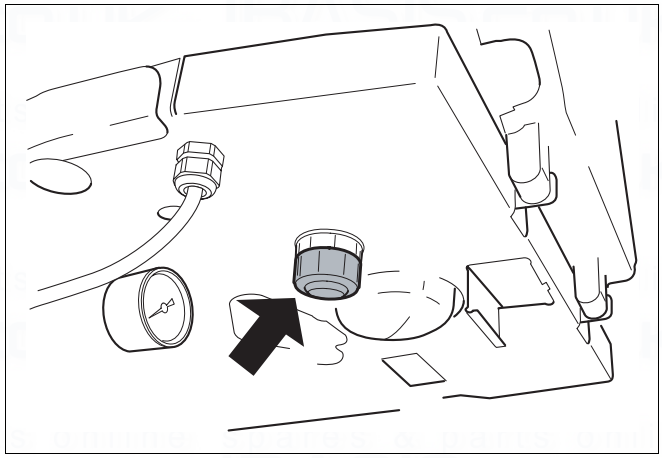

fig. 7 Condensate outlet

Internal termination to internal stack

The condensate drainage pipe should have a minimum outside diameter of 21.5 mm with no length restriction. It should incorporate a trap with a 75 mm condensate seal and be connected to the stack at a point at least 450 mm above the invert of the stack. **The trap built into the boiler will provide this 75 mm (fig. 8) condensate seal**.

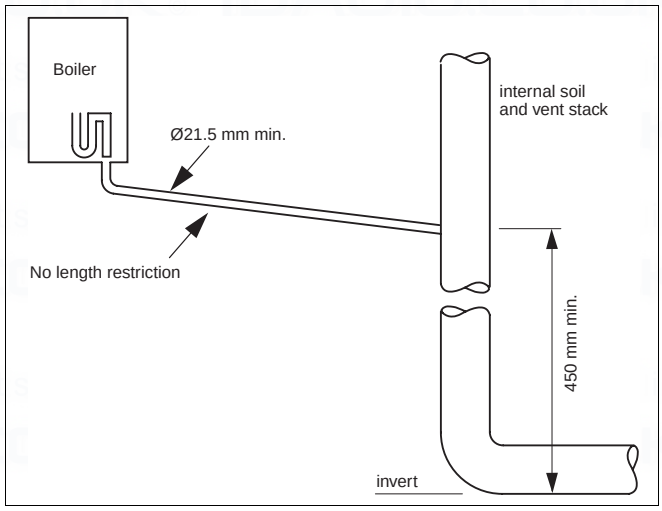

fig. 8 Internal termination of condensate drainage pipe to internal stack

External termination via internal branch (e.g. sink waste)

The condensate drainage pipe should have a minimum outside diameter of 21.5 mm with no length restriction. The connection should preferably be made downstream of the sink waste trap. If the connection is only possible upstream, then the air break is needed between the two traps. This is normally provided by the sink waste pipe (see fig. 9 and 10).

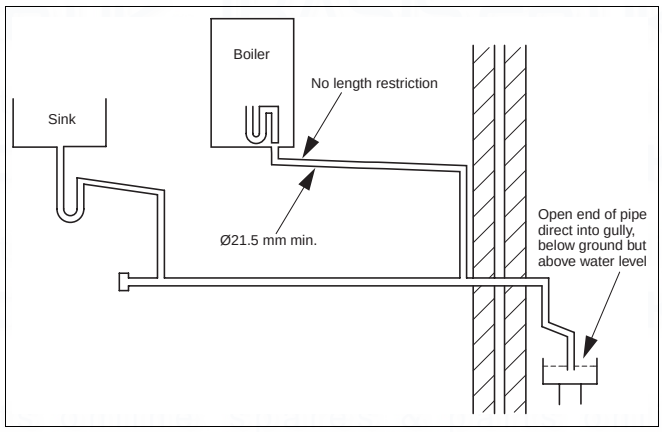

fig. 9 External termination of condensate drainage pipe via internal discharge branch (e.g. sink waste) and condensate syphon

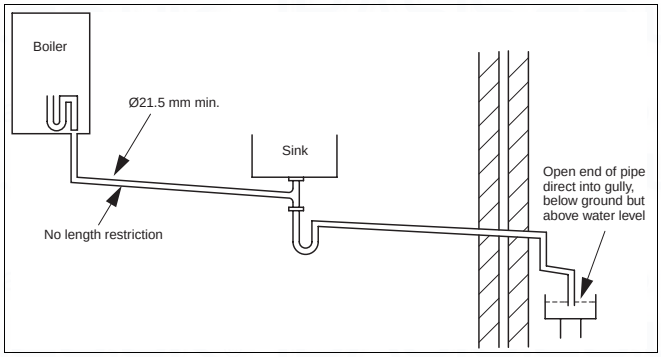

fig. 10 External termination of condensate drainage pipe via internal discharge branch (e.g. sink waste – proprietary fitting) and condensate syphon

Condensate absorption point

The condensate drainage pipe should have a minimum outside diameter of 21.5 mm and the external pipe length should not be more than 3 m. The condensate absorption point should be sited in a convenient position as close as possible to the boiler but not in the vicinity of other services. See fig. 11 for information.

NOTE

When discharging condensate to an outside drain caution must be taken to ensure blockage cannot occur during freezing conditions. If this is likely to occur, the use of a syphon trap is recommended.

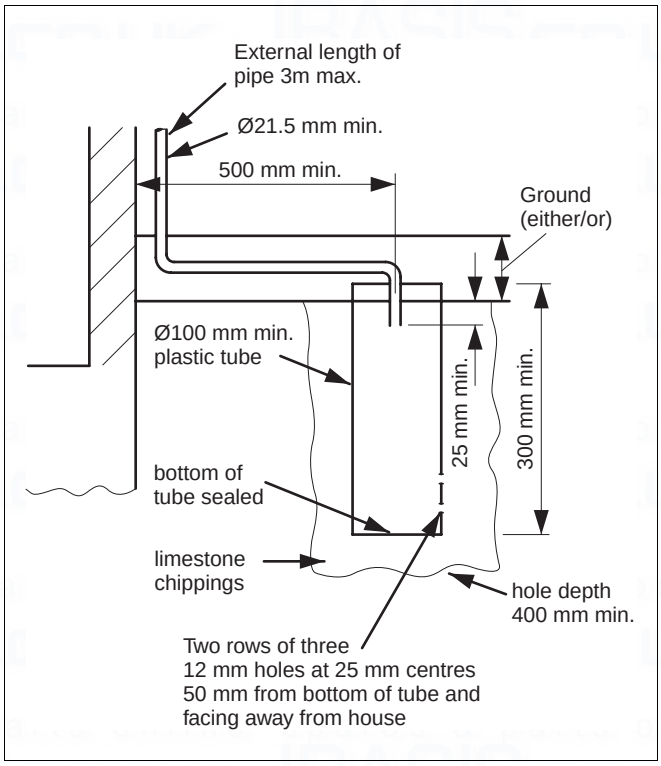

fig. 11 External termination of condensate drainage pipe to absorption point

1.7 Flue Installation

1.7.1 Siting the flue terminal

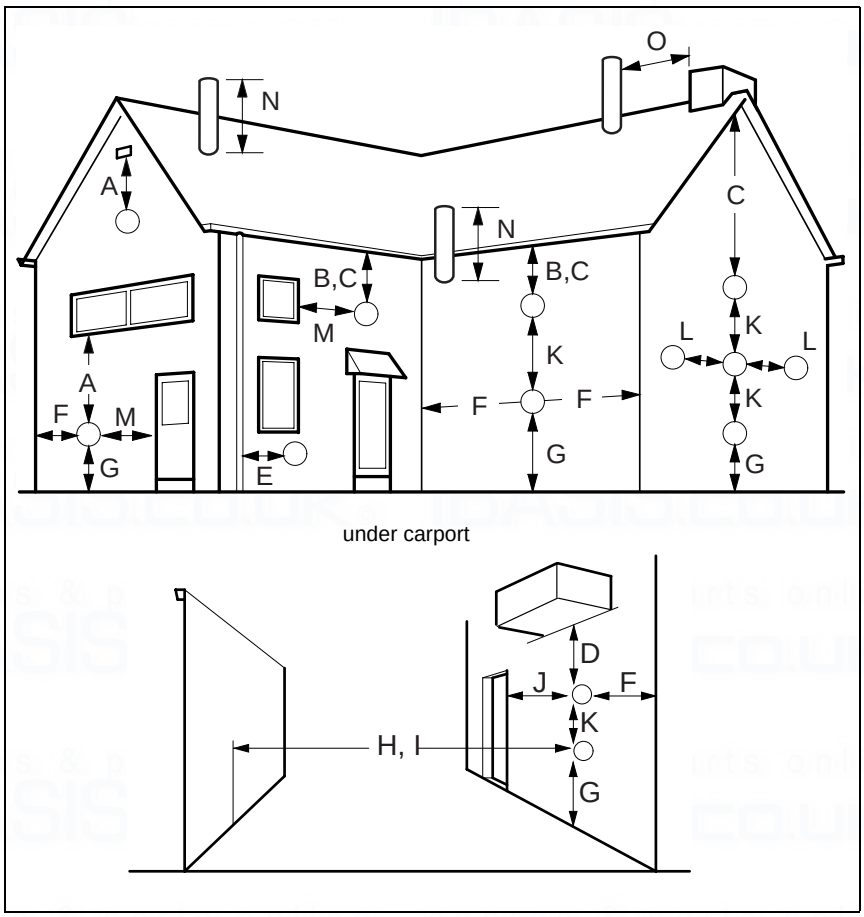

fig. 12 Flue terminal position

Terminal Position	Minimum Spacing
A. Directly below, above or alongside an opening window, air vent or other ventilation opening	300 mm
B. Below guttering, drain pipes or soil pipes	200 mm
C. Below eaves	200 mm
D. Below balconies or a car port roof **Not recommended!**	200 mm
E. From vertical drain pipes or soil pipes	150 mm
F. From internal or external corners	300 mm
G. Above adjacent ground, roof or balcony level	300 mm
H. From a surface facing the terminal	600 mm
I. From a terminal facing a terminal	1200 mm
J. From an opening in a car port (e.g. door or window) into dwelling. **Not recommended**!	1200 mm
K. Vertically from a terminal on the same wall	1500 mm
L. Horizontally from a terminal on the wall	300 mm
M. Adjacent to opening	300 mm
N. Above intersection with roof	300 mm
O. From a vertical structure on the roof	500 mm

table 1 Balanced flue terminal position

The flue must be installed in accordance with the recommendations of **BS. 5440-1:2000**.

Pluming will occur at the terminal so terminal positions where this could cause a nuisance should be avoided.

The air supply and the flue gas exhaust must meet the applicable general regulations. Please consult the instructions provided with the flue terminal kits prior to installation.

The boiler MUST be installed so that the terminal is exposed to external air.

It is important that the position of the terminal allows the free passage of air at all times.

Minimum acceptable spacing from the terminal to obstructions and ventilation openings are specified in table 1.

If the lowest part of the terminal is less than 2 metres above the level of the ground, balcony, flat roof or place to which any person has access, the terminal must be protected by a guard.

Ensure that the guard is fitted centrally.

The flue assembly shall be so placed or shielded as to prevent ignition or damage to any part of the building.

The air inlet/products outlet duct and the terminal of the boiler MUST NOT be closer than 25 mm to combustible material. Detailed recommendations on the protection of combustible material are given in **BS. 5440- 1:2000**.

NOTE

It is absolutely essential to ensure, in practice, that products of combustion discharging from the terminal cannot re-enter the building or any other adjacent building through ventilators, windows, doors, other sources of natural air infiltration, or forced ventilation/air-conditioning.

If this could occur the appliance MUST be turned off (with the owners permission), and labelled as unsafe until corrective action can be taken.

DANGER!

Only use Boulter Buderus flue gas systems. As other flue gas systems are not tested with this appliance.

1.7.2 Air supply and flue gas exhaust in a closed installation

A ventilation cover is integrated into the 500 Series condensing gas system boilers. This cover houses a number of components, such as the burner and the heat exchanger. Since this ventilation cover is part of the air supply system, it is vital that it is always installed correctly.

To ensure optimal operation, the 500 Series appliances must be connected to a Boulter Buderus horizontal or vertical flue terminal. These terminals have been developed specifically for Boulter Buderus condensing gas boilers and have been comprehensively tested for trouble free operation when correctly installed.

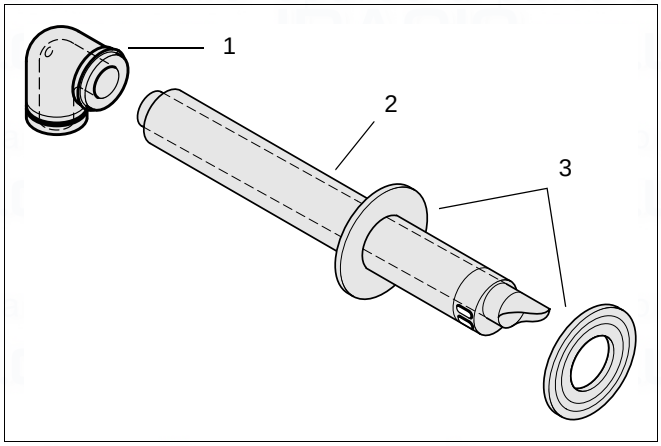

fig. 13 Standard horizontal flue pack

Standard horizontal flue pack (fig. 13):

- **item 1**: Flue turret 60/100;
- **item 2**: Horizontal flue terminal 60/100;
- **item 3**: Flue finishing kit.

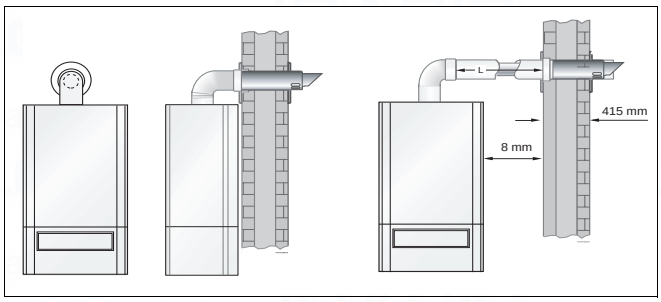

fig. 14 Side flue and rear flue installation

Standard vertical flue pack (fig. 15):

– **item 1**: Vertical flue terminal 60/100.
– **item 2**: Weather collar
– **item 3**: Flue support bracket
– **item 4**: Vertical flue adaptor

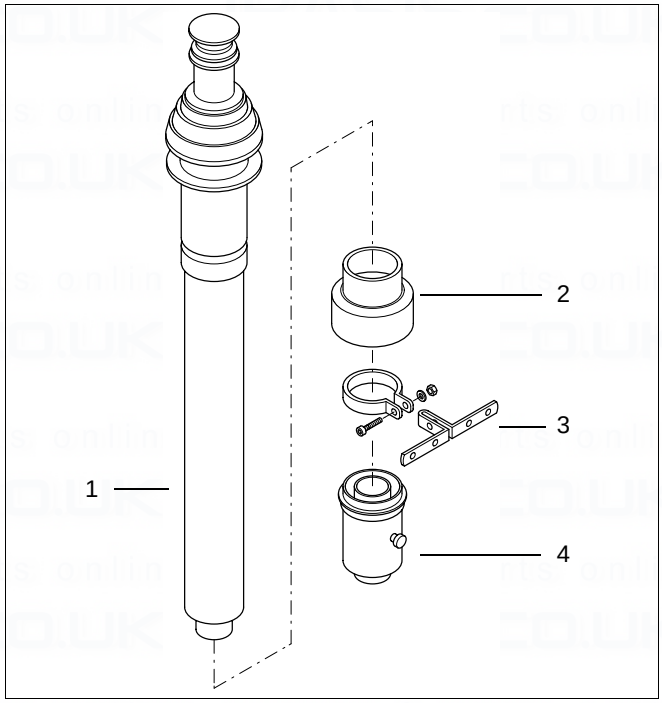

fig. 15 Standard vertical flue pack

1.7.3 Maximum Flue length (L)

The maximum pipe length (L) of the air supply and flue gas exhaust pipes for the 500 Series condensing gas system boilers is determined by the total pressure loss of all components in the flue gas exhaust / air supply system.

Maximum length of horizontal or vertical extensions for 60/100 flue system is L = 12 m. Maximum length of horizontal or vertical extensions for 80/125 flue system L = 35 m (see fig. 16 and fig. 17).

Take the flue pipe clearances into account when planning the layout of the place of installation (see subsection 1.7.1: "Siting the flue terminal" on page 15).

Maximum wall thickness without extensions is 415 mm. Maintain a minimum side clearance of 8 mm (see fig. 14).

Flow pressure available for use [Pa]	
Buderus 500 - 24/S	75

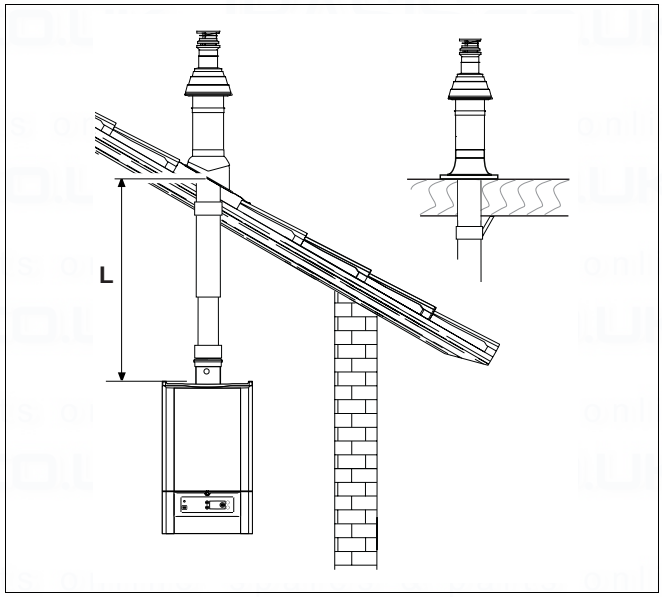

fig. 16 Vertical flue length

1.7.4 Additional flue parts

The additional flue parts listed can be ordered from your supplier.

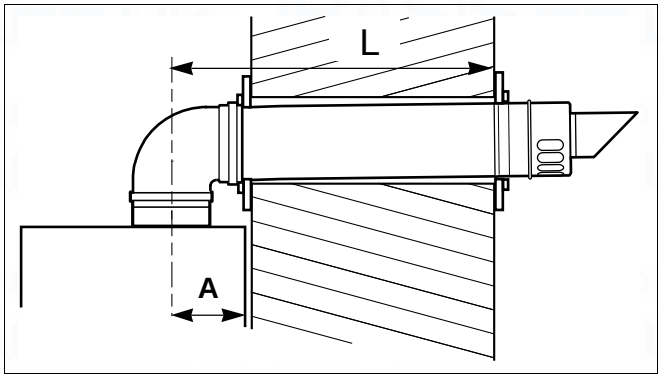

fig. 17 Horizontal flue length

Flue size 60/100:

60/100 flue system	For every bend or extension the max. flue length (L) has to be reduced by:
500 mm extension	0.5 m
1000 mm extension	1.0 m
90° bend	1.4 m
45 bend	0.7 m

NOTE

The total reduction length must never exceed the maximum flue length.

Flue size 80/125 (optional):

80/125 flue system	For every bend or extension the max. flue length (L) has to be reduced by:
500 mm extension	0.5
1000 mm extension	1.0
90° bend	1.6
45 bend	0.9

NOTE

Vertical adaptor (60/100 --> 80/125) is required for 80/125 flue gas systems, because the flue outlet of the boiler is 60/100.

Weathering slates for 60/100 and 80/125

Flat roof, pitched roof.

1.7.5 Standard 100 mm flue systems

The standard concentric flue system provides for a max. horizontal straight length of upto 12.0 m for 60/100 flue connection (see subsection 1.7.3).
Full instructions for fitting this flue are in subsection 1.7.8: "Installation of the horizontal flue" on page 20.

IMPORTANT

Any horizontal flue system fitted to a condensing boiler must be inclined towards the appliance at an angle of 30 mm per metre length to prevent condensate dripping from the flue terminal.
This means that the clearance above the appliance must be increased to match the duct length. See figure on page 9.

NOTE

When using a wall spacing frame, don't forget to take its measurements into account when designing a flue system.

1.7.6 Connecting the vertical flue adaptor

- Fit the vertical flue adaptor (fig. 18) onto the appliance flue connector.

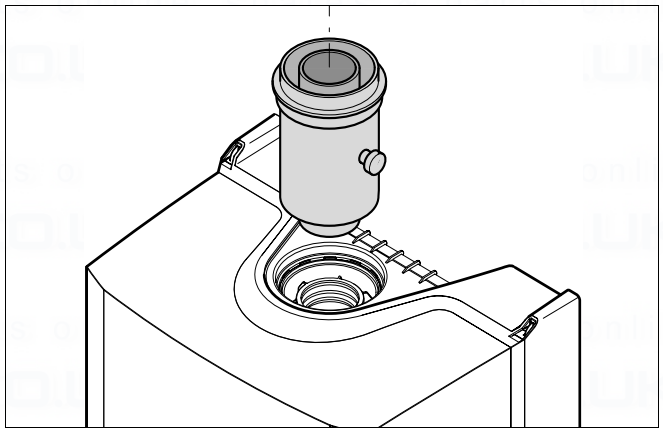

fig. 18 Vertical flue adaptor

1.7.7 Connecting the horizontal flue turret

- Fit the horizontal flue turret (fig. 19) onto the appliance flue connector.

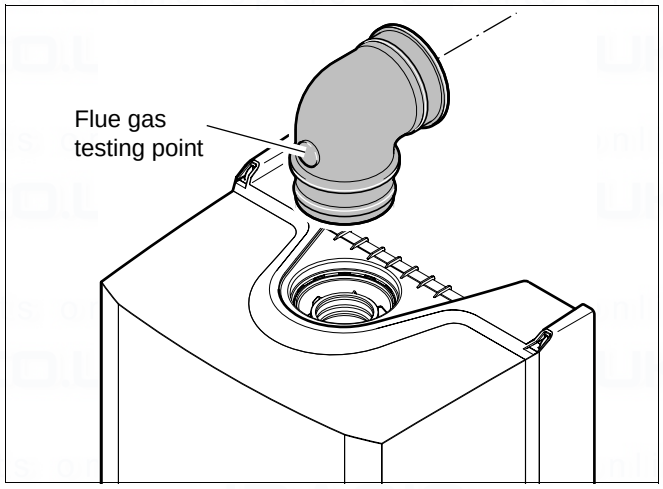

fig. 19 Horizontal flue turret with flue gas testing point

1.7.8 Installation of the horizontal flue

The standard flue is suitable for lengths upto 660 mm (see fig. 20). For longer flue runs upto 12.0 m, extension air/flue ducts are available.

NOTE

Use the wall-mounting template to help you mark the position of the side flue opening

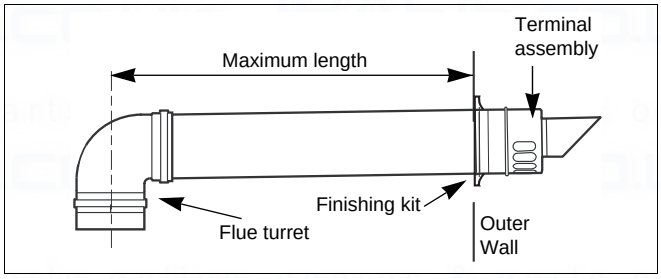

fig. 20 Installation with horizontal flue gas turret

1.7.9 Flue duct preparation and assembly

- Measure the flue length L. Refer to figures 21 and 22.

NOTE

The flue must be inclined from the boiler.

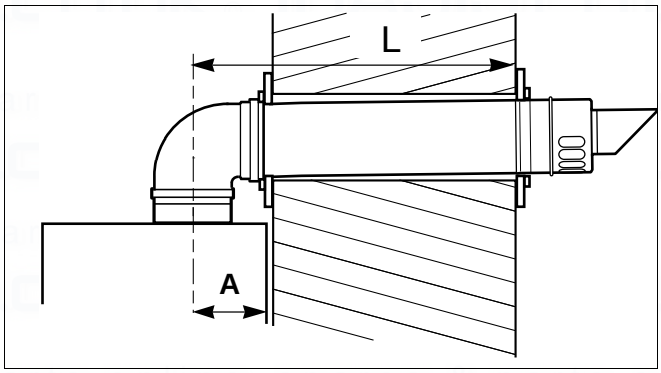

fig. 21 Flue length - rear

Item A = 150 mm without the use of a wall spacing frame

Item A = 185 mm with the use of a wall spacing frame

- Mark off the lengths shown onto the ducts and cut the length. The cuts must be square and free from burrs. Terminal assembly outer (air) duct - L-70 mm, inner (flue) duct - L-50 mm. The measurement is made from the ridge at the terminal indicating the outer face of the wall. Refer to figure 23.
  Extension air duct - L-70 mm, flue duct - L-50 mm. The measurement is from the formed end.
- Assemble flue system completely. Push the ducts fully together. The slope of the terminal outlet must be face downwards (see fig. 23, item 1).
  The assembly will be made easier if a solvent free grease is lightly applied to the male end of the ducts.

NOTE

An inner flue finishing kit is provided which should be fitted to the ducts before assembly.

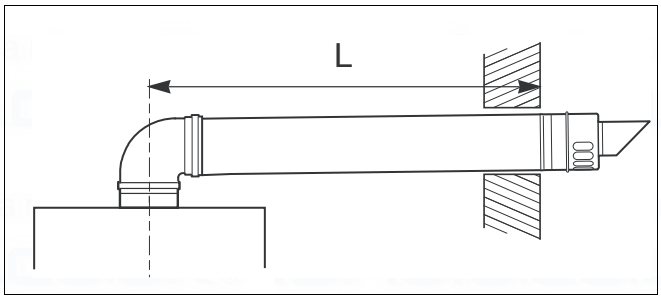

fig. 22 Flue length - side

- Push the assembly through the wall and slide the turret onto the flue connector. Refer to figure 19. Ensure that the turret is fully entered into the socket on the boiler.
- From the outside fix the flue finishing kit to the terminal and, after ensuring the duct is properly inclined towards the boiler, fix the finishing kit to the wall.
  If the terminal is within 2 m of the ground where there is access then an approved terminal guard must be fitted. The guard must give a clearance of at least 50 mm around the terminal and be fixed with corrosion resistant screws.

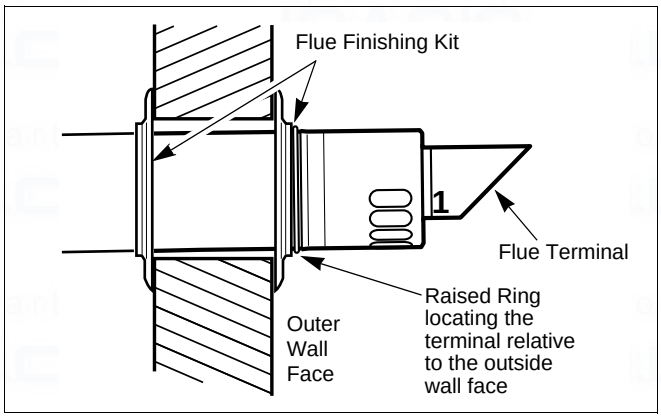

fig. 23 Flue terminal position

1.8 Electrical connections

1.8.1 Mains connection

NOTE

All Boulter Buderus boilers require a permanent live.

A mains supply of 230 V - 50Hz is required.

External controls are suitable for volt free or 230 V installation.

Wiring to the boiler MUST be in accordance with the current I.E.E. (**BS.7671**) Wiring Regulations and any local regulations.

Wiring should be a 3 core PVC insulated cable, not less than 0.75 mm^2 (24 x 0.2 mm), and to table 16 of **BS.6500**.

Connection must be made in a way that allows complete isolation of the electrical supply such as a double pole switch having 3 mm contact separation in both poles, or by a three pin connector, serving only the boiler and system controls. This boiler is equipped with a double pole switch see fig. 24, item 1. The means of isolation must be accessible to the user after installation.

The electrical connection to the mains supply should be readily accessible and adjacent to the boiler.

If the supply cord is damaged, it must be replaced by a registered Corgi installer to avoid a hazard and must be an original spare part.

The electrical supply for both the boiler and the system must be taken from the same fused spur outlet.

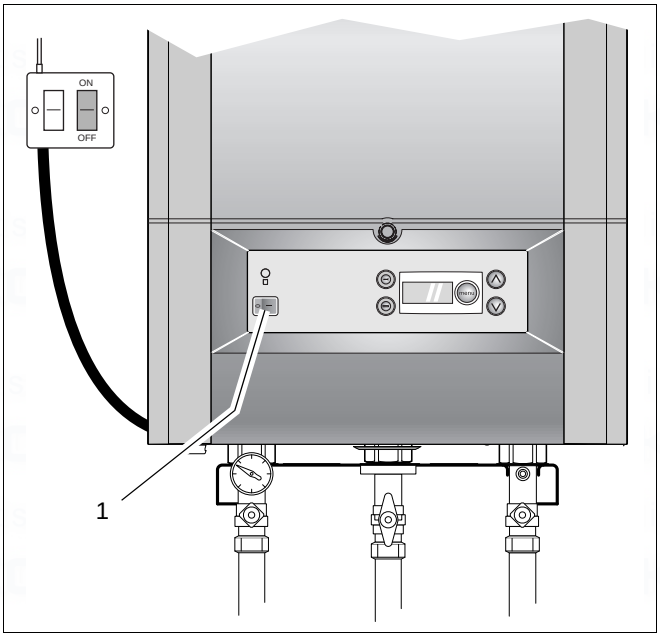

fig. 24 DBA

WARNING!

Do not connect 230V to the connection block on the back of the DBA.

1.9 DBA wiring diagram

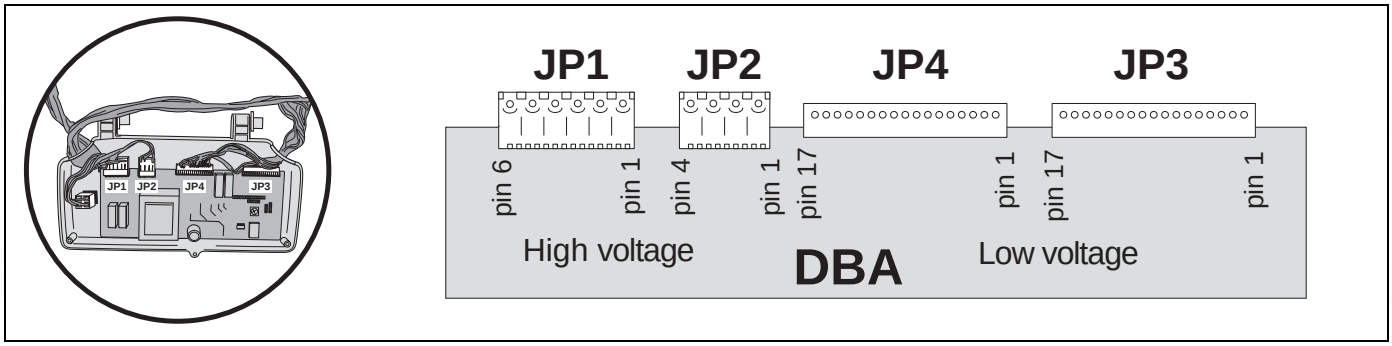

WARNING!

Do not connect 230V to the connection block on the back of the DBA.

1.10 Electrical wiring diagram

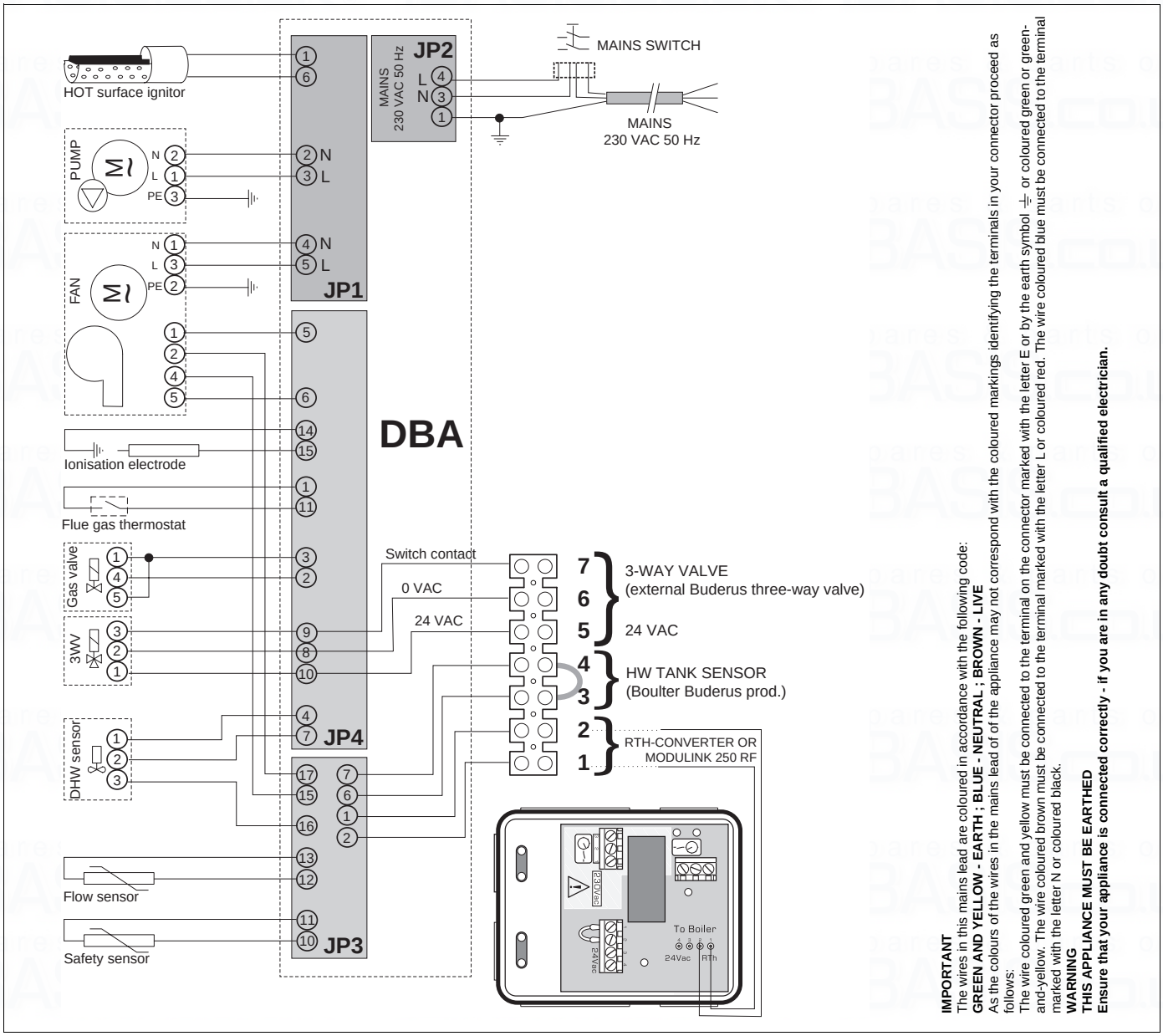

1.10.1 DBA connection block terminals

The possible terminals are (fig. 25):

– Terminal 1 and 2 are in use for the rth-converter or used for the ModuLink 250 RF thermostat.
– Terminal 3 and 4 are used for connecting a sensor for the hot water cylinder. **This is only for the Buderus 500-24/S** with an external hot water cylinder. Only remove the wire bridge when installing a hot water cylinder.
– Terminal 5, 6 and 7 are used for an external Buderus 3-way valve (see subsection 1.10: "Electrical wiring diagram" on page 22).

WARNING

DO NOT connect 230V to the DBA connections.

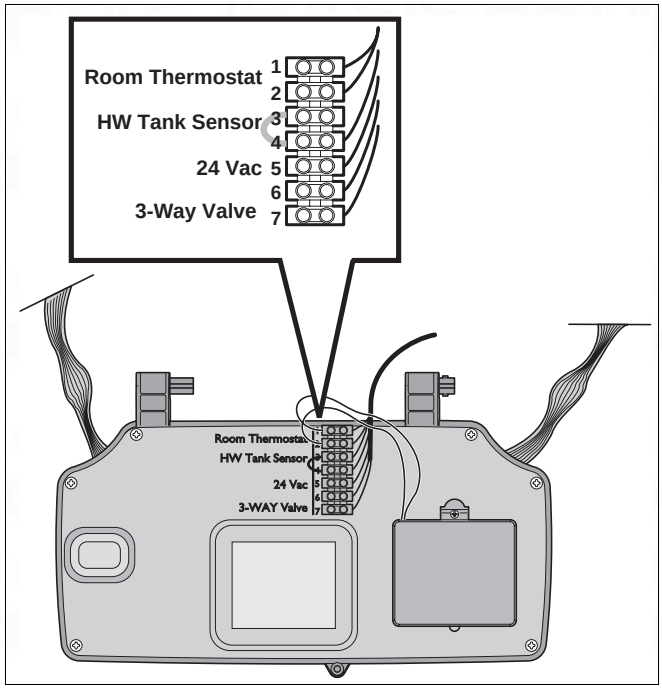

fig. 25 Connections backside DBA

item 1, 2: Boulter Buderus control
item 3, 4: Boulter Buderus cylinder valve
item: 5, 6, 7: Diverter valve

1.10.2 External 230V controls

The wall-mounted condensing gas system boiler can be fitted with the following external controls.

– a ModuLink 250 RF (see subsection 1.10.3) or other recommended Boulter Buderus 24V controls;
– a room-temperature control device at 230V connected to the rth-converter (see subsection 1.10.4, S-plan and Y-plan);
– or an ON/OFF temperature controller, volt free (see subsection 1.10.5).

1.10.3 ModuLink 250 RF connection

The ModuLink 250 RF thermostat modulates on room temperature.

The Buderus 500-24/S boilers work most efficient with Boulter Buderus thermostats. Therefore these thermostats are recommended by Boulter Buderus.

NOTE

See the instructions of the other Boulter Buderus thermostats for installation instructions.

Receiver bracket installation

NOTE

The receiver is not waterproof. Avoid water coming into contact with the receiver when servicing the boiler.

- Remove the casing of the receiver (fig. 26, item 1).

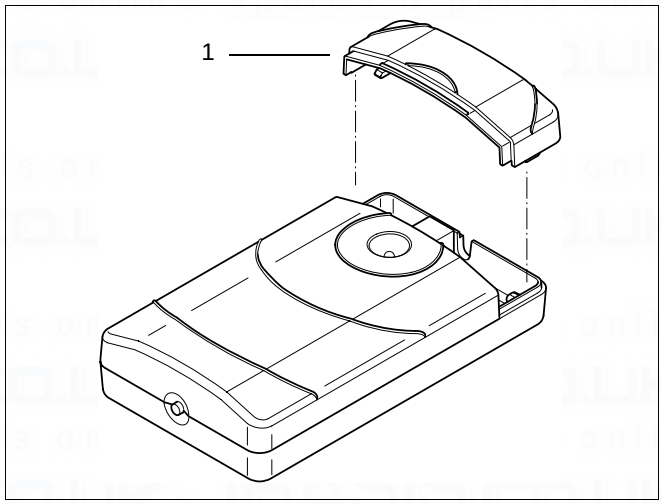

fig. 26 Receiver bracket

- Connect the thermostat's cable (supplied with the thermostat) to the receiver (fig. 27).
- Refit the casing (fig. 27, item 1).

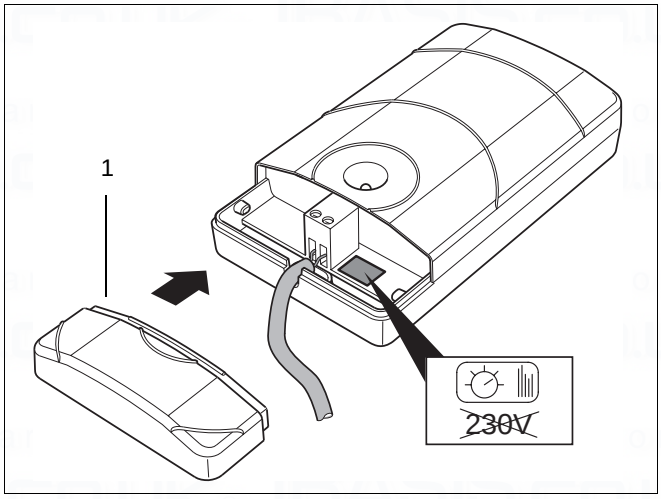

fig. 27 Connect cable

- Slide the receiver into the bracket (supplied with the boiler) so that it is secured (fig. 28).

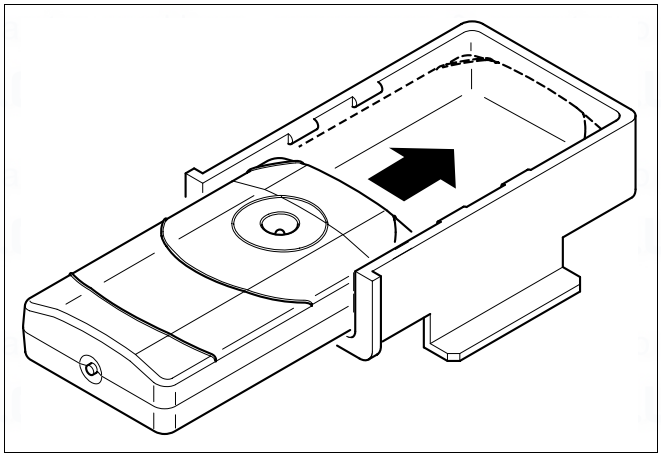

fig. 28 Place receiver into bracket

- Remove the boiler's casing.

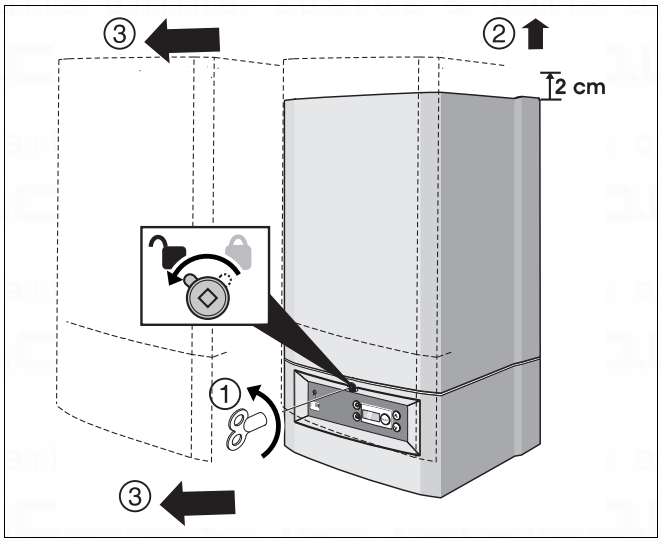

fig. 29 Remove casing

- Remove the user manual.
- Slide the receiver in the guide rails on the bottom part of the boiler (fig. 30).
- Fold the user manual and place between the frame and the receiver bracket.

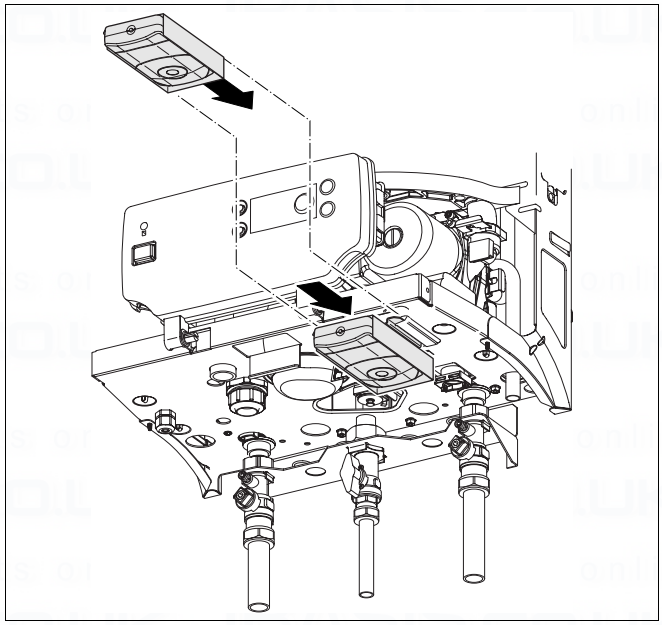

fig. 30 Place receiver

- Connect the black pre-wired lead to a permanent live supply (from the same fused isolator as all other controls on the heating system), L N E (fig. 24).
- Remove the securing screw of the DBA and lower the DBA (see fig. 31).

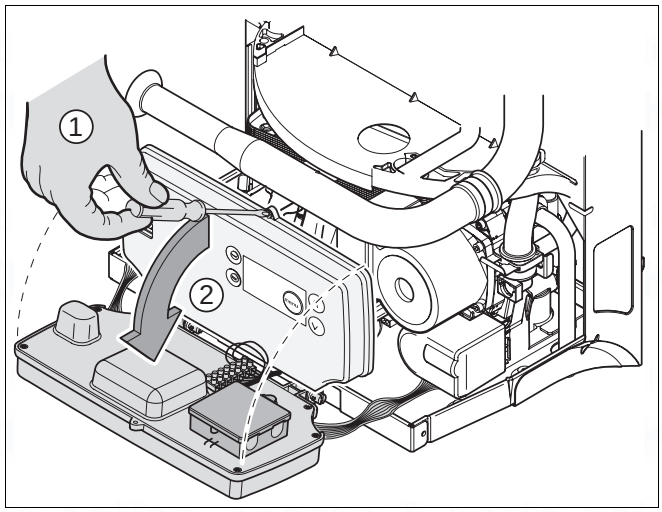

fig. 31 Lower the DBA

- Disconnect the twin cable of the rth-converter from terminal 1 and 2 of the connection block (see fig. 32, item 1) on the back of the DBA.
- Connect the cable of the ModuLink 250 RF receiver to terminal 1 and 2 of the room thermostat connection on the back of the DBA (see fig. 32, item 1).

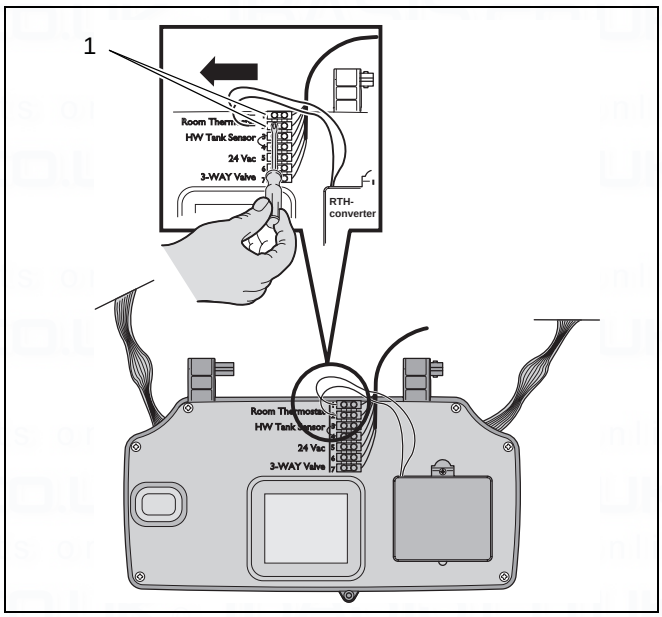

fig. 32 Room thermostat connection on DBA

1.10.4 External 230V controls (see also Y-plan and S-plan on page 28 and 29)"

WARNING!

This appliance must be earthed.

- Connect the black pre-wired lead to a permanent live supply (from the same fused isolator as all other controls on the heating system), L N E (fig. 24).
- Remove the securing screw of the DBA and lower the DBA (see fig. 31).
- Remove the cover of the rth-converter (fig. 33, item 1).
- Feed the 230V switch live and neutral (from external controls) through the cable gland.
- Identify the 230V terminal block by the shaded area and 230V label.
- Connect the switch live to terminal "1" and a neutral to terminal "2" (fig. 33, item 2).
- Replace covers.

NOTE

Terminal 3 (fig. 33, item 2) is not used.

1.10.5 Volt free external control device connection

- Connect the black pre-wired lead to a permanent live supply (from the same fused isolator as all other controls on the heating system), L N E (fig. 24).
- Remove the securing screw of the DBA and lower the DBA (see fig. 31).
- Remove the cover of the rth-converter (fig. 33, item 1).
- Lead the control device wire through the cable lead.
- Fix the wire to terminal 1 and 2 of the volt free connection (fig. 33, item 3).

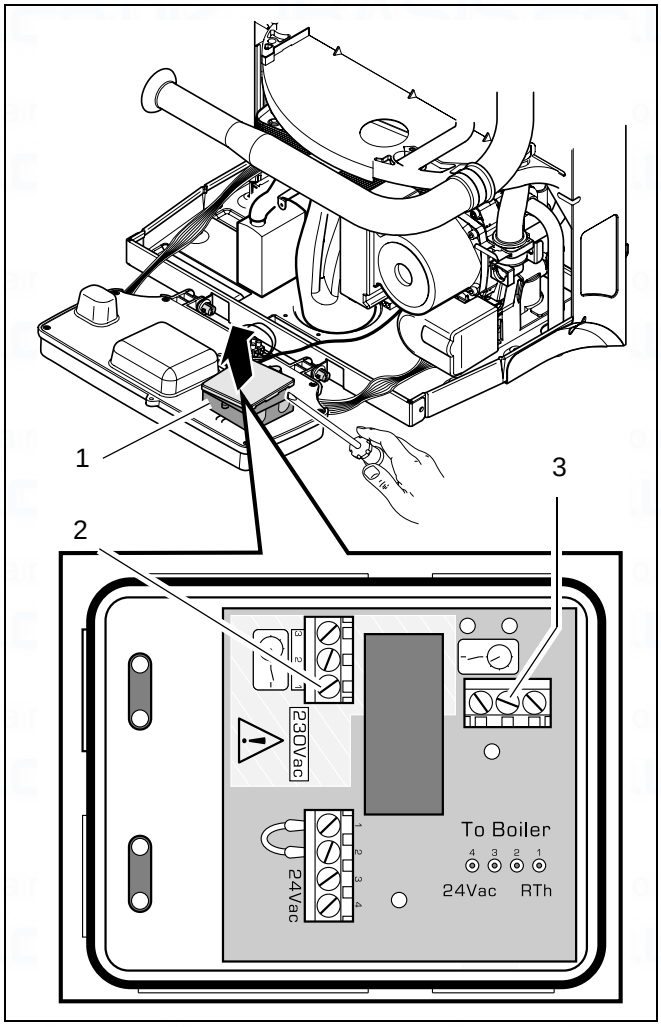

fig. 33 Connection box - 230 Volt and Volt free connection

1.11 System examples

NOTE

Example systems are to be regarded as schematic representations only.

Buderus 500-24S with ModuLink 250 RF or other Boulter Buderus controls

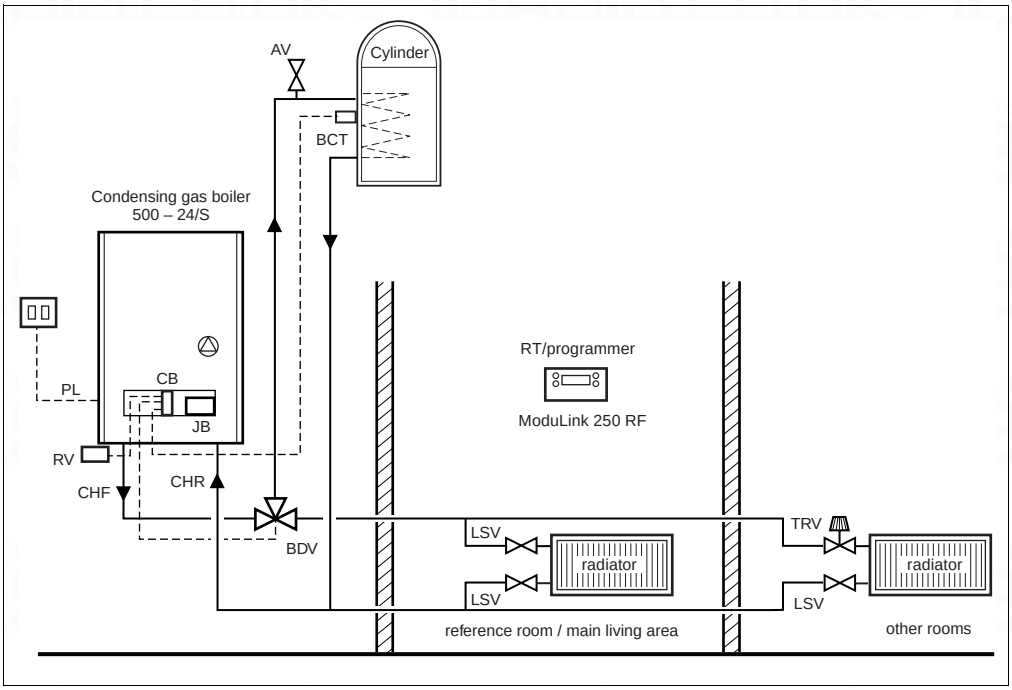

Key to abbreviations:

AV = Air Vent
BCT = Boulter Buderus cylinder thermostat
BDV = Boulter Buderus diverter valve
CB = Connection Block
CHF = Central Heating Flow
CHR = Central Heating Return
JB = Junction Box / RTH Relay
LSV = Lockshield Valve
PL = Permanent Live
RT = ModuLink 250 RF
RV = ModuLink 250 RF Receiver
TRV = Thermostatic Radiator Valve

fig. 34

CAUTION!

The BCT and BDV are Boulter Buderus products.

Buderus 500-24S with external 230V connection (Y-plan ; see fig. 35 and 36)

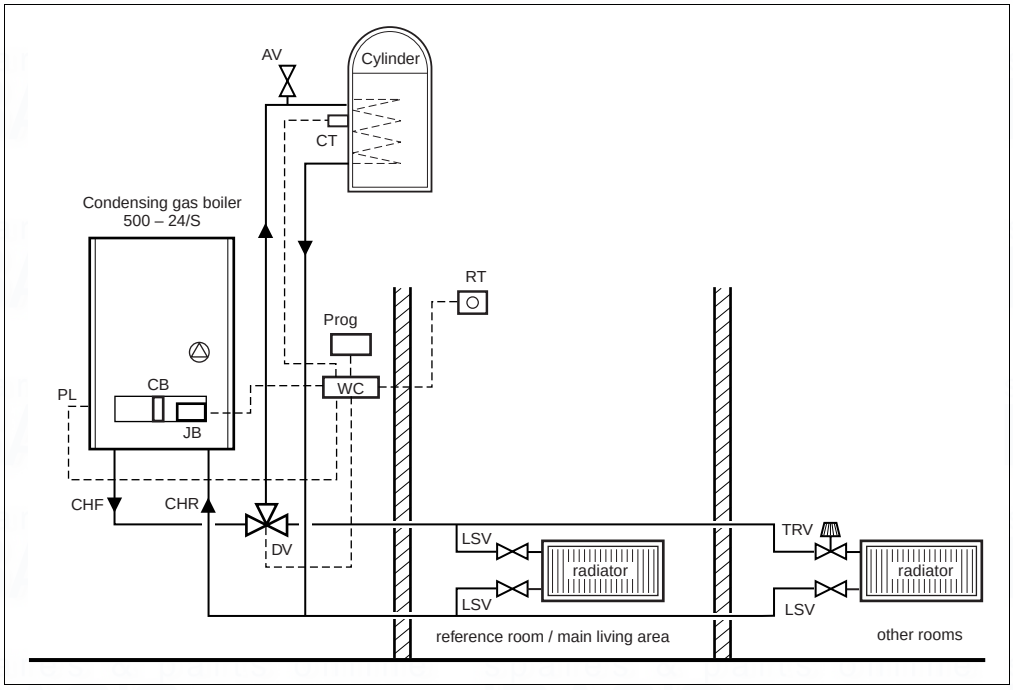

Key to abbreviations:
AV = Air Vent
CB = Connection Block
CHF = Central Heating Flow
CHR = Central Heating Return
CT = Cylinder Thermostat
DV = Diverter Valve
JB = Junction Box / RTH Relay
LSV = Lockshield Valve
PL = Permanent Live
Prog = Programmer
RT = Room Thermostat
TRV = Thermostatic Radiator Valve
WC = Wiring Centre

fig. 35

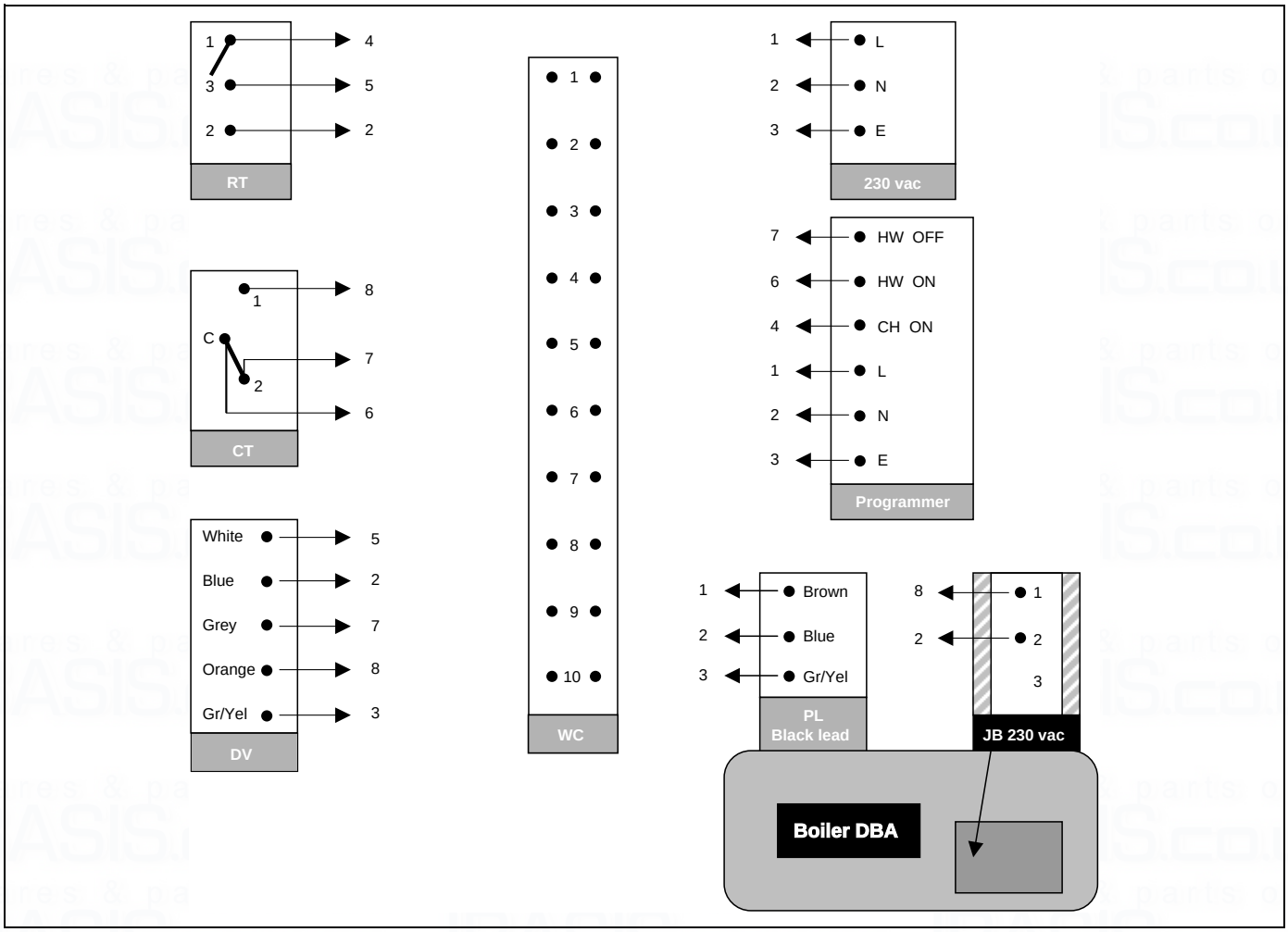

fig. 36 Wiring diagram Y-plan with exernal 230V controls

Buderus 500-24S with external 230V connection and two port zone valves (S-plan ; see fig. 37 and 38)

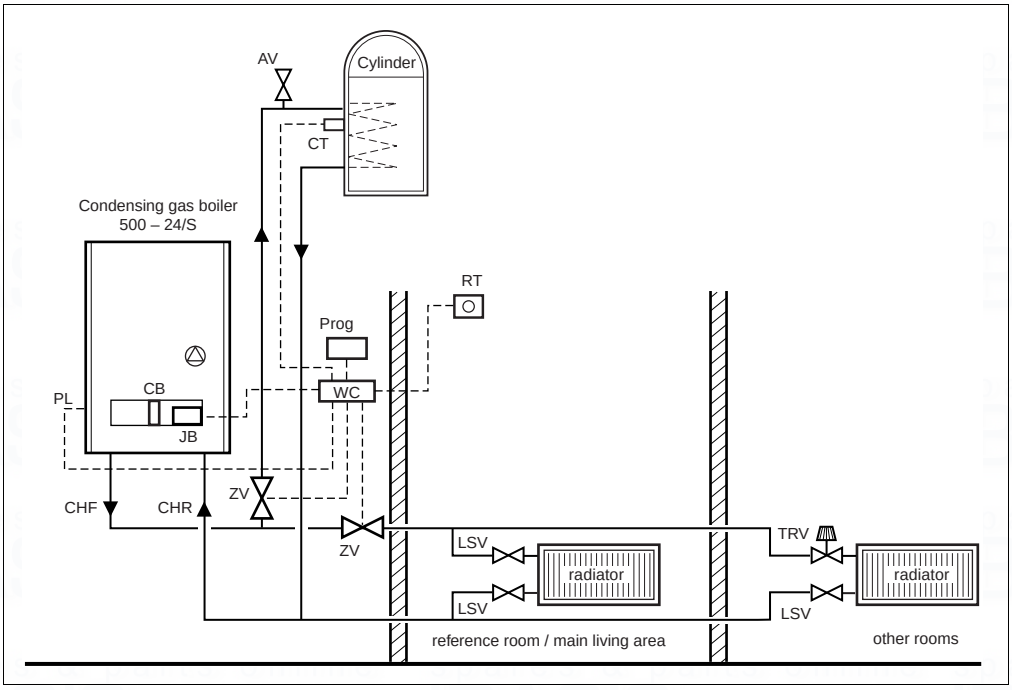

Key to abbreviations:
AV = Air Vent
CB = Connection Block
CHF = Central Heating Flow
CHR = Central Heating Return
CT = Cylinder thermostat
JB = Junction Box / RTH Relay
LSV = Lockshield Valve
PL = Permanent Live
Prog = Programmer
RT = Room thermostat
TRV = Thermostatic Radiator Valve
WC = Wiring Centre
ZV = Two port Zone Valve

fig. 37

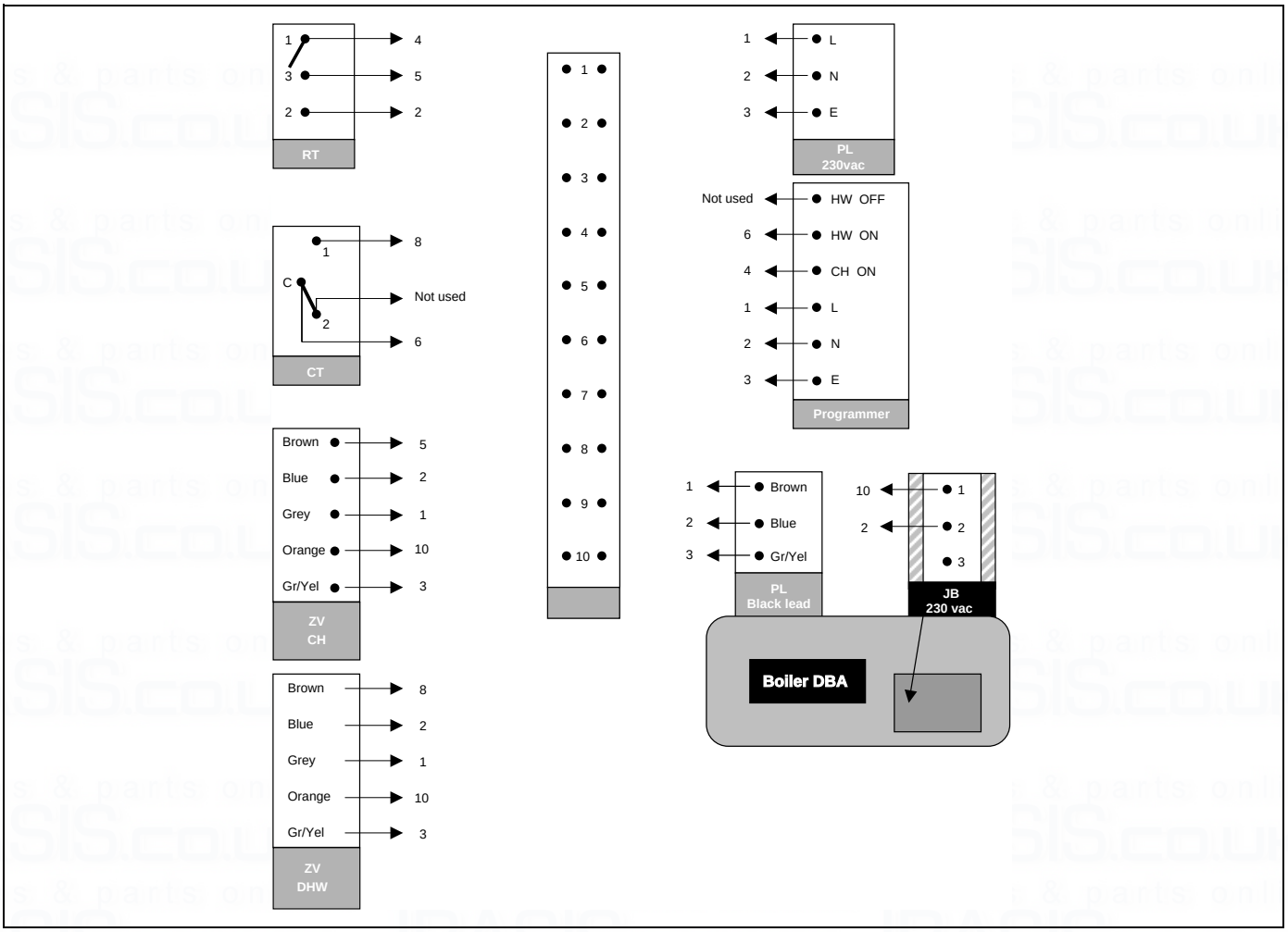

fig. 38 Wiring diagram S-plan with external 230V controls and two port zone valves

2 Commissioning

When a boiler starts up there are a couple of things that happen. Below is a short process description:

When there is a heat demand:

The fan starts up and the glow ignitor turns on.

When there is a DHW request then the three-way-valve switches from CH operation to DHW operation.

The pump starts up as soon as the three-way-valve is in the right position.

Once all the requirements are met (glow ignitor is hot enough, fan is operating at the correct speed and the pump is on) then the gas valve will open.

Now a flame may or may not develop, but the glow ignitor extinguishes. A flame will establish and the glow ignitor extinguishes. The operating controls are released once a flame is sensed. After a possible check, the boiler will deliver the requested output.

Should the flow check fail, the boiler will shut down for a short while and then try to start up again.

If no flame develops then the gas valve closes and the fan continues to run to post purge. The boiler will try to start up three times. If there still is no flame developing after three times, then the boiler will lock-out.

When the heat demand stops:

The gas valve closes.

The fan will keep going for a short while to post purge the appliance.

The pump will continue for a while to disperse any remaining heat energy from the boiler to the heating system.

If there has been a heat request then the three-way-valve will switch back to the central heating setting.

Follow the steps described in this chapter to properly commission the boiler and fill out the commissioning log book.

NOTE

If a fault occurs, then refer to the servicing manual or contact Boulter Buderus.

2.1 Preparing the boiler for operation

CAUTION

DO NOT operate the condensing gas boiler if large amounts of dust are present, e.g. due to building work in and around the place of installation.

2.1.1 Fill the heating system

WARNING!

The wall-mounted condensing gas system boiler must not be activated at this stage.

- Loosen the automated air vent one turn (fig. 39).

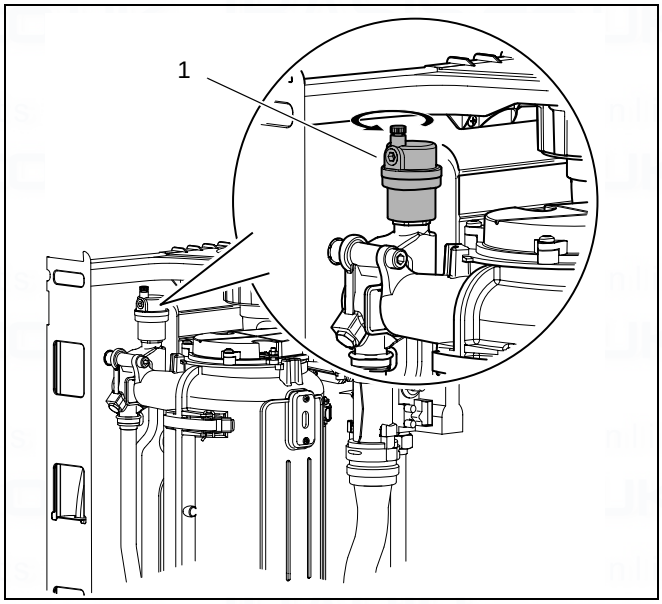

fig. 39 Automatic air vent

- If necessary open the CH flow and CH return servicing valves (fig. 40, item 1 and 2).

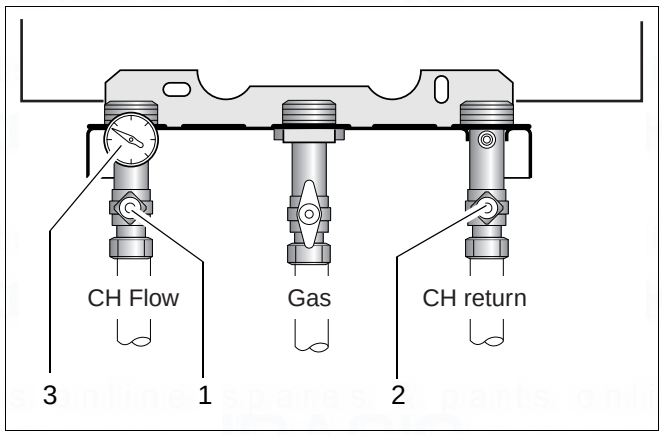

fig. 40 servicing shut off valves

- Connect filling loop (fig. 41).
- Open both stop valves (fig. 41).
- Fill the system to a pressure of approx. 1.5 bar (fig. 40, item 3).
- Shut both stop valves.
- Disconnect the filling loop.
- Vent all radiators from air starting with the lowest radiator and working your way up to the highest point.
- Check the pressure after venting. If the pressure has dropped under 1.0 bar then top up the system as described previously.
- Disconnect the filling loop and cap off.

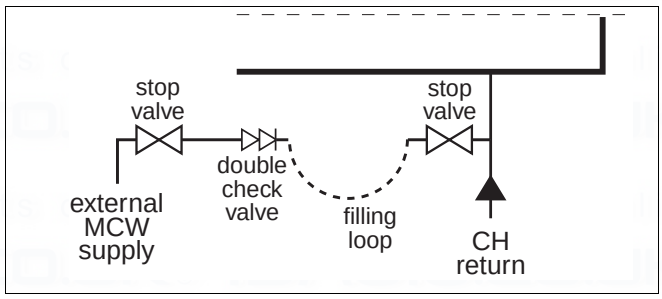

fig. 41 Connecting filling loop

To drain the boiler take the following steps:

- Close the CH return valve.
- Connect drainage hose (fig. 42).
- Close the CH return and CH flow valves.
- Connect draining hose to draining point on the manifold (fig. 42, item 1).
- Open draining point to drain the boiler (fig. 42, item 1).

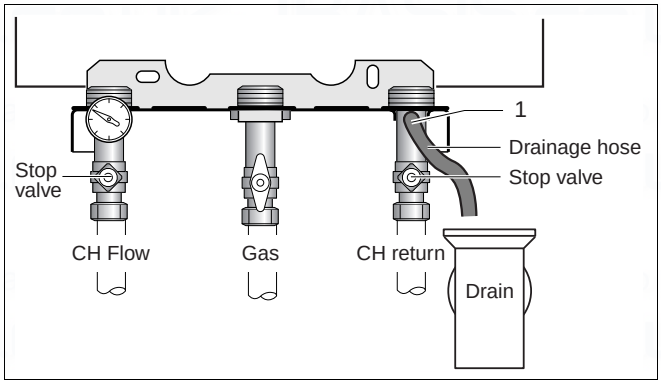

fig. 42 Draining the boiler

Fill the condensate trap

- Remove the condensate trap and fill with water (see fig. 43 and fig. 44).

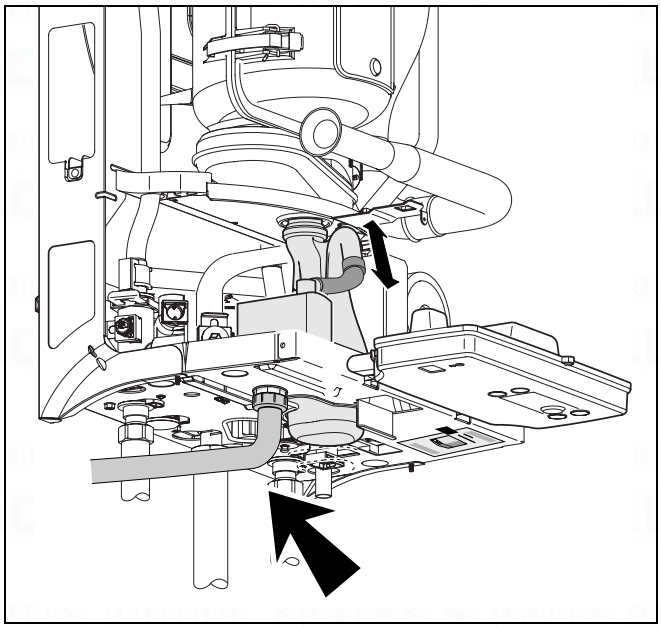

fig. 43 Disconnect hose from condensate trap

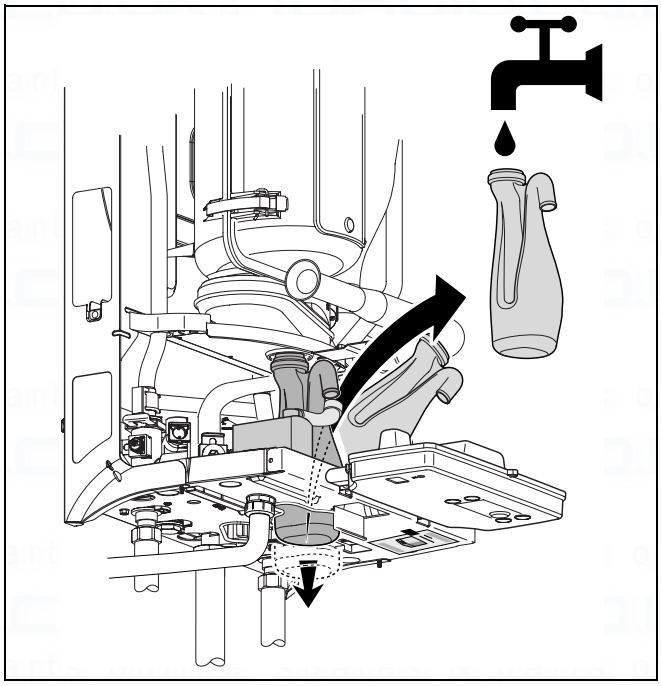

fig. 44 Remove the condensate trap and fill with water

2.1.2 DBA adjustments

The boiler is equipped with a DBA. This is the internal control of the boiler. The DBA is located behind the access panel.

The DBA allows you to operate the boiler and to make adjustments in its settings.

DBA overview:

1. Mains switch (see fig. 45)

Use this switch to turn the boiler on or off.

2. Reset button "B" (see fig. 45)

When a blinking code is in the display, it is possible to try and restart the boiler by pressing this button.

NOTE

It is not possible to reset the boiler when there is no fault code blinking in the display.

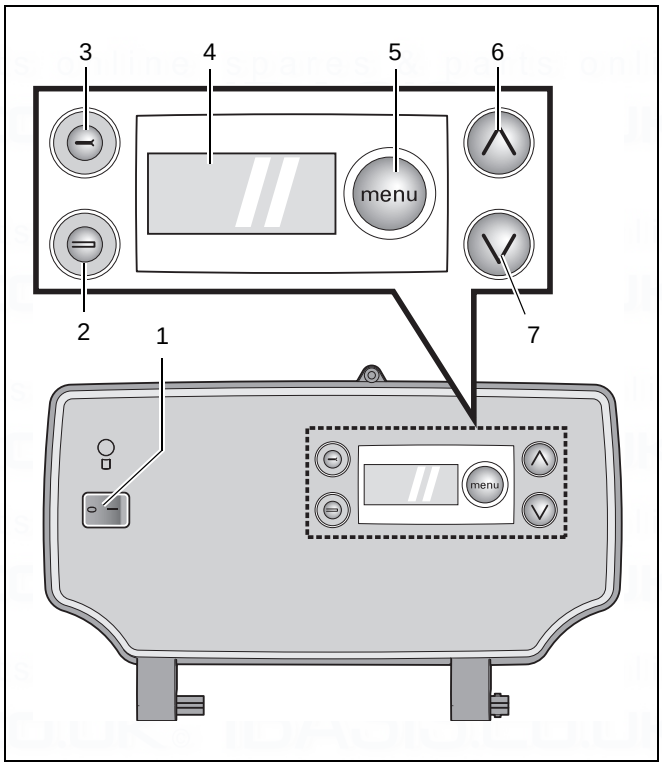

fig. 45 DBA

item 1: mains switch
item 2: "reset" button
item 3: "service" button
item 4: display
item 5: "menu" button
item 6: adjusting arrow up
item 7: adjusting arrow down

3. Service Button "A" (see fig. 45)

The boiler will operate on partial load when the Service button "A" is pressed once. An open-end spanner "F" appears in the top left hand corner of the display (fig. 46).

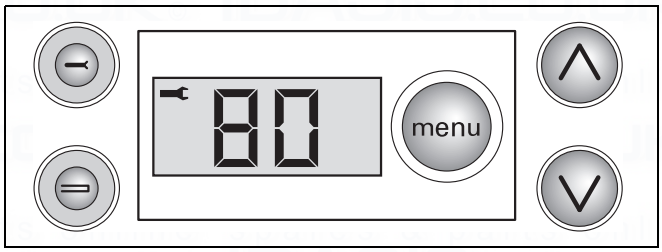

fig. 46 DBA with open-end spanner

Press the C button if you want to make sure that the boiler is actually operating at partial load ('Lo' appears in the display, fig. 47).

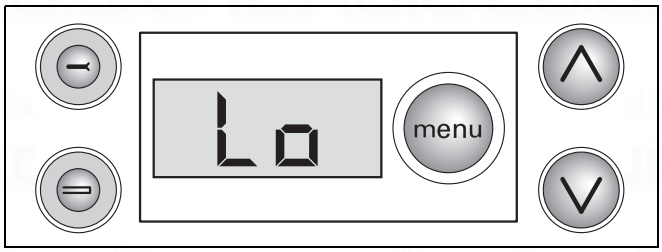

fig. 47 DBA display Lo

The boiler operates at full load when the Service button "A" is pressed again. An open-end spanner "F" appears in the top left hand corner of the display.

Press the C button if you want to make sure that the boiler is actually operating at full load ('Hi' appears in the display, fig. 48).

The boiler returns to regular operation when the Service button "A" is pressed once again or after the boiler has operated at partial- or full load for 30 minutes.

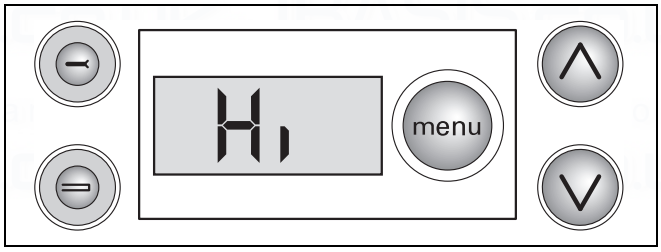

fig. 48 DBA display Hi

4. Display (see fig. 45)

The display visualizes settings, adjustments and fault codes (see fig. 49).

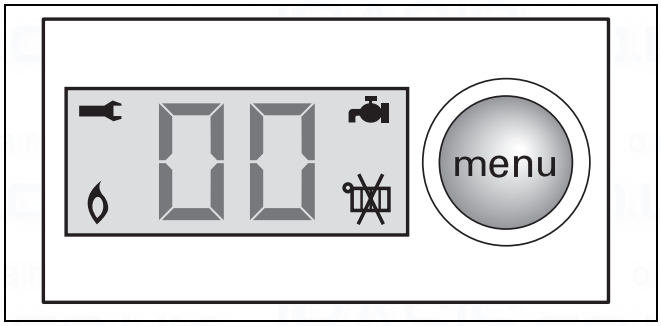

fig. 49 DBA display

5. Menu button "E" (see fig. 45)

The menu button "E" allows you to scroll through the menu items.

Pressing the E button once, the current DHW temperature (in combination with an external hot water cylinder) setting is displayed.

Pressing the E button again gives the current setting of summer operation.

Pressing the E button once more gives the current CH flow temperature setting.

6. and 7. Up "C" and Down "D" keys (see fig. 45)

These keys can be used for adjusting temperatures and activating or de-activating certain summer operation.

The C key when pressed gives the current operating status of the boiler.

Setting the domestic hot water (DHW) temperature (in combination with an external hot water cylinder)

- Press E button once then adjust the DHW temperature to the desired temperature (40 °C - 60 °C) using the C and D keys (see fig. 50, item 1). Factory setting is 48 °C.

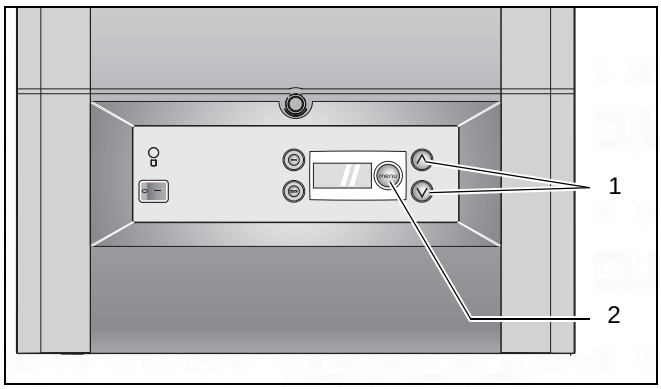

fig. 50 DBA – adjusting arrows

Setting the boiler to summer operation

When you want to make sure that your boiler will not operate for central heating in the summer then you can set the boiler to summer operation. The boiler will then only operate for DHW (in combination with an external hot water cylinder).

- Press the E button (see fig. 50, item 2) twice.
  The current setting blinks.
- Use the C or D keys to adjust to desired setting.

	Central heating is on.
	Central heating is off (summer operation). DHW is still available (when external hot water cylinder is used).

NOTE

When summer operation is active then the boiler will not operate for central heating until summer operation has been deactivated.

Setting the flow temperature

- Press E button (see fig. 50, item 2) three times then adjust the flow temperature to the desired temperature (30 °C – 80 °C) using the C and D keys (see fig. 45, item 1). Factory setting is 80 °C.

It is not possible to set the flow temperature when the boiler is set to summer operation.

Frost protection

The boiler has an automatic frost protection. When the CH flow temperature drops below 7 °C then the boiler will start up.

2.1.3 Checking for gas leaks

Use a suitable pressure gauge for the different pressure readings. It should be able to handle pressures up to 50 mbar with an accuracy of 0.01 mbar minimum.

- Disconnect the system from the power supply.
- Check all sections of gas pipework and connections for signs of leaks before starting up the system for the first time. If a leak is detected during tightness testing, use an approved leak detector to check all connections for possible escapes. The product must be certified as a gas leak-testing agent. DO NOT allow the product to come into contact with electrical wiring.

The test pressure of the gas pipe when the gas shut off valve is open may not exceed 150 mbar.

ATTENTION

Check the used measuring nipples for gas tightness.

2.1.4 Checking the gas type

It is very important that the gas type to which the boiler will be connected corresponds to the gas type the boiler is equipped with. If this is not the case, then the boiler must not be put into operation.

- Check the gas type with your gas supplier and compare this to the boiler's gas type as registered on the identfication tag (see table 3).

It is possible to change the boiler to another gas type (see table 2). This accessory can be ordered from your supplier.

Type of gas	Factory settings of gas burners
Natural gas **H**	When delivered ready for operation and set to Wobbe index 14.1 kWh/m^3 (referred to 15 °C, 1013 mbar), applicable for Wobbe index range 11.3 to 15.2 kWh/m^3. Inscription on gas-type indicating label: Category setting: G 20 - 2E_20 mbar
LPG **P**	After adaptation by a CORGI registered installer, the unit can be run on propane. Inscription on gas-type indicating label: 3P G 31_37 mbar

table 2 Gas-supply types

2.1.5 Measuring the gas-supply pressure (flow pressure)

There are two ways to measure the gas-supply pressure:

– measuring the standing gas-supply pressure (boiler not in operation);
– measuring the working gas-supply pressure (boiler operating at full power).

Type of gas	Gas injectors ∅ [mm]	Venturi tubes
Buderus 500	24/S	
Natural gas **H** (G20)	4.45	Standard
Propane **P** (LPG)	3.45	Standard

table 3 Gas injector diameter

NOTE

The difference between the standing and working pressure may never be greater than 5 mbar. If the difference between the two is greater than 5 mbar then the pressure loss in the gas pipe is too great.

Measuring the standing gas-supply pressure

- Take the boiler out of service by pressing the mains switch (fig. 51, item 1) to "**0**".
- Close the gas shut off valve (fig. 52, item 1).
- Set the pressure gauge to "**0**".
- Attach a tube from the pressure gauge to the gas test nipple (the lower one, see fig. 53, item 2).
- Slowly open the gas shut off valve (fig. 52, item 2).
- Measure the standing gas-supply pressure.

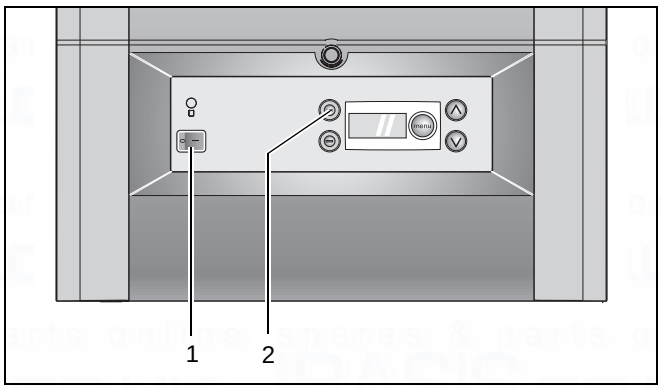

fig. 51 DBA front

Measuring the working pressure

- Take the boiler out of service by pressing the mains switch (fig. 51, item 1) to "**0**".
- Close the gas shut off valve (fig. 52, item 1).
- Set the pressure gauge to "**0**".
- Attach a tube from the pressure gauge to the gas test nipple (the lower one, see fig. 53, item 2).
- Slowly open the gas shut off valve (fig. 52, item 2).
- Open at least two radiators.
- Set the mains switch (fig. 51, item 1) to "**1**".
- Create a heat demand by pressing the service button "A" (fig. 51, item 2), until an open-end spanner "F" appears in the top left hand corner of the display.
- Measure the working gas-supply pressure.
- The working gas-supply pressure should be between:
  a minimum of 17 mbar and a maximum of 25 mbar (nominal connection pressure of 20 mbar) for Natural gas.
  a minimum of 30 mbar and a maximum 50 mbar (nominal connection pressure 37 mbar for Propane "**P**"
- Pull off the tube from the gas testing nipple.
- Tighten the screw of the gas testing nipple.

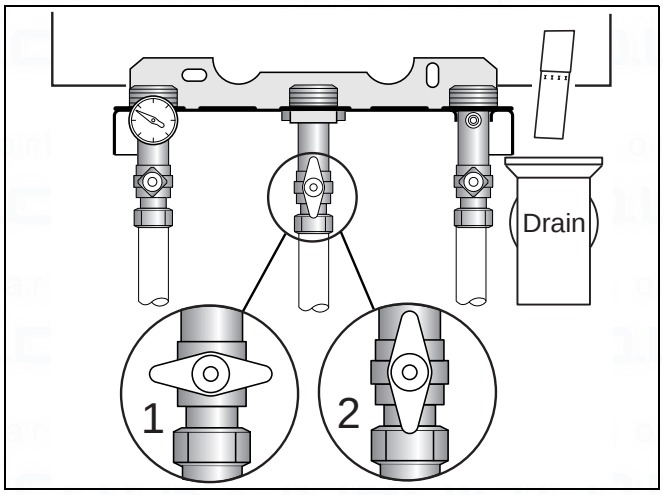

fig. 52 Gas valve

item 1: Gas valve closed
item 2: Gas valve open

ATTENTION

If the required connection pressure is incorrect contact your gas supplier.

Ensure that all disturbed joints and connections are checked for gas tightness on completion of tasks.

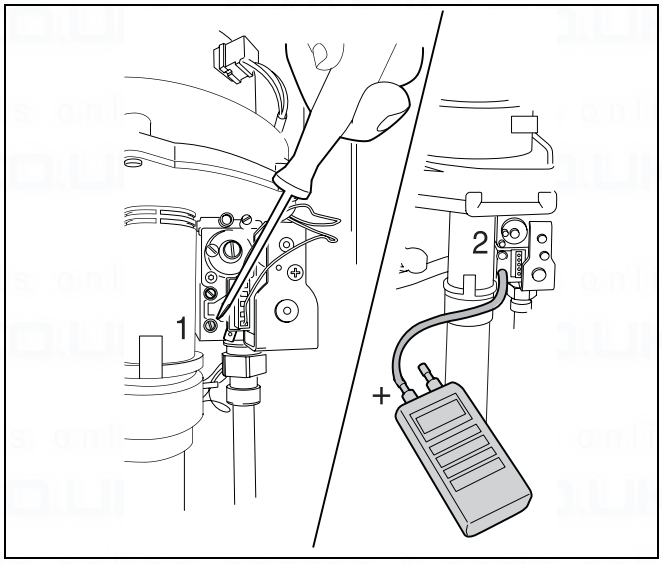

fig. 53 Measuring the gas-supply pressure

2.1.6 Checking the gas/air ratio and adjust as required

- Turn mains power switch to "**0**" (fig. 51, item 1).
- Remove the casing of the boiler.
- Shut the gas shut off valve underneath the boiler (see fig. 52, item 1).
- Open at least two radiators.
- Open the top measuring nipple (see fig. 54, item 1) with two turns.
- Set the pressure gauge to "**0**".
- Connect a tube from the "+" side of the pressure gauge to burner-pressure testing nipple (see fig. 54, item 2)
- Open the gas shut off valve (see fig. 52, item 2).
- Set the mains switch to "**1**" (fig. 51, item 1).

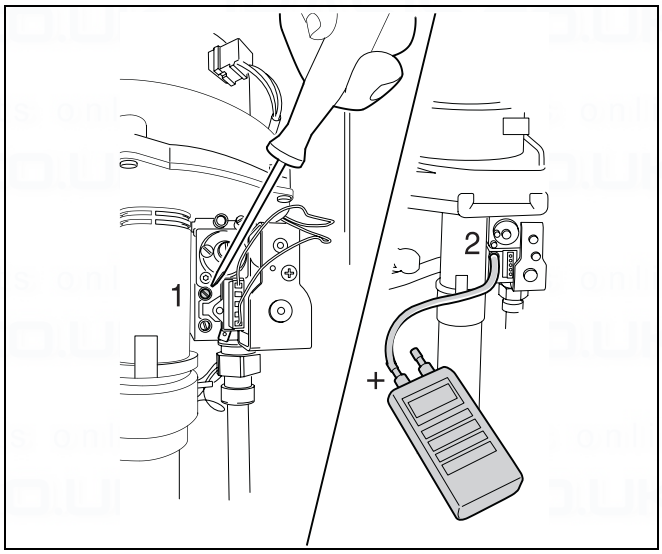

fig. 54 Check the gas/air ratio

- Set the boiler to partial load by pressing the service button "A" once. A symbol of an open-end spanner "F" appears in the upper left hand corner of the display (see fig. 55).

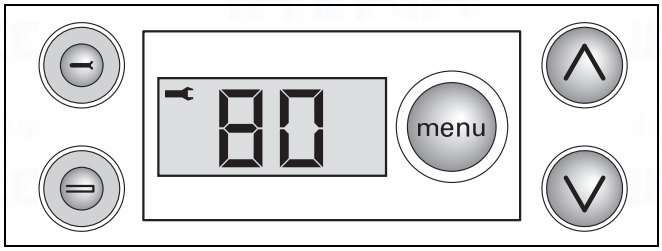

fig. 55 DBA with open-end spanner

- The optimum gas/air ratio is - 5 Pa (-0.05 mbar).
  The pressure difference should be between -10 and 0 Pa (see fig. 56).

If this is not the case then adjustment is needed:

- Remove the safety screw with a flat head screwdriver (fig. 57, item 1).
- Adjust the adjustment screw of the burner pressure to the correct gas/air ratio using a (4 mm) socket head wrench and by referring to fig. 56.

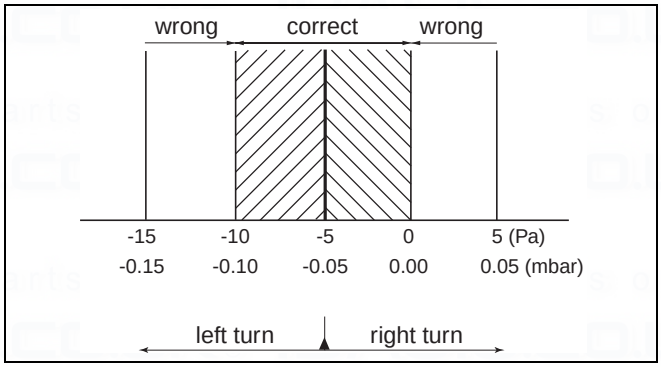

fig. 56 Pressure difference of gas/air ratio at partial load

- Replace the safety screw (fig. 57, item 1).
- Set mains power switch to "**0**" (see fig. 51, item 1).
- Shut the gas shut off valve (see fig. 52, item 1).
- Remove the tube from from the burner-pressure testing nipple (see fig. 54, item 1).
- Tighten the screw on the burner-pressure testing nipple.
- Open the gas shut off valve (see fig. 52, item 2).
- Turn the mains power switch to "**1**" (see fig. 51, item 1).

CAUTION

Check the test nipples for gas tightness.

NOTE

Technically it is not necessary to use a combustion analyzer for CO_2 measurements. The CO_2 level is secured by the gas/air ratio as described above.

A combustion analyzer, if available, can be used to confirm CO_2 levels (see technical specifications on page 7).

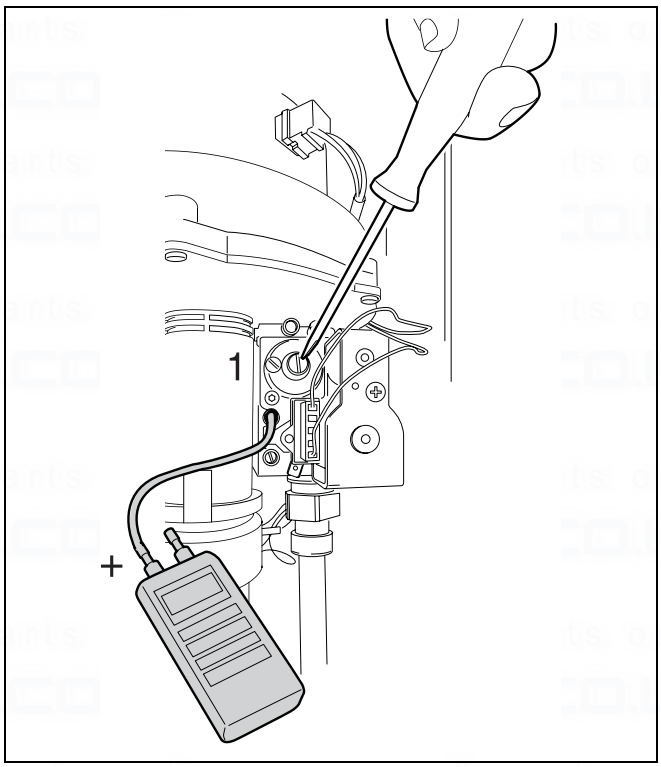

fig. 57 Adjust gas/air ratio

2.1.7 Gas rating test

- Isolate all other appliances.
- Press the service button "A" to set the boiler to full load.
- Ensure that there is no modulating of the fan gas valve.
- Carry out the Gas Rating procedure as described in "Essential Gas Safety' 3rd edition on pages 169-176.

2.1.8 Checking for leaks while boiler is in operation

- Use an approved leak detector to check all connections for possible leaks. The product must be certified as a gasleak-testing agent.
- Do not allow the product to come into contact with the electrical wiring.

2.1.9 Function testing

NOTE

During initial start-up and annual servicing, make sure that all control, regulating and safety devices are in full working order and, if applicable, check for correct adjustment.

Measuring the ionisation current (fig. 58)

- Turn the mains power switch to "**0**" (see fig. 51, item 1).
- Remove the casing.
- Loosen the connector-and-socket connection of the ionisation electrode and connect the multimeter in series.
- On the measuring device, select the µ-direct current range. The measuring device must have a resolution of at least 1 µA (1 micro ampere).
- Set mains power switch to "**1**" (see fig. 51, item 1).
- Set the boiler in to partial load by pressing the service button "A" once.
- Measure the ionisation current. The ionisation current being checked must measure >2 µA (>2 micro ampere) direct current.
- Enter the reading on the report form.
- Set the mains power switch to "**0**" (see fig. 51, item 1).
- Remove multimeter and restore the connector-and-socket connection to its original state.
- Refit the casing and secure the boiler with the radiator key (see fig. 59).
- Set the mains power switch to "**1**" (see fig. 51, item 1).

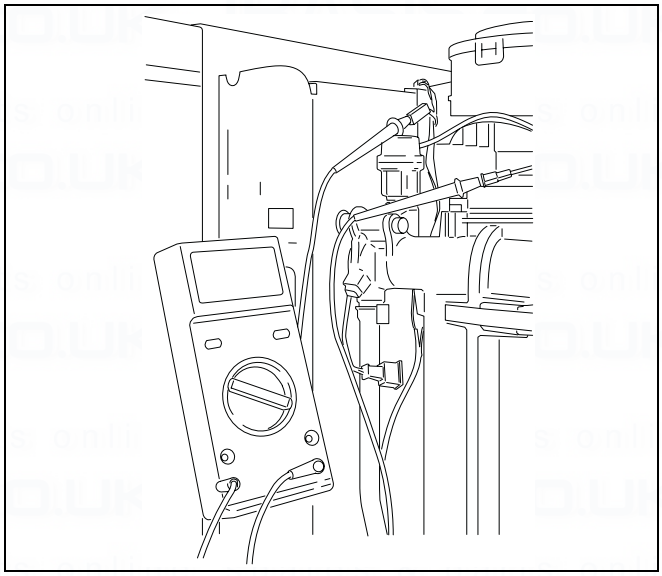

fig. 58 Measuring the ionisation current

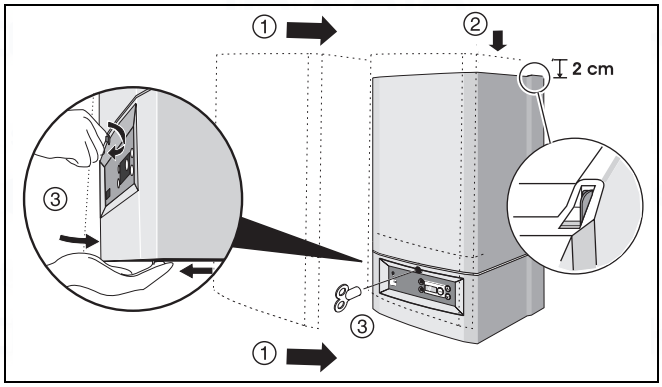

fig. 59 Refit casing

2.1.10 Handing over

After completing the installation and commissioning of the system the installer should hand over to the householder by the following actions:

- Hand over all relevant documentation to the end user and explain his/her responsibilities under the relevant national and regional regulations.
- Explain and demonstrate the lighting and shutting down procedures.

NOTE

Always keep the user manual and installation and servicing instructions available for feedback.

3 Inspection

3.1 General directions

- Do a visual and functional test of the installation.

3.2 Preparing the boiler for inspection

- Disconnect the boiler from the mains power supply.

DANGER OF FATAL INJURY
due to electric shock when system is opened.

- Before opening the system: disconnect the heating unit at the emergency OFF switch or the corresponding circuit breaker of the house power supply.
- Ensure that the heating system cannot be reconnected by accident.

- Remove the burner housing or cover from the heating boiler.

NOTE

If the gas supply pipes are to be disconnected from the burner, the housing MUST ONLY be removed by a qualified service technician and checked for tightness on reassembly.

3.2.1 Internal leak test

- Disconnect the boiler from the mains power supply.

Do not allow the product to come into contact with the electrical wiring.

3.2.2 Check the combustion chamber and heat exchanger for pollution

3.2.3 Check the burner

3.2.4 Check the functioning and safety of the flue gas exhaust

3.2.5 Check the pre-pressure of the expansion vessel

3.2.6 Check the hot water cylinder for leakage

3.2.7 Check the programming of the room thermostat

4 Maintenance

NOTE

The described cleaning of the burner and heat exchanger is only necessary when the boiler is heavily soiled. Otherwise it is sufficient to clean the burner and heat exchanger with a soft brush or compressed air without disassembling them.

4.1 Cleaning the heat exchanger and burner

- Switch the boiler off by setting the mains switch to "**0**" (see fig. 51, item 1).
- Close the gas shut off valve (see fig. 52, item 1).
- Unlock the securing screw with a radiator key and remove the casing.
- Loosen the gas connection between the gas supply and the gas air unit (fig. 60).

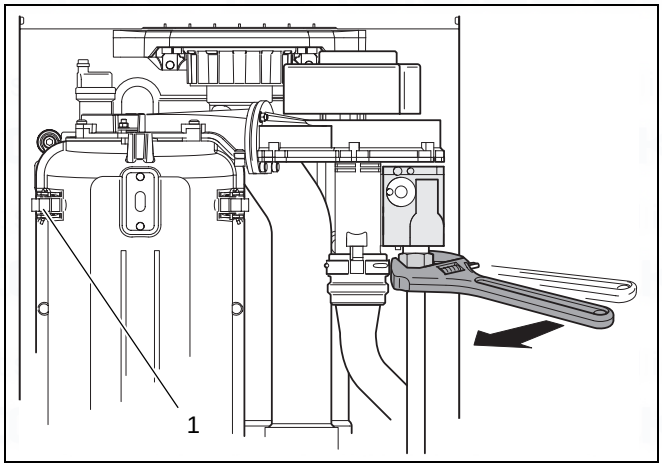

fig. 60 Loosen gas connection

- Remove the connectors (fig. 61, item 1, 2 and 3) from the gas air unit.
- Remove the air silencer from the gas air unit (fig. 61, item 4).
- Then remove the connectors of the ionisation electrode (fig. 61, item 6) and the glow ignitor (fig. 61, item 5).

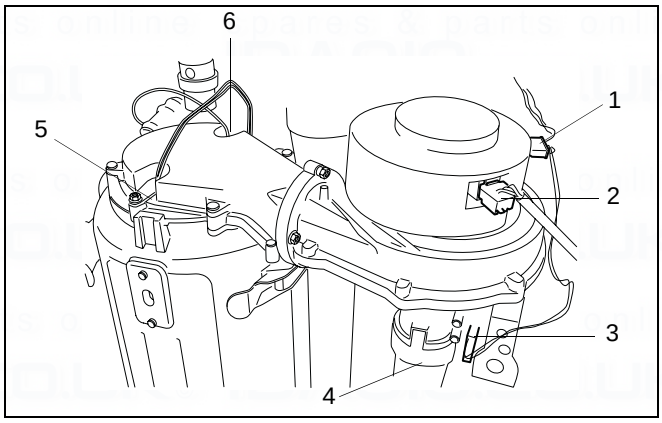

fig. 61 Remove connectors of the gas air unit

- By turning the unit a quarter turn (fig. 62, step 1), the unit can be removed by lifting it out of the boiler (fig. 62, step 2).
- Clean the burner when necessary. The burner may only be cleaned with a soft brush or compressed air.

CAUTION

Replace the burner seal after removing the burner from the gas air unit.

- Now the front cover of the heat exchanger can be removed by opening the latches (fig. 60, item 1).

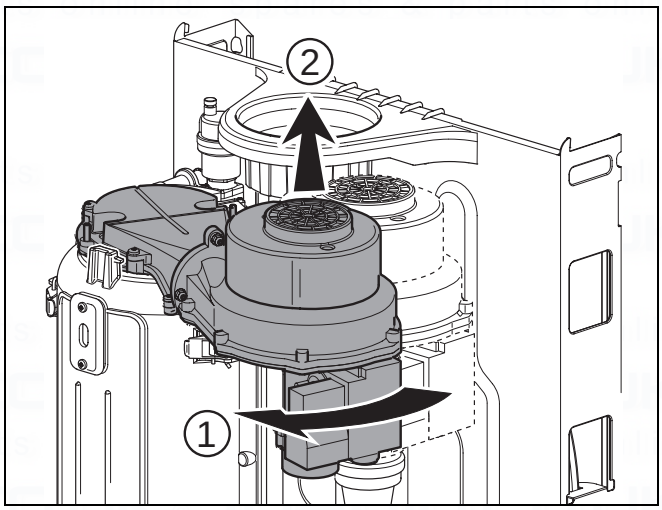

fig. 62 Remove gas air unit

- Remove the restrictor baffle from the heat exchanger (fig. 63, item 1).
- Inspect the heat exchanger. When needed clean the heat exchanger with a soft brush or compressed air.

NOTE

Only when a heat exchanger is heavily soiled is it recommended to drain the system, to remove the heat exchanger for cleaning.

- Check the seal for damage. Always replace the seal when in doubt.
- Reassemble in reverse order.

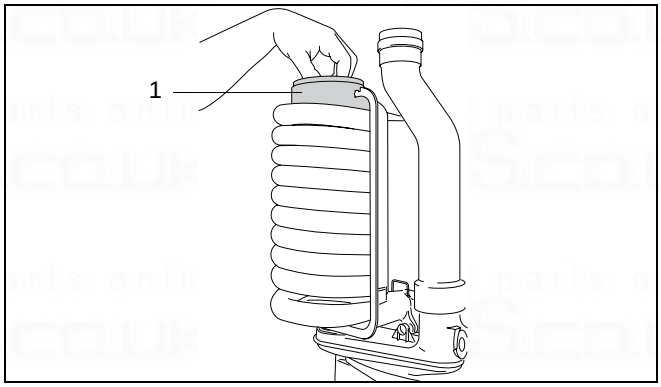

fig. 63 Remove restrictor baffle

4.2 Cleaning the condensate trap and syphon

- Remove the condensate trap (fig. 64 and fig. 65).

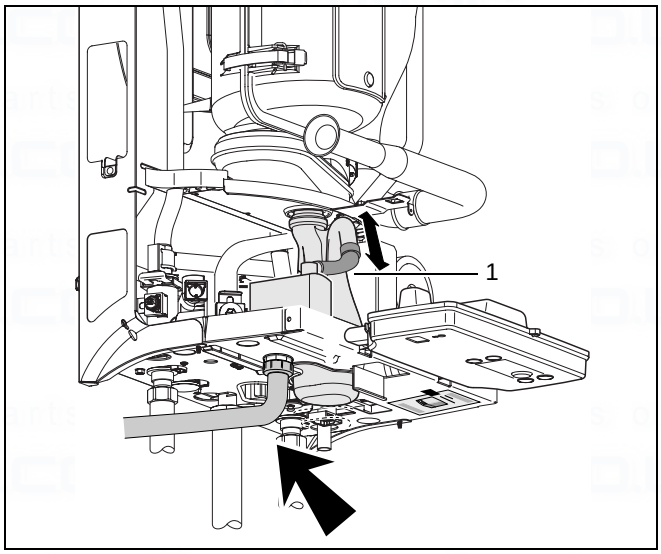

fig. 64 Disconnect hose from condensate trap

- Clean the condensate trap with tapwater and a brush.
- Fill the condensate trap with water and reassemble.
- Undo the condensate drain connection (see fig. 64, item 1) and remove the syphon.
- Rinse and refit the syphon.

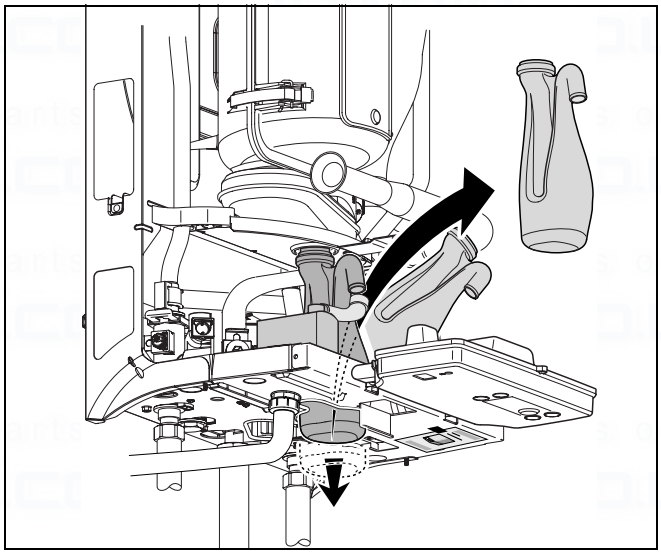

fig. 65 Remove the condensate trap

5 Appendix

5.1 Residual pump lift

This graphic shows the amount of pump lift remaining for the heating system.

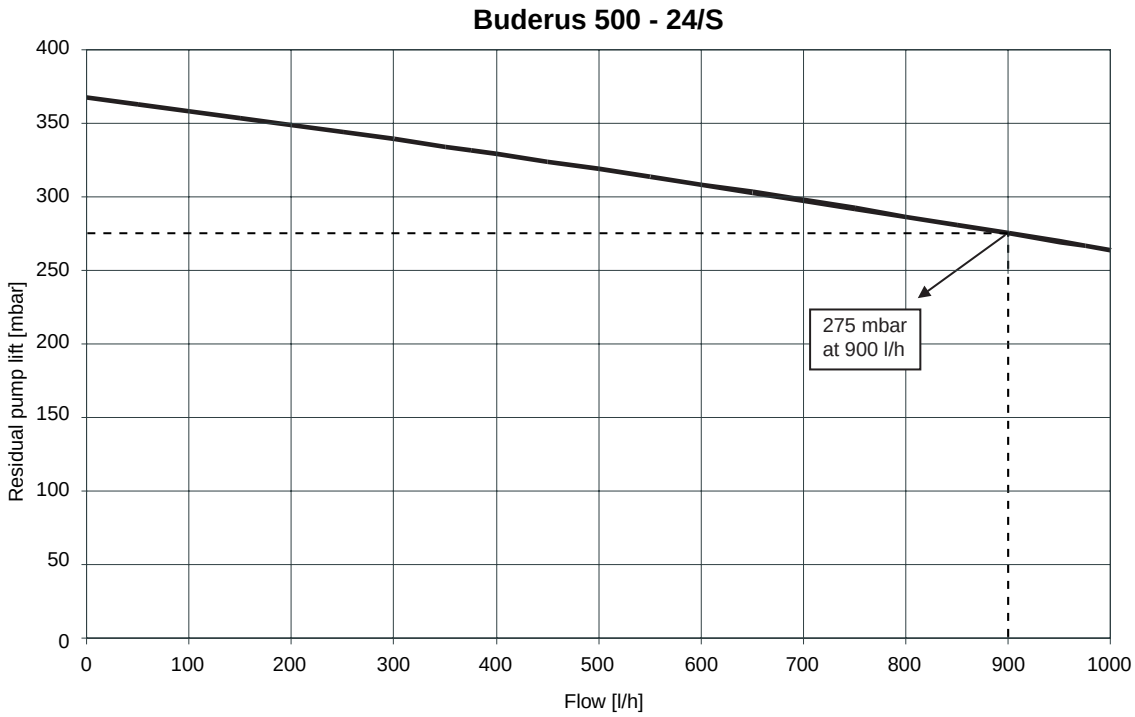

5.2 Spare parts list

The following are parts commonly required due to damage or expendability. Their failure or absence is likely to affect safety or performance of this appliance. For a pictorial representation of the part see the respective position number on the exploded view pictures on page 45.

	Description	Product No.
1	Casing	78155
2	Bracket	38092
3	Grommet cover	78145
4	Fan	73639
5	Fan seal (set of 5 pc.)	73640s
6	Gas injector 2E	73210
7	Gas valve	73645
8	Venturi	73641
9	50mm seal	73574
10	Air silencer tube	73646
11	Gas/air supply valve	73756s
12	Syphon	78173
13	Gas/air supply	73663
14	Burner seal (set of 2 pc.)	73669s
15	Burner	73668
16	Heat exchanger - Gas/air supply seal	73728

	Description	Product No.
17	Backside heat exchanger	73657
18	Gasket heat exchanger	73578
19	Heat exchanger	73659
20	Frontside heat exchanger	78125
21	Sight glass	73662
22	Combustion divider	73670
23	Glow ignitor	78105
24	Ionisation electrode	38320
25	Ionisation electrode seal (set of 2 pc.)	73666s
26	Glow ignitor seal (set of 2 pc.)	73665s
27	Bracket ionisation electrode and glow ignitor (2 pc.)	73667s
28	Shield glow ignitor	38453
29	Concentric adapter	78120
30	100mm Lipring	78121
31	60mm seal (bottom flue gas pipe)	73563

	Description	Product No.
32	Flue gas pipe	78122
33	60mm seal (top flue gas pipe)	73736
34	Flue gas pipe seal	73579
35	Flue gas thermostat (STL)	73376
36	Condensate collector	73630
37	Condensate trap	78123
38	Connection return	73583
39	Gas pipe	78126
40	Connection supply	73672
41	Automatic airvent	38618
42	Spring heat exchanger	73582s
43	O-ring heat exchanger (set of 10 pc.)	73580s
44	Heat exchanger seal (set of 2 pc.)	73584s
45	Safety sensor	78154
46	Supply pipe	78130
47	Pump Uper 15-50	78142
48	Connection return pipe	78133
49	Return pipe	78132
50	Connection return **system**	78168
51	–	
52	–	
53	Securing pin of the servomotor	73687
54	Discharge pipe of pressure relief valve	78134
55a	Pressure relief valve 3 bar	78198
55b	Key to Pressure relief valve 3 bar	78202
56	By-pass	78143
57	Expansion vessel pipe	78135
58	Expansion vessel	78163
59	–	
60	–	
61	–	
62	Connection supply **system**	78169
63	Flow sensor	78136
64	–	
65	–	
66	–	
67	Clips (set of 2x3 pc.)	78156s
69	CH connector	78161
70	–	
71	DBA 24/S and 28/C	78127
72	Power switch	73660
73	Cable harness	78129
74	Clips (set of 5 pc.)	73653s

	Description	Product No.
75	Clips (set of 5 pc.)	73056s
76	Condensate trap seal	73463
77	Drainpipe seal (set of 5 pc.)	73638s
78	O-ring (set of 10 pc.)	78151s
79	O-ring small (set of 10 pc.)	78152s
80	O-ring 73 x 5	78177
81	O-ring 48.9 x 2.62	78178
82	O-ring (set of 10 pc.)	78157s
83	–	
84	–	
85	RTH Converter	78079
86	O-ring (set of 10 pc.)	38472s
87	¾" Seal (set of 10 pc.)	15002s
88	O-ring (set of 10 pc.)	38478s
89	Cover seal	78174
90	Seal	73561
91	O-ring (set of 2x2 pc.)	73642s
92	Seal (set of 10 pc.)	73738s
93	1" Seal (set of 5 pc.)	73527s
94	Casing lock	73901
95	Cut off cock with pressure gauge	78150
96	–	
97	Gas valve	78201
98	–	
99	Valve CH return	75964
100	Spring (set of 5 pc.)	73490s
101	Spring Hydroframe (set of 5 pc.)	78164s
102	–	
103	1" Seal (set of 5 pc.)	73527s
104	–	
106	–	
–	Spring gaspipe (set of 5 pc.)	73531
–	LPG kit 24 kW-28kW	73734
–	O-ring sensor (set of 10 pc.)	38434s
–	O-ring 16x2 pressure relief valve (set of 10 pc.)	73729s
–	Fuse 2.5 AT (DBA) (set of 10 pc.)	73739s
–	O-ring (large) flow sensor (set of 10 pc.)	78153s
–	O-ring 9.19 x 2.62 sensor supply/return (set of 10 pc.)	78175s
–	Screw 4 x 20 Hydroframe (set of 5 pc.)	78179s
–	Screw M5 x 30 Pump (set of 5 pc.)	78180s
107	Receiver bracket	78200
108	Wall spacing frame	75972

Exploded view Single unit (Buderus 500-24/S)

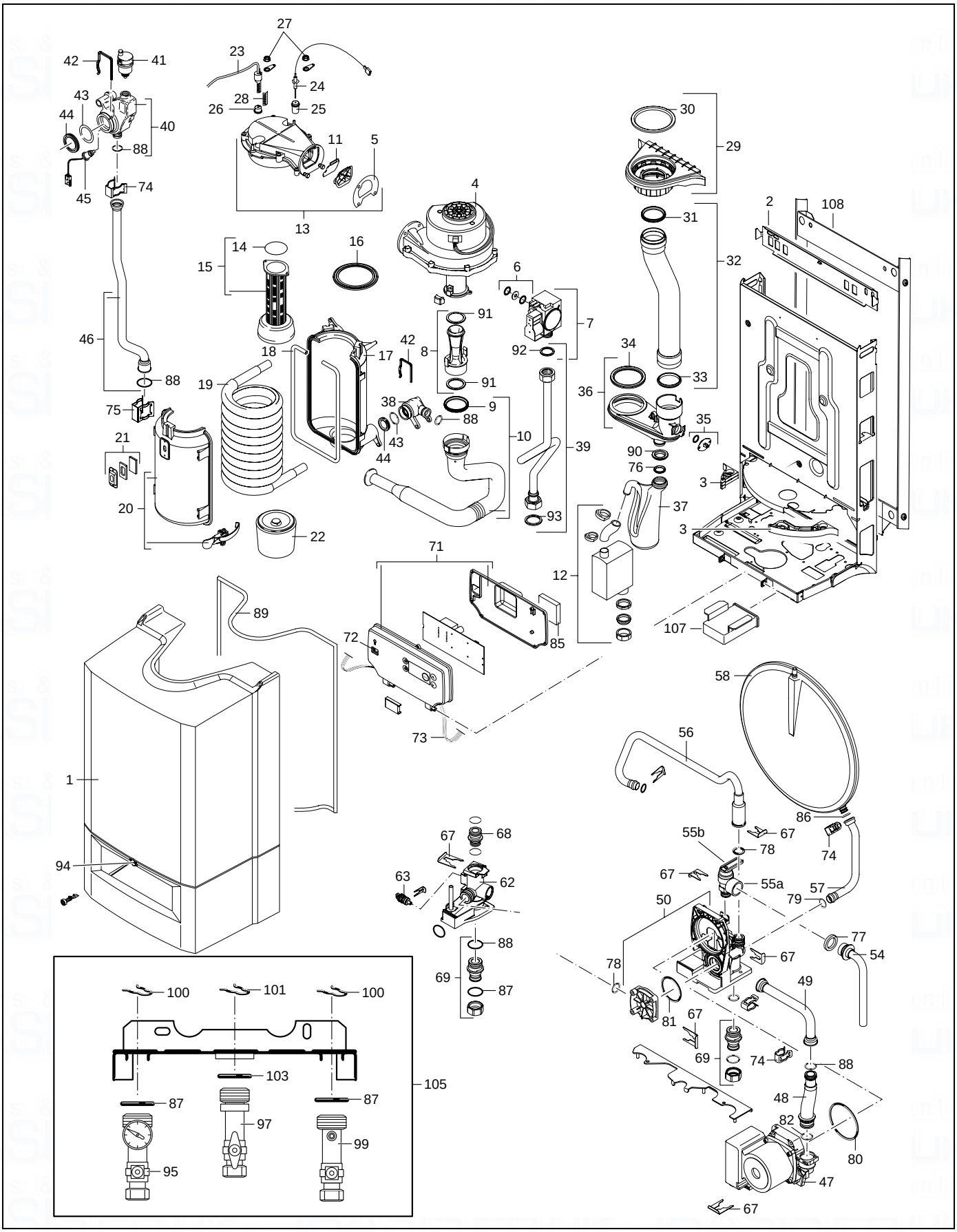

6 Index

A

Automatic air vent 31

B

Bracket for ModuLink 250 RF 10

E

Electrical connections
    Mains connection 21

H

Horizontal flue 16

I

Inspection 40

M

Maintenance 41
manifold assembly 11

P

Pipe connections
    Hot-water connection 12
Place of installation 10

T

Technical specifications 7
Type of gas supply 7, 35

V

Vertical flue 17

W

Wobbe index 35

Notes

spares & parts online IBASIS.CO.UK

Boulter
Buderus

Heating system specialist:

Boulter Buderus Ltd.
Magnet House
30 Whitehouse Road
Ipswich
Suffolk, IP1 5JA
Telephone: 0044 (0)1473 - 241555
Fax: 0044 (0)1473 - 241321

Sales Boilers: 0044 (0)1473 - 243780

Customer Services (gas): 0044 (0)870 - 421 5933

Technical Product Support (gas): 0044 (0)870 - 421 5944

http://www.boulter-buderus.co.uk
e-mail: sales@boulter-buderus.co.uk

721.530A - 2219A - 03/2005

spares & parts online IBASIS.CO.UK

Users manual

Wall-mounted condensing gas system boiler
Buderus 500 - 24/S

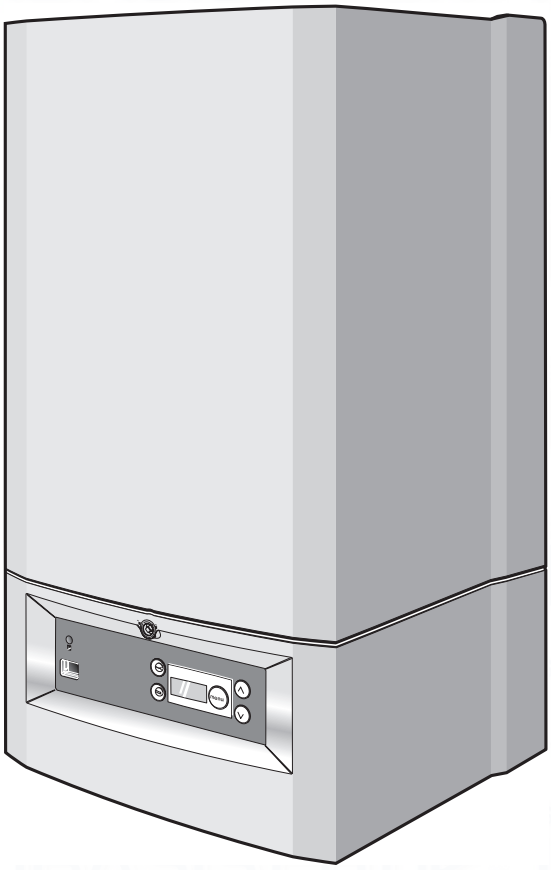

benchmark™

Boulter
Buderus

Please read thoroughly before operating the unit

spares & parts online IBASIS.CO.UK

Preface

Introduction

Please read these instructions and follow them carefully for a safe and economical use of your system boiler.

Important general instructions for use

This device should only be used for its intended purpose and in accordance with the regulations.

It is a requirement and in your own interest, and that of safety that this boiler must be installed by a CORGI registered installer, in accordance with the relevant requirements of the current Gas Safety (Installation and Use) Regulations, The Building Regulations, current I.E.E. Wiring Regulations and the relevant British Standard Codes of Practise.

The device may only be used in combination with the units, accessories and spare parts listed in the installation and maintenance instructions.

Other combinations of units, accessories and consumables are only to be used if they completely fulfil the specifications involved, and if system performance and safety are not affected in any way.

Subject to technical modifications

As a result of our policy of constant development, there may be small differences with respect to illustrations, functional steps and technical data.

Cleaning

For normal cleaning simply dust with a dry cloth. To remove stubborn marks and stains, wipe with a damp cloth and soap and finish off with a dry cloth.
DO NOT use abrasive cleaning materials.

G. C. Aplliance No. :

Buderus 500-24/S : 41-110-24

Contents

1 Safety precautions 4

2 Installation area / boiler room 4

3 Working in the heating system 4

4 Functions of the system and operating instructions 4

5 Maintenance 4

6 Conversion to LPG 4

7 Abbreviations 4

8 Permanent clearances 5

9 DBA 6

10 Initial start-up 7

10.1 Preparing for operation 7

10.2 Operational and fault codes 8

11 Taking the system out of service 9

11.1 Draining the system in case of frost 9

Preface

Dear Customer,

Your Buderus **500 Series** wall-mounted condensing gas system boiler has been designed and built in accordance with state-of-the-art technological standards and the recognised safety rules. Special focus has been placed on operator convenience in this respect.

Carefully read the safety instructions and operating manual to ensure safe, economic and ecologically beneficial use of the unit.

Due to the high efficiency of the boiler a plume of water vapour may form at the terminal during operation. This is normal.

1 Safety precautions

DANGER!
If you smell gas:

1. **No naked flames ! Do not smoke !**
2. **Avoid sparks ! Do not operate electrical switches. Do not use the telephone, plug-in devices of any kind or the doorbell!**
3. **Shut off the main gas supply!**
4. **Open windows and doors!**
5. **Warn building occupants and evacuate the building!**
6. **Call the gas distributor (under 'GAS' in the telephone directory) from outside the building!**

NOTE

In the event of any other type of incident, shut off the main gas supply and electric supply to the appliance and seek assistance from a CORGI registered engineer.

2 Installation area / boiler room

DANGER!

The air intake and outlet openings must not be reduced in size or closed.

DANGER!

Do not store or use inflammable materials or liquids near the heating boiler.

NOTE

To prevent the boiler from being damaged, care must be taken not to contaminate the combustion air with halogenated hydrocarbons (e. g. contained in aerosol sprays, solvents, detergents, paints, and adhesives), or with high quantities of dust. The room in which the boiler is installed must be frost-proof and be well ventilated.

3 Working in the heating system

DANGER!

Only a CORGI registered Engineer is to be entrusted with the installation of this boiler, the gas supply and the flue connection. Commissioning, Servicing and any Repairs must be carried out by a competent person i.e.:
a CORGI Registered Engineer.
All CORGI Registered Installers carry a CORGI identification card and have a registration number. Both should be recorded in your boiler logbook. You can check if your installer/Engineer is registered by telephoning 01256 372300 or by writing to:
CORGI, 1 Elmwood, Chineham Business Park, Crockford Lane, Basingstoke. RG24 8WG.

NOTE

It is mandatory to clean and service the system once a year ! This includes an inspection of the entire system to see if it is in full working order. Any faults and defects found in the course of inspection must be rectified immediately.

It is recommended to enter into a service contract with a specialist company.

4 Functions of the system and operating instructions

The installer should familiarize the user with the functions and operation of the heating system and ensure that a complete set of technical documentation is supplied.

5 Maintenance

The appliance should be serviced at least once a year by a CORGI registered installer.

6 Conversion to LPG

The boiler is suited for natural gas. To convert the boiler to LPG you must contact a CORGI registered fitter.

7 Abbreviations

DBA = Control unit (Dedicated Burner Automat)

CH flow = Central heating flow

CH return = Central heating return

MCW = Mains Cold Water.

8 Permanent clearances

The boiler must be located in an area with the following permanent clearances.

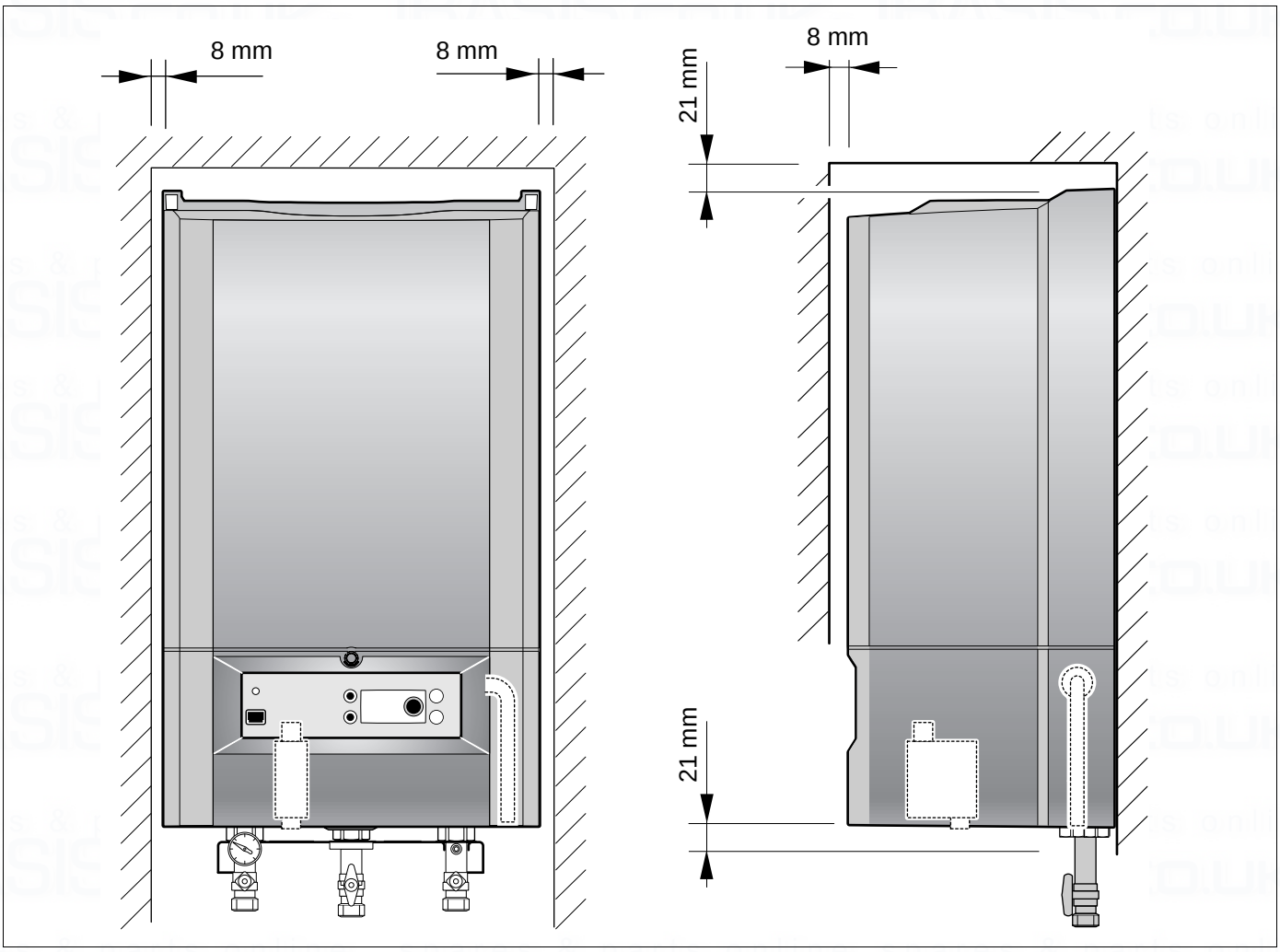

NOTE

The permanent clearances do not change if a wall spacing frame is used.

The installer or service engineer must be able to create sufficient service clearences. These clearences should have been considered at time of installation.

9 DBA

The boiler is equipped with a DBA. This is the internal control of the boiler. The DBA is located behind the access panel.

The DBA allows you to operate the boiler and to make adjustments in its settings.

DBA overview:

1. Mains switch (see fig. 1)

Use this switch to turn the boiler on or off.

2. Reset button "⇆" (see fig. 1)

When a blinking code is in the display, it is possible to try and restart the boiler by pressing this button.

NOTE

It is not possible to reset the boiler when there is no fault code blinking in the display.

3. Service Button "⊖" (see fig. 1)

Is used for servicing purposes only.

DO NOT use this button!

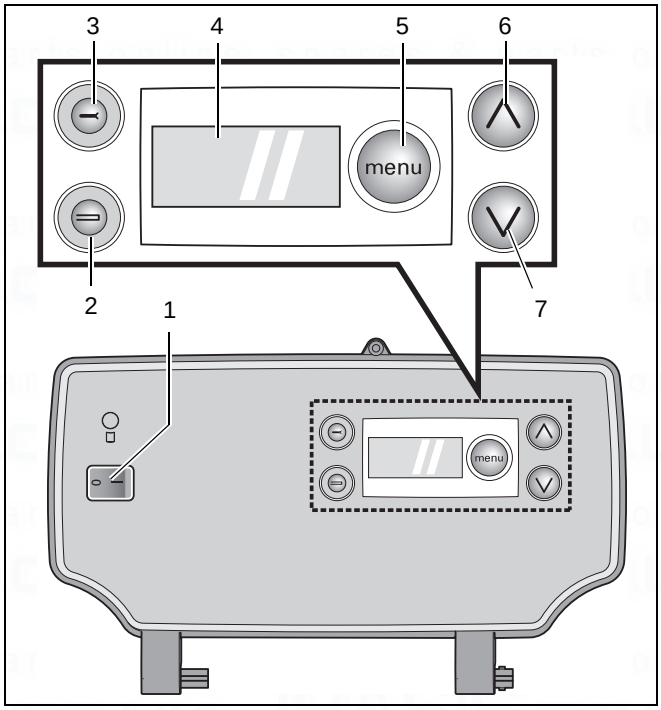

fig. 1 DBA

item 1: mains switch
item 2: "reset" button
item 3: "service" button
item 4: display
item 5: "menu" button
item 6: adjusting arrow up
item 7: adjusting arrow down

4. Display (see fig. 1)

The display visualizes settings, adjustments and fault codes (see fig. 2).

5. Menu button "menu" (see fig. 1)

The menu button "menu" allows you to scroll through the menu items.

Pressing the menu button once, the current DHW temperature (in combination with an external hot water cylinder) setting is displayed.

Pressing the menu button again gives the current setting of summer operation.

Pressing the menu button once more gives the current CH flow temperature setting.

6. and 7. Up "∧" and Down "∨" keys (see fig. 1)

These keys can be used for adjusting temperatures and activating or de-activating certain summer operation.

The ∧ key when pressed gives the current operating status of the boiler.

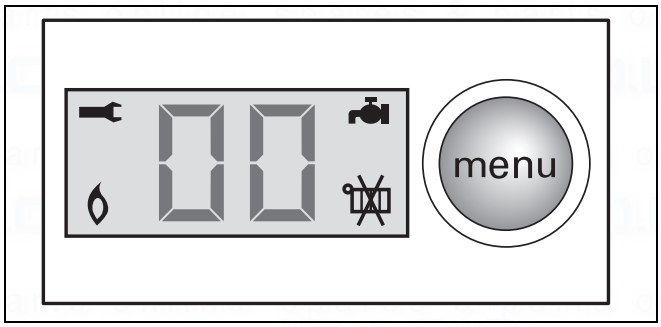

fig. 2 DBA display

10 Initial start-up

10.1 Preparing for operation

Please also note the user manual supplied with the external time controls and thermostat.

10.1.1 Check water pressure

- Check the pressure gauge (fig. 3, item 3) located at the bottom of the boiler for the current system pressure. Optimum system pressure is 1.5 bar.

10.1.2 Topping up the heating system

WARNING!

The wall-mounted condensing gas system boiler must not be activated at this stage.

The system should be filled with untreated mains water.

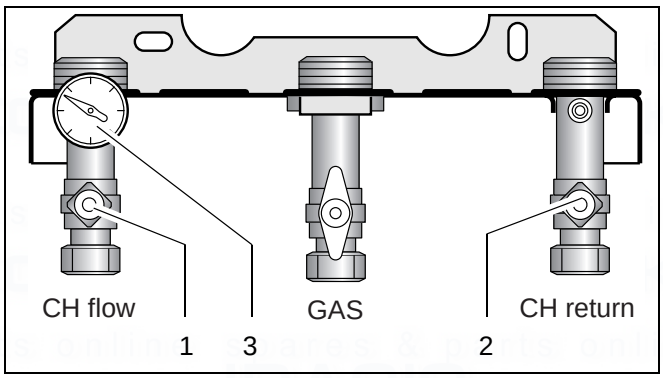

fig. 3 Servicing valves

- Turn off the boiler by setting the mains switch to "**0**".
- If necessary open the CH flow and CH return servicing valves (fig. 3, item 1 and 2).

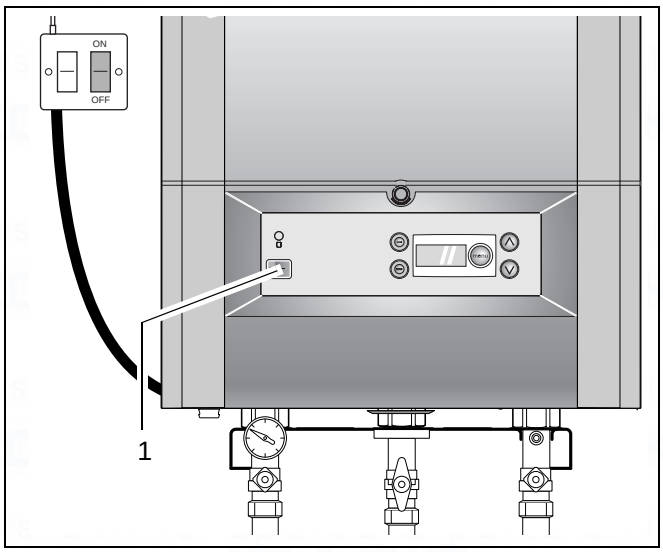

fig. 4 DBA – Mains switch

- Connect filling loop (accessory) (fig. 5).
- Open both stop valves (fig. 5).
- Fill the system to a pressure of approx. 1.5 bar (fig. 3, item 3).
- Shut both stop valves.
- Disconnect the filling loop.
- Vent all radiators from air starting with the lowest radiator and working your way up to the highest point.
- Check the pressure after venting. If the pressure has dropped under 1.0 bar then top up the system as described previously.
- Disconnect the filling loop and cap off.

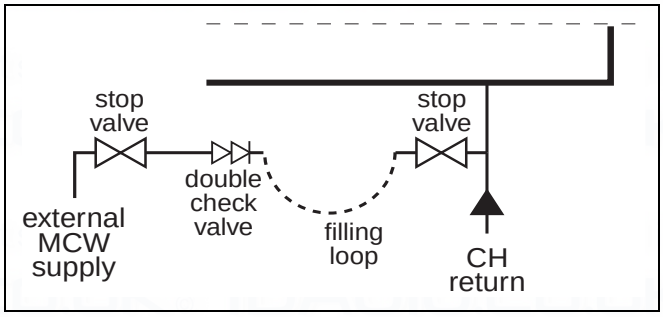

fig. 5 Filling loop

NOTE

If there are frequent water losses, have the system examined and repaired by a CORGI registered installer. Have the inhibitor concentration checked every year.

10.1.3 Temperature-setting adjustments

Setting the domestic hot water (DHW) temperature (in combination with an external hot water cylinder)

- Press (menu) button (see fig. 6, item 2) once then adjust the DHW temperature to the desired temperature (40 °C - 60 °C) using the (∧) and (∨) keys (see fig. 6, item 1). Factory setting is 48 °C.

Setting the boiler to summer operation

When you want to make sure that your boiler will not operate for central heating in the summer then you can set the boiler to summer operation. The boiler will then only operate for DHW (in combination with an external hot water cylinder).

- Press the (menu) button (see fig. 6, item 2) twice. The current setting blinks.
- Use the (∧) and (∨) keys to adjust to desired setting.

	Central heating is on.
	Central heating is off (summer operation). DHW is still available (in combination with an external hot water cylinder).

NOTE

When summer operation is active then the boiler will not operate for central heating until summer operation has been deactivated.

Setting the flow temperature for CH

- Press (menu) button (see fig. 6, item 2) three times then adjust the flow temperature to the desired temperature (30 °C – 80 °C) using the (∧) and (∨) keys (see fig. 6, item 1). Factory setting is 80 °C.

It is not possible to set the flow temperature when the boiler is set to summer operation.

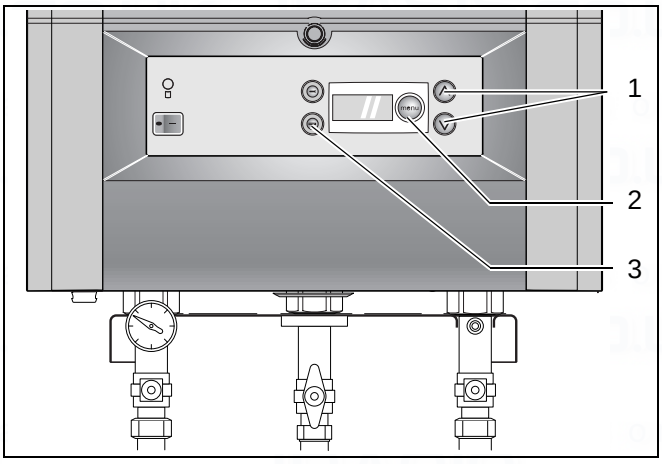

fig. 6 DBA – control panel

10.2 Operational and fault codes

Operating conditions and possible faults can be seen, pressing the (∧) key.

All codes not contained in table 1 should be noted down separately. These are malfunctions that require the presence of a CORGI installer.

Display after pressing service button	Meaning	Rectification
0A, 0C, 0E, 0H, 0L, 0U, 0Y	Boiler is ready for operation	
6A	Burner not ignited	Press Reset button (⇦) (fig. 6, item 3). If the burner fails to ignite after several unblocking operations, consult a CORGI installer.
-H	Normal heating mode	Maximum comfort when set at 60 °C
=H	Normal hot water mode	

Tab. 1 Operational and fault codes

11 Taking the system out of service

- Push the mains power switch (fig. 4, item 1) to “**0**”.
- Close the gas service valve by turning it clockwise (fig. 7, item 1).

Frost protection

The boiler has an automatic frost protection. When the CH flow temperature drops below 7 °C then the boiler will start up.

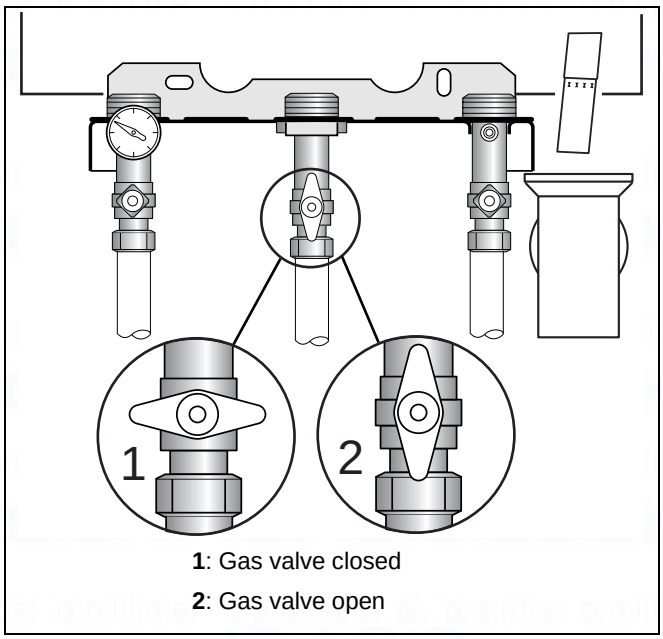

fig. 7 Gas service valve

11.1 Draining the system in case of frost

It is not recommended, but if the boiler needs to be shut down for a longer period of time, then it is necessary to drain the system. Especially when there is a chance for frost conditions.

- Turn off the boiler by setting the mains power to "0" (fig. 4, item 1).
- Close the gas valve (fig. 7, item 1).
- Drain the system at its lowest point using the stop valves or radiator (see fig. 8). The automatic air vent at the system’s highest point must be open.

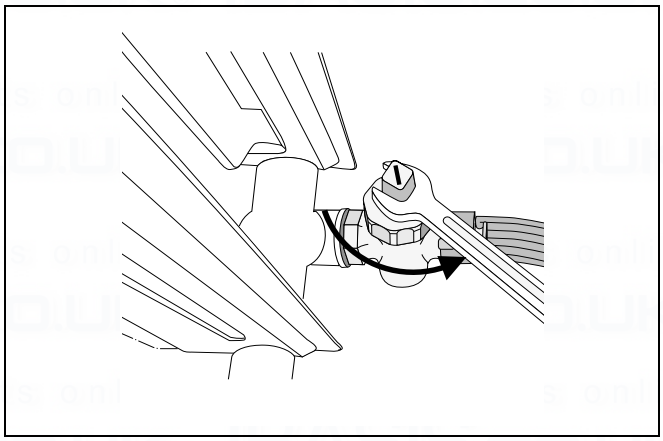

fig. 8 Draining the system

Note

spares & parts online IBASIS.CO.UK

spares & parts online IBASIS.CO.UK

Boulter Buderus

Heating system specialist:

Boulter Buderus Ltd.
Magnet House
30 Whitehouse Road
Ipswich
Suffolk, IP1 5JA
Telephone: 0044 (0)1473 - 241555
Fax: 0044 (0)1473 - 241321

Sales Boilers: 0044 (0)1473 - 243780

Customer Services (gas): 0044 (0)870 - 421 5933

Technical Product Support (gas): 0044 (0)870 - 421 5944

http://www.boulter-buderus.co.uk
e-mail: sales@boulter-buderus.co.uk

721.532A - 2219A - 02/2005

IBASIS.co.uk spares & parts online

Servicing manual

Gas condensing boiler
Buderus 500 - 24/S
Buderus 500 - 24/C
Buderus 500 - 28/C

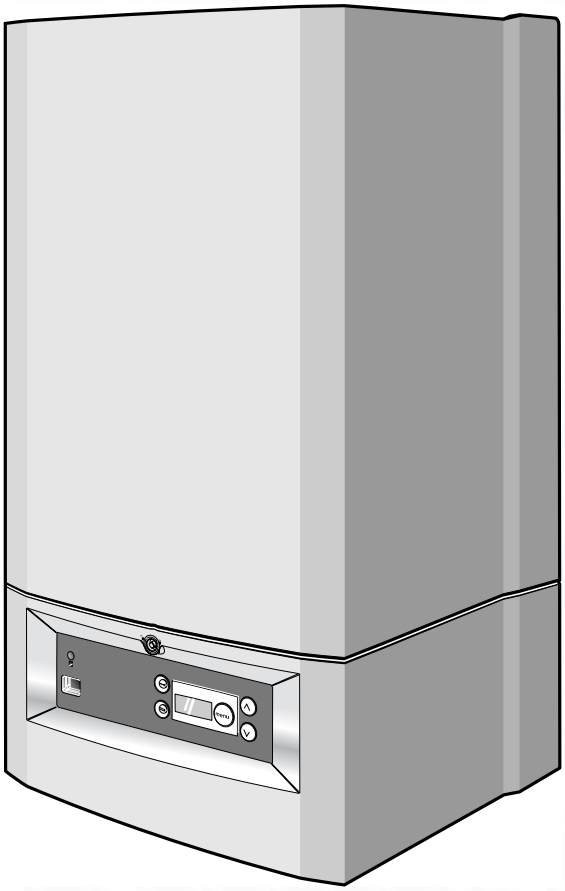

benchmark™

Boulter
Buderus

Please read thoroughly before attempting fault diagnosis

The boiler meets the basic requirements of the appropriate standards and directives.
Conformity has been substantiated by the proper documents which - together with the declaration of conformity - are filed with the manufacturer.

Subject to technical modifications!

Constant development efforts may result in minor deviations in illustrations, functional steps and technical data.

Updating the documentation

If you have suggestions for improvement or have found discrepancies, please do not hesitate to contact us.

box 1 List of contents

1 **General** 4

2 **Servicing manual user guide** 10

3 **Operation** 11

4 **Function** 14

5 **Symptoms** 17

6 **Diagnosis** 21

7 **Actions** 38

8 **Appendix** 76

9 **Index** 77

G. C. Aplliance No. :

Buderus 500-24/S 41-110-24

Buderus 500-24/C 41-110-04

Buderus 500-28/C 41-110-03

Other manuals available for this boiler are:

– user manual;
– installation and maintenance instructions;
– wall spacing frame instructions.

box 2 Preface

These service instructions apply to:
Boulter Buderus wall-mounted condensing gas boilers 500 - 24/S, 500 - 24/C and 500 - 28/C.

Model: $C_{13(x)}$, $C_{33(x)}$, $C_{53(x)}$, $C_{73(x)}$

Type: GB/IE II_{2H3P} 20 mbar, 37 mbar

Power rating: 230 VAC, 50 Hz, IP X4D

Fuse rating: 1.25 Ampere slow blow

The boiler unit consists of the following components:

– **500** Gas condensing boiler
– **28** Maximum output is 28 kW
– **C** Combination boiler (with integrated hot water supply)
– **S** System boiler.

Important general instructions for use

Only use the boiler in accordance with its designated use and the service instructions. Installation, maintenance and repair must be carried out by competent service engineers (e.g. CORGI registered). Only use the boiler in conjunction with the accessories and spare parts indicated in the installation, maintenance and service instructions. Other accessories and consumables may only be used if they are expressly provided for the designated use and if system performance and safety are not affected in any way.

The boiler is suitable for connection to fully pumped, sealed water systems ONLY. Adequate arrangements for completely draining the system by provision of draining valves must be provided in the installation pipework.

Pipework from the boiler is routed downwards as standard, but may be routed upwards behind the boiler using the wall spacing frame.

Subject to technical modifications.

As a result of our policy of constant development, there may be small differences between illustrations, functional steps and technical data.

BENCHMARK' Log Book

All Boulter Buderus gas fired boilers now include an installation, commissioning and service record log book.
The details of the log book will be required in the event of any warranty work being requested.
Please complete the appropriate sections on completion of the installation and commissioning.

REMEMBER: Please hand the log book back to the user.

box 3 Regulations and directives

It is a requirement that all gas appliances are installed and serviced by a CORGI registered installer in accordance with the regulations. Failure to service appliances correctly could lead to prosecution. It is in your own interest, and that of safety, to ensure the law is complied with.

It is a requirement and in your own interest, and that of safety that this boiler must be serviced by a CORGI registered installer, in accordance with the relevant requirements of the current Gas Safety (Installation and Use) Regulations, The Building Regulations, current I.E.E. Wiring Regulations and the relevant British Standard Codes of Practise.

Detailed recommendations are contained in the following British Standard Codes of Practice:

BS. 5440:1	Flues (for gas appliances of rated input not exceeding 70 kW).
BS. 5440:2	Ventilation (for gas appliances of rated input not exceeding 70 kW).
BS. 5449	Forced circulation hot water systems.
BS. 5546	Installation of gas hot water supplies for domestic purposes (2nd. family Gases).
BS. 6798	Installation of gas fired hot water boilers of rated input not exceeding 60 kW.
BS. 6891	Low pressure installation pipes.
BS. 7593: 1992:	Code of practice for treatment of water in domestic hot water central heating systems.
IGE/UP/1b	Tightness testing and purging domestic sized gas installations.

Health and & Safety Document No. 635.

The Electricity at Work Regulations, 1989.

The manufacturer's notes must not be taken, in any way, as overriding statutory obligations.

The design and construction of the Boulter Buderus wall-mounted condensing gas boiler conforms to the basic specifications listed in the European directive governing gas-fired appliances 90/396/EEC, and with respect to EN 625, EN 483 and EN 677.

NOTE:
Observe the corresponding technical rules and the building supervisory and statutory regulations when installing and operating the system.

WARNING!
Keep the burner-control unit housing CLOSED when working on water-bearing components.

NOTE:
It is mandatory to clean and service the system once a year. This includes an inspection of the entire system to see if it is in full working order. Defects and faults must be eliminated immediately.

NOTE:
When instructions aren't followed, warranty expires.

NOTE:
Condensing boilers work more efficient if the CH flow/return temperature is as low as possible.

Timber Framed Buildings

If the boiler is to be fitted in a timber framed building it should be fitted in accordance with the Institute of Gas Engineering document **IGE/UP/7:1998 and BS 5440:1.**

Bathroom Installations

This appliance is rated IP X4D.

The boiler may be installed in any room or internal space, although particular attention is drawn to the requirements of the current IEE (**BS.7671**) Wiring Regulations and, in Scotland, the electrical provisions of the building regulations applicable in Scotland, with respect to the installation of the boiler in a room or internal space containing a bath or shower.

If the appliance is to be installed or serviced in a room containing a bath or shower then, providing water jets are not going to be used for cleaning purposes (as in communal baths/showers), the appliance can be installed or serviced in Zone 3, as detailed in **BS.7671**.

Compartment Installations

A compartment used to enclose the boiler should be designed and constructed especially for this purpose.
An existing cupboard or compartment may be used, provided that it is modified for the purpose.

In both cases, details of essential features of cupboard/compartment design, including airing cupboard installation, are to conform to the following:
BS 6798 (No cupboard ventilation is required - see 'Air Supply' for details).

It is not necessary to have a purpose-provided air vent in the room or internal space in which the boiler is installed. Neither is it necessary to ventilate a cupboard or compartment in which the boiler is installed, due to the low surface temperatures of the boiler casing during operation; therefore the requirements of **BS 6798**, **Clause 12**, and **BS 5440:2** may be disregarded.

The permanent clearances required are:

in front:	8 mm
below:	21 mm
right side:	8 mm
left side:	8 mm
above:	21 mm

The position selected for installation MUST allow adequate space for servicing in front of the boiler. See table below:

in front:	350 mm
below:	180 mm
right side:	8 mm
left side:	8 mm
above:	200 mm

In addition, sufficient space may be required to allow lifting access to the wall mounting bracket.
Wall-mounted condensing gas combi boilers must only be operated with Boulter Buderus purpose made gas systems, which are certified for this type of boiler.

Observe the relevant standards, regulations and legislation of the country or region of final use.

CAUTION!
Use this boiler for its intended purpose only.

DANGER!
Notes relating to the heating system water.

Thoroughly flush the system before it is filled with water. Use only untreated water or water treatment product such as Sentinel X100 to fill and top up the system. For more information about Sentinel call 0151 420 9563.

When using water treatment, only products suitable for use with Boulter Buderus heat exchangers are permitted (e.g. Sentinel X100). Your warranty is at risk if an incorrect water treatment product is used in conjunction with this appliance.

For more information, contact Boulter Buderus Technical Product Support Department.

It is most important that the correct concentration of the water treatment product is maintained in accordance with the manufacturer's instructions.

If the boiler is used in an existing system any unsuitable additives MUST be removed by thorough cleaning. BS.7593:1992 details the steps necessary to clean a domestic central heating system.

In hard water areas, treatment to prevent lime scale may be necessary - however, the use of artificially softened water is NOT permitted.

Under no circumstances should the boiler be fired before the system has been thoroughly flushed.

Do not use artificially softened water.

Only plastic pipework containing a polymeric barrier should be used.

It is allowed to use copper for the first 600 mm.

NOTE:
Notes relating to domestic hot water

- The domestic hot water service must be in accordance with **BS 5546** and **BS 6700**.
- The boilers are suitable for connection to most types of washing machine and dishwasher appliances.
- When connecting to suitable showers, ensure that:
  a. The shower is capable of accepting mains pressures and temperatures up to 65 °C.
  b. The shower is ideally thermostatic or pressure balancing.
- Where temporary hardness exceeds 150 mg/litre, it is recommended that a proprietary scale reducing device is fitted into the boiler cold supply with the requirements of the local water company.

CAUTION!
Provision must be made to accommodate the expansion of DHW contained within the appliance, where a back flow prevention device is fitted
BS. 67989: §5.4.3.

Safe handling of substances

No asbestos, mercury or CFCs are included in any part of the boiler and its manufacture.

box 4 Hazard definitions and abbreviations

Hazard definitions

DANGER:
Indicates the presence of hazards that will cause severe personal injury, death or substantial property damage.

WARNING:
Indicates the presence of hazards that can cause severe personal injury, death or substantial property damage.

CAUTION:
Indicates presence of hazards that will or cause minor personal injury or property damage.

NOTICE:
Indicates special instructions on installation, operation or maintenance that are important but not related to personal injury or property damage.

Abbreviations

AV	=	Air Vent
BCT	=	Boulter Buderus cylinder thermostat
BDV	=	Boulter Buderus diverter valve
CB	=	Connection Block
CH	=	Central Heating
CHF	=	Central Heating Flow
CHR	=	Central Heating Return
CT	=	Cylinder Thermostat
CWDO	=	Condensate water drainage outlet
DHW	=	Domestic Hot Water
DV	=	Diverter Valve
E	=	Earth
L	=	Live
LSV	=	Lock Shield Valve
MCW	=	Mains Cold Water
N	=	Neutal
JB	=	Junction Box / RTH Relay
PL	=	Permanent Live
Prog	=	Programmer
PRV	=	Pressure relief valve (safety valve)
RT	=	Room Thermostat
RV	=	ModuLink 250 RF Receiver
T	=	Timer
TRV	=	Thermostatic Radiator Valve
WC	=	Wiring Centre
ZV	=	Two Port Zone Valve

box 5 Technical specifications

Buderus	Unit	500-24/S	500-24/C	500-28/C
Hot water capacity (combination boilers)	kW	5.7 – 28.5 (with external tank)	6.0 – 24.0	5.7 – 28.5
Rated thermal load for CH	kW	5.7 – 23.0	5.7 – 23.0	5.7 – 23.0
Rated thermal load for preparing DHW	kW	5.7 – 28.5	5.7 – 23.0	5.7 – 28.5
Rated heating capacity for system temperature (modulating from 30° to 100°) Heating curve 75/60 °C Heating curve 40/30 °C	 kW kW	 5.3 – 22.0 6.0 – 24.0	 5.3 – 22.0 6.0 – 24.0	 5.3 – 22.0 6.0 – 24.0
Seasonal efficiency (SEDBUK) for natural gas for propane	% %	90.3 92.3	90.3 92.3	90.3 92.3
Maximum gas consumption, hot water/tank	m^3/h	3.02	2.43	3.02
Maximum gas consumption, heating	m^3/h	2.43	2.43	2.43
Boiler efficiency (40/30°C) (lower value/upper value) (full load)	%	104 / 104	104 / 104	104 / 104
Boiler efficiency (40/30°C) (lower value) (partial load)	%	107	107	107
Boiler efficiency (40/30°C) (upper value) (partial load)	%	96.3	96.3	96.3
Boiler efficiency (75/60 °C) (lower value/upper value) (full load)	%	95.7 / 86.2	95.7 / 86.2	95.7 / 86.2
Boiler efficiency (75/60°C) (lower value/upper value) (partial load)	%	94.6 / 85.2	94.6 / 85.2	94.6 / 85.2
Chimney loss with burner shut down (standby heat loss) at nominal thermal load	%	1.2	1.2	1.2
Hot water circuit				
ΔT at residual head of 200 mbar	°C	<20	<20	<20
Maximum flow temperature	°C	80	80	80
Permitted system pressure	bar	1.0 – 3.0	1.0 – 3.0	1.0 – 3.0
Expansion vessel				
Capacity of expansion vessel	l	7.5	7.5	7.5
Admission pressure of expansion vessel	bar	1.0	1.0	1.0
Plate heat exchanger				
DHW flow rate at 35 °C rise	l/min	–	9.4	11.7
Supply pressure of hot water	bar	–	0.8 - 10.0	0.9 - 10.0
Adjustable DHW temperature	°C	–	40 - 60	40 - 60
Pipe connections				
Condensate outlet	Ø mm	21.5	21.5	21.5
CH flow/return (compression fitting)	Ø mm	22.0	22.0	22.0
MCW inlet / DHW outlet (compression fitting)	Ø mm	15.0	15.0	15.0
Gas on installation frame (compression fitting)	Ø mm	22.0	22.0	22.0
Pressure relief valve	Ø mm	15 mm (adapter supplied with boiler)		
Flue-gas connection				
Type of flue-gas connection (model)		$C_{13(x)}$, $C_{33(x)}$, $C_{53(x)}$, $C_{73(x)}$		
Ø Flue gas pipe / combustion-air inlet	mm	60/100 (accessory)		

box 5 Technical specifications

Buderus	Unit	500-24/S	500-24/C	500-28/C
Flue-gas readings				
Condensate water quantity, natural gas, 40/30 °C	l/h	1.6		
Exhaust-fume mass-flow rate Full load Part-load	 g/s g/s	 10.6 4.3		
Exhaust-fume temperature, full load Heating curve 75/60 °C Heating curve 40/30 °C	 °C °C	 77 55		
Exhaust-fume temperature, partial load Heating curve 75/60 °C Heating curve 40/30 °C	 °C °C	 60 35		
CO_2 full load, natural gas standard test gas G20	%	9,2		
CO_2 full load, natural gas standard test gas G31 propane	%	10.3		
Standard emission factor NO_X	ppm (mg/kWh)	<30		
Standard emission factor CO	ppm (mg/kWh)	<22		
Flow pressure available for use	Pa	75		
Electrical specifications				
Mains connection voltage	Vac	230 (50 Hz)		
Electrical protection rating		IP X4D		
Electrical power consumption, standby	W	4		
Electrical power consumption, partial load	W	88		
Electrical power consumption, full load	W	110		
Dimensions and weight of boiler				
height × width × depth	mm	780 × 460 × 330	780 × 460 × 330	780 × 460 × 330
Weight without casing Weight with casing	kg kg	30 33	31 34	31 34
Gas				
Category of gas as per EN 437 for GB		II_{2H3P} 20 mbar, 37 mbar (natural gas **H** and propane **P**)		
Gas injector Ø natural gas **H** (G20)	mm	4.45	4.45	4.45
Gas injector Ø propane **P** (G31)	mm	3.45	3.45	3.45
Venturi article number		423.072A	423.072A	423.072A
Natural gas **H**		Delivered ready for operation, adjusted to Wobbe index 14.1 kWh/m^3 (with reference to 15 °C, 1013 mbar), applicable to Wobbe index range 11.3 to 15.2 kWh/m^3. Markings on gas classification plate: Configured category: G 20 - 2E - 20 mbar		
Propane **P**		Deemed suitable for use with propane after inspection by a registered Corgi heating engineer. Markings on gas classification plate: Configured category: 3P G 31_30-50 mbar.		
Other items				
Pump		UP 15-50		
Pump over-run time: Heating system default adjustments External cylinder Plate heat exchanger (ECO) Plate heat exchanger (warm start) After service mode		 5 minutes 30 - 40 seconds – – 1 minute	 5 minutes – 30 - 40 seconds 30 seconds 1 minute	 5 minutes – 30 - 40 seconds 30 seconds 1 minute

box 6 Overview Buderus 500

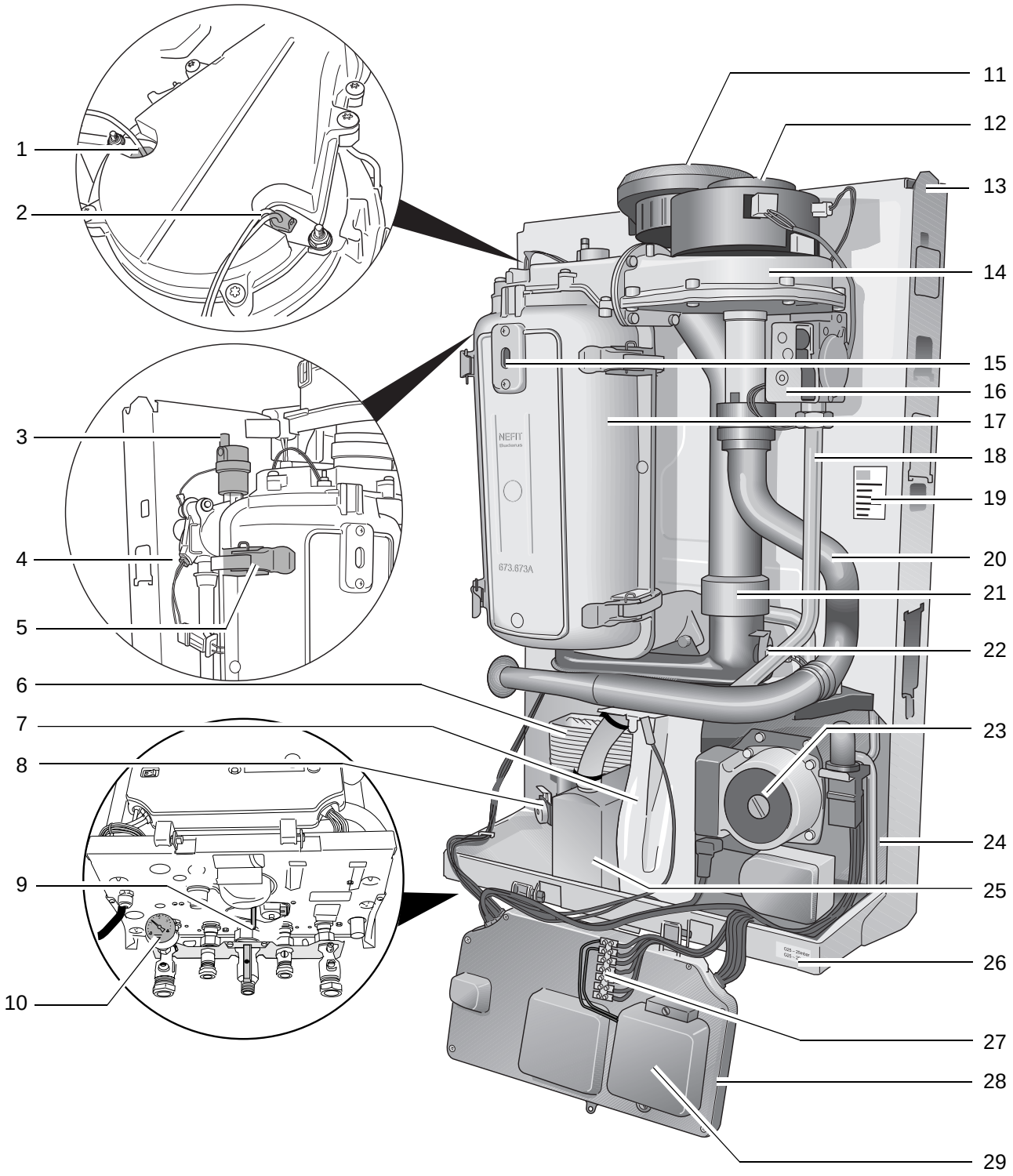

box 7	Key to terms
Item 1:	*Ionisation electrode*
Item 2:	*Glow ignitor*
Item 3:	*Automatic air vent*
Item 4:	*Safety sensor*
Item 5:	*Clamp for heat exchanger cover*
Item 6:	*Plate heat exchanger*
Item 7:	*Condensate trap*
Item 8:	*Flow NTC sensor*
Item 9:	*DHW flow regulator*
Item 10:	*Pressure gauge*
Item 11:	*Concentric flue gas adaptor*
Item 12	*Fan*
Item 13:	*Frame*
Item 14:	*Gas/Air unit*
Item 15:	*Sight glass*
Item 16:	*Gas valve*
Item 17:	*Heat exchanger*
Item 18:	*Gas supply pipe*
Item 19:	*Identification plate of boiler*
Item 20:	*Air silencer tube*
Item 21:	*Flue gas pipe*
Item 22:	*Flue gas safety temperature limiter (STL)*
Item 23:	*Pump 15-50*
Item 24:	*Pressure relief valve discharge pipe*
Item 25:	*Syphon*
Item 26:	*Identification plate showing gas category*
Item 27:	*Connection block*
Item 28:	*DBA control panel*
Item 29:	*RTH converter / junction box*

box 8 General points

WARNING!
DANGER OF FATAL ACCIDENT FROM EXPLOSIVE FUMES

If you smell gas

- There is a danger of explosion.
- No naked lights. No smoking. DO NOT use a naked light to detect possible leaks.
- DO NOT operate any device that is likely to produce sparks.
- DO NOT operate electrical switches of any kind (including telephones, plug-in devices and doorbells)
- Shut off the gas supply at the main valve.
- Open doors and windows.
- Warn other occupants of the building (but DO NOT use the house intercom or doorbells).
- Contact the gas supplier from a telephone located outside the building.
- If you detect an audible gas leak, evacuate the building immediately, prevent other persons from entering, and notify the police and fire service immediately (from a telephone OUTSIDE the building).

WARNING!
DANGER OF FATAL ACCIDENT
due to electric shock

CAUTION!
General information on maintenance work.

USER INSTRUCTIONS
Instructions for optimum usage, correct adjustment of the boiler and other useful information.

CAUTION!
Use eye protection, inhalation protection, hearing, gloves, shoes etc. on the right time.

box 9

This document consists of various **sections**. These in turn contain **subsections/boxes** in the form of text or tables.

Subsections/boxes inside text and tables are identified by a small grey box. Each subsection/box is assigned its own identification number.

These subsections/boxes are divided into **operating** steps. If an operating step involves the taking of a yes/no decision, the right-hand side of the table indicates which **subsection / operating step** you should proceed (cross reference).

Section

Cross reference to subsection or operating step

Subsection/box

6 Diagnosis

box 24

step 28	Check the actuation of the servomotor of the **internal** three-way valve, see box 186.		
step 29	Does the servomotor of the **internal** three-way valve start up correctly?	Yes:	→ step **30**
		No:	→ step **31**
step 30	Replace the servomotor of the **internal** three-way valve, see box 191.		→ box **43**
step 31	Check the power supply cable of the **internal** three-way valve, see box 192.		
step 32	Is the power supply cable of the **internal** three-way valve in good condition?	Yes:	→ box **42**
		No:	→ step **33**
step 33	Replace the cable loom (or the affected part thereof).		→ box **43**
step 34	Check the movement of the servomotor of the Boulter Buderus 24V AC external three-way valve, see box 212.		
step 35	Does the servomotor of the Boulter Buderus 24V AC external three-way valve operate correctly?	Yes:	→ step **36**
		No:	→ step **39**
step 36	Check to ensure that the the Boulter Buderus 24V AC external three-way valve has been fitted correctly, see box 228.		
step 37	Has the Boulter Buderus 24V AC external three-way valve been fitted correctly?	Yes:	→ step **45**
		No:	→ step **38**
step 38	Install the Boulter Buderus 24V AC external three-way valve correctly, see box 228.		→ box **43**
step 39	Check to ensure that the Boulter Buderus 24V AC external three-way valve is actuated correctly, see box 213 and box 229.		
step 40	Does the Boulter Buderus 24V AC external three-way valve actuate correctly?	Yes:	→ step **41**
		No:	→ step **42**
step 41	Replace the servomotor of the Boulter Buderus 24V AC external three-way valve, see box 218.		→ box **43**
step 42	Check the wiring of the Boulter Buderus 24V AC external three-way valve, see box 221.		
step 43	Is the wiring of the Boulter Buderus 24V AC external three-way valve in correct condition?	Yes:	→ step **47**
		No:	→ step **44**
step 44	Replace the wiring of the Boulter Buderus 24V AC external three-way valve.		→ box **43**
step 45	Check the drive mechanism of the Boulter Buderus 24V AC external three-way valve, see box 222.		
step 46	Is the drive mechanism of the Boulter Buderus 24V AC external three-way valve working correctly?	Yes:	→ box **42**
		No:	→ step **47**
step 47	Replace the internal components of the Boulter Buderus 24V AC external three-way valve, see box 225.		→ box **43**
step 48	Check the wiring of the Boulter Buderus 24V AC external three-way valve between the connection box or moving plug-and-socket connection and the control panel as per box 288.		

box 25

On combi boiler supply: hot water available, but no heating operation.
On system boiler supply: no heating operation.
Hot water may be available, but no heating operation.

step 1	Check to ensure that the power supply cable to the RTH converter/Junction box has been installed correctly, see box 286.		
step 2	Is the 230V connection to the RTH converter/Junction box fitted correctly?	Yes:	→ step **4**
		No:	→ step **3**
step 3	Correctly attach the switch live to terminal 1 and Neutral to terminal 2 on the 230V connector, see box 286.		
step 4	Disconnect black leads from terminals 1 & 2 on the back of the DBA and test for continuity between the two leads. **No continuity** check S/L and N connections are made correctly and that there is 230v between the two. Replace RTH converter/Junction box. **Continuity** reconnect the cables to terminals 1 & 2 and check the connections between the terminals and the DBA.		→ box **43**

We reserve the right to make technical modifications — Boulter Buderus Ltd • http://www.boulter-buderus.co.uk

24 — Servicing manual Gas condensing boiler Buderus 500-24/S, 500-24/C and 500-28/C • Issued 02/2005

Operating step number

Explanation of this subject starts in this box.
The following boxes can be relevant as well.

box 10 Operation

General points

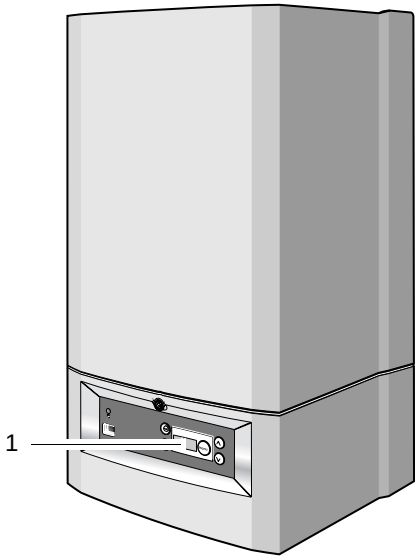

The central boiler can be run from the DBA control panel (item 1).

box 11

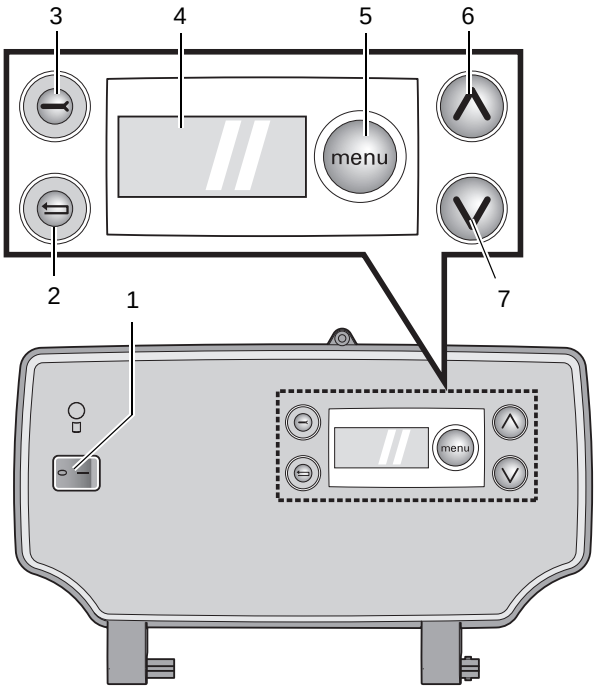

item 1: *Mains switch 0/1*
item 2: *Reset button*
item 3: *Service button*
item 4: *Display*
item 5: *Menu button*
item 6: *Adjusting arrow UP*
item 7: *Adjusting arrow DOWN*

You can navigate through the menu structure of the central boiler using the service button, reset button, ⋀-button and ⋁-button (item 2, 3, 5, 6 and 7) and the display (item 4), box 12 to 14.

box 12	Normal Operation menu	
step 1	24 Current CH flow temperature, in °C. See also box 20.	
step 2	Keep the (V)-button pressed.	
step 3	00 current DHW flow rate, in litres per minute	
step 4	Continue with Normal Operation menu ?	Yes: → step **6** No: → step **5**
step 5	Release the (V)-button.	→ step **1**
step 6	Keep the (Λ)-button pressed.	
step 7	OH Operating code. See also box 20 In this case: The boiler is ready for operation. No current heat requirement.	→ step **4**

box 13	Service Mode menu (no hot water is available during service-mode operation)	
step 1	24 Current CH flow temperature, in °C. See also box 20.	
step 2	Activate service mode?	Yes: → step **3** No: → step **1**
step 3	Press the (−)-button once.	
step 4	24 As soon as the spanner symbol on the left-hand side of the display and the flame appear, the boiler will run for 30 minutes in service mode. The maximum CH flow temperature (as configured in the “Settings” menu) applies in this case.	
step 5	Briefly press the (Λ)-button.	
step 6	Partial-load service mode Lo is activated. Check the gas/air ratio and ionisation current. Adjust the gas/air ratio as required. See box 233 and box 143.	
step 7	Exit partial-load service mode?	Yes: → step **8** No: → step **6**
step 8	Press the (−)-button once.	
step 9	Briefly press the (Λ)-button.	
step10	Full-load service mode Hi is activated. Check the working gas input pressure, or analyse the exhaust gas accordingly box 230.	
step11	Exit full-load service mode?	Yes: → step **12** No: → step **10**
step12	Press the (−)-button once, or wait for service mode to expire (after 30 minutes).	
step13	Service mode is deactivated.	→ step **1**

box 14	Settings menu	
step 1	24 Current CH flow temperature, in °C. See also box 17.	
step 2	Open “Settings” menu?	Yes: → step **3** No: → step **1**
step 3	Press the (menu)-button once.	→ step **4**
step 4	Is boiler a combination boiler with warm start ?	Yes: → step **5** No: → step **9**
step 5	Pr (/) Configured hot water mode. As soon as Pr is displayed, you can verify the current hot water mode, or adjust it as required. See also box 18.	
step 6	Adjust configured hot water mode ?	Yes: → step **7** No: → step **8**

box 14 Settings menu

step 7	Use single or multiple operation of the (∨)- and (∧)-buttons to activate and disable hot water mode. Pr ( ): Hot water mode to ECO, Pr ( ): Hot water mode to warm start.	
step 8	Press the (menu)-button once.	
step 9	60 As soon as the DHW temperature (in °C) appears on the display 60, you can read the current DHW temperature, or adjust it as required. See also box 18.	
step 10	Adjust DHW temperature ?	Yes: → step **11** No: → step **12**
step 11	**Lower**: lower the DHW temperature with the (∨)-button. **Higher**: increase the DHW temperature with the (∧)-button.	
step 12	Press the (menu)-button once.	
step 13	Pr (/) Configured heating mode. As soon as Pr is displayed, you can verify the current heating mode, or adjust it as required. See also box 18.	
step 14	Adjust configured heating mode ?	Yes: → step **15** No: → step **16**
step 15	Use single or multiple operation of the (∨)- and (∧)-buttons to activate and disable heating mode. Pr ( ): Heating mode on, Pr ( ): Heating mode off.	
step 16	Press the (menu)-button once.	
step 17	80 Configure CH flow temperature, in °C. See also box 18. As soon as 80 is displayed, you can verify the current CH flow temperature, or adjust it as required.	
step 18	Adjust CH flow temperature ?	Yes: → step **19** No: → step **20**
step 19	**Lower**: lower the CH flow temperature with the (∨)-button. **Higher**: increase the CH flow temperature with the (∧)-button.	
step 20	Has at least 10 seconds passed without a button being pressed and/or was mains supply interrupted ?	Yes: → step **22** No: → step **21**
step 21	Press the (menu)-button once.	
step 22	Any adjustments that you have made will now be confirmed.	→ step **1**

box 15 Boiler Functions

	Start phase	
step 1	Turn the mains switch to “ON”.	
step 2	Turn the operating switch on the DBA control panel of the boiler to position “**1**“ (ON) – see also box 11.	
step 3	Is a 3-way valve fitted?	Yes: → step **4** No: → step **6**
step 4	Is the 3-way valve set to “hot water mode”?	Yes: → step **5** No: → step **6**
step 5	The Boulter Buderus 24V AC external 3-way valve is turned to “heating mode” in 7.5 seconds, while an internal 3-way valve is turned to “heating mode” in 2 seconds.	
step 6	00 The display on the DBA control panel of the boiler is checked (maximum of one second).	
step 7	24 Current CH flow temperature, in °C. See also box 20.	
step 8	⊛ 0U The boiler begins to warm up. Start of pre purge phase. The fan runs for 15 seconds at about 60 % of maximum speed.	
	Checking phase	
step 9	Has the pre purge been completed correctly?	Yes: → step **11** No: → step **10**
step10	Deal with fault. The error code, which is now displayed, can be found in box 20. Deal with the fault.	
	Operating phase	
step11	⊛ 0H Operating code. See also box 20. The boiler is ready for operation. No current heat requirement.	
step12	Start of pump over-run time via the heating system. The pump over-run time: – via the heating system, factory-adjusted to 5 minutes; – via the external reservoir, set to 30-40 seconds; – via the plate heat exchanger (ECO), set to 30-40 seconds; – via the plate heat exchanger (warm start), set to 30 seconds; – after service mode, 1 minute.	
step13	Has the pump over-run time expired?	Yes: → step **18** No: → step **14**
step14	Is the boiler set to warm start for hot water and/or is an external storage-type water heater connected?	Yes: → step **15** No: → step **16**
step15	Is the plate heat exchanger triggered and/or is the temperature in the external storage-type water heater at least 5 °C below the temperature set at the DBA control panel?	Yes: → step **28** No: → step **16**
step16	Is there a current heat requirement from the (room) temperature controller?	Yes: → step **46** No: → step **19**
step17	Is the current CH flow temperature lower than 7 °C (frost protection)?	Yes: → step **62** No: → step **18**
step18	The pump stops.	
step19	Has the pump been out of use for more than 24 hours?	Yes: → step **23** No: → step **20**
step20	Is the plate heat exchanger triggered and/or is the temperature in the external storage-type water heater at least 5 °C below the temperature set at the DBA control panel?	Yes: → step **28** No: → step **21**
step21	Is there a current heat requirement from the (room) temperature controller?	Yes: → step **46** No: → step **22**

box 15	Boiler Functions	
step 22	Is the current CH flow temperature lower than 7 °C (frost protection)?	Yes: → step **62** No: → step **23**
step 23	The pump is run for 10 seconds in order to prevent it from seizing up.	
step 24	Have 10 seconds elapsed?	Yes: → step **18** No: → step **25**
step 25	Is the plate heat exchanger triggered and/or is the temperature in the external storage-type water heater at least 5 °C below the temperature set at the DBA control panel?	Yes: → step **28** No: → step **26**
step 26	Is there a current heat requirement from the (room) temperature controller?	Yes: → step **46** No: → step **27**
step 27	Is the current CH flow temperature lower than 7 °C (frost protection)?	Yes: → step **62** No: → step **24**
step 28	The symbol "" or "" for hot water mode on the DBA control panel display lights up.	
step 29	0C The fan runs at 49 % of capacity. The 3-way valve turns to the hot water setting for two seconds. The glow ignitor is activated for two seconds.	
step 30	0L Ignition phase: The gas valve is opened. The glow ignitor is activated for one second, followed by alternating half-second periods of inactivity and activity until five seconds have elapsed.	
step 31	Does the ionisation current exceed 1.4 µA (microamperes) within 5 seconds?	Yes: → step **32** No: → step **72**
step 32	-H The boiler is in hot water mode. If there has been a power cut: The startup load on the boiler is 49% for the first 13 seconds for the purposes of flow monitoring. It is then increased or decreased accordingly. The symbol " " lights up.	
step 33	Is the temperature in the plate heat exchanger higher than the temperature entered via the DBA control panel?	Yes: → step **39** No: → step **34**
step 34	Is the CH flow temperature 46 °C higher than the preset DHW temperature and/or higher than 93 °C?	Yes: → step **35** No: → step **32**
step 35	0Y The gas valve is closed and the burner is shut down.	
step 36	The symbol " " goes out.	
step 37	The fan stops after 30 seconds.	
step 38	Is the CH flow temperature lower than the preset DHW temperature plus 35°C?	Yes: → step **29** No: → step **38**
step 39	The gas valve is closed and the burner is shut down.	
step 40	The symbol goes out.	
step 41	Start of pump over-run time via the cylinder. Start of pre purge phase (10 seconds).	
step 42	The fan stops.	
step 43	0H The pump stops.	
step 44	The 3-way valve turns to the heating mode setting for two seconds. The symbol "" or "" goes out.	
step 45	Is there a current heat requirement from the (room) temperature controller?	Yes: → step **46** No: → step **19**
step 46	The symbol lights up.	
step 47	0C The fan runs at 49 % of capacity. The pump is started up. The glow ignitor is activated for seven seconds.	
step 48	0L Ignition phase: The gas valve is opened.	

box 15 Boiler Functions

step49	Does the ionisation current exceed 1.4 µA (microamperes)) within 5 seconds?	Yes:	→ step **50**
		No:	→ step **72**
step50	[-H] The boiler is in heating mode. The symbol 🔥 lights up. The startup load on the boiler is 49% for the first 13 seconds for the purposes of flow monitoring. It is then increased or decreased.		
step51	Is there a heating requirement from the (room) temperature controller?	Yes:	→ step **52**
		No:	→ step **57**
step52	Is the heat system flow temperature 6 °C higher than the target setting? (The target setting is entered at the DBA control panel if room-temperature adjustment is required)	Yes:	→ step **53**
		No:	→ step **50**
step53	(^) [0Y] The gas valve is closed and the burner is shut down.		
step54	The symbol 🔥 goes out.		
step55	The fan stops.		
step56	Is the CH flow temperature ≥ 6 °C lower than the target setting?	Yes:	→ step **47**
		No:	→ step **53**
step57	The symbol "🌡" goes out.		
step58	(^) [0H] The gas valve is closed and the burner is shut down.		
step59	The symbol "🔥" goes out.		
step60	Start of pump over-run time via the heating system. The pump over-run time via the heating system is 5 minutes. Start of the post purge phase of fan (10 seconds).		
step61	The fan stops.		→ step **13**
step62	The symbol "🌡" lights up.		
step63	(^) [0C] The fan starts up. The pump is started up. The glow ignitor is activated for seven seconds.		
step64	(^) [0L] Ignition phase: The gas valve is opened.		
step65	Does the ionisation current exceed 1.4 µA (microamperes) within 5 seconds?	Yes:	→ step **66**
		No:	→ box 36
step66	(^) [-H] The symbol "🔥" lights up. The boiler is in heating mode.		
step67	Is the current CH flow temperature higher than 15 °C?	Yes:	→ step **68**
		No:	→ step **67**
step68	The symbol "🌡" goes out.		
step69	(^) [0H] The gas valve is closed. The burner is shut down. The symbol 🔥 goes out.		
step70	Start of pump over-run time via the heating system. The pump over-run time via the heating system is 5 minutes. Start of the post purge phase of fan (10 seconds).		
step71	The fan stops.		→ step **13**

spares & parts online

box 16 Display icons

Display indication	Key to display indication
	Service mode
	Ionisation signal (flame monitoring)
	Hot water mode “ECO” setting or hot water requirement
	Hot water mode “warm start” setting or hot water requirement
	Standby, hot water mode to “warm start”
	Heating mode or heating requirement
	Summer operation, no heating mode, hot water only

box 17 Display readings

Display readings	Key to display reading	Unit	Range					Factory default setting
24	Current CH flow temperature	°C	30	–	80			

box 18 Control-panel settings

Button	Display Setting	Key to display setting	Unit	Range
1x	24	Service mode		
	Lo	Service mode, partial load	%	25
1x	Hi	Service mode, full load	%	100
1x		End service mode (or wait for 30 minutes)		
menu	Pr	Hot water mode Only applies to combi boilers [1]		= Hot water supply to ECO = Hot water mode to warm start
menu	60	DHW temperature	°C	40 – 60
menu	Pr	Heating mode		= Heating mode ON = Heating mode OFF
menu	80	CH flow temperature	°C	30 – 80

= flashing

[1] When it appears on the display at a system boiler, please connect a link between terminal 3 and 4 on the back side of the DBA control panel (hot water cylinder sensor) or make sure that the hot water cylinder sensor is fitted securely.

box 19 Displaycodes

Normaly you see the current CH flow temperature. By pushing the "∧"-button you will see the current operation code.

Blocking:

The boiler stops heating and will wait until the blocking is solved.

Locking:

Displaycode is blinking and also a blinking wrench "🔧" appears. The boiler stops heating and the pump is still running. The only way to stop the locking is by pushing the reset "⇆" button.

box 20 Display codes

Display indication					
	Display code	Key to display code	Reset required?	Other symptoms	Diagnosis
				No indication on DBA control panel display.	box 21
		Standby		Hot water mode to “warm start”.	box 21
^	0H			No (or insufficient) hot water, radiators, convectors, etc. may be heated without current heat requirement.	box 22
^	0H	Standby		Applies to boilers with hot water supply, hot water available, no heating operation. Applies to boilers without hot water supply, no heating operation.	box 23
^	0H	Standby		Applies to boilers with hot water supply, hot water available, no heating operation.	box 24
^	-H	Operating phase: The boiler is in heating mode.			
^	-H	Operating phase: The boiler is in hot water mode. The symbol “ 🔥 ” lights up.		The heating circuit is warmed up without a heat requirement.	box 22
^	0A	Operating phase: Pump over-run time via the external cylinder/hot water heater. The symbol “ 🔥 “ is off.		Pump over-run time: Heating system factory default setting = 5 minutes; for details of hot water and service mode see box 5.	
^	0A	Operating phase: The switch optimisation program is activated. This program is activated if there is, more frequently than once every 10 minutes, a heating water requirement from an RC or ON/OFF control signal. This means that the boiler cannot be restarted until at least 10 minutes have elapsed since initial startup of the burner.		The target room-temperature may not be reached.	box 25
^	0C	Pre-operative phase: The boiler prepares for burner startup whenever a heating requirement or hot water requirement arises.			
^	0E	Ready for operation: The boiler is in ready mode. There is a current heat requirement, but too much energy has been supplied.			
^	0H	Standby for operation: The boiler is in ready mode. There is no current heat requirement.		Heat request, but no respons of the boiler	box 285
^	0L	Ignition phase: The gas valve is activated.			
^	0U	Startup phase: The boiler starts up after activation of the mains power supply or completion of a system reset. This code is displayed for a maximum of 4 minutes.		Recycling phase: The fan runs for 15 seconds at about 60% of maximum speed. "Extraction of residual fumes in boiler"	
^	0Y	Operating phase: The flow sensor has detected that the current CH flow temperature is higher than the temperature entered at the control unit, or that it is higher than the CH flow temperature calculated according to heating requirements, or that it is higher than the CH flow temperature calculated for the purposes of hot water supply.		The target room-temperature may not be reached.	box 26
^	0Y	Fault: The flow sensor or safety sensor has detected that the current CH flow temperature is higher than 95°C.	No *1)*	The target room-temperature may not be reached.	box 27
	1C	Fault: The flue-gas STL (fume-monitoring device) has detected a temperature higher than 105°C. The flue-gas STL is opened.	Yes *2)*	No heating operation and no hot water.	box 28
^	2F	Fault: The flow sensor and safety sensor have, after burner startup, not detected any temperature increase in the heating water, or they have determined that the temperature difference between The flow sensor and safety sensor is too high.	No *1)*		box 27

1) This error code may deactivate again automatically after a specific time (without reset). Heating and hot water are now available once more.
2) In the event of this malfunction, the pump is started up and remains in continuous operation in order to minimise the possibility of the heating system freezing up.

box 20 Display codes

Display indication					
	Display code	Key to display code	Reset required?	Other symptoms	Diagnosis
	2P	Fault: The flow sensor has detected a temperature increase, in the heating system water, of over 5 °C/sec.	No *1)*		box 27
	3A	Fault: The tacho signal from the fan has failed during the operating phase.	No *1)*		box 29
	3L	Fault: The tacho signal from the fan is not present during the pre-operative or operating phase.	Yes *2)*	No heating operation and no hot water.	box 29
	3L	Fault: No current of air after a certain time.	Yes *2)*	No heating operation and no hot water.	box 30
	3Y	Fault: The fan runs too slowly or too fast.	Yes *2)*	No heating operation and no hot water.	box 31
	4A	Fault: The flow sensor and safety sensor have detected a CH flow temperature of over 105 °C.	Yes *2)*	No heating operation and no hot water.	box 32
	4E	Fault: The sensor test has failed.	Yes *2)*	No heating operation and no hot water.	box 33
	4L	Fault: The contacts of the flow sensor and safety sensor are shorted to each other, or there is a short-circuit to earth (ground), or the flow or safety sensor has detected a CH flow temperature of above 130 °C.	Yes *2)*	No heating operation and no hot water.	box 34
	4P	Fault: The contacts of the flow sensor or safety sensor are broken.	Yes *2)*	No heating operation and no hot water.	box 35
	6A	Fault: During the ignition phase, the system has detected an insufficient ionisation current.	No *1)*		box 36
	6A	Fault: After four startup attempts, the system has detected an insufficient ionisation current.	Yes *2)*	No heating operation and no hot water.	box 36
	6C	Fault: The system has detected an ionisation current before burner startup.	Yes *2)*	No heating operation and no hot water.	box 37
	6C	Fault: An ionisation current has been measured as soon as the burner shuts down.	Yes *2)*	No heating operation and no hot water.	box 38
	6L	Fault: The flame goes out during the operating phase.	No *1)*		
	7C	Fault: The power supply was shut off during a crucial breakdown.	Yes *2)*	No heating operation and no hot water.	box 39
	88	Operating phase: Display test during startup phase: The code is displayed for a maximum of 1 second.			
	9A	Fault: The DBA control panel is defective.	Yes *2)*	No heating operation and no hot water.	box 41
	9F	Fault: The contacts of the gas valve have been broken.	Yes *2)*	No heating operation and no hot water.	box 40
	9H	Fault: The DBA control panel is defective.	Yes *2)*	No heating operation and no hot water.	box 41
	9L	Fault: The contacts of the gas valve have been broken.	Yes *2)*	No heating operation and no hot water.	box 40
	9L	Fault: The DBA control panel is defective.	Yes *2)*	No heating operation and no hot water.	box 41

1) This error code may deactivate again automatically after a specific time (without reset). Heating and hot water are now available once more.
2) In the event of this malfunction, the pump is started up and remains in continuous operation in order to minimise the possibility of the heating system freezing up.

box 20 Display codes

Display indication					
	Display code	**Key to display code**	**Reset required?**	**Other symptoms**	**Diagnosis**
	9P	Fault: The DBA control panel is defective.	Yes *2)*	No heating operation and no hot water.	box 41
	9Y	Fault: Short circuit in the gas valve.	Yes		box 41
	EF	Fault: The contacts of the KIM (EEPROM on the DBA control panel circuit board) may be loose or short-circuited.	No *1)*	No heating operation and no hot water.	box 41
	E1 to E4 EA EC	Fault: The DBA control panel is defective.	Yes *2)*	No heating operation and no hot water.	box 41
^	rE	Fault: Reset is carried out. This code appears after the reset button ⇆ is pressed for 5 seconds.		Applies only to a system-blocking error (flashing display code)	

1) This error code may deactivate again automatically after a specific time (without reset). Heating and hot water are now available once more.
2) In the event of this malfunction, the pump is started up and remains in continuous operation in order to minimise the possibility of the heating system freezing up.

box 21		
	No indication on DBA control panel display.	
step 1	Check to ensure that the power supply cable to the mains switch box has been installed correctly.	
step 2	Is the power supply cable to the mains switch box correctly installed?	Yes: → step **4** No: → step **3**
step 3	Install the power supply cable correctly, see box 54.	→ box **42**
step 4	Check to ensure that the operating switch on the boiler DBA control panel is set to position “1” as per box 55.	
step 5	Is the operating switch on the boiler DBA control panel set to “I” (ON)?	Yes: → step **7** No: → step **6**
step 6	Turn the operating switch on the DBA control panel of the boiler to position “1” (ON), see box 55.	→ box **42**
step 7	Check to the ensure that there is a 230V AC power supply at the mains switch.	
step 8	Is there a 230V AC supply at the mains switch?	Yes: → step **10** No: → step **9**
step 9	Deal with any problem in the electrical system.	→ box **42**
step 10	Measure the resistance of the 230V AC power supply cable.	
step 11	Is the resistance of the 230V AC power supply cable within the specified limits?	Yes: → step **22** No: → step **21**
step 12	Replace the cable loom (or the affected part thereof).	→ box **42**
step 13	Use a multimeter to check the fuse on the inside of the DBA control panel, see box 62 to 65.	
step 14	Is the fuse working correctly?	Yes: → box **41** No: → step **15**
step 15	Replace fuse, see box 62.	
step 16	Is there any indication on the DBA control panel display?	Yes: → box **42** No: → step **17**
step 17	Turn the operating switch on the DBA control panel of the boiler to position “0” (OFF), see box 43.	
step 18	Disconnect the following boiler components from the electrical power supply: – pump, see box 92 – fan, see box 71, item 1.	
step 19	Check the fuse again for correct functioning. Use a multimeter to check the fuse on the inside of the DBA control panel, see box 62.	
step 20	Is the fuse working correctly?	Yes: → step **22** No: → step **21**
step 21	Replace fuse again, see box 62.	
step 22	Turn the operating switch on the DBA control panel of the boiler to position “1” (ON), see box 55.	
step 23	Is there any indication on the DBA control panel display?	Yes: → step **27** No: → step **24**
step 24	Use a multimeter to check the power supply cables of the pump (box 95), the fan (box 69) and the glow ignitor (box 137) for signs of short circuiting.	
step 25	Are the cables in order?	Yes: → step **27** No: → step **26**
step 26	Replace the cable harness (or the affected part thereof). Replace fuse again, see box 62.	→ box **42**
step 27	Turn the operating switch on the DBA control panel of the boiler to position “0” (OFF), see box 43.	
step 28	Connect the power supply plug of the pump in reverse.	
step 29	Turn the operating switch on the DBA control panel of the boiler to position “1” (ON), see box 55.	

box 21			
step 30	Is there any indication on the DBA control panel display?	Yes:	→ step **33**
		No:	→ step **31**
step 31	Replace the pump, see box 101.		→ step **32**
step 32	Replace fuse again, see box 62.		→ step **33**
step 33	Turn the operating switch on the DBA control panel of the boiler to position “0” (OFF), see box 43.		
step 34	Connect the power supply plug of the fan in reverse.		
step 35	Turn the operating switch on the DBA control panel of the boiler to position “1” (ON), see box 55.		
step 36	Is there any indication on the DBA control panel display?	Yes:	→ box **42**
		No:	→ step **37**
step 37	Replace fan, see box 76.		→ step **38**
step 38	Replace fuse again, see box 62.		→ box **42**

box 22			
No (or insufficient) hot water, radiators, convectors, etc. may be heated without current heat requirement.			
step 1	Set the operating switch on the boiler DBA control panel to position “0“ (OFF), see box 43, and set the other DBA control panel operating switch to position “1“ (ON), see box 55.		
step 2	Open a hot water tap.		
step 3	Check that the hot water pipe directly beneath the (external) storage-type water heater warms up.		
step 4	Does the pipe warm up (to approx. 60 °C)?	Yes:	→ step **5**
		No:	→ step **39**
step 5	The cause of this fault does not lie with the boiler, but with the mains water supply. Check to see if the MCW inlet and DHW outlet have been incorrectly connected to the (external) storage-type water heater.		
step 6	Are the pipes connected correctly?	Yes:	→ step **8**
		No:	→ step **7**
step 7	Connect the pipeworks correctly.		→ box **42**
step 8	Close the shut-off valve in the MCW inlet and open a hot water tap at random to see if water is still flowing.		
step 9	Is this the case?	Yes:	→ step **10**
		No:	→ step **11**
step 10	The cause is a defective (thermostat-controlled) mixer tap, a thermostat-controlled mixer valve or a short circuit between the hot- and cold water circuits.		→ box **42**
step 11	Check to see if any other external part of the drinking-water system is a possible cause.		
step 12	Are such items detected?	Yes:	→ step **13**
		No:	→ box **42**
step 13	Place the affected components out of service.		→ box **42**
step 14	Check to ensure that the pre-adjusted setting corresponds to the hot water 60 box 14 supply. to ensure that the DHW temperature is adjusted to a high enough setting, see box 61. to see if the hot water supply has been shut off by the control system (ModuLink 250 RF).		
step 15	Are the adjustment settings in order?	Yes:	→ step **17**
		No:	→ step **16**
step 16	Adjust the settings.		→ box **42**
step 17	Check to see if the “hot water mode” indicator ( ) or ( ) lights up on the display, see box 11.		
step 18	Does the “hot water mode” indicator ( ) or ( ) light up?	Yes:	→ step **25**
		No:	→ step **19**
step 19	Check the turbine flow-meter, see box 104, or DWH temperature sensor of any external storage-type water heater that might be fitted.		

box 22			
step 20	Is the turbine flow-meter working correctly (along with DHW temperature sensor of any external storage-type water that might be fitted)?	Yes:	→ step **22**
		No:	→ step **21**
step 21	Replace the turbine flow-meter, or DHW temperature sensor of any external storage-type water heater that might be fitted.		→ box **42**
step 22	Check the cable of the turbine flow-meter, see box 112, or cable of the DHW temperature sensor of any external storage-type water heater that might be fitted.		
step 23	Is the cable correctly connected and free of damage?	Yes:	→ box **41**
		No:	→ step **24**
step 24	Replace the cable loom (or the affected part thereof).		→ box **42**
step 25	Check to ensure that the boiler starts up to supply hot water, see box 15.		
step 26	Does the boiler start up?	Yes:	→ step **28**
		No:	→ step **27**
step 27	Interpret current display codes box 20 and deal with fault.		→ box **42**
step 28	Check to ensure that the tap flow rate is correctly adjusted, see box 180.		
step 29	Is the tap flow rate correctly adjusted?	Yes:	→ step **31**
		No:	→ step **30**
step 30	Correctly adjust the tap flow rate, see box 180.		
step 31	Is an **internal** 3-way valve fitted?	Yes:	→ step **34**
		No:	→ step **32**
step 32	Check the movement of the servomotor of the Boulter Buderus 24V AC external 3-way valve, see box 211.		
step 33	Does the servomotor of the Boulter Buderus 24V AC external 3-way valve move correctly?	Yes:	→ step **36**
		No:	→ step **63**
step 34	Check the movement of the servomotor of the **internal** 3-way valve, see box 181..		
step 35	Does the servomotor of the **internal** 3-way valve move correctly?	Yes:	→ step **39**
		No:	→ step **57**
step 36	Check to ensure that the the Boulter Buderus 24V AC external 3-way valve has been fitted correctly, see box 227.		
step 37	Has the Boulter Buderus 24V AC external 3-way valve been fitted correctly?	Yes:	→ step **69**
		No:	→ step **38**
step 38	Fit the Boulter Buderus 24V AC external 3-way valve in the correct way, see box 227.		→ box **42**
step 39	Check the drive mechanism of the **internal** 3-way valve, see box 195.		
step 40	Is the drive mechanism of the **internal** 3-way valve working correctly?	Yes:	→ step **42**
		No:	→ step **41**
step 41	Replace the drive mechanism of the **internal** 3-way valve, see box 198.		→ box **42**
step 42	Check the circulation for debris, see box 97.		
step 43	Is there any debris in the pump?	Yes:	→ step **44**
		No:	→ step **45**
step 44	Clean the pump, see box 97.		→ box **42**
step 45	The following components must be checked for soiling and/or damage: - combustion-air inlet pipework - heat exchanger - flue-gas pipework.		
step 46	Are the above-mentioned components clean and free of damage?	Yes:	→ step **48**
		No:	→ step **47**
step 47	Clean and/or replace the corresponding components.		→ box **42**

box 22			
step 48	Check the standing and working gas pressures, see box 230.		
step 49	Are the standing and working pressures correct?	Yes:	→ step **51**
		No:	→ step **50**
step 50	If the standing and working gas input pressures are not detected, consult your gas utility company.		→ box **42**
step 51	Check the gas/air ratio, see box 233.		
step 52	Is the gas/air ratio correct?	Yes:	→ step **54**
		No:	→ step **53**
step 53	Adjust the gas/air ratio, see box 233.		→ box **42**
step 54	Check the plate heat exchanger or the external hot water cylinder for furring.		
step 55	Is the plate heat exchanger or hot water cylinder furred up?	Yes:	→ step **56**
		No:	→ box **41**
step 56	Decalcify the plate heat exchanger and/or hot water cylinder, see from box 269.		→ box **42**
step 57	3-way valve: Check the startup of the servomotor of the **internal** 3-way valve, see box 181 and box 185.		
step 58	Does the servomotor of the **internal** 3-way valve start up correctly?	Yes:	→ step **59**
		No:	→ step **60**
step 59	Replace the servomotor of the **internal** 3-way valve, see box 190.		→ box **42**
step 60	Check the wiring of the **internal** 3-way valve, see box 191.		
step 61	Is the cable correctly connected and free of damage?	Yes:	→ box **41**
		No:	→ step **62**
step 62	Replace the cable loom (or the affected part thereof).		→ box **42**
step 63	Check to ensure that the Boulter Buderus 24V AC external 3-way valve has actuated correctly, see box 212 and box 228 parts 1 and 2.		
step 64	Does the Boulter Buderus 24V AC external 3-way valve actuate correctly?	Yes:	→ step **65**
		No:	→ step **66**
step 65	Replace the servomotor of the Boulter Buderus 24V AC external 3-way valve, see box 217.		→ box **42**
step 66	Check the wiring of the Boulter Buderus 24V AC external 3-way valve, see box 220.		
step 67	Is the wiring of the Boulter Buderus 24V AC external 3-way valve in correct condition?	Yes:	→ step **71**
		No:	→ step **68**
step 68	Replace the wiring of the Boulter Buderus 24V AC external 3-way valve.		→ box **42**
step 69	Check the drive mechanism of the Boulter Buderus 24V AC external 3-way valve, see box 221.		
step 70	Is the drive mechanism of the Boulter Buderus 24V AC external 3-way valve working correctly?	Yes:	→ step **42**
		No:	→ step **71**
step 71	Replace the drive mechanism of the Boulter Buderus 24V AC external 3-way valve, see box 221.		
step 72	Check the wiring of the Boulter Buderus 24V AC external 3-way valve between the connection box or moving plug-and-socket connection and the motor of the Boulter Buderus 24V AC external 3-way valve, see box 287.		
step 73	Is the wiring in order?	Yes:	→ box **41**
		No:	→ step **74**
step 74	Replace the cable loom (or the affected part thereof).		→ box **42**

box 23		
On combi boilers: hot water available, but no heating operation. On system boilers: no heating operation. **Hot water may be available, but no heating operation.**		
step 1	Check to ensure that the power supply cable to the mains switch box has been installed correctly, see box 54.	

box 23		
step 2	Check to ensure that the preset room temperature or heating configuration of the Boulter Buderus controls or ON/OFF controller has been adjusted to a high enough setting (see operating instructions).	
step 3	Is the preset room temperature or heating configuration of the Boulter Buderus controls or ON/OFF controller adjusted to a high enough setting?	Yes: → step **5** No: → step **4**
step 4	Adjust the preset room temperature controller or heating configuration of the Boulter Buderus controls or ON/OFF controller to a higher setting (see operating instructions).	→ box **42**
step 5	Check to see if the “heating requirement” ( ) indicator lights up on the display, see box 11.	
step 6	Does the “heating requirement” ( ) indicator light up?	Yes: → step **11** No: → step **7**
step 7	Check the Boulter Buderus controls or ON/OFF controller as per box 177.	
step 8	Is the Boulter Buderus controls or ON/OFF controller working correctly?	Yes: → step **9** No: → step **10**
step 9	Replace the thermostat cable.	→ box **42**
step 10	Replace the Boulter Buderus controls or ON/OFF controller.	→ box **42**
step 11	Check to ensure that the CH flow temperature at the DBA control panel or on the Boulter Buderus controls or ON/OFF controller is adjusted to a high enough setting as per box 14 and box 61 .	
step 12	Is the CH flow temperature adjusted to a high enough setting?	Yes: → step **13** No: → step **15**
step 13	Are enough thermostatic valves open on the radiators, convectors, etc?	Yes: → step **16** No: → step **14**
step 14	Open more thermostatic valves on the radiators, convectors, etc.	→ box **42**
step 15	Adjust the CH flow temperature as per box 14 and box 61. Ensure that the Boulter Buderus controls or ON/OFF controller are calling for a heating demand.	→ box **42**
step 16	Check to ensure that the CH flow temperature is correctly adjusted, see box 14.	
step 17	Is the CH flow temperature adjusted to a high enough setting?	Yes: → step **19** No: → step **18**
step 18	Adjust the CH flow temperature to a higher setting, see box 14.	→ box **42**
step 19	Is the CH flow temperature of the boiler sufficient to heat the building?	Yes: → step **21** No: → step **20**
step 20	Install a larger boiler.	→ box **42**
step 21	Is there a hot water supply?	Yes: → step **22** No: → box **41**
step 22	Is an **internal** 3-way valve fitted?	Yes: → step **23** No: → step **34**
step 23	Check the movement of the servomotor of the **internal** 3-way valve, see box 181.	
step 24	Does the servomotor of the **internal** 3-way valve move correctly?	Yes: → step **25** No: → step **28**
step 25	Check the drive mechanism of the **internal** 3-way valve, see box 195.	
step 26	Is the drive mechanism working correctly?	Yes: → box **42** No: → step **27**
step 27	Replace the drive mechanism of the **internal** 3-way valve, see box 198.	→ box **42**
step 28	Check the actuation of the servomotor of the **internal** 3-way valve, see box 185.	
step 29	Does the servomotor of the **internal** 3-way valve start up correctly?	Yes: → step **30** No: → step **31**

spares & parts online

box 23			
step 30	Replace the servomotor of the **internal** 3-way valve, see box 190.		→ box **42**
step 31	Check the power supply cable of the **internal** 3-way valve, see box 191.		
step 32	Is the power supply cable of the **internal** 3-way valve in good condition?	Yes:	→ box **41**
		No:	→ step **33**
step 33	Replace the cable loom (or the affected part thereof).		→ box **42**
step 34	Check the movement of the servomotor of the Boulter Buderus 24V AC external 3-way valve, see box 211.		
step 35	Does the servomotor of the Boulter Buderus 24V AC external 3-way valve operate correctly?	Yes:	→ step **36**
		No:	→ step **39**
step 36	Check to ensure that the the Boulter Buderus 24V AC external 3-way valve has been fitted correctly, see box 227.		
step 37	Has the Boulter Buderus 24V AC external 3-way valve been fitted correctly?	Yes:	→ step **45**
		No:	→ step **38**
step 38	Install the Boulter Buderus 24V AC external 3-way valve correctly, see box 227.		→ box **42**
step 39	Check to ensure that the Boulter Buderus 24V AC external 3-way valve is actuated correctly, see box 212 and box 228.		
step 40	Does the Boulter Buderus 24V AC external 3-way valve actuate correctly?	Yes:	→ step **41**
		No:	→ step **42**
step 41	Replace the servomotor of the Boulter Buderus 24V AC external 3-way valve, see box 217.		→ box **42**
step 42	Check the wiring of the Boulter Buderus 24V AC external 3-way valve, see box 220.		
step 43	Is the wiring of the Boulter Buderus 24V AC external 3-way valve in correct condition?	Yes:	→ step **47**
		No:	→ step **44**
step 44	Replace the wiring of the Boulter Buderus 24V AC external 3-way valve.		→ box **42**
step 45	Check the drive mechanism of the Boulter Buderus 24V AC external 3-way valve, see box 221.		
step 46	Is the drive mechanism of the Boulter Buderus 24V AC external 3-way valve working correctly?	Yes:	→ box **41**
		No:	→ step **47**
step 47	Replace the internal components of the Boulter Buderus 24V AC external 3-way valve, see box 224.		→ box **42**
step 48	Check the wiring of the Boulter Buderus 24V AC external 3-way valve between the connection box or moving plug-and-socket connection and the DBA control panel as per box 287.		

box 24

On combi boiler supply: hot water available, but no heating operation.
On system boiler supply: no heating operation.
Hot water may be available, but no heating operation.

step 1	Check to ensure that the power supply cable to the RTH converter/Junction box has been installed correctly, see box 285.		
step 2	Is the 230V connection to the RTH converter/Junction box fitted correctly?	Yes:	→ step **4**
		No:	→ step **3**
step 3	Correctly attach the switch live to terminal 1 and Neutral to terminal 2 on the 230V connector, see box 285.		
step 4	Disconnect black leads from terminals 1 & 2 on the back of the DBA and test for continuity between the two leads. **No continuity** check S/L and N connections are made correctly and that there is 230v between the two. Replace RTH converter/Junction box. **Continuity** reconnect the cables to terminals 1 & 2 and check the connections between the terminals and the DBA.		→ box **42**
step 5	Is the volt free connection to the RTH converter/Junction box fitted correctly?	Yes:	→ step **6**
		No:	→ step **8**
step 6	Check to ensure that the connections of the external control unit are attached to terminal 1 and 2 of the connection block, indicated by a clock inside a rectangle, see box 286 and box 285 (item 3).		

box 24			
step 7	Is there a permanent link between terminal 1 and 2 on the volt free connecter?	Yes:	→ step **8**
		No:	→ step **9**
step 8	Check the cable connection between the RTH converter/Junction box and terminal 1 and 2 on the DBA.		→ box **42**
step 9	Check the external cable connections and control devices.		
step 10	Has the malfunction been repaired?	Yes:	→ box **42**
		No:	→ box **41**

box 25			
	The switch optimisation program is activated. This program is activated if there is, more frequently than once every 10 minutes, a heating water requirement from an Boulter Buderus controller or ON/OFF controller signal. This means that the boiler cannot be restarted until at least 10 minutes have elapsed since initial startup of the burner. Operating code		
step 1	Check to ensure that the connections of the control device are correctly fitted at the boiler and control device.		
step 2	Is the control device connected correctly?	Yes:	→ step **4**
		No:	→ step **3**
step 3	Connect the control device correctly.		→ box **42**
step 4	Carry out a visual examination where possible, and use a multimeter to check the electrical resistance of the thermostat lead. Check for breakages and loose contacts.		
step 5	Is the thermostat cable in good condition?	Yes:	→ step **7**
		No:	→ step **6**
step 6	Replace the thermostat cable.		→ box **42**
step 7	Check to ensure that enough thermostatic valves are open on the radiators, convectors, etc.		
step 8	Are enough thermostatic valves open on the radiators, convectors, etc?	Yes:	→ step **10**
		No:	→ step **9**
step 9	Open more thermostatic valves on the radiators, convectors, etc.		→ box **42**
step 10	Attempt to rectify the fault by temporarily replacing the room thermostat or external temperature-dependent controller.		
step 11	Has the malfunction been repaired?	Yes:	→ box **42**
		No:	→ box **41**

box 26			
	The flow NTC sensor has detected that the current CH flow temperature is higher than the temperature entered at the control unit, or that it is higher than the CH flow temperature calculated according to heating requirements, or that it is higher than the CH flow temperature calculated for the purposes of hot water supply. Operating code		
step 1	Check to ensure that the CH flow temperature at the DBA control panel is higher than that entered at the controller, see box 61.		
step 2	Is the CH flow temperature at the DBA control panel adjusted correctly?	Yes:	→ step **4**
		No:	→ step **3**
step 3	Adjust the CH flow temperature at the DBA control panel to a higher setting, see box 61.		→ box **42**
step 4	Check to ensure that enough thermostatic valves are open on the radiators, convectors, etc.		
step 5	Are enough thermostatic valves open on the radiators, convectors, etc?	Yes:	→ step **7**
		No:	→ step **6**
step 6	Open more thermostatic valves on the radiators, convectors, etc.		→ box **42**
step 7	Check to see if a hot tap or taps have been opened on brief, consecutive occasions.		

box 26			
step 8	Have a hot water tap or taps been opened briefly and consectutively on several occasions?	Yes:	→ step **9**
		No:	→ box **15**
step 9	Inform the user that the fault has been caused by opening hot taps on many brief, consecutive occasions.		→ box **42**
step 10	Check the electrical resistance of the DHW temperature sensor, see box 104.		
step 11	Is the electrical resistance of the DHW temperature sensor in order?	Yes:	→ box **41**
		No:	→ step **12**
step 12	Replace the DHW temperature sensor.		

box 27		
04	**The flow NTC sensor or safety sensor has detected that the current CH flow temperature is higher than 95 °C.** Blocking boiler-fault code	
2F	**The flow NTC sensor and safety sensor have not, after burner startup, detected any temperature increase in the heating system water, or the temperature difference between the flow NTC sensor and safety sensor is excessive.** Blocking boiler-fault code	
2P	**The flow NTC sensor has detected a temperature increase in the heating system water of more than 5 °C/sec.** Blocking boiler-fault code	
4A	**The flow NTC sensor and safety sensor have detected a CH flow temperature of over 105 °C.** Locking boiler-fault code	
4E	**Short circuit between flow NTC sensor or safety sensor.** Locking boiler-fault code	

step 1	Are the servicing valves open?	Yes:	→ step **3**
		No:	→ step **2**
step 2	Open the servicing valves, see box 53.		
step 3	Is the pressure in the heating system at least 1 bar?	Yes:	→ step **5**
		No:	→ step **4**
step 4	Fill and vent the heating system, see box 52.		
step 5	Are enough thermostatic valves open on the radiators, convectors, etc?	Yes:	→ step **7**
		No:	→ step **6**
step 6	Open more thermostatic valves on the radiators, convectors, etc.		→ box **42**
step 7	Check the flow NTC sensor and safety sensor, see box 104.		
step 8	Are the flow NTC sensor and safety sensor in order?	Yes:	→ step **10**
		No:	→ step **9**
step 9	Replace the flow NTC sensor or safety sensor, see box 116.		→ box **42**
step 10	Check the cable between the flow NTC sensor or safety sensor for short circuits, see box 112.		
step 11	Check the pump, see box 89 to 100.		
step 12	Is the pump working correctly?	Yes:	→ step **14**
		No:	→ step **13**
step 13	Replace the pump, see box 101.		
step 14	Check to ensure that the internal by-pass valve in the boiler or the external overflow valve in the heating system are working correctly. Possible to adjust external overflow valve to max. 25 kPa (if fitted).		
step 15	Is the by-pass valve working correctly?	Yes:	→ box **41**
		No:	→ step **14**

box 27		
step 16	Replace the by-pass valve.	→ box **42**

box 28		
	The flue-gas STL (fume-monitoring device) has detected a temperature higher than 105°C. The flue-gas STL is open. Locking boiler-fault code	
step 1	Check to ensure that the restrictor baffle has been installed as per box 261, item 1.	
step 2	Has the restrictor baffle been fitted?	Yes: → step **4** No: → step **3**
step 3	Fit the restrictor baffle, see box 261, item 1.	→ box **42**
step 4	Check the entire system of flue gas pipe for restrictions.	
step 5	Is the entire system of flue gas pipe in full working order?	Yes: → step **7** No: → step **6**
step 6	Deal with restriction.	→ box **42**
step 7	Check the flue-gas STL, see box 120.	
step 8	Is the flue-gas STL working correctly?	Yes: → step **10** No: → step **9**
step 9	Replace the flue-gas STL, see box 129.	
step 10	Check the wiring of the flue-gas STL, see box 126.	
step 11	Is the wiring of the flue-gas STL in full working order?	Yes: → box **41** No: → step **12**
step 12	Replace the cable loom (or the affected part thereof).	→ box **42**

box 29		
	The tacho signal from the fan has failed during the operating phase. Blocking boiler-fault code	
	The tacho signal from the fan is not present during the pre-operative or operating phase. Locking boiler-fault code	
step 1	Check to ensure that both plug-and-socket connections of the fan are correctly fitted, see box 246, item 1.	
step 2	Are the plug-and-socket connections fitted correctly?	Yes: → step **4** No: → step **3**
step 3	Reconnect the plug-and-socket connection of the fan.	→ box **42**
step 4	Check fan, 230V AC supply, see box 66 or box 287.	
step 5	Does activation take place correctly?	Yes: → step **9** No: → step **6**
step 6	Check the power supply cable of the fan (230V AC), see box 69.	
step 7	Is the power supply cable of the fan in full working order?	Yes: → box **41** No: → step **8**
step 8	Replace the cable loom (or the affected part thereof).	→ box **42**
step 9	Check tacho cable of fan, see box 73.	
step 10	Is the tacho cable in full working order?	Yes: → step **12** No: → step **11**
step 11	Replace the cable loom (or the affected part thereof).	→ box **42**
step 12	Check to ensure that the mains voltage at the earthed (grounded) plug is between 195V and 253V AC.	

box 29			
step 13	Is the mains voltage sufficient?	Yes:	→ step **15**
		No:	→ step **14**
step 14	The cause of the fault lies in the electrical system.		→ box **42**
step 15	Replace fan, see box 76.		
step 16	Has the malfunction been repaired?	Yes:	→ box **42**
		No:	→ box **41**

box 30			
	3L **No current of air after a certain time.** Locking boiler-fault code		
step 1	Attempt to rectify the fault by temporarily replacing the fan, see box 76.		
step 2	Has the malfunction been repaired?	Yes:	→ box **42**
		No:	→ box **41**

box 31			
	34 **The fan runs too slowly or too fast.** Locking boiler-fault code		
step 1	Check the plug-and-socket connection of the fan tacho cable. This is the narrow plug, see box 78, item 2.		
step 2	Is the plug-and-socket connection in full working order?	Yes:	→ step **4**
		No:	→ step **3**
step 3	Reconnect the plug-and-socket connection, see box 78, item 2.		→ box **42**
step 4	Check tacho cable of fan, see box 73.		
step 5	Is the tacho cable in full working order?	Yes:	→ step **7**
		No:	→ step **6**
step 6	Replace the tacho cable.		→ box **42**
step 7	Check to ensure that the mains voltage at the earthed (grounded) plug is between 195V and 253V AC.		
step 8	Is the mains voltage sufficient?	Yes:	→ step **10**
		No:	→ step **9**
step 9	The cause of the fault lies in the electrical system.		→ box **42**
step 10	Check to see if there is a restriction in the fan, burner, heat exchanger or flue-gas system.		
step 11	Is there a restriction?	Yes:	→ step **12**
		No:	→ step **13**
step 12	Deal with restriction.		→ box **42**
step 13	Check to see if there is a second fan in the flue gas pipe or air inlet system.		
step 14	Is a second fan fitted?	Yes:	→ step **15**
		No:	→ step **16**
step 15	Take second fan out of service.		→ box **42**
step 16	Check to see if the fan impeller has come loose at the motor spindle, see box 76.		
step 17	Has the fan come loose?	Yes:	→ step **18**
		No:	→ step **19**
step 18	Replace fan, see box 76.		
step 19	Has the malfunction been repaired?	Yes:	→ box **42**
		No:	→ box **41**

box 32		
4A	**The flow NTC sensor has detected a temperature of over 105 °C.** Locking boiler-fault code	
step 1	Check the flow rate in the heating circuit.	
step 2	Are all servicing valves and thermostat valves closed?	Yes: → step **4** No: → step **3**
step 3	Check all servicing valves and thermostat valves for correct functioning	
step 4	Open all servicing valves and thermostat valves.	
step 5	Has the malfunction been repaired?	Yes: → box **42** No: → box **41**

box 33		
4E	**The sensor test has failed.** Locking boiler-fault code	
step 1	Check the flow NTC sensor and safety sensor and their wiring for short circuits, see box 104 to 115 and box 287.	
step 2	Are the flow NTC sensor and safety sensor, along with their wiring, in correct working order?	Yes: → box **41** No: → step **3**
step 3	Replace the flow NTC sensor, safety sensor, cable loom or corresponding component of the cable loom, see box 116.	→ box **42**

box 34		
4L	**The contacts of the flow NTC sensor and safety sensor are shorted to each other, or there is a short-circuit to earth (ground), or the flow or safety sensor has detected a CH flow temperature of above 130 °C.** Locking boiler-fault code	
step 1	Are the servicing valves open?	Yes: → step **3** No: → step **2**
step 2	Open the servicing valves, see box 53.	
step 3	Is the pressure of the heating system water at least 1 bar?	Yes: → step **5** No: → step **4**
step 4	Fill and vent the heating system, see box 52.	
step 5	Are enough thermostatic valves open on the radiators, convectors, etc?	Yes: → step **7** No: → step **6**
step 6	Open more thermostatic valves on the radiators, convectors, etc.	→ box **42**
step 7	Check the flow NTC sensor and safety sensor, see box 104.	
step 8	Are the flow NTC sensor and safety sensor functioning correctly?	Yes: → step **10** No: → step **9**
step 9	Replace the flow NTC sensor or safety sensor, see box 116.	
step 10	Check the cables of the flow NTC sensor and safety sensor, see box 112.	
step 11	Are the cables in order?	Yes: → step **13** No: → step **12**
step 12	Replace the cable loom (or the affected part thereof).	→ box **42**
step 13	Check the pump, see box 89 to 100.	
step 14	Is the pump working correctly?	Yes: → box **41** No: → step **15**

box 34		
step 15	Replace the pump, see box 101.	→ box **42**

box 35		
4P	**The contacts of the flow NTC sensor or safety sensor are broken.** Locking boiler-fault code	
step 1	Check the flow NTC sensor and safety sensor, see box 104.	
step 2	Are the flow NTC sensor and safety sensor functioning correctly?	Yes: → step **4** No: → step **3**
step 3	Replace the flow NTC sensor and safety sensor, see box 116.	
step 4	Check the cable of the flow NTC sensor and safety sensor, see box 112.	
step 5	Are the cables in order?	Yes: → box **41** No: → step **6**
step 6	Replace the cable loom (or the affected part thereof).	→ box **42**

box 36		
^ 6A	**The system has detected an insufficient ionisation current during the ignition phase.** Blocking boiler-fault code	
6A	**The system has detected an insufficient ionisation current after four startup attempts.** Locking boiler-fault code	
step 1	Is the heating system propane gas-fired?	Yes: → step **2** No: → step **3**
step 2	Ensure that no nitrogen remains in the gas tank or gas flow pipes. You should also consult your gas utility company.	→ step **63**
step 3	Check whether the gas tap is open, see box 59.	
step 4	Is the gas tap open?	Yes: → step **6** No: → step **5**
step 5	Open the gas tap, see box 59.	→ step **63**
step 6	Check the static and working gas pressure, see box 230.	
step 7	Are the static and working gas pressures correct?	Yes: → step **14** No: → step **8**
step 8	Check to see if there is a restriction in the pipework between the gas tap and gas valve.	
step 9	Is there a restriction?	Yes: → step **10** No: → step **11**
step 10	Deal with restriction.	→ step **63**
step 11	Check for restrictions in the remaining section of the gas flow pipe.	
step 12	Is there a restriction?	Yes: → step **13** No: → step **38**
step 13	Deal with restriction.	→ step **63**
step 14	Has the gas flow pipe been bled of air?	Yes: → step **16** No: → step **15**
step 15	Vent the gas flow pipe of air, see box 239.	→ step **62**
step 16	Check to see if the glow ignitor activates with the operating code ^ 0C, see box 130.	
step 17	Does the glow ignitor activate with the operating code ^ 0C?	Yes: → step **21** No: → step **18**

box 36		
step 18	Check the power supply cable of the glow ignitor, see box 137.	
step 19	Is the power supply cable in full working order?	Yes: → box **41** No: → step **20**
step 20	Replace the cable loom (or the affected part thereof).	→ step **62**
step 21	Check the electrical resistance of the glow ignitor, see box 134.	
step 22	Is the electrical resistance of the glow ignitor in order?	Yes: → step **24** No: → step **23**
step 23	Replace the glow ignitor, see box 140.	→ step **62**
step 24	Place the boiler in full-load operation, see box 13, and check whether the glow ignitor activates with the operating code ⊛ 0C .	
step 25	Does the glow ignitor activate with the operating code ⊛ 0C ?	Yes: → step **26** No: → step **23**
step 26	Connect a digital pressure gauge, see box 233 and 234. Open the gas cock and place the boiler into operation, see box 59 or box 13. Check whether the gas valve opens with the operating code ⊛ 0L .	
step 27	Does the gas valve open with the operating code ⊛ 0L ?	Yes: → step **41** No: → step **28**
step 28	Check the plug-and-socket connection on the gas valve, see box 161.	
step 29	Is the plug-and-socket connection in full working order?	Yes: → step **31** No: → step **30**
step 30	Reconnect the plug-and-socket connection at the gas valve.	→ step **62**
step 31	Check whether the gas valve receives power with the operating code ⊛ 0L , see box 164.	
step 32	Does the gas valve receive power?	Yes: → step **33** No: → step **34**
step 33	Replace the gas valve, see box 174.	→ step **62**
step 34	Check the power supply cable of the gas valve, see box 167.	
step 35	Is the wiring in order?	Yes: → box **41** No: → step **36**
step 36	Replace the cable loom (or the affected part thereof).	→ step **62**
step 37	Check whether the incoming gas supply is of sufficient capacity.	
step 38	Is the incoming gas supply of sufficient capacity?	Yes: → step **40** No: → step **39**
step 39	Upgrade internal pipe work.	→ step **62**
step 40	Consult your gas utility company accordingly.	→ step **62**
step 41	Measure the gas/air ratio during the startup phase, see box 233.	
step 42	Is the gas/air ratio correctly adjusted?	Yes: → step **44** No: → step **43**
step 43	Adjust the gas/air ratio, see box 233.	→ step **62**
step 44	Check to ensure that the correct gas injector, see box 83, item 1, and the correct Venturi, see box 87, item 1, are fitted as specified. See also box 5.	
step 45	Is the correct gas injector and Venturi fitted?	Yes: → step **47** No: → step **46**
step 46	Fit the correct gas injector and/or Venturi, see box 5.	→ step **62**

box 36

step 47	The following components must be checked for soiling, damage and/or correct installation: – condensate trap and syphon, see box 256 – combustion-air inlet pipework – air silencer pipework – seal between the Venturi and fan – Venturi, see box 86 – gas injector, see box 83, item 1 – fan – connection between the fan and burner – burner – heat exchanger – system of flue-gas pipe and air inlet pipeworks – pressure control valve, see box 85 – earth (ground) lead of ionisation circuit, see box 160.		
step 48	Are the above-mentioned components clean, free of damage and/or correctly intalled?	Yes:	→ step **50**
		No:	→ step **49**
step 49	Clean, replace and/or correctly install the components concerned.		→ step **62**
step 50	Measure the ionisation current, see box 143.		
step 51	Is the ionisation current in order?	Yes:	→ step **62**
		No:	→ step **52**
step 52	Check the plug-and-socket connection between the ionisation electrode and cable loom, see box 144.		
step 53	Is the plug-and-socket connection in full working order?	Yes:	→ step **55**
		No:	→ step **54**
step 54	Correctly insert the plug into its socket		→ step **62**
step 55	Check the cable of the ionisation electrode, see box 151.		
step 56	Is the wiring in order?	Yes:	→ step **58**
		No:	→ step **57**
step 57	Replace the cable loom (or the affected part thereof).		→ step **62**
step 58	Check the ionisation electrode and replace as required, see box 155.		→ step **62**
step 59	Temporarily disconnect the flue-gas pipework from the top of the boiler. Run the boiler at low mode, see box 13. Check to see if the fault has been rectified.		
step 60	Has the malfunction been repaired?	Yes:	→ step **61**
		No:	→ step **62**
step 61	The cause of the fault lies in the flue-gas system. Take the boiler out of operation.		→ box **42**
step 62	Switch the boiler off and then on again at the operating switch.		
step 63	Is the error code still displayed?	Yes:	→ step **64**
		No:	→ box **42**
step 64	Has an error ⊛ 6A reoccurred?	Yes:	→ step **66**
		No:	→ step **65**
step 65	Interpret the display code with box 20 and deal with the fault.		
step 66	Has the entire table box 36 been covered?	Yes:	→ box **41**
		No:	→ step **1**

box 37

6C	**The system has detected an ionisation current before burner startup.** Locking boiler-fault code	
step 1	Is the ionisation current displayed?	Yes: → step **2** No: → step **1**
step 2	Disconnect the plug-and-socket connection, see box 144.	
step 3	Is the ionisation current still displayed?	Yes: → step **12** No: → box **41**
step 4	Check the plug-and-socket connection between the ionisation electrode and cable loom, see box 144.	
step 5	Is the plug-and-socket connection in full working order?	Yes: → step **7** No: → step **6**
step 6	Correctly insert the plug into its socket.	→ step **11**
step 7	Check the cable of the ionisation electrode, see box 151.	
step 8	Is the wiring in order?	Yes: → step **10** No: → step **9**
step 9	Replace the cable loom (or the affected part thereof).	→ step **13**
step 10	Check the ionisation electrode, see box 149 or box 155.	→ box **42**
step 11	Is the ionisation electrode working correctly?	Yes: → step **14** No: → step **12**
step 12	Replace the ionisation electrode, see box 155.	→ box **42**
step 13	Switch the boiler off and then on again at the operating switch.	
step 14	The following components should be checked for soiling, damage and/or correct installation: - syphon, see box 256 - flue-gas pipework.	
step 15	Check the pressure control valve, see box 85.	
step 16	Is the pressure control valve working correctly?	Yes: → box **41** No: → step **17**
step 17	Replace or clean the pressure control valve, see box 85.	→ box **42**

box 38

6C	**An ionisation current has been measured as soon as the burner shuts down.** Locking boiler-fault code	
step 1	Connect a digital pressure gauge, see box 233 and 234. Open the gas cock and place the boiler into full-load operation, see box 59 or box 13. Deactivate the heat requirement as per flue-gas test (box 13), and check to see if the burner remains under pressure after the “heat requirement” symbol on the DBA control panel goes out.	
step 2	Is the burner still under pressure?	Yes: → step **4** No: → step **3**
step 3	Check the ionisation electrode, see box 37.	
step 4	Close the gas cock, see box 46. Remove the digital pressure gauge and close the burner-pressure connection nipple. Open the gas cock, see box 59, and run the boiler at full load once more, see box 59 or box 13. Deactivate heat requirement, see box 13, and check to see if the gas valve is still powered after the “heat requirement” indicator goes out, see box 165, item 1 and 2.	
step 5	Is the gas valve still powered?	Yes: → box **41** No: → step **6**
step 6	Replace the gas valve, see box 174.	

box 39		
7C	**The power supply was shut off during operation.** Locking boiler-fault code	
step 1	Reset the boiler with button "⊖", or by turning the operating switch to "OFF" and then "ON" again.	
step 2	Is the error code still displayed?	Yes: → step **3** No: → box **42**
step 3	Interpret the fault code now displayed in box 20 and deal with the malfunction.	

box 40		
9F 9L	**The contacts of the gas valve have been broken.** Locking boiler-fault code	
step 1	Check the plug-and-socket connection of the gas valve, see box 161.	
step 2	Is the plug-and-socket connection in full working order?	Yes: → step **4** No: → step **3**
step 3	Reconnect the plug-and-socket connection, see box 161.	→ box **42**
step 4	Measure the cable between the gas valve and DBA control panel, see box 164.	
step 5	Is the cable correctly connected and free of damage?	Yes: → step **7** No: → step **6**
step 6	Replace the cable loom (or the affected part thereof).	→ box **42**
step 7	Measure the resistance of the gas valve coils, see box 171.	
step 8	Is the resistance correct?	Yes: → box **41** No: → step **9**
step 9	Replace the gas valve, see box 174.	→ box **42**

box 41		
	Bad electrical contacts, circuit board or EEPROM (KIM) of DBA control panel defective.	
step 1	Check the contacts on the circuit board of the DBA control panel by pushing fully home the plug-and-socket connections on the board; check and deal with any other contact problems with plug-and-socket connections.	
step 2	Switch the boiler off and then on again at the operating switch.	
step 3	Is same fault warning message still displayed?	Yes: → step **4** No: → step **8**
step 4	Check the plug-and-socket connection on the EEPROM (KIM), see box 284.	
step 5	Has the DBA control panel been replaced?	Yes: → step **7** No: → step **6**
step 6	Replace the DBA control panel, see box 281.	→ step **2**
step 7	Contact Boulter Buderus (see on the back of this manual).	
step 8	Has a new fault occurred?	Yes: → step **9** No: → box **42**
step 9	Interpret the fault code now displayed in box 20 and deal with the malfunction.	

box 42

step 1	Fit the casing to the boiler.	
step 2	Turn the mains switch on the DBA control panel of the boiler to position “0” (OFF), see box 43.	
step 3	Turn the mains switch on the DBA control panel of the boiler to position “1” (ON), see box 55.	

The fault is now rectified.
Your Buderus 500 should be working now.

box 43 Shutting down

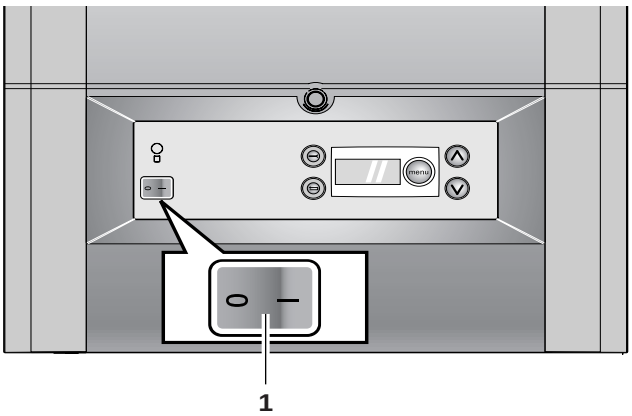

- Turn the mains switch on the boiler to position "**0**" (OFF, item 1).

box 44

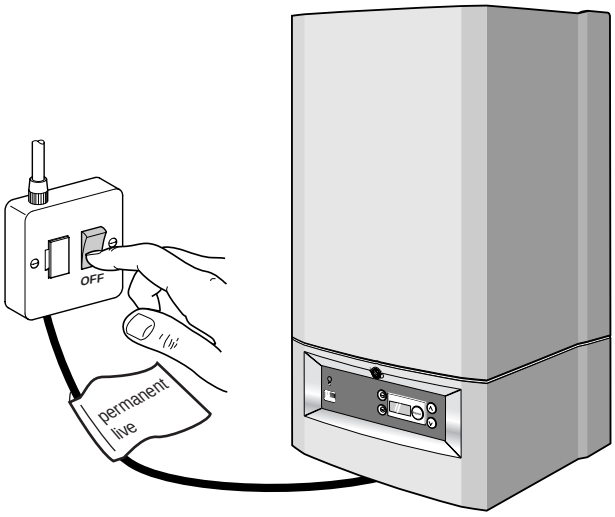

- Turn the mains switch to "OFF".

box 45

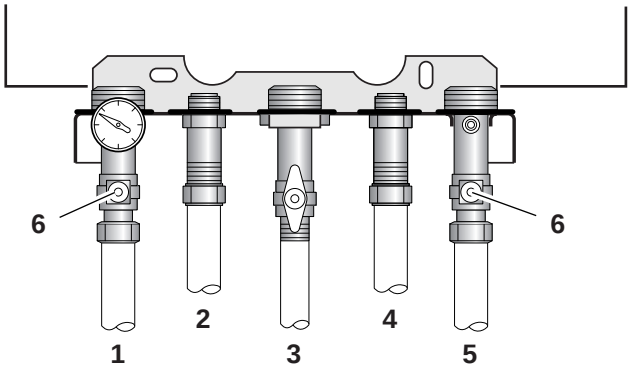

Key to terms (see box 4):

1 = CH flow
2 = DHW outlet (combination boilers only)
3 = Gas connection
4 = MCW inlet (combination boilers only)
5 = CH return

- Close the servicing valves (item 6), if fitted.

box 46

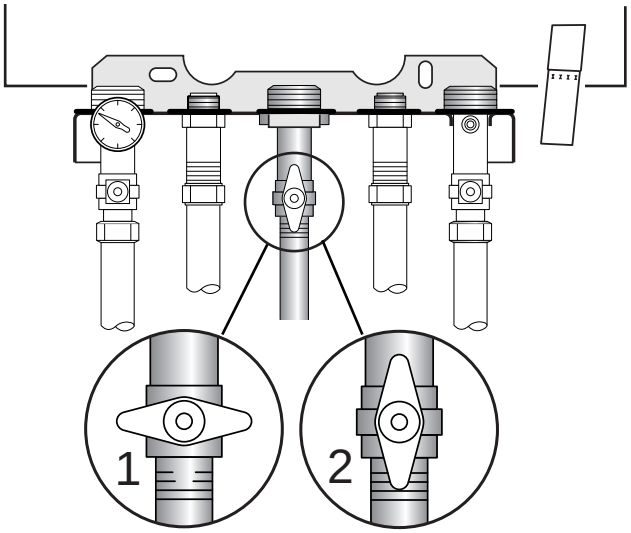

- Close the gas cock (item 1).

box 47 Removal of casing

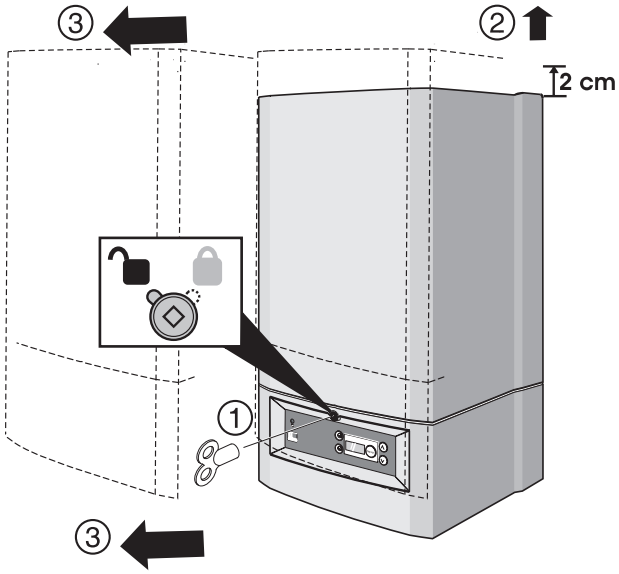

- Use a radiator key to turn the casing lock to "open", then remove casing.

box 48 Draining the system

- Take the boiler out of operation, see box 43, 44, 45, 46 or 47.

box 49

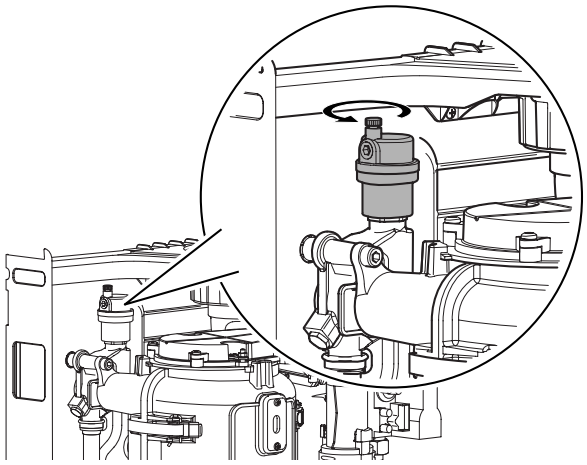

- Loosen by one turn the sealing cap on the automatic air vent located on the top left-hand part of the boiler.

box 50

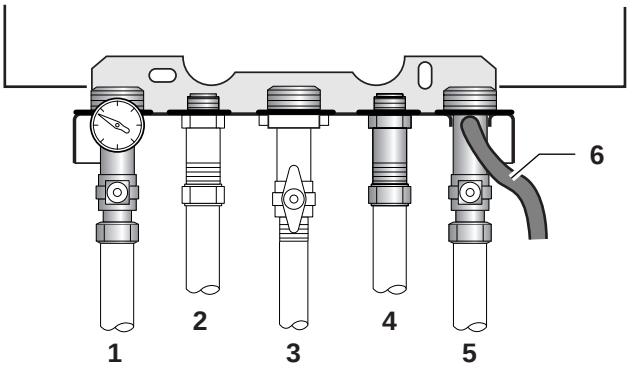

Key to terms:

1 = CH flow
2 = DHW outlet (combination boilers only)
3 = Gas connection
4 = MCW inlet (combination boilers only)
5 = CH return

- Connect the hose (item 6) to the drain cock of the boiler.
- Open the filling and draining cock and drain the heating system, see box 53.

box 51

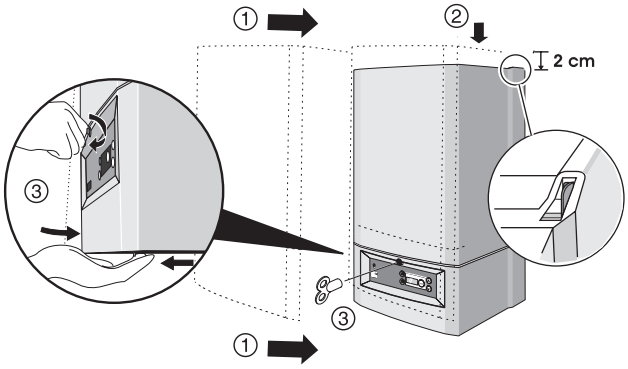

- Fit the casing and use the radiator key to turn the casing lock to “closed”.

box 52 Filling the system and venting it of air

- Turn the operating switch on the boiler to position “**0**” (OFF), see box 43.
- Remove casing, see box 47.

box 53

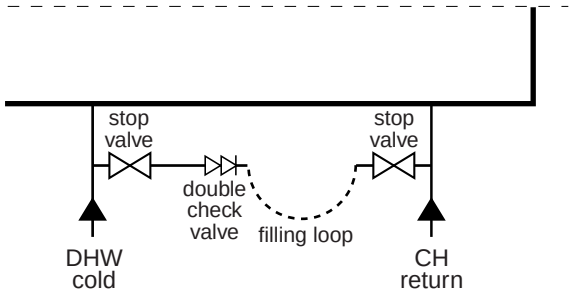

- Connect filling loop (accessory), see box 50, item 6.
- Open both stop valves.
- Fill the system to a pressure of approx. 1.5 bar.
- Shut both stop valves.
- Disconnect the filling loop.
- Vent all radiators from air starting with the lowest radiator and working your way up to the highest point.
- Check the pressure after venting. If the pressure has dropped under 1.0 bar then top up the system as described previously.
- Disconnect the filling loop and cap off.

box 54

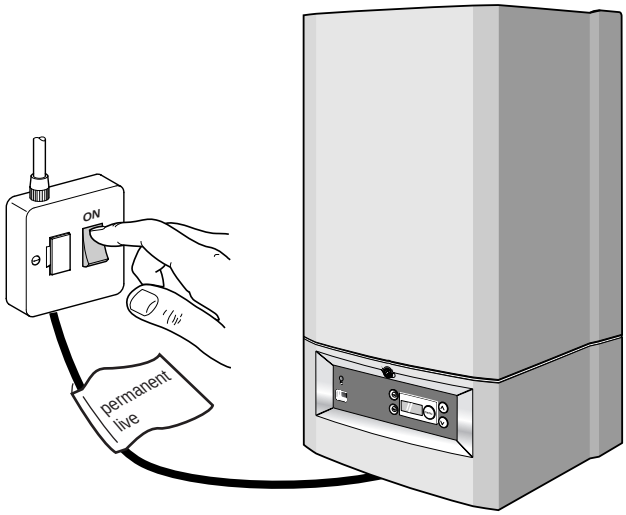

- Turn the mains switch to “ON”.

box 55

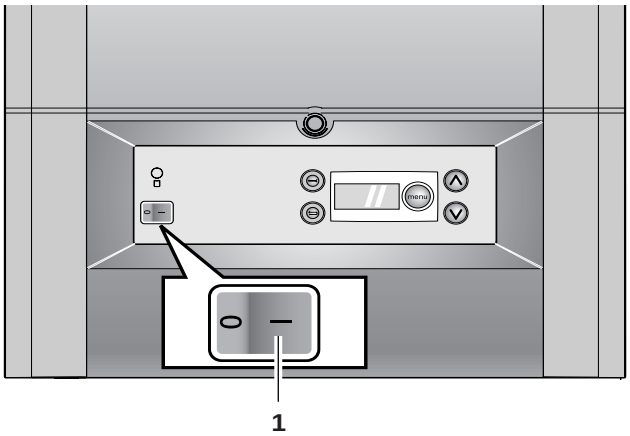

- Turn the operating switch on the boiler to position “**1**” (ON, item 1).

box 56

- Fill the heating system to a pressure of approximately 1.5 bar, then close the filling loop.
- Vent all the air vent points in the heating system, working from bottom to top, in order to allow all air in the heating system to escape.

box 57

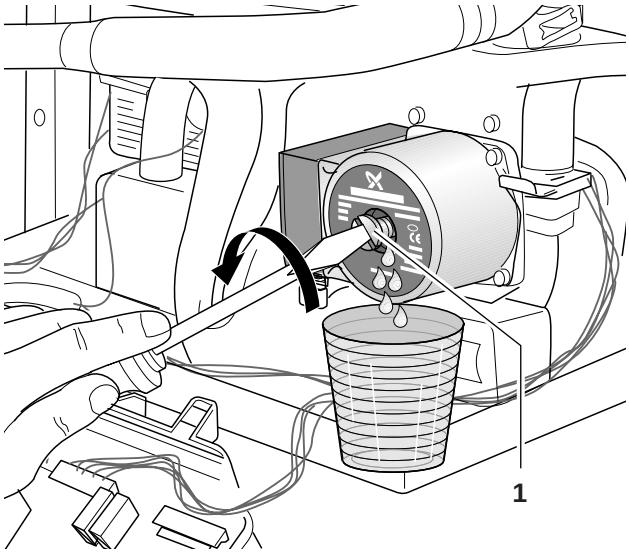

- Loosen by two turns the vent screw (item 1) on the front of the pump.

CAUTION!
Water will also squirt out!

box 58

- Vent the pump.

CAUTION!
Correct venting of the pump will help ensure that it runs for its specified service life.
The sliding bearing, which is located behind the vent screw, is lubricated with heating system water.

- Once the heating system has been completely purged of air, check the pressure at the analogue pressure gauge. If the pressure is lower than 1.0 bar, the boiler should be topped up as described above.
- Close the water tap.

In the case of system boilers:

- Close the filling loop of the boiler, see box 50, item 2.
- Remove the hose.
- Fit the sealing cap to the filling and draining cock.

In the case of combination boilers:

- Close the filling loop.
- Remove the hose.

- Fit casing, see box 51.
- Configure target adjustments using the “Settings” menu on the DBA control panel of the boiler, see box 61

box 59 Initial startup

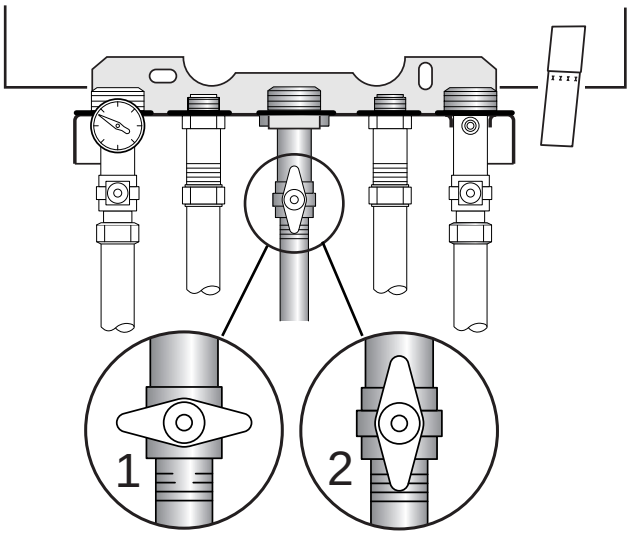

- Open the gas tap (item 2).

box 60

- Put the boiler into operation, see box 53, 54 or 55.

box 61

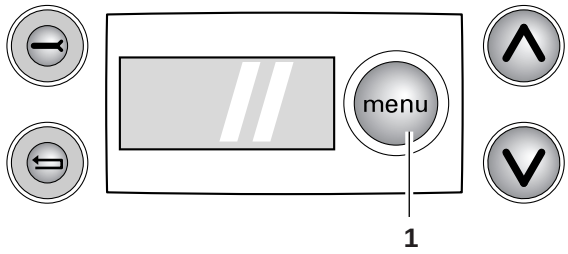

- Press the menu button (item 1) on the DBA control panel of the boiler.
- Configure the menu as required, see box 14.

box 62 Check/replace fuses (1)

DANGER OF FATAL ACCIDENT due to electric shock

- Take the boiler out of operation, see box 43, 44 or 47.

box 63

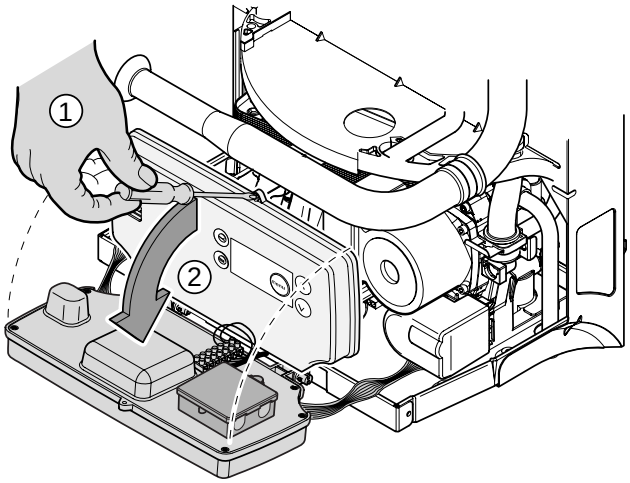

- Remove the casing from the boiler, see box 47.
- Loosen the cap screw on the DBA control panel (item 1).
- Tip the DBA control panel forwards (item 2).

box 64

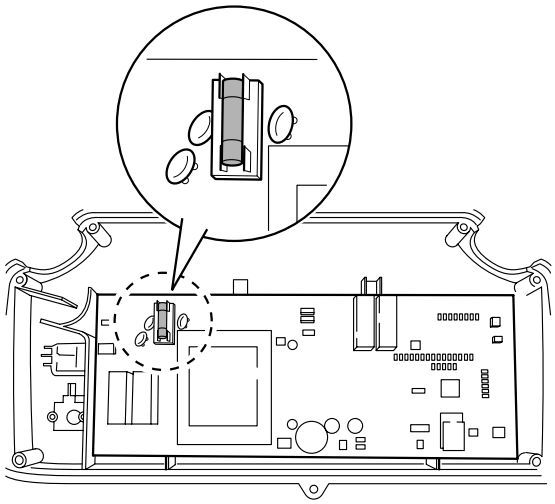

- Remove the rear section of the DBA control panel, see box 70.
- Remove the fuse from the fuse holder.
- Check the fuse with a multimeter. If the fuse possesses infinitely high electrical resistance, it is defective.
- Replace the defective fuse with a (new) 2.5 AT slow blow reserve fuse.

box 65

- Refit the DBA control panel, following the above procedure in reverse order.
- Refit the casing and place the boiler into operation, see box 51, 53, 54 or 55.

box 66 Check fan – activation 230V AC

DANGER OF FATAL ACCIDENT due to electric shock

CAUTION!
To prevent damage, do not insert the measuring electrodes of the multimeter too far into the holes of the plug-and-socket connection.

- Remove the casing and place the boiler out of operation, see box 47, 43 or 44.

box 67

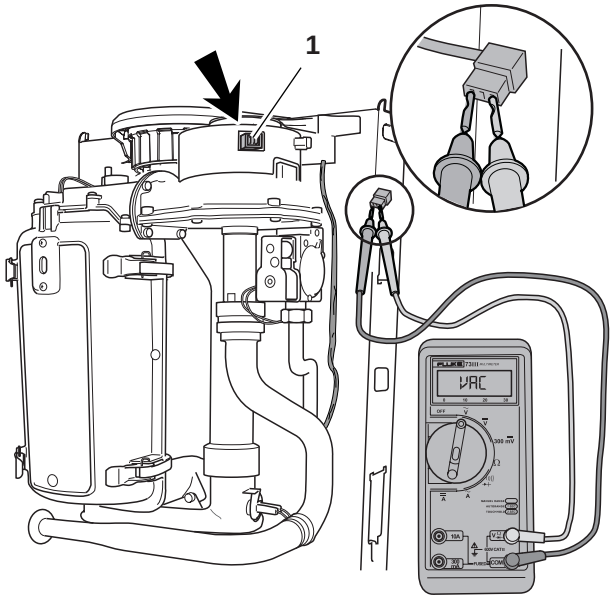

- Set the multimeter to VAC. Minimum value: 250 V AC.
- Disconnect the 230V AC plug (item 1) from the fan.
- Attach the multimeter to the two outer contacts (blue and brown) of the fan connection plug.
- Start system at full load, see box 54, 55 or 13.
- Check whether, with operating code (A) 0C active, there is a voltage of 230 V AC at the two outer contacts (blue and brown) of the plug.

box 68

- Take the electrical system of the boiler out of operation, see box 43 and 44.
- Insert the fan connection plug.
- Refit the casing and place the boiler into operation, see box 51, 53, 54 or 55.

box 69 Check fan – power supply cable (230 V AC)

DANGER OF FATAL ACCIDENT due to electric shock

CAUTION!
To prevent damage, do not insert the measuring electrodes of the multimeter too far into the holes of the plug-and-socket connection.

- Take the boiler out of service and tip the DBA control panel forwards, see box 43, 44, 47 or 63.

box 70

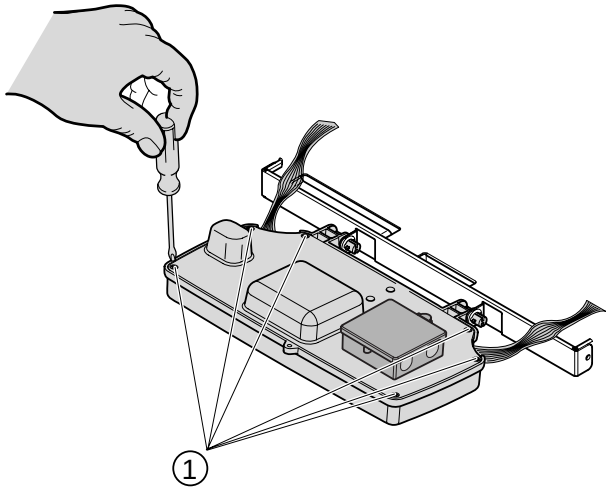

- Loosen the six screws and remove the rear section.

box 71

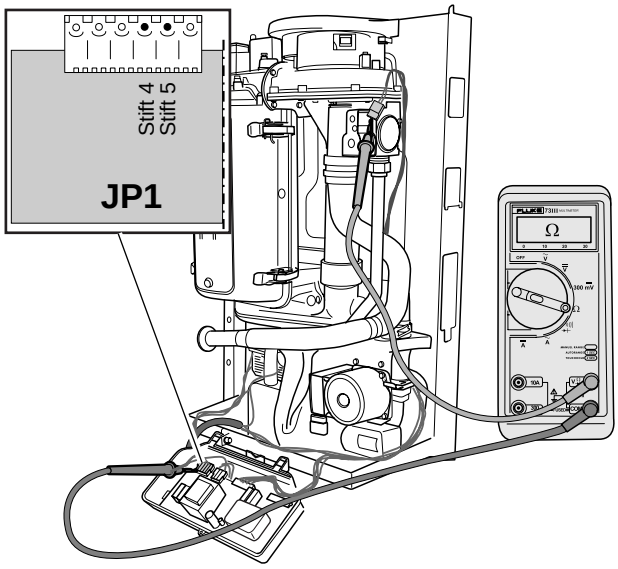

- Disconnect the 230V AC plug (item 1) from the fan.
- Set multimeter to “measure resistance”.
- Check the power supply cable of the fan for breaks. The electrical resistance measured at each individual wire must be approximately 0 Ω.
- Check the power supply cable of the fan for internal short circuits. The level of electrical resistance, measured between two wires chosen at random, must be infinitely high. See also box 287.

box 72

- Insert the fan connection plug.
- Refit the DBA control panel, following the above procedure in reverse order.
- Refit the casing and place the boiler into operation, see box 51, 53, 54 or 55.

box 73 Check fan – tacho cable

DANGER OF FATAL ACCIDENT
due to electric shock

CAUTION!
To prevent damage, do not insert the measuring electrodes of the multimeter too far into the holes of the plug-and-socket connection.

- Take the boiler out of service and tip the DBA control panel forwards, see box 43, 44 or 47 or 63.
- Loosen the six screws and remove the rear section, see box 70.

box 74

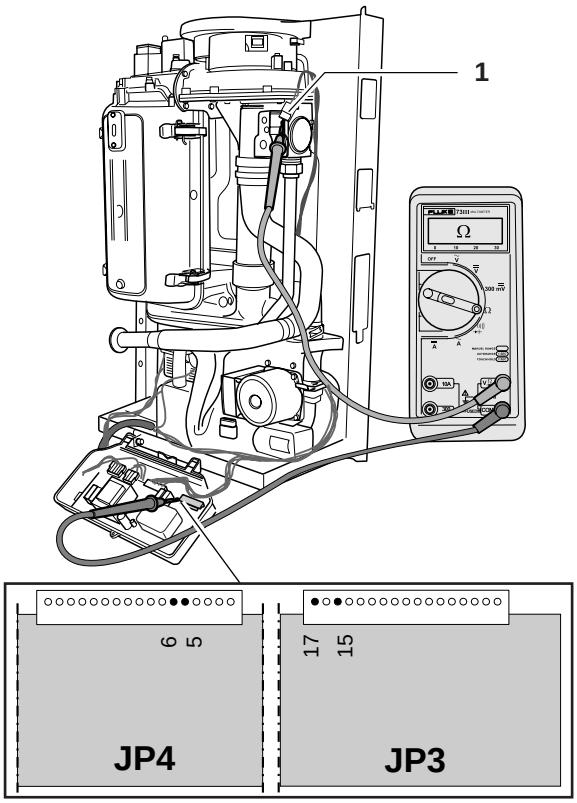

- Pull out the tacho cable plug (item 1).
- Set multimeter to “measure resistance”.
- Attach the multimeter.
- Check the tacho cable of the fan for breaks.
  The electrical resistance measured at each individual wire must be approximately 0 Ω.
- Check the tacho cable of the fan for internal short circuits.
  The level of electrical resistance, measured between two wires chosen at random, must be infinitely high.

box 75

- Connect the tacho cable plug.
- Refit the DBA control panel, following the above procedure in reverse order.
- Refit the casing and place the boiler into operation, see box 51, 53, 54 or 55.

box 76 Check fan and/or replace

DANGER OF FATAL ACCIDENT
due to electric shock

DANGER OF FATAL ACCIDENT
All work on gas pipework and gas-fitting components must be carried out by a company registered and authorised for this purpose.

NOTE:
Please observe the fitting instructions supplied with the fan.

- Take the boiler out of operation and close the gas tap, see box 43, 44, 46 or 47.

box 77

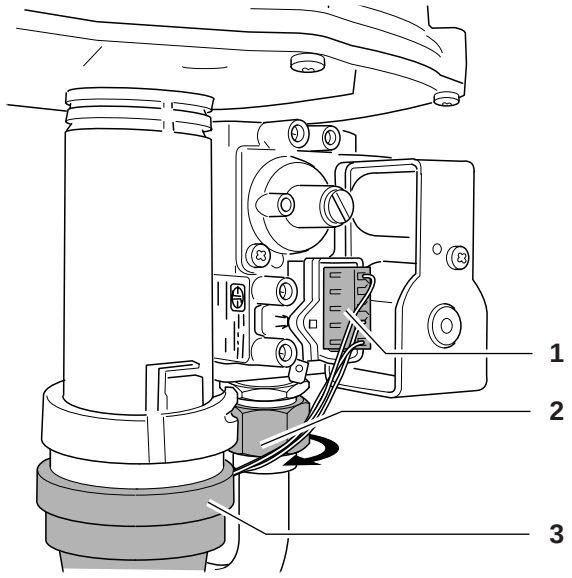

- Pull out the power supply plug of the gas valve (item 1).
- Loosen the union nut (item 2).
- Detach the air silencer tube (item 3).

box 78

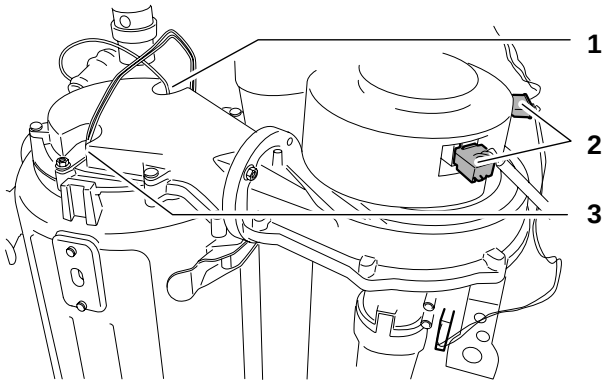

- Pull out both fan plugs (item 2).
- Pull out the glow ignitor plug (item 3).
- Pull out the ionisation electrode plug (item 1).

box 79

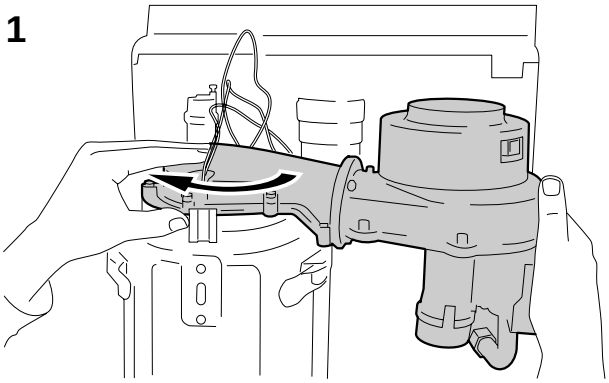

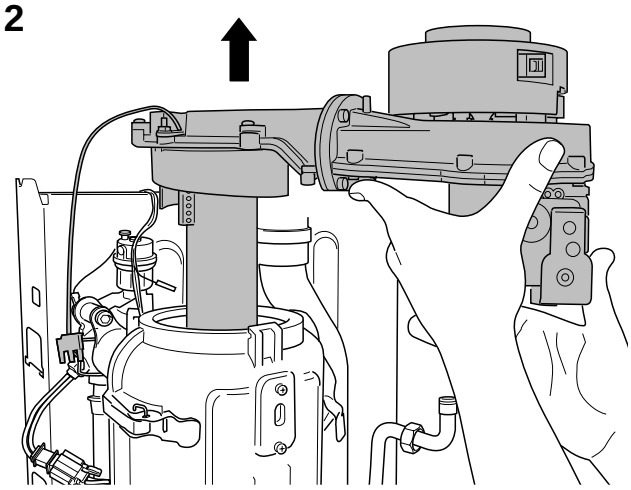

- Twist (drawing 1) the fan in the direction of the arrow to remove (drawing 2).
- Check to see if the fan is soiled or wet.
- Check to see if the fan impeller has come loose at the motor spindle.

box 80

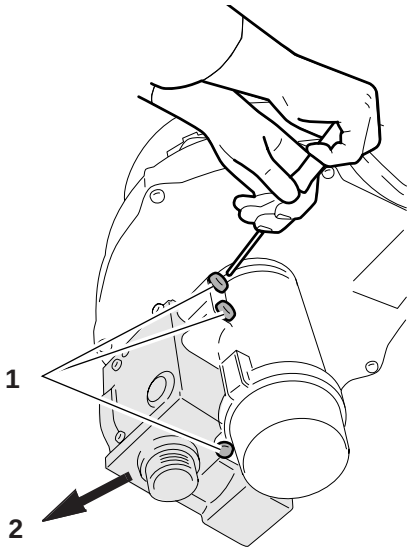

- Loosen the three screws (item 1) on the gas valve.
- Remove the gas valve (item 2).

box 81

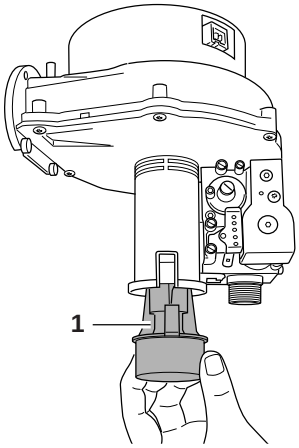

- Remove the Venturi (item 1).

box 82

- Fit the Venturi to the new fan.

box 83

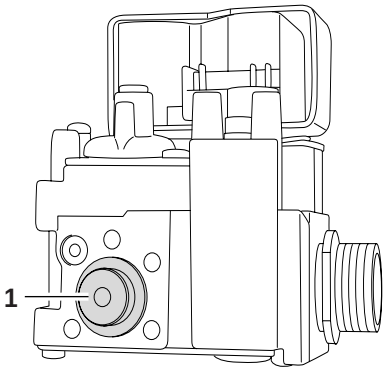

- Fit the gas valve to the new fan. When doing so, ensure that the gas injector (item 1) is correctly fitted.

box 84

- Fit the fan to the boiler. Remember to fit the new flat rubber sealing ring (supplied) when doing so.
- Fit the air silencer tube to the fan.
- Fit the gas supply pipe to the gas valve. Ensure when doing so that the flat rubber sealing ring is correctly fitted.
- Insert the power supply plug into the gas valve, then insert the power supply plug and tacho cable plug into the fan.
- Open the gas cock and place the electrical system of the boiler into operation, see box 59, 54 or 55.
- Carry out a gas-leak check. Check the tightness of all components that were loosened in the course of component removal. Use an authorised foam-type leak detection product for this purpose. If you detect a gas leak, refer to box 46, 43 or 44.
- Remedy the cause of the gas leak.
- Open the gas cock, place the electrical system of the boiler into operation and fit the casing, see box 59, 54, 55 or 51.

box 85 Check the non return valve

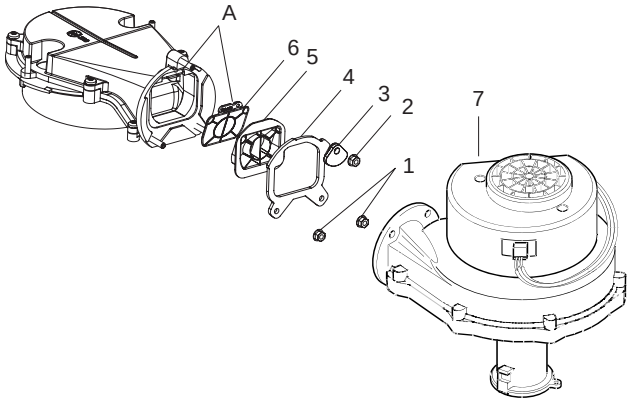

- Remove the fan, see box 76 to box 79.
- Check to see if the non return valve (item 5 and 6, if fitted) is soiled or defective.
- Loosen the upper nut (item 2).
- Loosen the two lower nuts (item 1).
- Turn the securing plate 180° counterclockwise (item 3).
- Remove the fan part (item 7).
- Bend the silicon seal (item 4).
- Remove the plastic valvehousing (item 5).
- Check the silicon valve (item 6) and replace when necessary.
- After checking, refit all components in reverse order. Make sure that the cam (item A) of the silicon valve is mounted in the correct manner (A).
- First tighten the upper nut (item 2), then tighten the lower two nuts (item 1).
- Refit all other components in reverse order, then put the boiler into service, see box 51, 54 or 55.

box 86 Check the Venturi

- Take the boiler out of operation, see box 43, 44 or 47.
- Remove the air intake duct, see box 77.
- Remove the Venturi, see box 81, item 1.

box 87

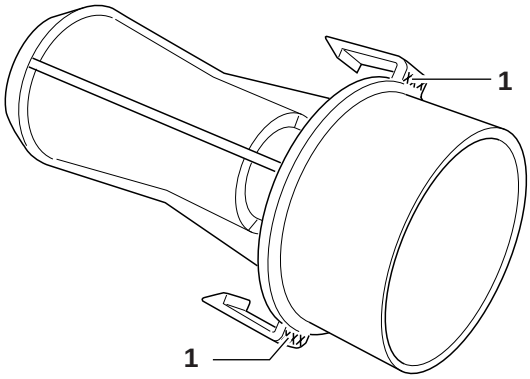

- Check the article number of the Venturi against those listed in the table in box 5.
- Check to ensure that the correct Venturi has been fitted. This is done by comparing the article numbers listed against the number on the Venturi (item 1), see box 5.
- Check the Venturi for soiling.

box 88

- Refit the Venturi and fan by following the above procedure in reverse order.
- Refit the air silencer tube.
- Refit the casing and place the boiler into operation, see box 51, 53, 54 or 55.

box 89 Check the pump – mechanical restrictions

- Remove casing, see box 47.
- Remove the vent screw on the front of the pump, see box 57.

CAUTION!
Note that water will squirt out when the vent screw is removed. Have a bucket and a supply of dry cloths to hand.

box 90

- Put the electrical system of the boiler into operation, see box 54 and 55.
- Check to see if the pump is running. The pump may become mechanically blocked if the heating system has been out of use for an extended period.
- Insert a screwdriver and attempt to make the pump turn. Use the screwdriver to turn the fan wheel in the direction of rotation shown on the identification plate of the pump.
- Refit the vent screw to the pump.
- Fit casing, see box 51.

box 91 Check the pump – activation

DANGER OF FATAL ACCIDENT due to electric shock

CAUTION!
To prevent damage, do not insert the measuring electrodes of the multimeter too far into the holes of the plug-and-socket connection.

CAUTION!
Close gas valve during pump test.

- Take the boiler out of operation, see box 43, 44 or 47.

box 92

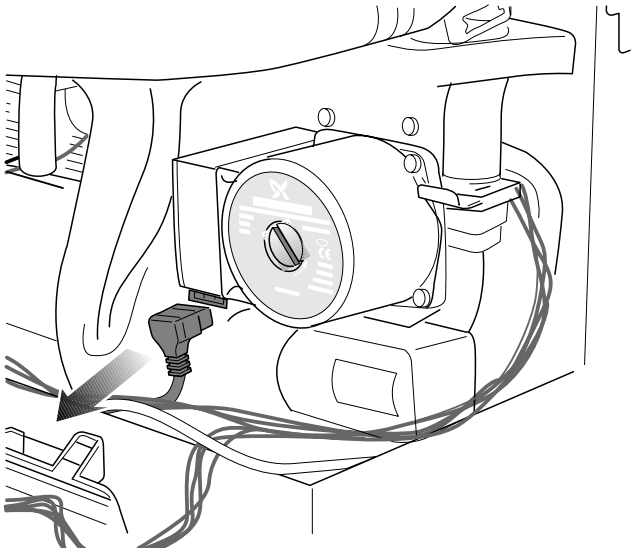

- Pull out the power supply plug of the pump.

box 93

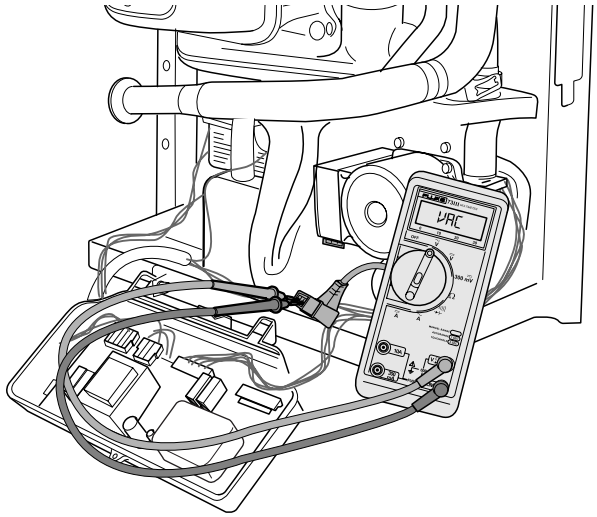

- Set the multimeter to “measure AC voltage”. Minimum measuring range: 250V AC.
- Put the boiler into operation, see box 54 and 55.
- Carry out a multimeter check to verify whether 230V AC is present at both outer contacts (L and N) of the power supply plug of the pump during locking fault code 2L .

box 94

- Insert the power supply plug of the pump.
- Fit casing, see box 51.

box 95 Check the pump – power supply cable

DANGER OF FATAL ACCIDENT due to electric shock

- Take the boiler out of serve and tip the DBA control panel forwards, see box 43, 44, 47 or 63.
- Loosen the six screws and remove the rear section, see box 70.
- Remove the power supply plug of the pump, see box 92.

box 96

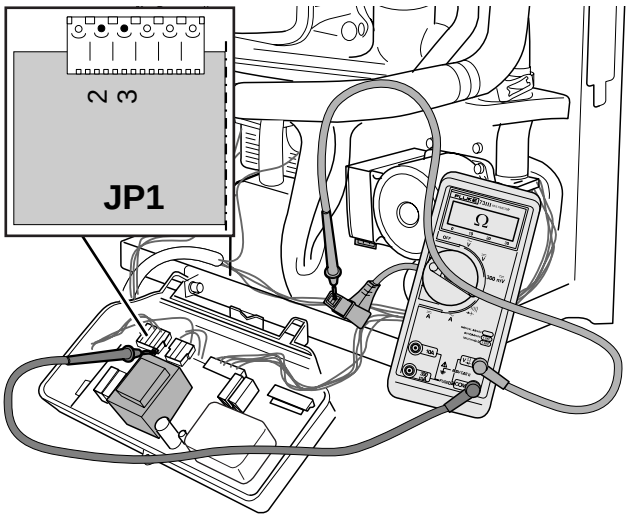

- Check the power supply cable of the pump for breaks. The electrical resistance measured at each individual wire must be approximately 0 Ω.
- Check the power supply cable of the pump for internal short circuits. The level of electrical resistance, measured between two wires chosen at random, must be infinitely high.
- Fit the power supply plug of the pump, fit the DBA control panel and place the boiler into operation, see box 53, 54 or 55.

box 97 Check the pump – soiling

- Take the boiler out of operation and drain the heating system, see box 43, 44, 47, 45, 49 or 50.

box 98

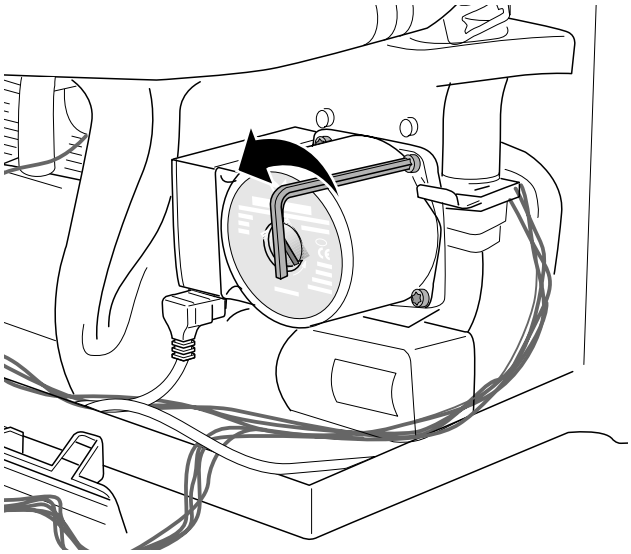

- Loosen the four Allen screws on the pump.
- Remove the top section of the pump.

box 99

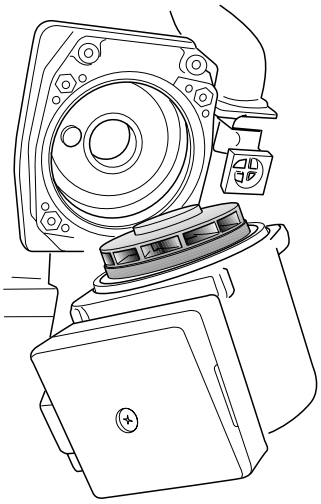

- Clean the pump impeller wheel.

box 100

- Refit the top section of the pump.
- Fill and vent the heating system, see box 52 to 58.
- Fit casing, see box 51.

box 101 Replace the pump

DANGER OF FATAL ACCIDENT due to electric shock

- Take the boiler out of operation and drain the heating system, see box 43, 44, 47, 45, 49 or 50.
- Remove the power supply plug of the pump, see box 92.

box 102

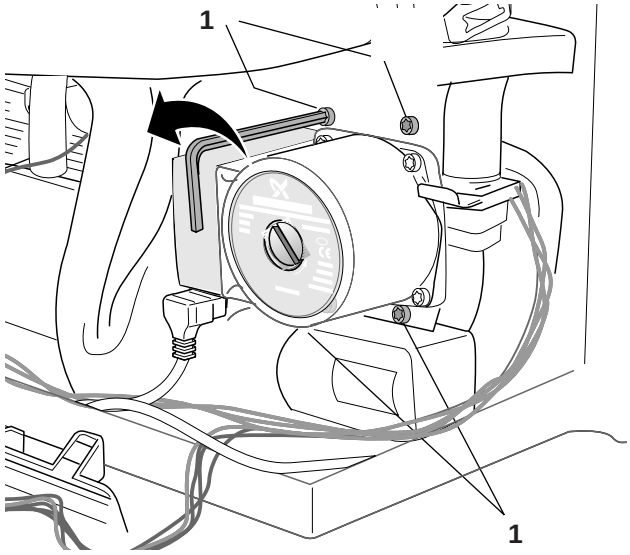

- Loosen the union nuts (item 1) at the top and side of the pump.
- Remove the pump.

box 103

CAUTION!
Fit new flat sealing rings when installing the new pump.

- Install the new pump.
- Insert the power supply plug of the pump, fill and vent the heating system of air and put the boiler into operation, see box 57 to 60.
- Fit casing, see box 51.

box 104 Check the flow, safety and DHW temp. sensors (applies to external cylinder only)

- Put the boiler into operation, see box 54 or 55.
- Open the hot water tap and wait for the boiler to start up, then gradually close the hot water tap to bring the CH flow temperature to over 80 °C.
- Take the boiler out of operation and remove the casing, see box 43, 44 or 47.

box 105

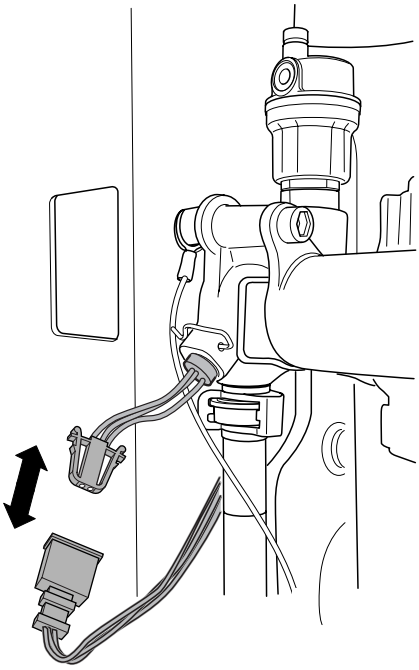

- Pull out the plug of the safety sensor.

box 106

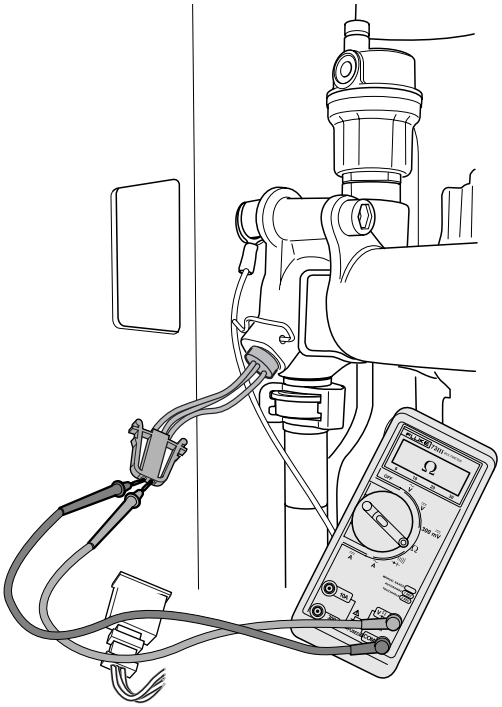

- Set multimeter to “measure resistance”.
- Measure the resistance of the safety sensor.

box 107

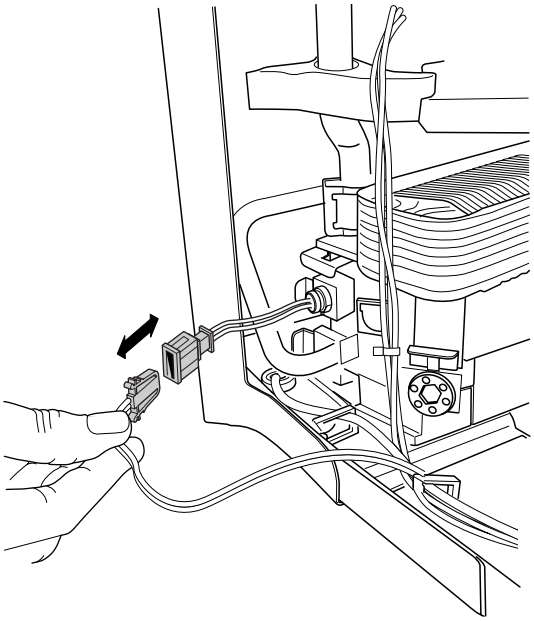

- Pull out the plug of the flow NTC sensor.

box 108

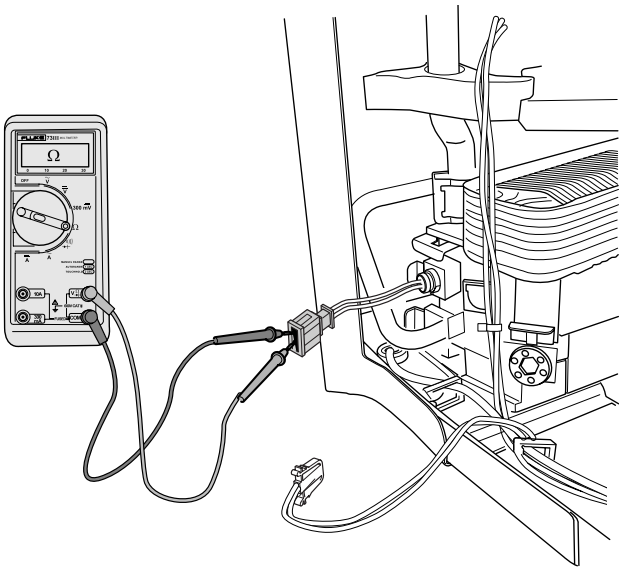

- Set multimeter to “measure resistance”.
- Measure the resistance of the flow NTC sensor.

box 109

- Measure the electrical resistance of the flow NTC sensor and safety sensor.
- Measure the electrical resistance of the flow NTC sensor and check the earth (ground) connection of the safety sensor. This must be infinitely high.
  The measured resistance of the flow NTC sensor is virtually identical to that of the safety sensor.

box 110

- Use a digital contact-type thermometer to measure the temperature in the vicinity of the corresponding sensor.
- Compare the resistance readings with the values listed in box 111.
- Replace the corresponding sensor if the reading fluctuates by more than 10% with respect to the reference value (e.g. infinitely high resistance in the event of a line break or resistance of 0 Ω in the case of a short circuit).
- Reinsert the plug.
- Refit the casing and place the boiler into operation, see box 51, 53, 54 or 55.

box 111

Resistance readings (approximate values) for the sensor

Temperature in °C	Resistance in Ω	Temperature in °C	Resistance in Ω
0	29,490		
5	23,462	55	3,271
10	18,787	60	2,760
15	15,136	65	2,339
20	12,268	70	1,990
25	10,000	75	1,700
30	8,197	80	1,458
35	6,754	85	1,255
40	5,594	90	1,084
45	4,656	95	940
50	3,893	100	817

box 112 Check the flow, safety and DHW temperature sensors – cables

DANGER OF FATAL ACCIDENT due to electric shock

CAUTION!
To prevent damage, do not insert the measuring electrodes of the multimeter too far into the holes of the plug-and-socket connection.

- Take the boiler out of service and tip the DBA control panel forwards, see box 43, 44, 47 or 63.
- Loosen the six screws and remove the rear section, see box 70.
- Pull out the plugs of the flow NTC sensor and safety sensor, see box 105.

box 113

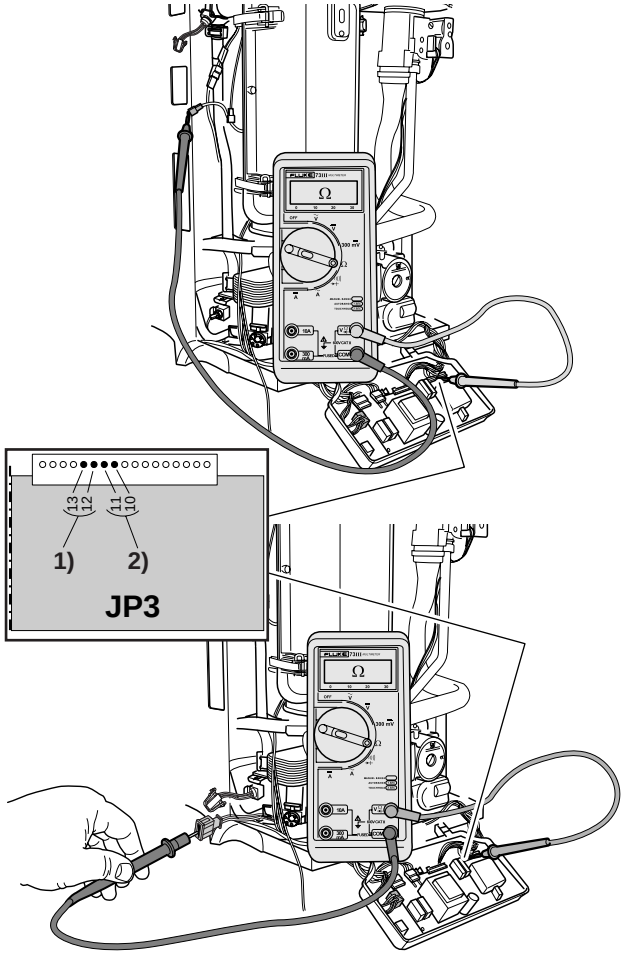

Key to terms:
1) Flow NTC sensor
2) Safety sensor

- Set multimeter to “measure resistance”.
- Check the cables of the flow NTC sensor and safety sensor for breaks. The electrical resistance measured at each individual wire must be approximately 0 Ω.
- Check the cables of the flow NTC sensor and safety sensor for internal short circuits. The level of electrical resistance, measured between two wires, must be infinitely high.
- Measure the electrical resistance of the flow NTC sensor and check the earth (ground) connection of the safety sensor. This must be infinitely high.

box 114

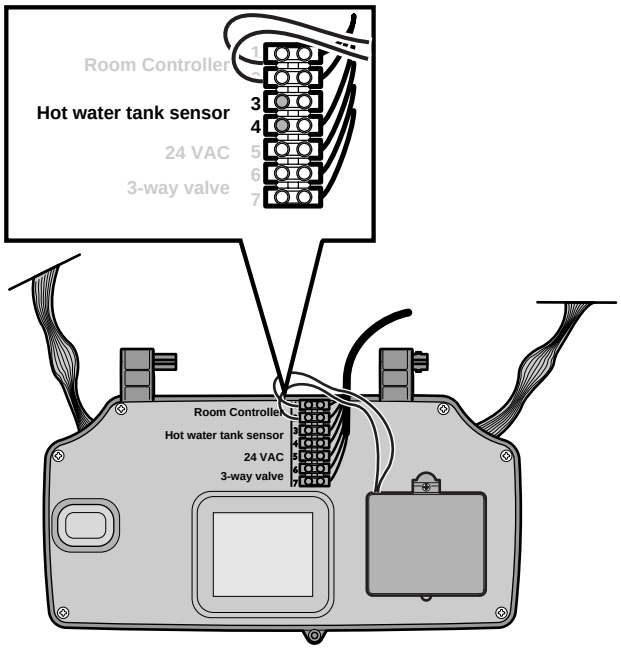

- Set multimeter to “measure resistance”.
- Detach the cables of the DHW temperature sensor (item 3 and 4) from the DBA control panel.
- Measure the resistance of the cable of the DHW temperature sensor and check it for short circuits and breaks. See box 112.
- Fit the cables of the DHW temperature sensor to the DBA control panel (item 3 and 4).

box 115

- Insert the cables of the corresponding DHW temperature or outside air-temperature sensor.
- Fit the DBA control panel and place the boiler into operation, see box 54, 55 or 51.

box 116 Replace the flow NTC sensor and/or safety sensor

- Take the boiler out of operation, drain the heating system and pull out the plug of the corresponding sensor, see box 43, 44, 47, 45, 47, 49 or 50.

box 117

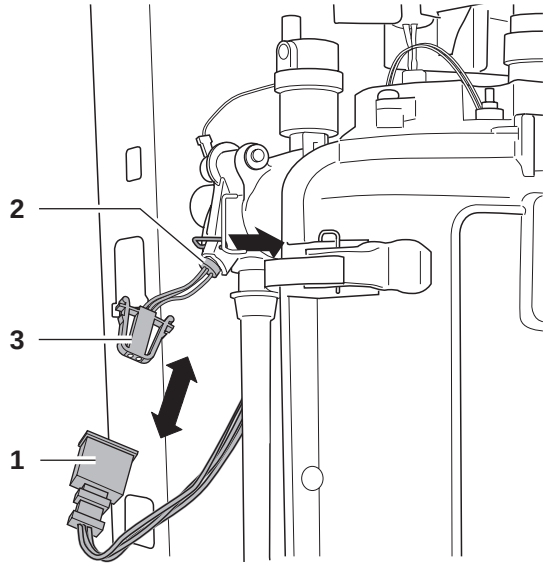

CAUTION!
Note that water will squirt out when the sensor is removed. Have a bucket and a supply of dry cloths to hand.

- Pull out the plug of the safety sensor (item 1).
- Detach the stop spring of the safety sensor by pulling in the direction of the arrow (item 2).
- Remove the safety sensor (item 3).

box 118

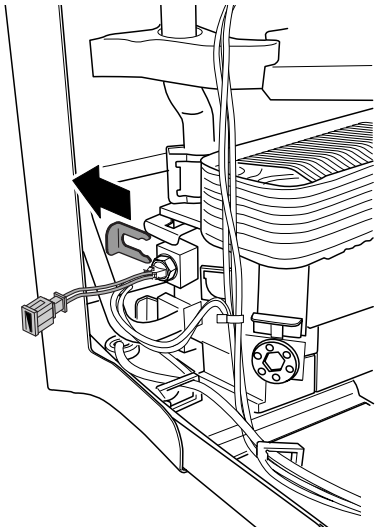

CAUTION!
Note that water will squirt out when the sensor is removed. Have a bucket and a supply of dry cloths to hand.

- Detach the stop spring of the flow NTC sensor by pulling in the direction of the arrow.
- Remove the flow NTC sensor.

box 119

- Fit the corresponding new sensor.
- Fill the heating system, vent it of air and place the boiler into operation, see box 52 to 58.

spares & parts online

box 120 Check the flue-gas STL

- Take the boiler out of operation, see box 43, 44 or 47.

box 121

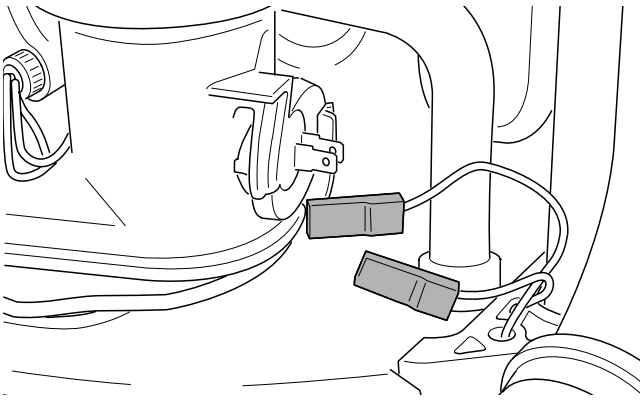

- Remove both plugs of the flue-gas STL.

box 122

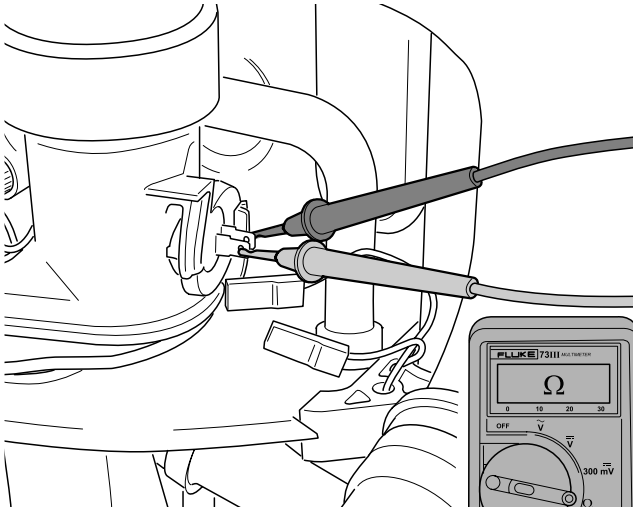

- Set multimeter to “measure resistance”.
- Check the electrical resistance of the flue-gas STL.

box 123

- Check the temperature of the flue gas at the test point on the flue pipe.
- Compare the flue-gas temperature reading with the measured electrical resistance, see box 124.

box 124

Flue-gas STL		
Temperature	**Status**	**Resistance in Ω**
≤ 105 °C	closed	0
>105 °C	open	infinitely high

box 125

- Insert both plugs at the flue-gas STL and fit the cover on the test point of the flue pipe. Put the boiler into operation, see box 51, 54 or 55.

box 126 Check the flue-gas STL - cable

DANGER OF FATAL ACCIDENT
due to electric shock

- Take the boiler out of service and tip the DBA control panel forwards, see box 43, 44, 47 or 63.
- Loosen the six screws and remove the rear section, see box 70.
- Remove both plugs of the flue-gas STL, see box 121.

box 127

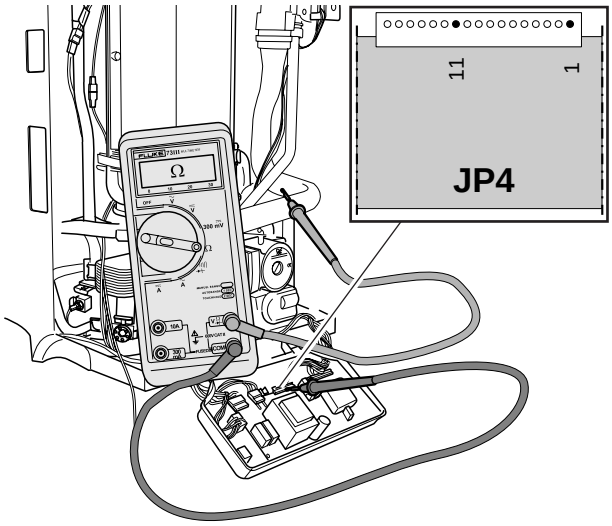

- Set multimeter to “measure resistance”.
- Check the cables of the flue-gas STL for breaks.
- The electrical resistance measured at each individual wire must be approximately 0 Ω.
- Check the cables of the flue-gas STL for internal short circuits. The level of electrical resistance, measured between two wires chosen at random, must be infinitely high.

box 128

- Insert both plugs at the flue-gas STL, fit the DBA control panel, attach the casing and place the boiler into operation, see box 51, 54 or 55.

box 129 Replace the flue-gas STL

- Take the boiler out of operation, see box 43, 44 or 47.
- Remove both plugs of the flue-gas STL, see box 121.
- Twist the flue-gas STL anticlockwise to remove.
- Fit the new flue-gas STL. Use a new seal when doing so.
- Insert both plugs at the flue-gas STL and place the boiler into operation, see box 51, 54 or 55.

box 130 Check the glow ignitor – activation

DANGER OF FATAL ACCIDENT
due to electric shock

- Take the boiler out of operation, see box 43, 44 or 47.

box 131

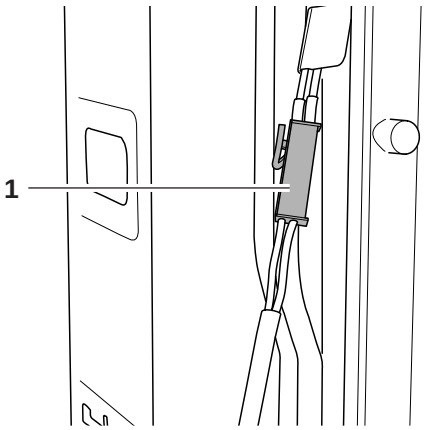

- Pull out the plug of the glow ignitor (item 1).

box 132

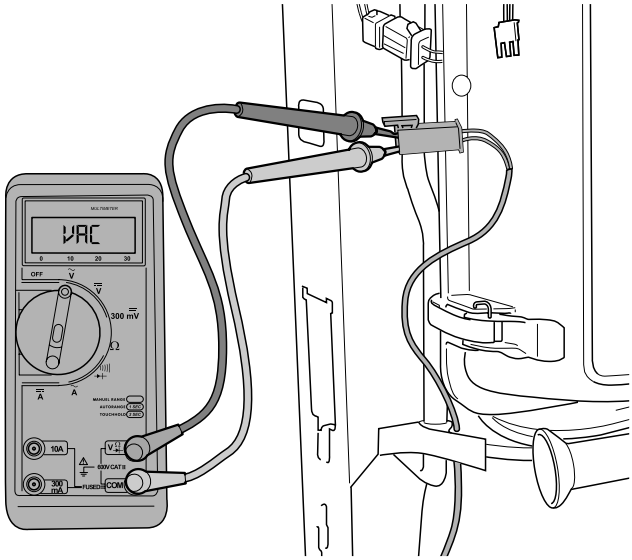

- Set the multimeter to “measure AC voltage”. Minimum measuring range: 230V AC.
- Put the boiler into partial-load or full-load operation, see box 13.
- Check to see whether, with the operating code (A) 0C 110 - 230 V AC is measured at the plug.

box 133

- Take the boiler out of operation, see box 43.
- Connect the plug of the glow ignitor.
- Put the boiler into operation, see box 54, 55 or 51.

box 134 Check the glow ignitor – resistance

DANGER OF FATAL ACCIDENT
due to electric shock

- Take the boiler out of operation, see box 43, 44 or 47.
- Remove the plug of the glow ignitor, see box 131.

box 135

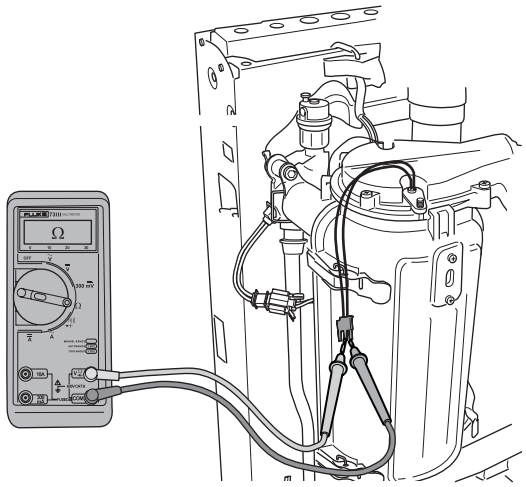

- Set multimeter to “measure resistance”.
- Check to see if the electrical resistance of the glow ignitor lies between 50 and 300 Ω.

box 136

- Connect the plug of the glow ignitor.
- Fit the casing and place the boiler into operation, see box 51, 54 or 55.

box 137 Check the glow ignitor – power supply cable

DANGER OF FATAL ACCIDENT
due to electric shock

CAUTION!
To prevent damage, do not insert the measuring electrodes of the multimeter too far into the holes of the plug-and-socket connection.

- Take the boiler out of serve and tip the DBA control panel forwards, see box 43, 44, 47 or 63.
- Loosen the six screws and remove the rear section, see box 70.
- Remove the plug of the glow ignitor, see box 131.

box 138

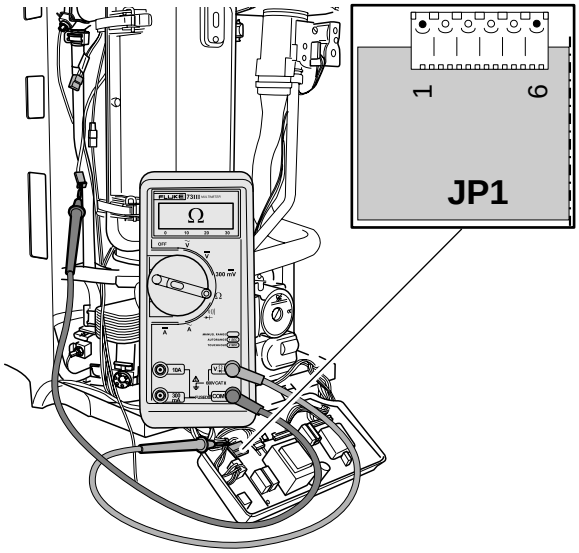

- Set multimeter to “measure resistance”.
- Check the mains cable of the glow ignitor for breaks. The electrical resistance measured at each individual wire must be approximately 0 Ω.
- Check the mains cable of the glow ignitor for internal short circuits. The level of electrical resistance, measured between any two wires, must be infinitely high.

box 139

- Connect the plug of the glow ignitor.
- Fit the DBA control panel and place the boiler into operation, see box 51, 54 or 55.

box 140 Replace the glow ignitor

DANGER OF FATAL ACCIDENT due to electric shock

- Take the boiler out of operation, see box 43, 44 or 47.
- Remove the plug of the glow ignitor, see box 131.

box 141

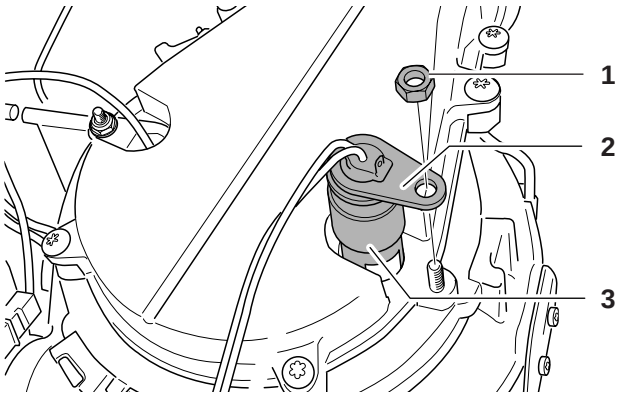

- Loosen the fixing nut of the glow ignitor (item 1).
- Remove the mounting plate (item 2).
- Detach the glow ignitor (item 3).

box 142

CAUTION!
The filament of the glow ignitor consists of sintered material and is highly breakable.

- Fit a new glow ignitor.
- Connect the plug of the glow ignitor.
- Put the boiler into operation, see box 51, 54 or 55.

box 143 Measure the ionisation current

- Take the boiler out of operation, see box 43, 44 or 47.

box 144

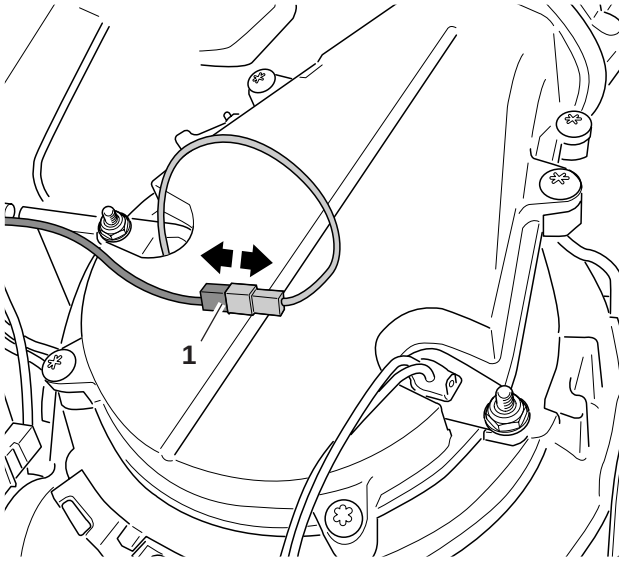

- Pull out the ionisation electrode plug (item 1).

box 145

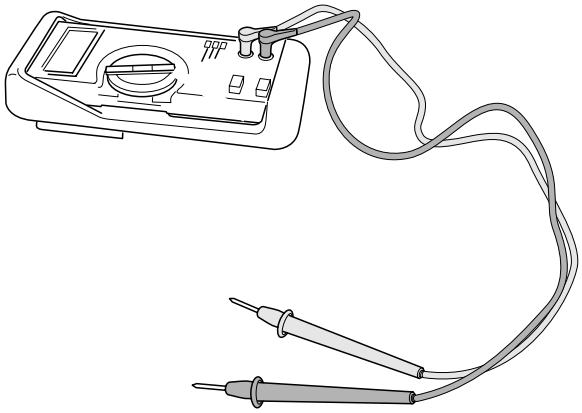

- Use a multimeter that is specially designed to measure the ionisation current.

box 146

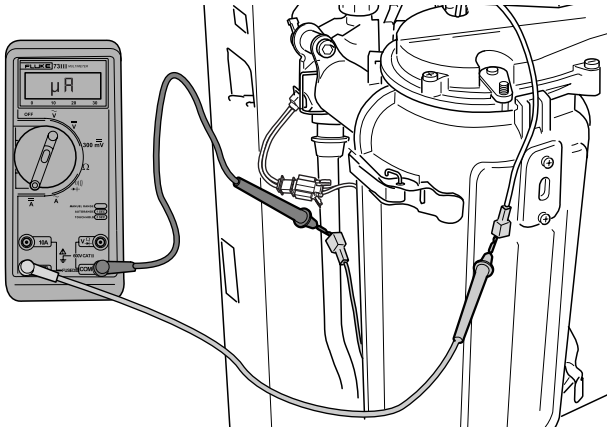

- Set the multimeter to “measure direct current”. Measuring range: Microamperes [µA].
- Connect the multimeter in series the ionisation circuit.
- Put the boiler into service mode, see box 54, 55 or 13.
- Check to see if the ionisation current, during service mode, operating code Ⓐ Lo , > 5 µA (micro amperes) and, with operating code Ⓐ Hi , > 25 µA.
  The value is 0 (zero), or between 1.3 and 50 µA.

box 147

- Take the boiler out of operation, see box 43 or 44.
- Detach the multimeter.
- Connect the plug of the ionisation electrode.
- Turn the operating switch on the boiler to position “**0**”, see box 55.
- Put the boiler into operation, see box 51, 54 or 55.

box 148 Check the ionisation electrode – short circuits

- Take the boiler out of operation, see box 43, 44 or 47.
- Loosen the plug-in connection of the ionisation electrode, see box 144.

box 149

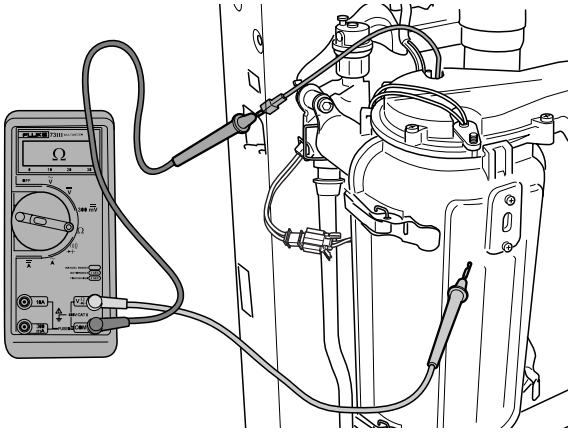

- Set multimeter to “measure resistance”.
- Take a reading at the electrode to check whether there is a possible short circuit between the ionisation electrode and earth (ground). The electrical resistance between the ionisation electrode and earth (ground) must be infinitely high.

box 150

- Connect the plug of the ionisation electrode.
- Put the boiler into operation, see box 51, 54 or 55.

box 151 Check the ionisation electrode – cable

DANGER OF FATAL ACCIDENT due to electric shock

- Take the boiler out of service and tip the DBA control panel forwards, see box 43, 44, 47 or 63.
- Loosen the six screws and remove the rear section, see box 70.
- Remove the plug of the ionisation electrode, see box 144.

box 152

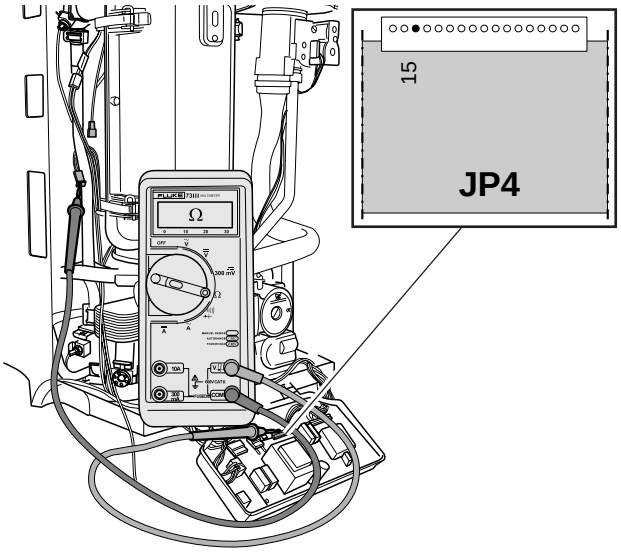

- Set the multimeter to “measure resistance”.
- Take a reading at the ionisation electrode to check whether there is a possible break in the cable of the electrode. The electrical resistance of the cable must be approximately 0 Ω.

box 153

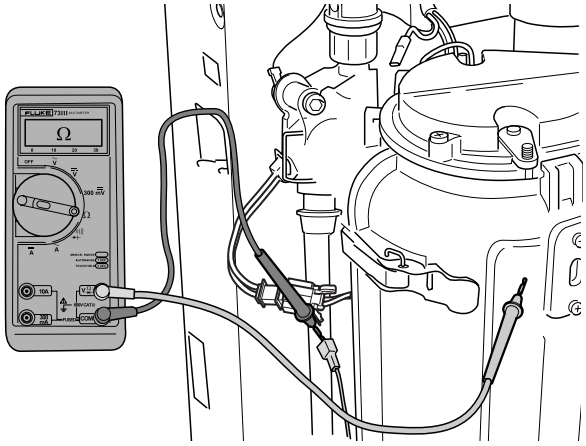

- Take an earth (ground) reading check whether there is a possible short circuit between the cable of the ionisation electrode and earth (ground). The electrical resistance between the ionisation electrode cable and earth (ground) must be infinitely high.

box 154

- Connect the plug of the ionisation electrode.
- Refit the DBA control panel, by following the above procedure in reverse order, and place the boiler into operation, see box 51, 54 or 55.

box 155 Check and replace the ionisation electrode

- Take the boiler out of operation, see box 43, 44 or 47.
- Remove the plug of the ionisation electrode, see box 144.

box 156

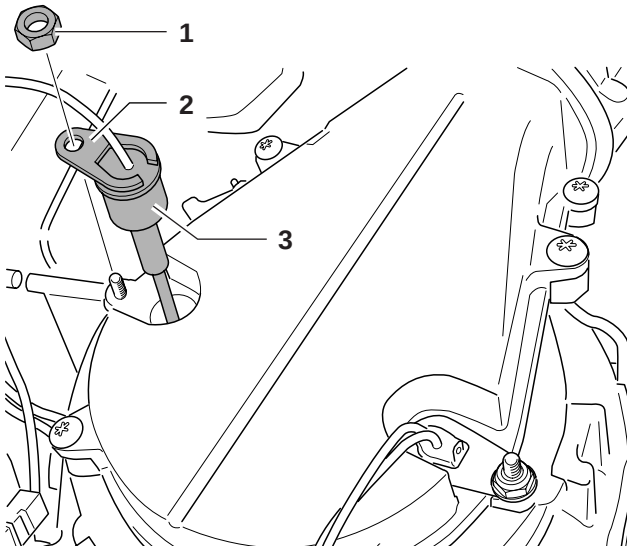

- Loosen the fixing nut on the ionisation electrode (item 1).
- Remove the mounting plate (item 2).
- Detach the ionisation electrode (item 3).

box 157

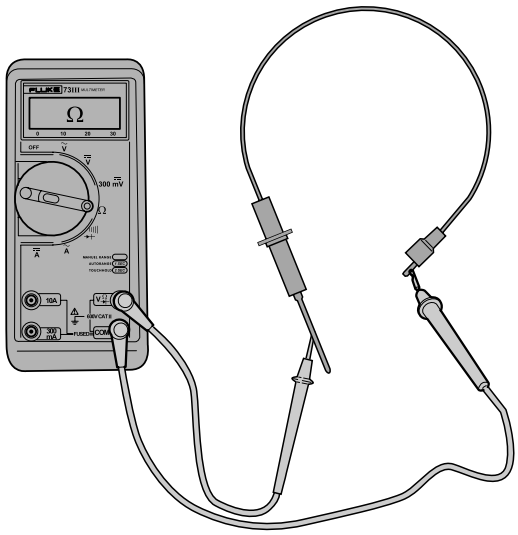

- Set multimeter to “measure resistance”.
- Take a reading at the ionisation electrode to check whether there is a possible break in the electrode cable. The electrical resistance of the ionisation electrode cable must be approximately 0 Ω.

box 158

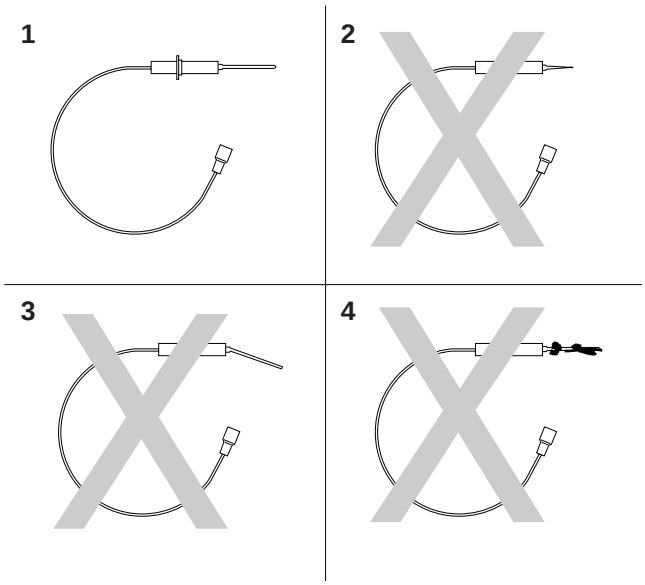

- Check the ionisation electrode for signs of wear (item 2), damage (item 3) or soiling (item 4).

box 159

- Replace the ionisation electrode if required.
- Fit the ionisation electrode.
- Connect the plug of the ionisation electrode.
- Put the boiler into operation, see box 51, 54 or 55.

box 160 Check the ionisation circuit – earth (ground) lead

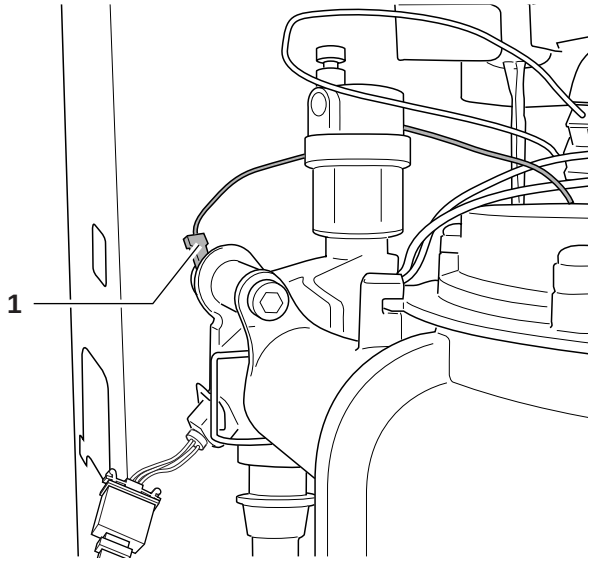

- Check to ensure that the earth (ground) lead of the ionisation circuit (item 1) has been correctly fitted.

box 161 Check the gas valve – power supply plug

- Take the boiler out of operation, see box 43, 44 or 47.

box 162

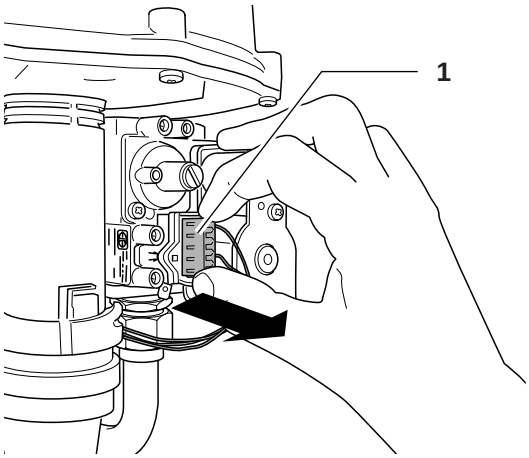

- Check to ensure that the power supply plug (item 1) has been inserted correctly into the gas valve.

box 163

- Put the boiler into operation, see box 51, 54 or 55.

box 164 Check the gas valve – activation

- Take the boiler out of operation, see box 43, 44 or 47.

box 165

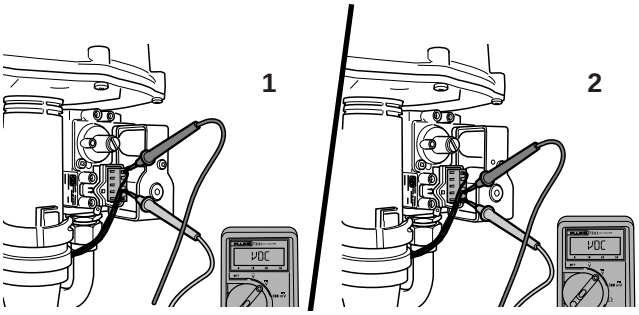

- Run the boiler at full load, see box 54, 55 and box 13, step 14.
- Set the multimeter to “measure DC voltage”. Minimum measuring range: 40V DC.
- Check to see if the gas valve has been activated. During operating code (A) [0L], or somewhat later, 20 – 24V DC must be detectable at both the centre and upper contacts (item 1 and 2).

box 166

- Put the boiler into operation, see box 51, 54 or 55.

box 167 Check gas valve – electrical resistance of power supply cable

- Take the boiler out of operation and remove the DBA control panel, see box 43, 44, 47, 63 or 70.

box 168

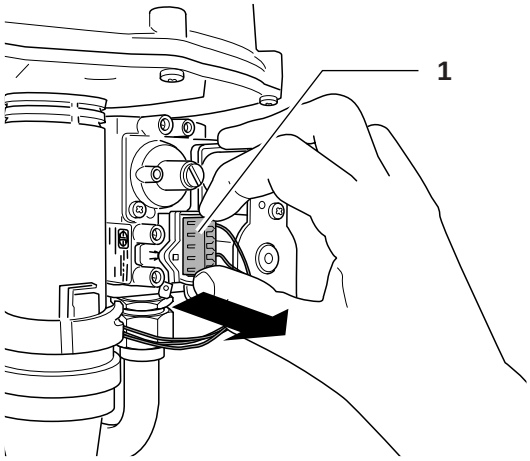

- Remove the plug from the gas valve (item 1).

box 169

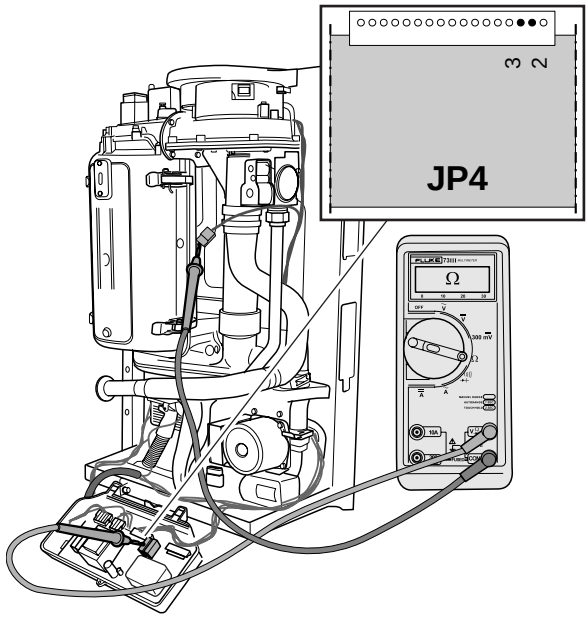

- Set multimeter to “measure resistance”.
- Check the power supply cable of the gas valve for breaks. The electrical resistance measured at each individual wire must be approximately 0 Ω.
- Check the power supply cable of the gas valve for internal short circuits. The level of electrical resistance, measured between two wires, must be infinitely high.

box 170

- Insert the gas valve plug.
- Fit the DBA control panel and place the boiler into operation, see box 51, 54 or 55.

box 171 Check the gas valve – internal electrical resistance

- Take the boiler out of operation, see box 43, 44 or 47.
- Remove the power supply plug of the gas valve, see box 168.

box 172

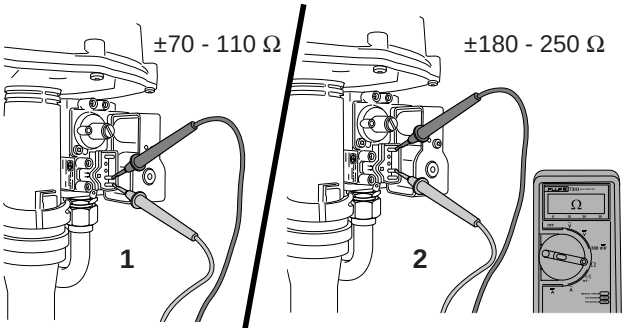

- Set multimeter to “measure resistance”.
- Take a reading at the coils to check the internal electrical resistance of the two gas valve coils. The electrical resistance between the middle and lower contact must be approx. 70 – 110 Ω (item 1). The electrical resistance between the middle and upper contact must be approx. 180 – 250 Ω (item 2).

box 173

- Fit the power supply plug to the gas valve.
- Put the boiler into operation, see box 51, 54 or 55.

box 174 Replace the gas valve

DANGER OF FATAL ACCIDENT!
All work on gas pipework and gas-fitting components must be carried out by a company registered and authorised for this purpose.

- Take the boiler out of operation and close the gas tap, see box 43, 44, 46 or 47.
- Remove the fan, see box 77, 78, 79 or 80.

box 175

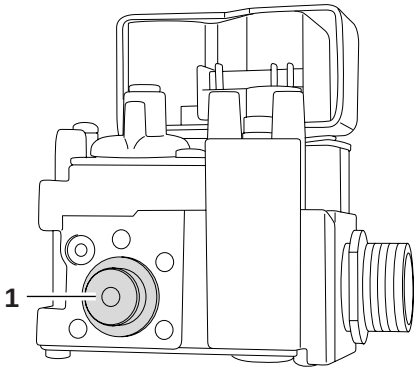

- Pull the gas injector (item 1) out of the gas valve.

box 176

- Fit the gas injector to the new gas valve.
- Fit the new gas valve to the fan.
- Fit the fan to the boiler, insert the air silencer tube into the fan, fit the gas supply pipe to the gas valve and insert the plugs into the fan and gas valve.
- Fit the air silencer tube to the fan.

CAUTION!
When attaching the gas supply pipe to the gas valve, ensure that the flat rubber seal is fitted correctly between the gas supply pipe and gas valve.

- Fit the gas supply pipe to the gas valve.
- Insert the power supply plug into the gas valve, then insert the power supply plug and tacho cable plug into the fan.
- Open the gas cock and place the boiler into full-load operation, see box 59, 54, 55 or 13.
- Carry out a gas-leak check. Check the tightness of all components that were loosened during removal of the gas valve. Use an authorised foam-type leak detection product for this purpose.
- Remedy the cause of the gas leak.
- Put the boiler into operation, see box 51, 54 or 55.

box 177 Check the ON/OFF or modulating control function

- Take the boiler out of service and tip the DBA control panel forwards, see box 43, 44 or 47. or 63.
- Loosen the six screws and remove the rear section, see box 70.

box 178

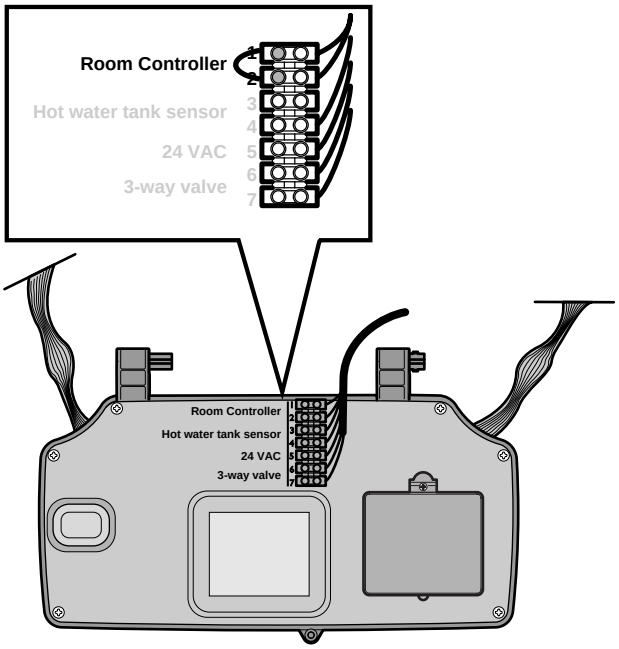

- Bridge the two contacts, terminal 1 and 2.

box 179

- Put the boiler into full-load operation, see box 54, 55 or 61. If the boiler goes into heating mode within approx. 3 minutes [-H], the cause of the fault lies outside the boiler.
- Take the boiler out of operation, see box 43 or 44.
- Remove the bridge connection.
- Connect the ON/OFF or modulating control element to the boiler.
- Put the boiler into operation, see box 51, 54 or 55.

box 180 Adjust the output flow rate (applies to combination boilers only)

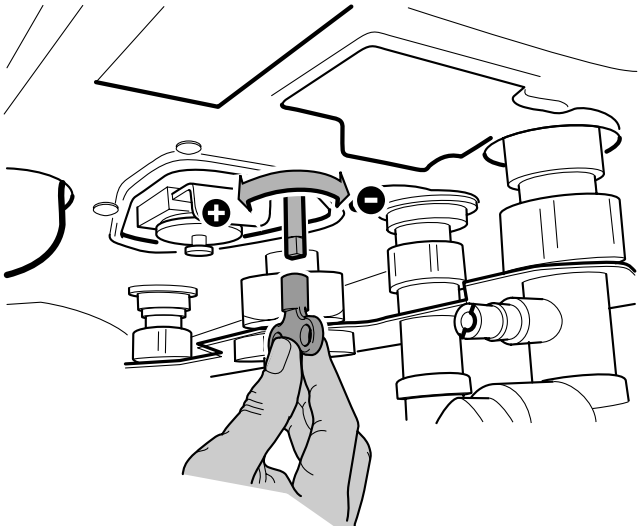

CAUTION!
As the water pressure and pipework resistance in the plumbing system can vary widely with each situation, it is important to adjust correctly the DHW flow rate at the boiler. Take a DHW flow rate reading, see box 12.

Adjust the DHW flow rate at the flow regulator for hot water. To check the DHW flow rate press and hold the down arrow and read off the display in ltrs/m.
– To increase the DHW flow rate: turn the flow regulator in direction “+”.
– To reduce the DHW flow rate: turn the flow regulator in direction “–”.

- Adjust the flow rate of hot water at one of taps where the user is likely to require hot water at an ideal temperature. Factory default setting: see factory settings in the installation instruction. This assumes a cold water input temperature of 10 °C.

box 181 Check the internal 3-way valve – movement of the servomotor

- Take the boiler out of operation, see box 43, 44 or 47.

box 182

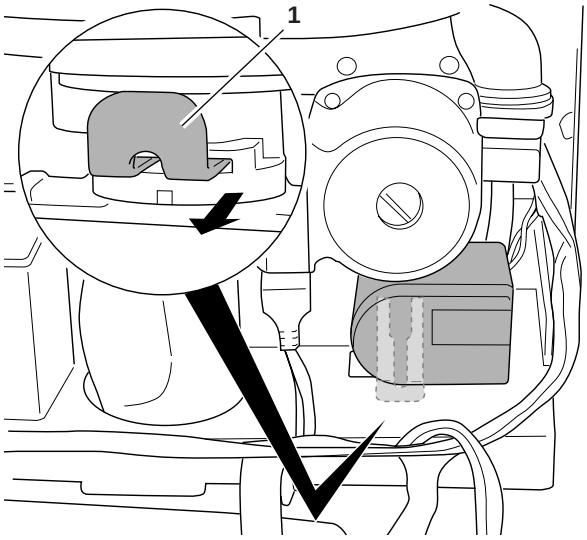

DANGER OF DAMAGE TO THE SYSTEM!
Before removing the servomotor, check to see if the 3-way valve is in its "heating mode" position, and wait for the boiler display code [0H] to appear. This prevents sudden pressure surges occurring in the heating circuit while the removal operation is taking place, and the resultant accidental opening of the pressure relief valve.

- Remove the stop spring (item 1).
- Remove the servomotor.

box 183

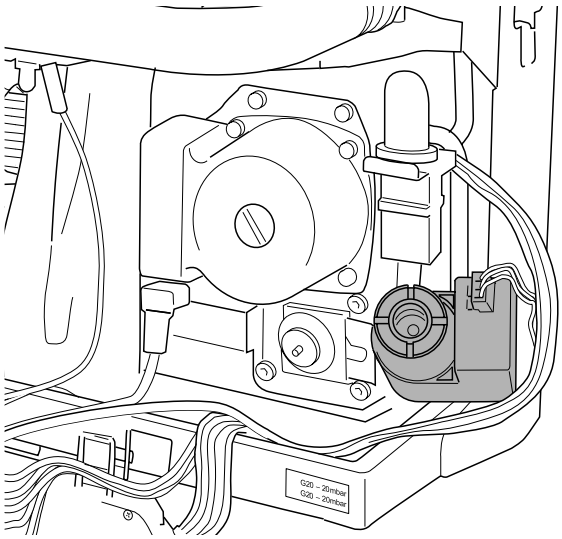

- Put the boiler into operation, see box 54 and 55.
- Use the "Settings" menu on the boiler DBA control panel to adjust the temperature to 60 °C, see box 14 or 18.
- Open a hot water tap.
- Check to see if the servomotor of the internal 3-way valve, during operating code [0C], rotates through a full revolution.
- Close the hot water tap.
- Check to see if the servomotor runs back again.

box 184

- Fit the servomotor to the 3-way valve.
- Insert the stop spring.
- Adjust the DBA control panel, see box 61.
- Fit casing, see box 51.

box 185 Check the internal 3-way valve – activation

CAUTION!
To prevent damage, do not insert the measuring electrodes of the multimeter too far into the holes of the plug-and-socket connection.

- Take the boiler out of operation, see box 43, 44 or 47.

box 186

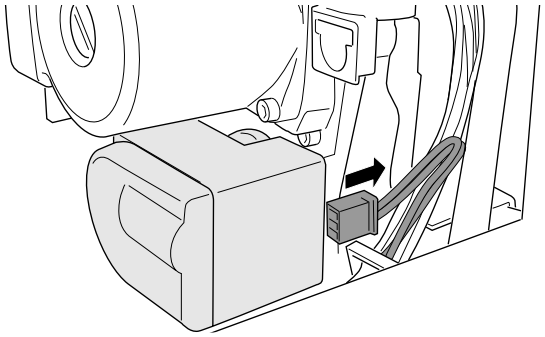

- Pull out the power supply plug of the servomotor.

box 187

- Put the boiler into operation, see box 54 and 55.

box 188

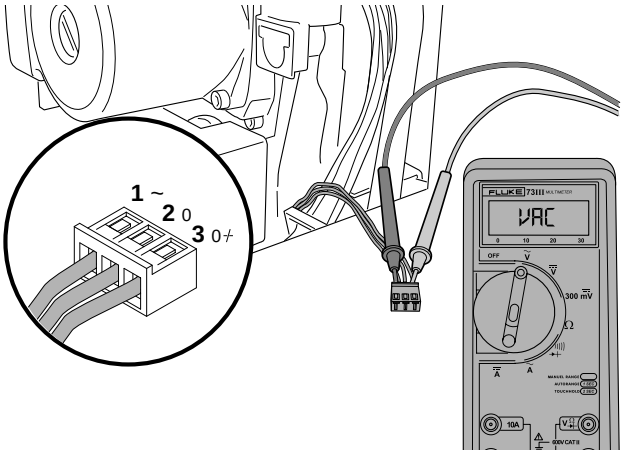

- Set the multimeter to “measure AC voltage”. Minimum measuring range: 40V AC.
- Use the "Settings" menu on the boiler DBA control panel to adjust the temperature to 60 °C, see box 14 or 18.
- Open a hot water tap.
- Check to see if, during operating code (A) 0C at plug-in contacts “1” and “3”, 24 V AC is detected between plug-in contacts “1” and “3” .
- Close the hot water tap.
- Check to see if, during operating code (A) 0H, 24 V AC is detected at plug-in contacts “1” and “2” .

box 189

- Insert the power supply plug of the 3-way valve.
- Put the boiler into operation, see box 51 or 61.

box 190 Internal 3-way valve – replace the servomotor

- Take the boiler out of operation, see box 43, 44 or 47.
- Remove the power supply plug of the servomotor, see box 186.
- Remove the servomotor, see box 182.
- Fit the new servomotor by following the above procedure in reverse order.
- Put the boiler into operation, see box 51, 54 or 55.

box 191 Check the internal 3-way valve – power supply cable

DANGER OF FATAL ACCIDENT due to electric shock

CAUTION!
To prevent damage, do not insert the measuring electrodes of the multimeter too far into the holes of the plug-and-socket connection.

- Take the boiler out of operation and remove the DBA control panel, see box 43, 44, 47, 63 or 70.
- Remove the power supply plug of the servomotor of the 3-way valve, see box 186.

box 192

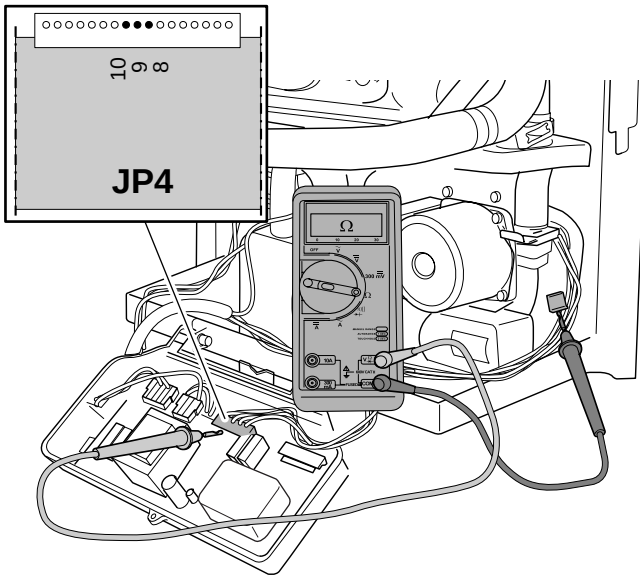

- Set multimeter to “measure resistance”.
- Check the power supply cable of the 3-way valve for breaks. The electrical resistance measured at each individual wire must be approximately 0 Ω.

box 193

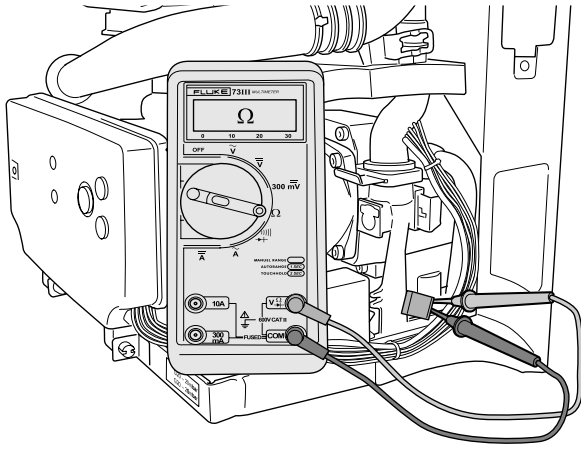

- Check the power supply cable of the 3-way valve for internal short circuits. The level of electrical resistance, measured between two wires chosen at random, must be infinitely high.

box 194

- Insert the power supply plug of the 3-way valve, fit the DBA control panel and place the boiler into operation, see box 51, 54 or 55.

box 195 Check the internal 3-way valve – drive mechanism

- Take the boiler out of operation, see box 43, 44 or 47.
- Remove the servomotor of the 3-way valve, see box 182.

box 196

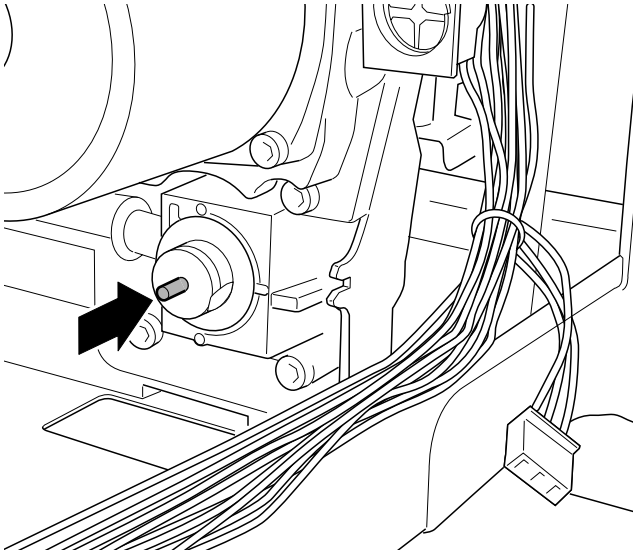

- Check to ensure that the drive mechanism of the 3-way valve is running smoothly. This is done by gradually pushing the spring fully home by hand and allowing the spring to return gradually to its home position.

box 197

- Refit the servomotor, following the above procedure in reverse order.
- Put the boiler into operation, see box 51, 54 or 55.

box 198 Replace the internal 3-way valve – drive mechanism

- Take the boiler out of operation and drain the heating system, see box 48 to 51.
- Remove the servomotor of the 3-way valve, see box 182.

box 199

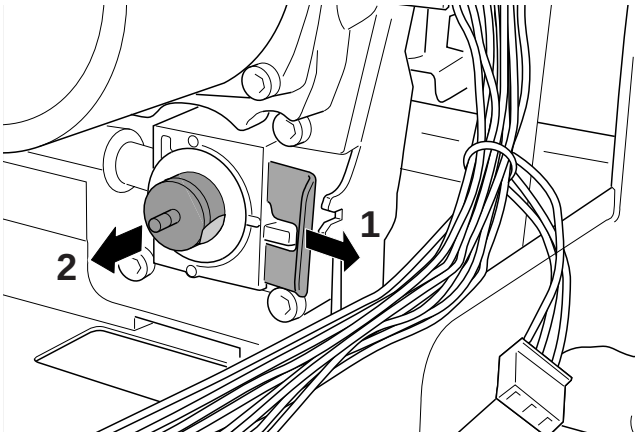

- Remove the stop spring (item 1) by pulling it in the direction of the arrow.

box 200

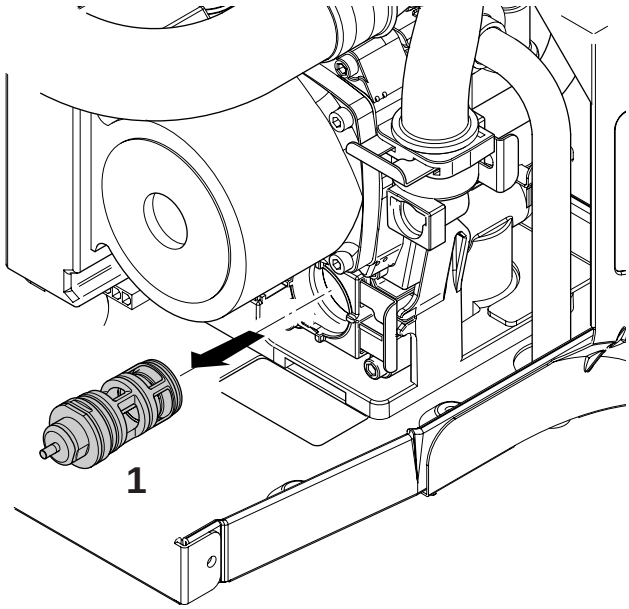

- Remove the drive mechanism (item 1) of the 3-way valve.

CAUTION!
Note that water will squirt out when the drive mechanism is removed.
Have a bucket and a supply of dry cloths to hand.

box 201

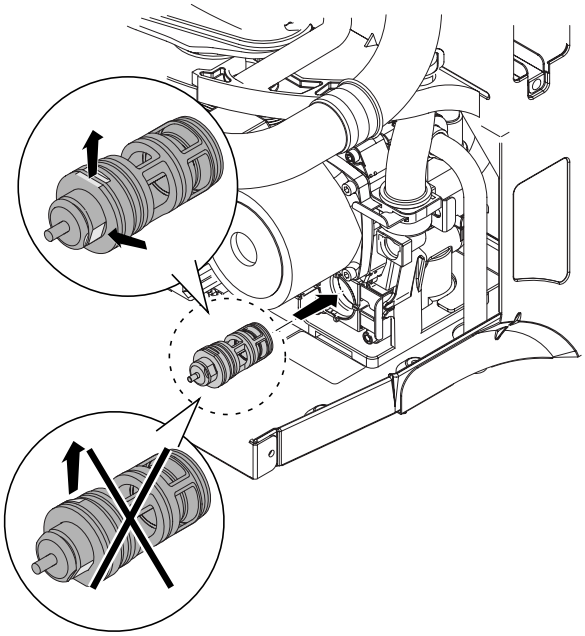

- Fit the new drive mechanism on the internal 3-way valve. Ensure that the flat side faces upwards.

box 202

- Connect the servomotor of the 3-way valve by following the above procedure in reverse order.
- Fill the heating system, vent it of air and place the boiler into operation, see box 52 to 58.

box 203 Replace the internal 3-way valve

- Take the boiler out of operation and drain the heating system, see box 48 to 51.

box 204

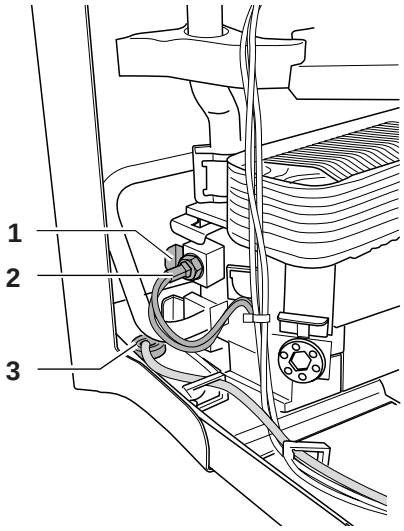

- Disconnect the cable from the main switch, see box 54.
- Pull the spring off the flow NTC sensor lead (item 1).
- Pull out the flow NTC sensor plug (item 2).
- Pull the main switch cable out of the nut (item 3).

box 205

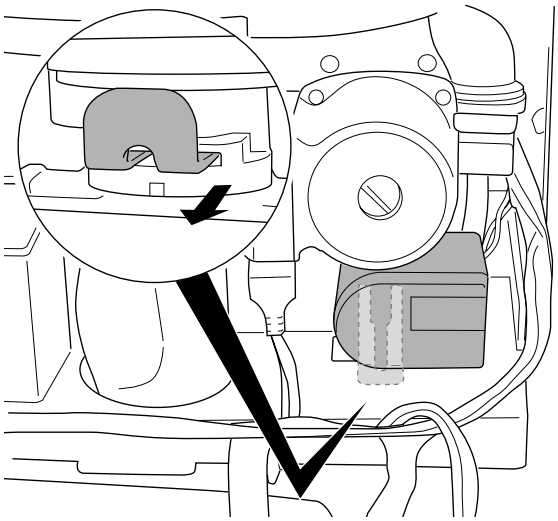

- Remove the stop spring and 3-way valve-motor.

box 206

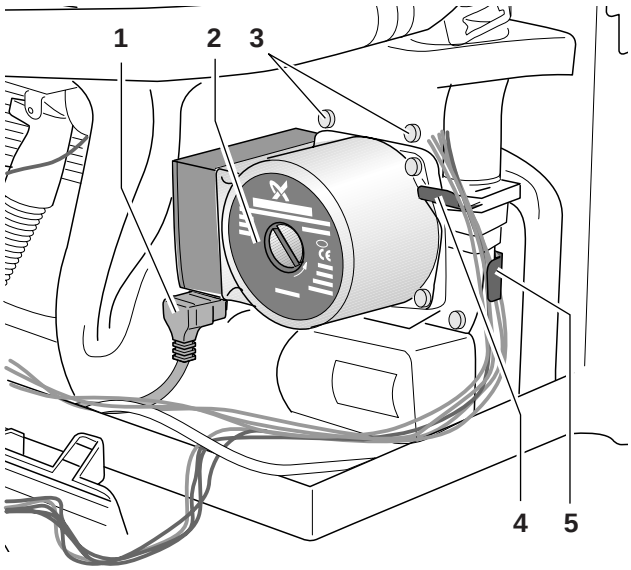

- Pull the plug (item 1) out of the pump.
- Loosen the four screws (item 3) on the pump.
- Remove the return pipe with spring (item 4).
- Remove the pipe to the expansion vessel with spring (item 5).
- Pull out the pump (item 2).

box 207

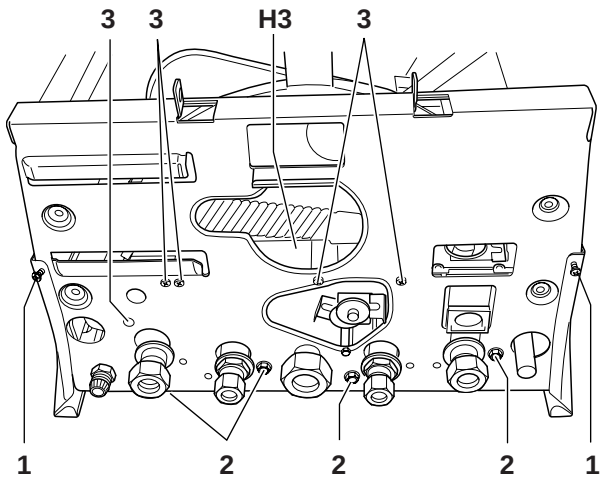

- Remove all pipes beneath the boiler.

CAUTION!
Note that water will squirt out when the internal 3-way valve is removed. Have a bucket and a supply of dry cloths to hand.

- Loosen the gas pipe at the gas valve.
- Remove the two screws (item 1).
- Remove the complete hydraulic assembly.
- Remove the four M8 nuts (item 2).
- Remove the five screws (item 3).
- Remove the plastic block (H3).

box 208

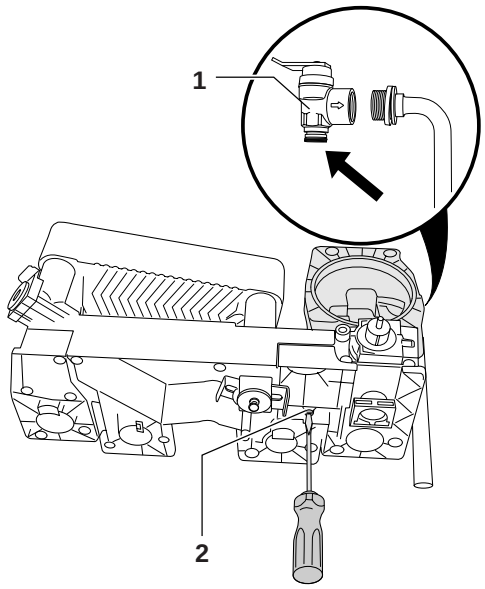

- Loosen the screw in the plastic block (item 2).
- Remove the pressure relief valve (item 1), see box 276 or 277.
- Remove the drive mechanism on the internal 3-way valve, see box 200.

CAUTION!
Note that water will squirt out when the internal 3-way valve is removed. Have a bucket and a supply of dry cloths to hand.

box 209

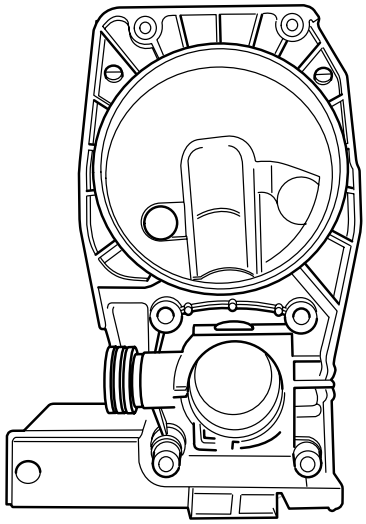

- Replace the housing of the 3-way valve.

box 210

- Refit all components, following the above procedure in reverse order.
- Fill the heating system, vent it of air and place the boiler into operation, see box 52 to 58.

box 211 Check the Boulter Buderus 24V AC external 3-way valve – movement of the servomotor

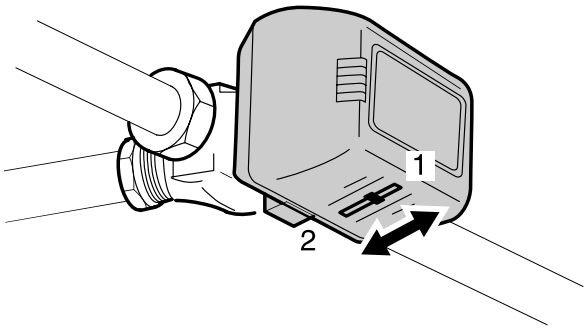

- Put the boiler into operation, see box 54 and 55.
- Adjust the hot water in the "Settings" menu on the DBA control panel of the boiler to 60 °C, see box 61.
- Open a hot water tap.
- Check to see if the servomotor of the Boulter Buderus 24V AC external 3-way valve, during the operating code ⊛ 0C rotates from the setting for heating mode (position “**1**”) to the position for hot water mode (position “**2**”).
- Close the hot water tap.
- Check to see if the servomotor runs back again.
- Adjust the hot water in the “Settings” menu on the DBA control panel of the boiler, see box 61.

box 212 Check the Boulter Buderus 24V AC external 3-way valve – activation (1)

CAUTION!
To prevent damage, do not insert the measuring electrodes of the multimeter too far into the holes of the plug-and-socket connection.

- Take the boiler out of operation, see box 43, 44 or 47.

box 213

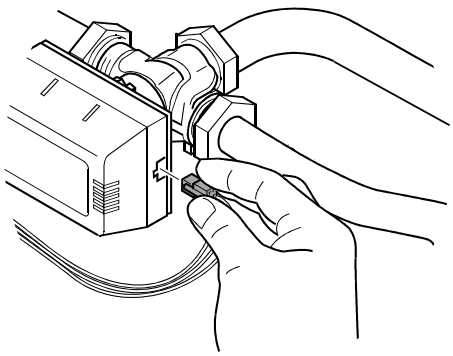

- Remove the power supply plug of the servomotor of the Boulter Buderus 24V AC external 3-way valve.

box 214

- Put the boiler into operation, see box 51, 54 or 55.

box 215

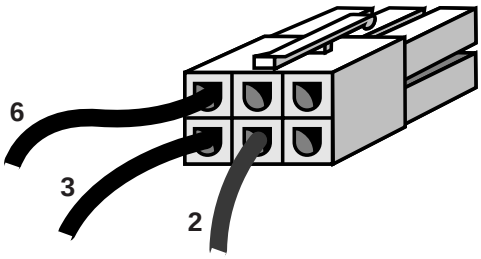

Plug-in contacts of Boulter Buderus 24V AC external 3-way valve	Purpose	Plug-in contacts on DBA control panel
2	24V AC	5
3	0V AC	6
6	_ \ __	7

- Set the multimeter to “measure AC voltage”. Minimum measuring range: 40V AC.
- Open a hot water tap.
- Adjust the hot water in the "Settings" menu on the DBA control panel of the boiler to 60 °C, see box 61.
- Check to see if, during operating code ⓐ 0C, 24 V AC is detected at plug-in contacts “2” and “6”.
- Close the hot water tap.
- Check to see if, during operating code ⓐ 0H, 24 V AC is detected at plug-in contacts “2” and “3”.

box 216

- Insert the power supply plug of the Boulter Buderus 24V AC external 3-way valve.
- Put the boiler into operation, see box 51, 54 or 55.

box 217 Replace the Boulter Buderus 24V AC external 3-way valve – servomotor

- Take the boiler out of operation, see box 43, 44 or 47.
- Remove the power supply plug of the servomotor of the Boulter Buderus 24V AC external 3-way valve, see box 213.

box 218

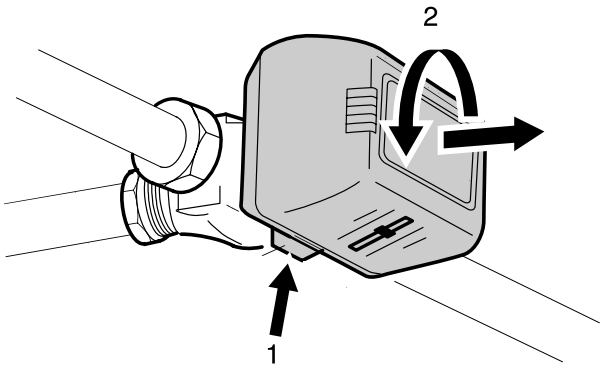

- Remove the servomotor of the Boulter Buderus 24V AC external 3-way valve. To release the servomotor press the release catch (item 1) and twist the servomotor.

DANGER OF DAMAGE TO THE SYSTEM!
Before removing the servomotor, check to see if the Boulter Buderus 24V AC external 3-way valve is in its "heating mode" position, and wait for the boiler display code ⓐ 0H to appear. This prevents sudden pressure surges occurring in the heating circuit while the removal operation is taking place, and the resultant accidental opening of the pressure relief valve.

box 219

- Fit the new servomotor by following the above procedure in reverse order.
- Put the boiler into operation, see box 51, 54 or 55.

box 220 Check the Boulter Buderus 24V AC external 3-way valve – power supply cable

CAUTION!
To prevent damage, do not insert the measuring electrodes of the multimeter too far into the holes of the plug-and-socket connection.

- Take the boiler out of operation, see box 43 or 44.
- Remove the power supply plug of the servomotor of the Boulter Buderus 24V AC external 3-way valve, see box 213.
- Remove the connection of the power supply cable of the Boulter Buderus 24V AC external 3-way valve at the boiler.
- Set multimeter to “measure resistance”.
- Check the power supply cable of the Boulter Buderus 24V AC external 3-way valve for breaks. The electrical resistance measured at each individual wire must be approximately 0 Ω.
- Check the power supply cable of the Boulter Buderus 24V AC external 3-way valve for internal short circuits. The level of electrical resistance, measured between two wires chosen at random, must be infinitely high.
- Insert the power supply plug of the Boulter Buderus 24V AC external 3-way valve.
- Connect the power supply cable of the Boulter Buderus 24V AC external 3-way valve at the boiler.
- Put the boiler into operation, see box 54 or 55.

box 221 Check the Boulter Buderus 24V AC external 3-way valve – drive mechanism

- Take the boiler out of operation, see box 43 or 44.
- Remove the servomotor of the Boulter Buderus 24V AC external 3-way valve, see box 218.

box 222

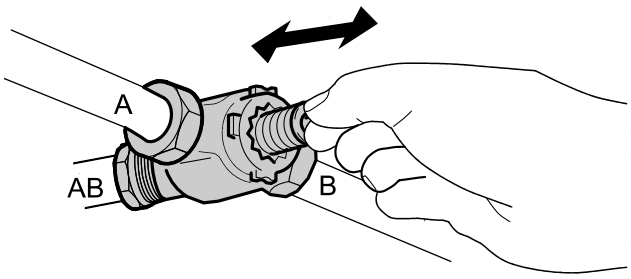

- Check to ensure that the drive mechanism of the Boulter Buderus 24V AC external 3-way valve is running smoothly. This is done by gradually pushing the spring fully home by hand and allowing the spring to return gradually to its home position.

box 223

- Refit the servomotor, following the above procedure in reverse order.
- Put the boiler into operation, see box 54 or 55.

box 224 Replace the Boulter Buderus 24V AC external 3-way valve – drive mechanism

- Take the boiler out of operation and drain the heating system, see box 48 to 51.
- Remove the servomotor of the Boulter Buderus 24V AC external 3-way valve, see box 213 or 218.

box 225

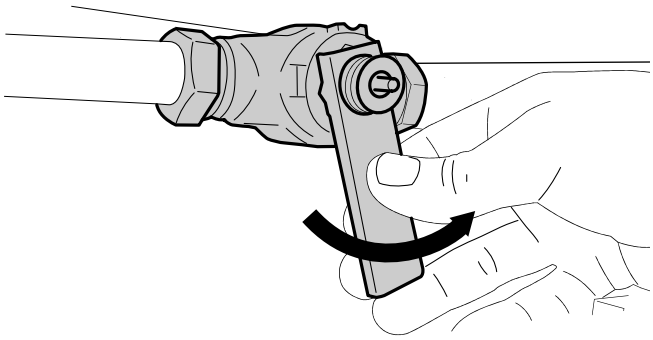

- Remove the drive mechanism of the Boulter Buderus 24V AC external 3-way valve using the wrench supplied with the drive mechanism.

CAUTION!
Note that water will squirt out when the drive mechanism is removed.
Have a bucket and a supply of dry cloths to hand.

box 226

- Fit the new drive mechanism to the Boulter Buderus 24V AC external 3-way valve.
- Connect the servomotor of the Boulter Buderus 24V AC external 3-way valve by following the above procedure in reverse order.
- Fill the heating system, vent it of air and place the boiler into operation, see box 52 to 58.

box 227 Check the Boulter Buderus 24V AC external 3-way valve – installation

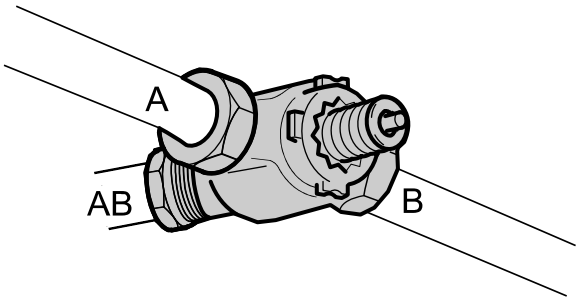

- Use the letters marked on the 3-way valve to check whether the Boulter Buderus 24V AC external 3-way valve is correctly fitted:

A = flow of storage-type water heater
B = CH flow
AB= boiler flow

box 228 Check the Boulter Buderus 24V AC external 3-way valve – activation (2)

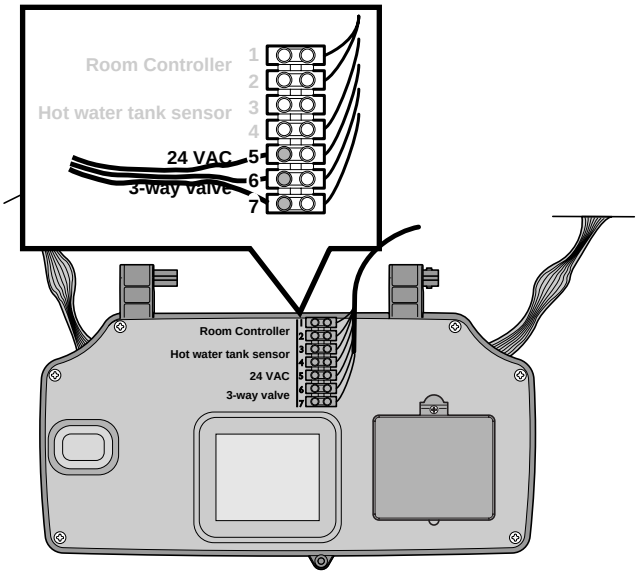

Plug-in contacts on DBA control panel	Purpose	Plug-in contacts of Boulter Buderus 24V AC external 3-way valve
5	24V AC	2
6	0V AC	3
7	_ \ __	6

- Take the boiler out of operation and remove the DBA control panel, see box 43, 44, 47, 63 or 70.
- Put the boiler into operation, see box 54 and 55.
- Open hot water tap.
- Adjust the hot water in the "Settings" menu on the DBA control panel of the boiler to 60 °C, see box 61 and box 14.
- Set the multimeter to “measure AC voltage”. Minimum measuring range: 40V AC.

Plug-and-socket connection	DBA control panel conn.
6	7
3	6
2	5

- Check whether, with operating code (^) [0C] active, there is a voltage of 24 V AC at the plug-in contacts item 6 and item 7.
- Close the hot water tap.
- Check whether, with operating code (^) [0H] active, there is a voltage of 24 V AC at the plug-in contacts item 5 and item 6.

box 229

- Fit the DBA control panel and place the boiler into operation, see box 51, 54 or 55.

box 230 Measure the gas input pressure – static and dynamic

⚠ **DANGER OF FATAL ACCIDENT!**
All work on gas supply pipes and gas-fitting components must be carried out by a company registered and authorised for this purpose.

- Take the boiler out of operation and close the gas tap, see box 43, 44, 46 or 47.
- Open some of the radiator valves.

box 231

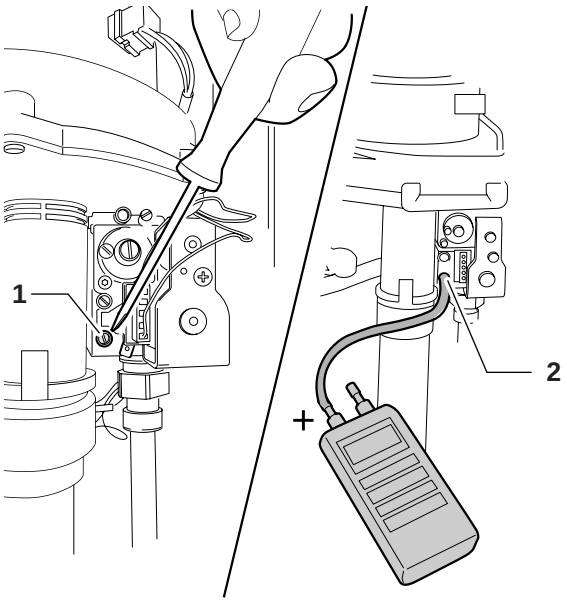

⚠ **CAUTION!**
The pressure gauge should be accurate to 2 decimal places (X.00).

- Reset the digital pressure gauge to zero.

⚠ **CAUTION!**
Throughout the measuring operation, keep the pressure gauge in the same position (horizontal or vertical) in which it was reset to zero.

- Loosen by two turns the screw on the gas connection pressure measuring nipple (item 1).
- Fit the pressure gauge to the gas connection pressure measurement nipple (item 2).

box 232

- Open the gas tap, see box 59.
- Put all other gas-fired devices (e.g. gas ovens and stoves, etc.) out of use.
- Check to see if static gas input pressure does not rise slowly for 2 minutes.
- Run all other gas-fired appliances (e.g. gas ovens and stoves, etc.) at full capacity, but do not operate the boiler.
- The static gas input pressure must be:
  for **natural gas** minimum 20 mbar and
  for **propane** minimum 37 mbar.
- Open the gas cock and place the boiler into service mode, see box 59, 54, 55 or 13.
- Press the service button "⊖" twice.
- Capacity during service mode is at "⊕" Hı = 100 % (max. heating capacity).
- Wait for 1 minute, until the boiler starts at full load.
- Measure the working gas pressure at the appliance.
- Measure the difference between the static and working gas input pressure.
  The working pressure may be:
  for **natural gas** minimum 17 mbar and
  for **propane** minimum 30 mbar.
- Take the boiler out of operation and close the gas tap, see box 43, 44 or 46.
- Remove the pressure gauge.
- Tighten the screw on the gas connection pressure measurement nipple.
- Open the gas tap, see box 59.
- Use a detection product to check the gas connection pressure measurement nipple for leaks. Use an authorised foam-type leak detection product for this purpose.
- Fit the casing and place the boiler into operation, see box 51, 54 or 55.

box 233 Measure and adjust the gas/air ratio

⚠ **DANGER OF FATAL ACCIDENT!**
All work on gas pipework and gas-fitting components must be carried out by a company registered and authorised for this purpose.

- Take the boiler out of operation and close the gas tap, see box 43, 44, 46 or 47.
- Open some of the radiator valves.

box 234

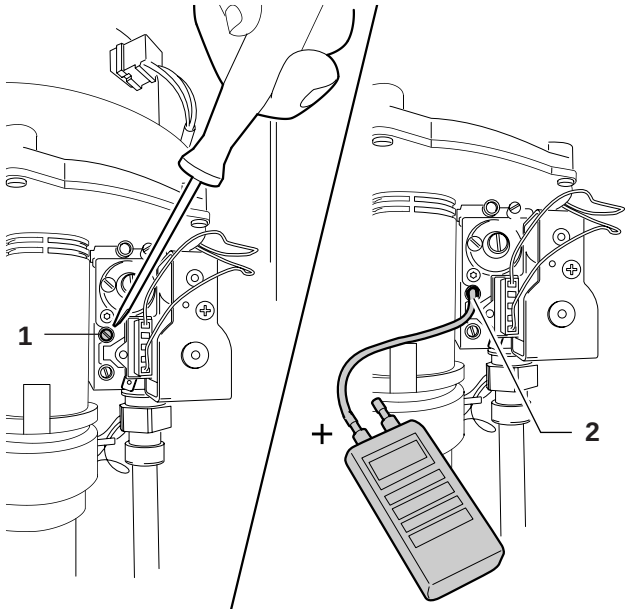

- Reset the digital pressure gauge to zero.

⚠ **CAUTION!**
Throughout the measuring operation, keep the pressure gauge in the same position (horizontal or vertical) in which it was reset to zero.

- Loosen by two turns the screw on the burner pressure measurement nipple (item 1).
- Connect the pressure gauge to the burner pressure measurement nipple (item 2).

box 235

- Open the gas cock and place the boiler into service mode, see box 59, 54, 55 or 13.
- Press the service button "⊖" once.
- Capacity during service mode is at ⊕ Lo = 25% (max. heating circuit capacity).
- Wait a short time for the boiler to be adjusted downwards.

box 236

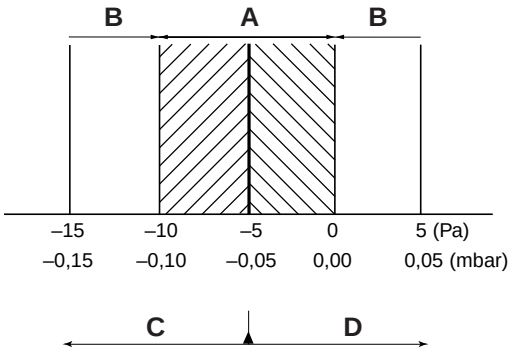

Key to terms:
A = correct; B = false; C = turn anticlockwise;
D = turn clockwise

- Check the gas/air ratio during service mode operation.
  The differential pressure ($p_{gas} - p_{air}$)
  must be –5 Pa (±5 Pa) (as indicated by the measuring device: –10 to 0 Pa).

box 237

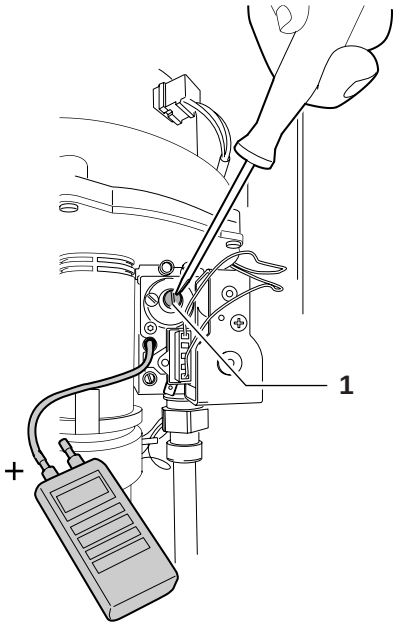

- Use the adjustment screw to readjust the gas/air ratio if necessary (item 1).

NOTE:
The adjustment screw (4mm Allen screw) is located behind the screw-on cover.

box 238

- Take the boiler out of operation and close the gas tap, see box 43, 44 or 46.
- Remove the pressure gauge.
- Tighten the screw on the burner pressure measurement nipple.
- Open the gas cock and place the boiler into full-load operation, see box 59, 54, 55 and 13.
- Wait for the boiler to start.
- Use a detection product to check the burner pressure measurement nipple for leaks. Use an authorised foam-type leak detection product for this purpose.
- Take the boiler out of operation, see box 43 or 44.
- Fit the casing and place the boiler into operation, see box 51, 54 or 55.

box 239 Vent the gas flow pipe.

DANGER OF FATAL ACCIDENT!
All work on gas supply pipes and gas-fitting components must be carried out by a company registered and authorised for this purpose.

- Take the boiler out of operation and close the gas tap, see box 43, 44, 46 or 47.

box 240

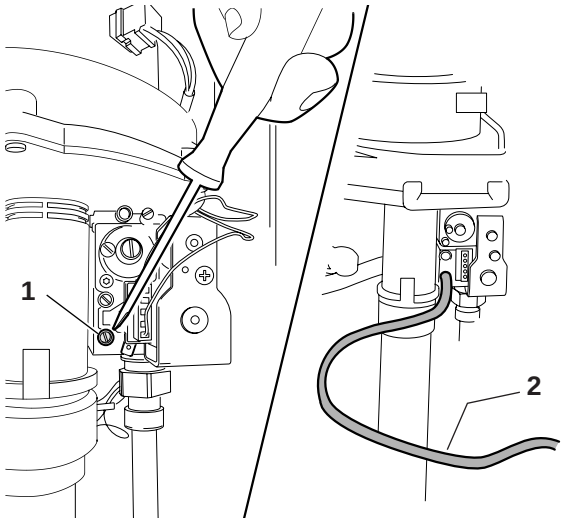

- Loosen by two turns the screw on the gas connection pressure measuring nipple (item 1).
- Connect a long hose (item 2) to the gas connection pressure measurement nipple and then run this hose out of the building.

box 241

- Leave the gas cock open until no further air escapes from the hose, see box 59.
- Close the gas cock, see box 46.
- Remove the hose from the gas connection pressure measurement nipple.
- Tighten the screw on the gas connection pressure measurement nipple.
- Open the gas tap, see box 59.
- Use a detection product to check the gas connection pressure measurement nipple for leaks. Use an authorised foam-type leak detection product for this purpose.
- Fit the casing and place the boiler into operation, see box 51, 54 or 55.

box 242 Replace the automatic air vent

- Take the boiler out of operation and drain the heating system, see box 48 to 50.

box 243

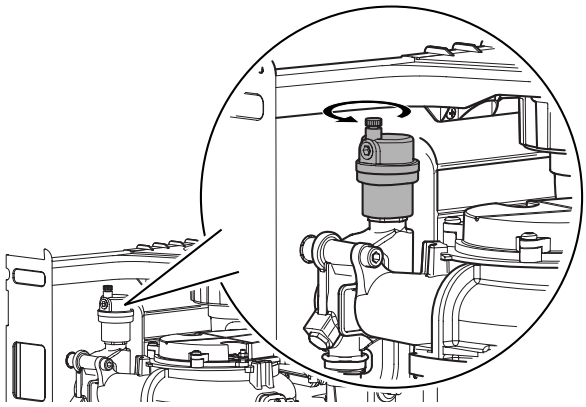

- Twist the automatic air vent in the direction of the arrow to remove.

box 244

- Fit the new automatic air vent by following the above procedure in reverse order.
- Fill the heating system, vent it of air and place the boiler into operation, see box 52 to 58.

box 245 Replace the burner

DANGER OF FATAL ACCIDENT due to electric shock

DANGER OF FATAL ACCIDENT!
All work on gas supply pipes and gas-fitting components must be carried out by a company registered and authorised for this purpose.

- Take the boiler out of operation and close the gas tap, see box 43, 44, 46 or 47.
- Remove the power supply plug of the glow ignitor, see box 131.
- Remove the plug of the ionisation electrode, see box 144.
- Remove the power supply plug of the gas valve, union nut and air silencer tube, see box 77.

box 246

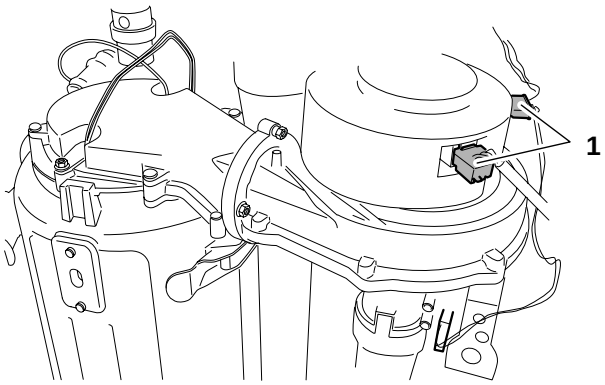

- Pull out both fan plugs (item 1).

box 247

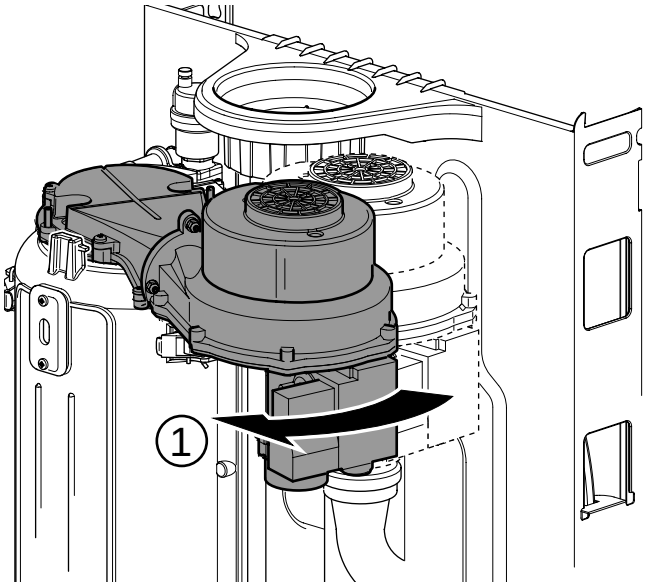

- Turn the gas/air unit clockwise by about 10°.

box 248

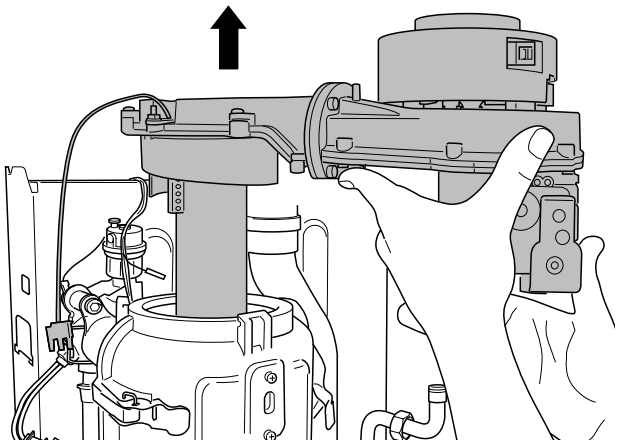

- Remove the gas/air unit along with the burner.

box 249

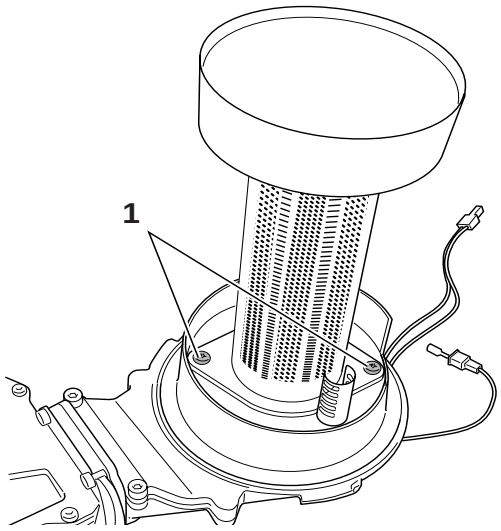

- Loosen both screws (item 1).
- Remove the burner.

box 250

- Fit the new burner to the gas/air unit. Note that a new seal must be fitted between the burner and gas/air unit.

box 251

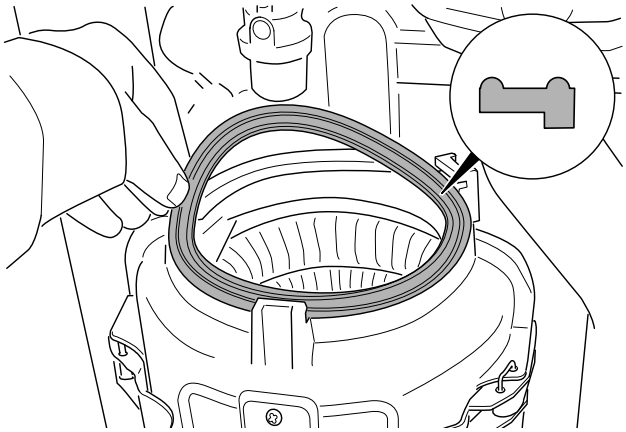

- Remove the heat exchanger-gas/air seal.

box 252

- Check the heat exchanger-gas/air seal for signs of ageing.
- Replace the heat exchanger-gas/air seal if required.
- Refit all components, following the above procedure in reverse order.
- Open the gas cock and place the boiler into full-load operation, see box 59, 54, 55 and 13.
- Carry out a gas-leak check. Check the tightness of all components that were loosened in the course of removal of the burner. Use an authorised foam-type leak detection product for this purpose.
- Remedy the cause of the gas leak.
- Open the gas cock and place the boiler into operation, see box 59, 54, 55 or 51.

box 253 Replace the sight glass

- Take the boiler out of operation, see box 43, 44 or 47.

box 254

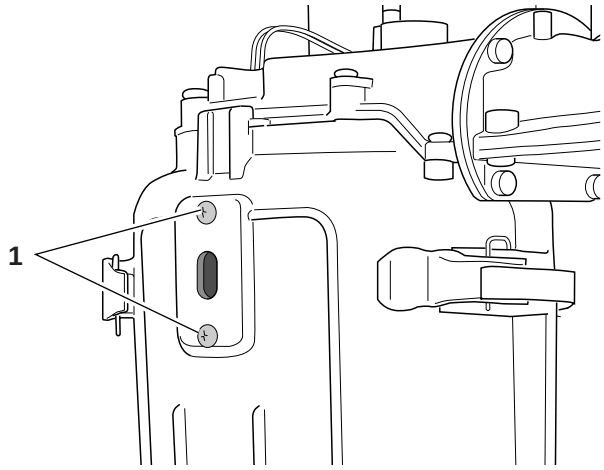

- Loosen both screws (item 1).
- Remove the sight glass along with the seals.

box 255

- Install the new sight glass. Use a new seal when doing so.
- Put the boiler into operation, see box 51, 54 or 55.

box 256 Replace/clean condensate trap and syphon

- Take the boiler out of operation, see box 43, 44 or 47.

box 257

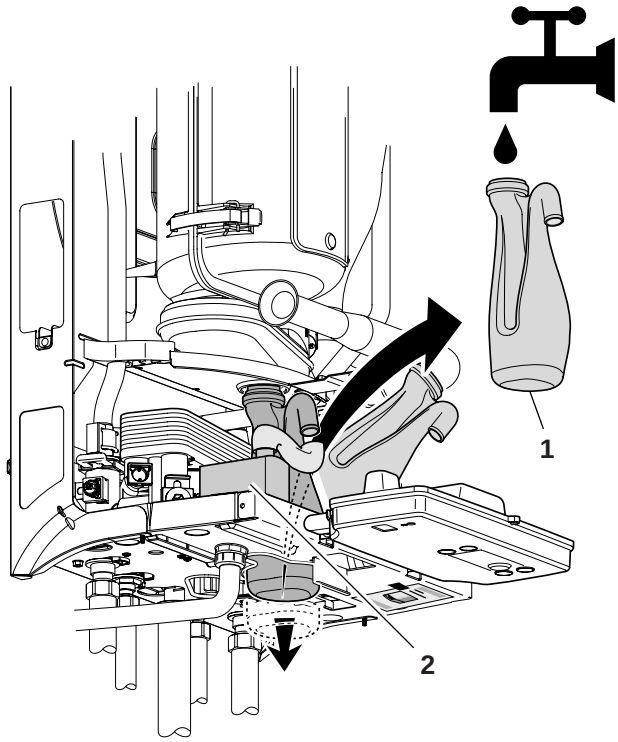

- Remove the condensate trap (item 1) and syphon (item 2).

box 258

- Clean the condensate trap and syphon.
- Fit the new or cleaned syphon.
- Put the boiler into operation, see box 51, 54 or 55.

box 259 Replace/clean the heat exchanger

DANGER OF FATAL ACCIDENT due to electric shock

DANGER OF FATAL ACCIDENT!
All work on gas supply pipes and gas-fitting components must be carried out by a company registered and authorised for this purpose.

- Take the boiler out of operation, close the gas cock and drain the heating system, see box 46 or 48 to 50.
- Remove the power supply plug of the glow ignitor, see box 131.
- Remove the plug of the ionisation electrode, see box 144.
- Remove the power supply plug of the gas valve, union nut and air silencer tube, see box 77.
- Pull out both fan plugs, see box 78, item 1.
- Remove the gas/air unit along with the burner, see box 247 and 248.
- Remove the heat exchanger-gas/air seal, see box 251.

box 260

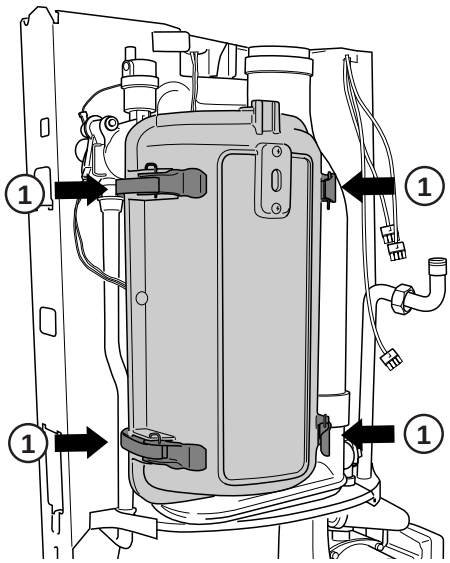

- Open the four clip fastenings(item 1).
- Clean the heat exchanger with a brush and compressed air or with TAB2.
  In the event of serious restriction, continue with box 261.

box 261

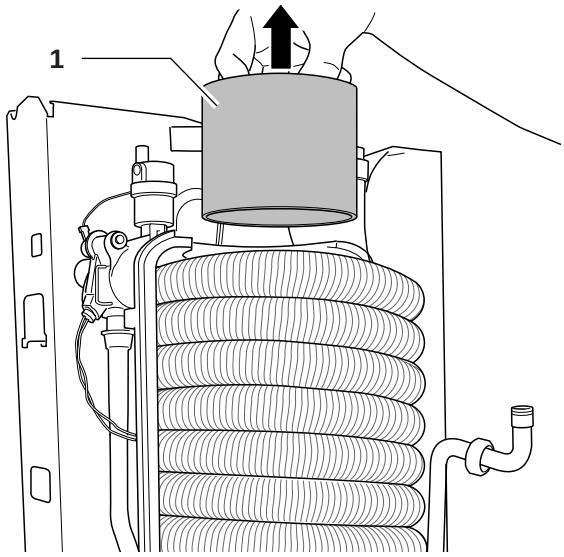

- Remove the restrictor baffle (item 1).

box 262

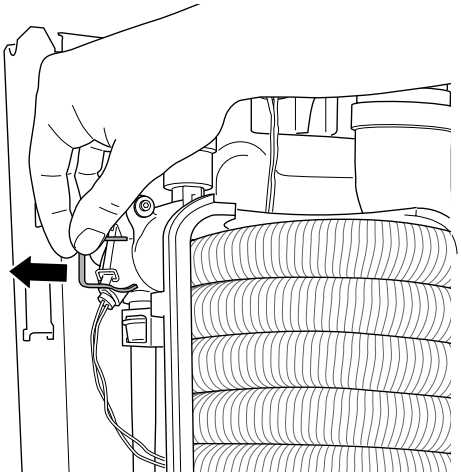

- Remove the stop spring on the top left-hand side of the heat exchanger by turning it towards the arrow.

box 263

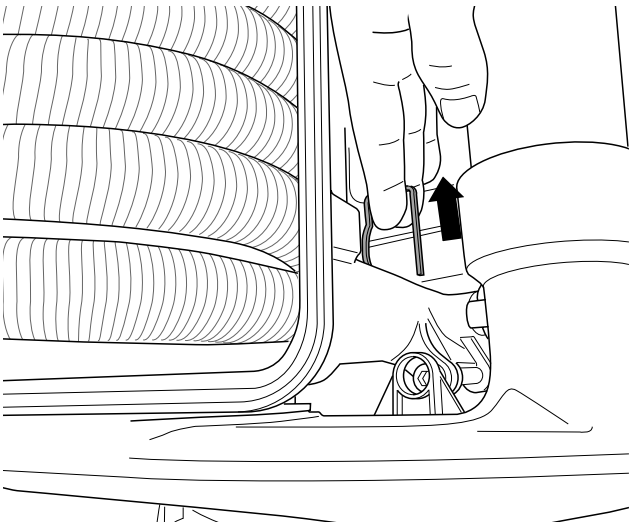

- Remove the stop spring on the bottom right-hand side of the heat exchanger by turning it towards the arrow.

box 264

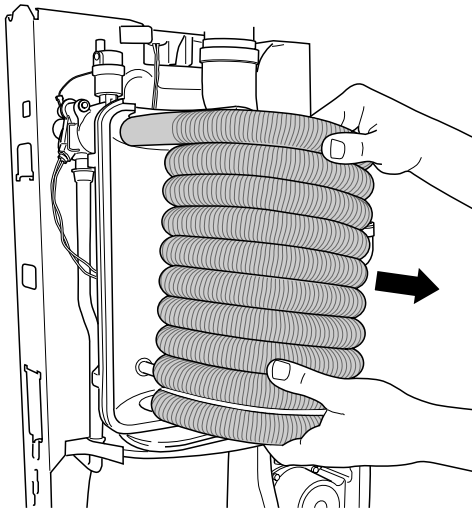

- Pull the heat exchanger towards the arrow to remove.

box 265

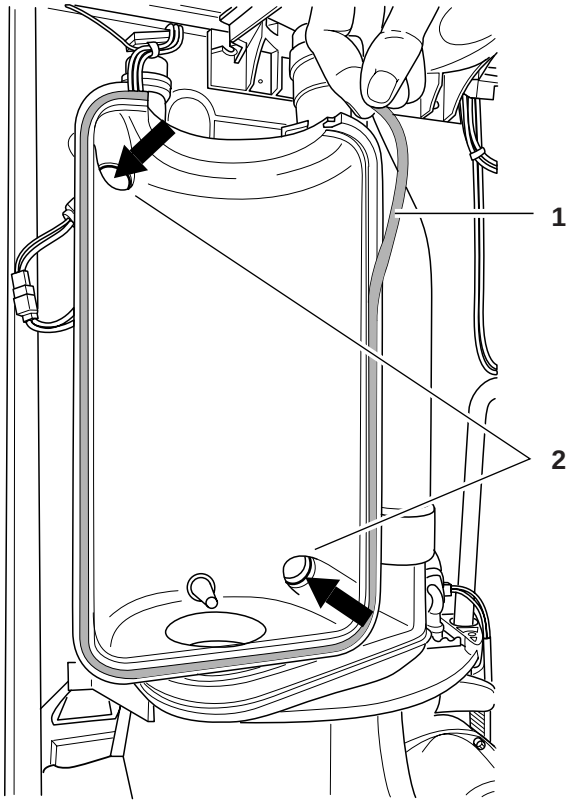

- Check the seal on the heat exchanger casing (item 1) for signs of ageing and replace if required.
- Replace the four O-rings (item 2), two on each side.

box 266

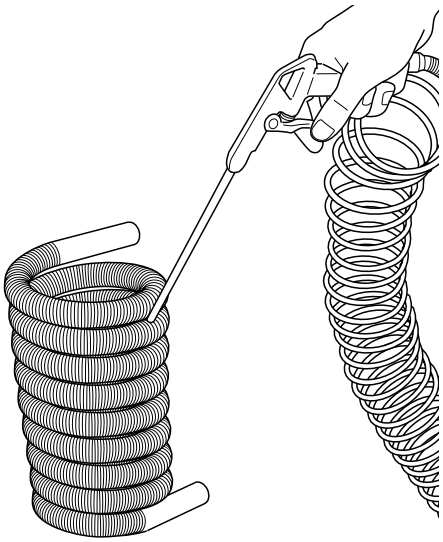

- Clean the heat exchanger with compressed air, a high-pressure hose or with water and a soft brush.

CAUTION!
When cleaning the heat exchanger **never** use a steel brush.

CAUTION!
When using compressed air:
Use eye protection, inhalation protection and hearing protection.

box 267

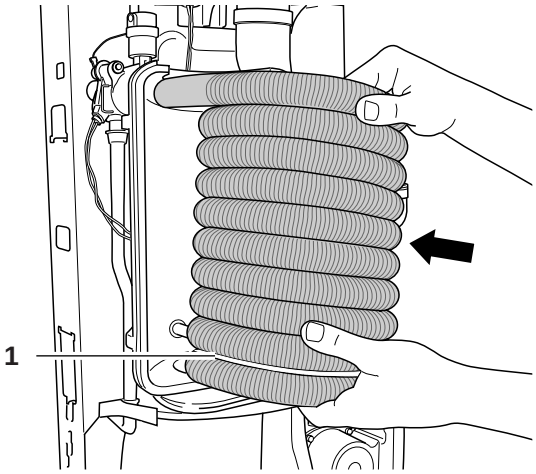

CAUTION!
Observe the position of the heat exchanger during fitting. Insert the upper section of the heat exchanger at the top.

- Fit the new or cleaned heat exchanger and all other components by following the above procedure in reverse.

CAUTION!
The released coil (item 1) touches the underside.

CAUTION!
Insert a new heat exchanger-gas/air seal before fitting the gas/air unit.

box 268

- Fill the heating system, vent it of air, open the gas tap and place the boiler into operation, see box 59 or 52 to 58.

box 269 Replace plate heat exchanger

- Take the boiler out of operation, see box 43, 44 or 47.
- Close the cold water tap.
- Drain the heating system, see box 48 to 51.
- Open hot water tap.

box 270

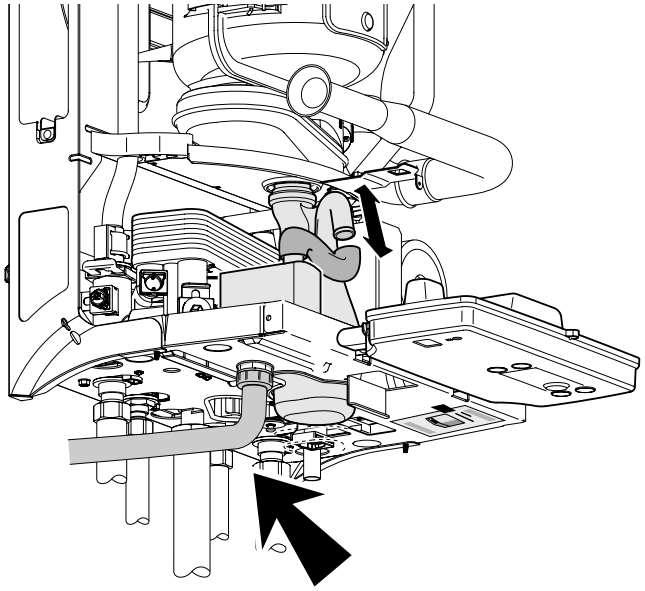

- Remove condensate trap.

box 271

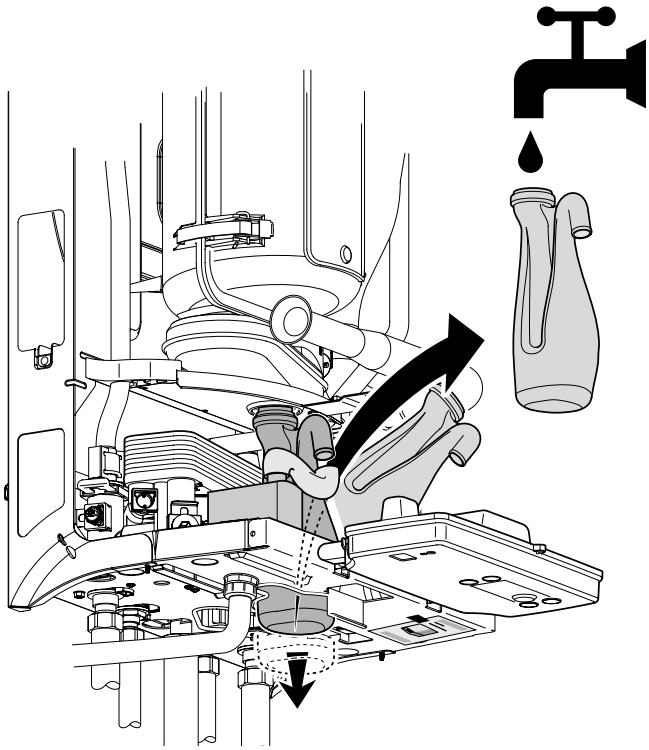

- Remove syphon.

box 272

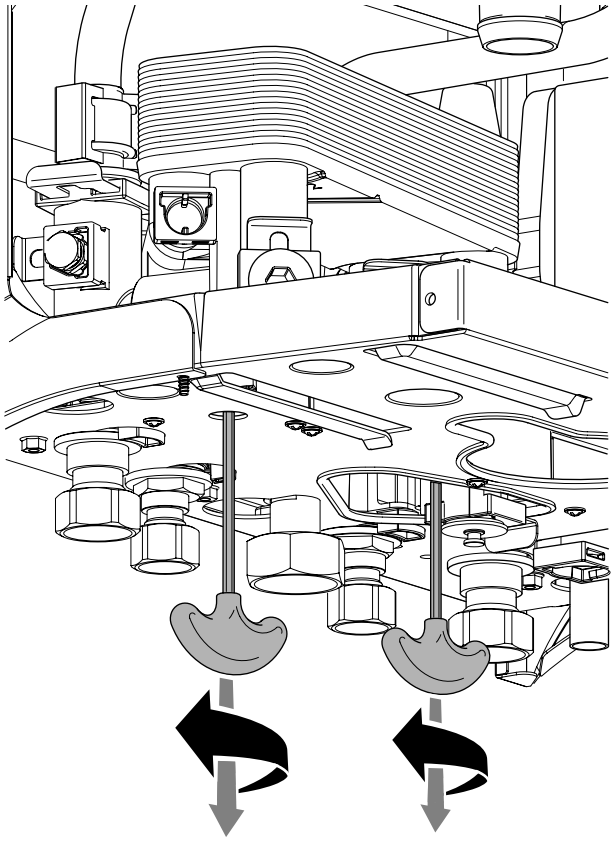

- Remove both screws from the plate heat exchanger.

box 273

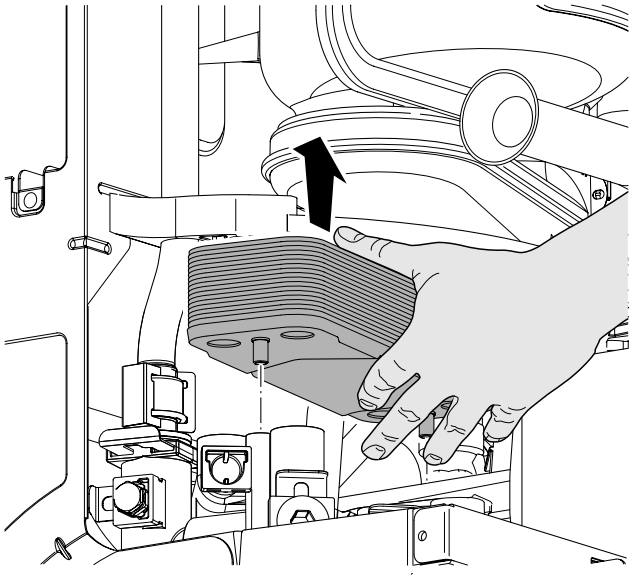

- Remove the plate heat exchanger.

box 274

- Fit new plate heat exchanger.
- Renew the four O-rings if necessary.
- Refit the plate heat exchanger and secure with the two screws.
- Open the cold water service valve.
- Open the hot water tap in order to clean the new plate heat exchanger (inside).
- Close the hot water tap.
- Fill the heating system, see box 52.
- Fit the casing and place the boiler into operation, see box 51, 54 or 55.

box 275 Replace the pressure relief valve

- Take the boiler out of operation and drain the heating system, see box 48 to 50.

box 276

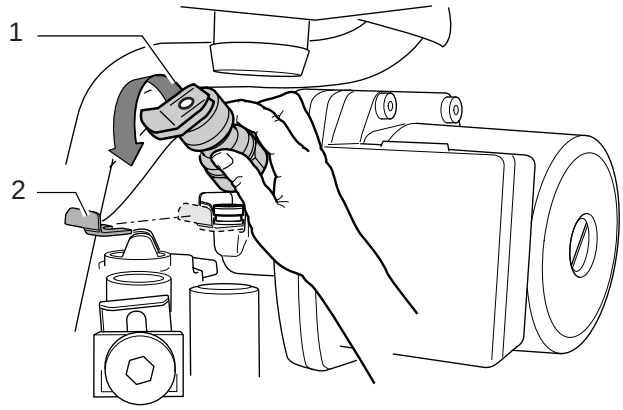

- Remove the stop spring (item 2) of the pressure relief valve.
- Remove the pressure relief valve (item 1) in the direction of the arrow.

box 277

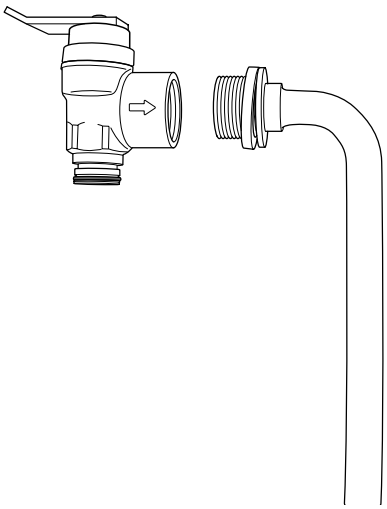

- Release the pressure relief valve from the section of condendsate outlet pipework by pulling in the direction of the arrow.

box 278

- Fit the new pressure relief valve and all other components by following the above procedure in reverse.
- Fill the heating system, vent it of air and place the boiler into operation, see box 52 to 58.

box 279 Replace the turbine flowmeter

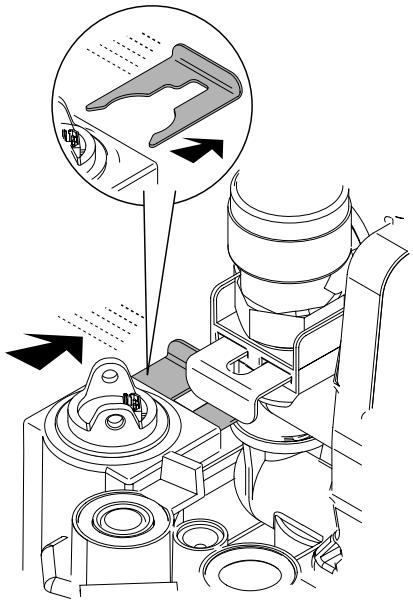

- Remove the stop spring.

box 280

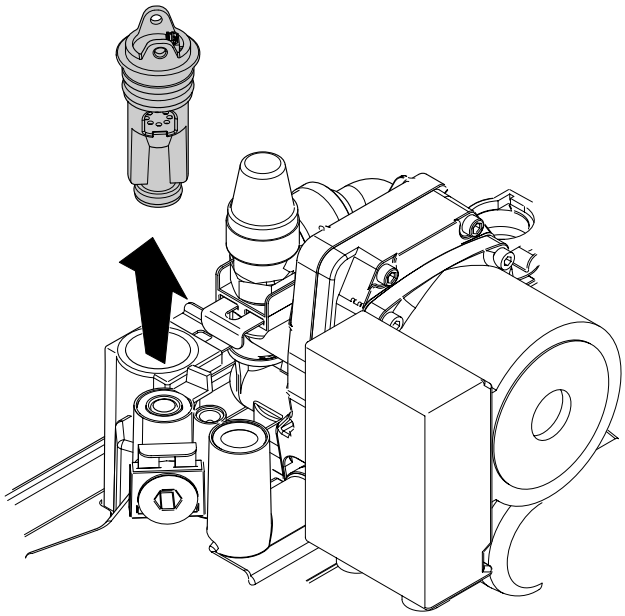

- Use a screwdriver to lever out the turbine flowmeter.

box 281 Replace the DBA control panel

DANGER OF FATAL ACCIDENT due to electric shock

- Take the boiler out of operation and remove the DBA control panel, see box 43, 44, 47, 63 or 70.

box 282

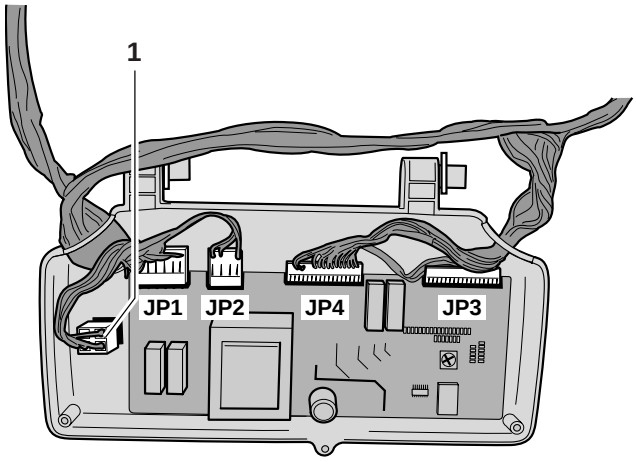

- Disconnect the five plugs (harness - item 1, JP1, JP2, JP4 and JP3) from the DBA control panel.

box 283

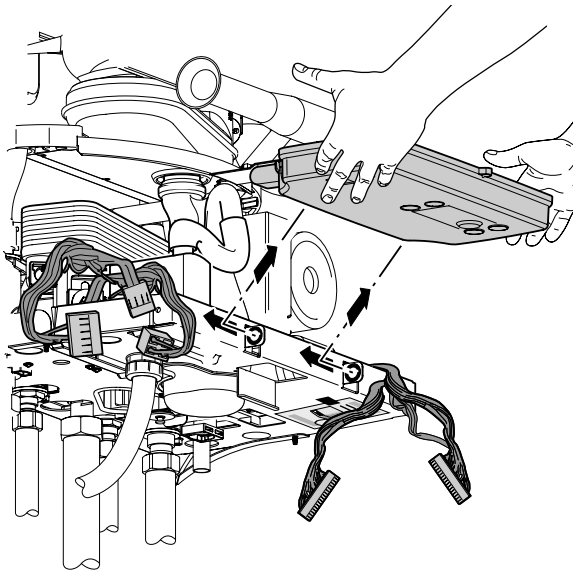

- Remove the DBA control panel.
- Fit the new DBA control panel, following the above procedure in reverse order.

CAUTION!
Please ensure that the new DBA control panel is fitted with the correct KIM (see box 284). The coloured stripe on the new KIM should match that of the old KIM. Otherwise, refit the old KIM to the new DBA control panel.

- Fit the casing and place the boiler into operation, see box 51, 54 or 55.

box 284 Check the EEPROM (KIM)

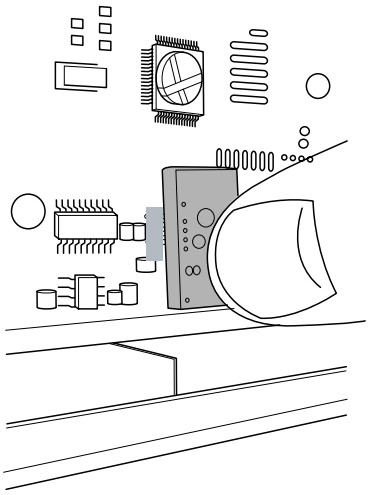

- Check the plug-and-socket connection on the EEPROM (KIM).

box 285 Check the junction box – 230V room-temperature connection

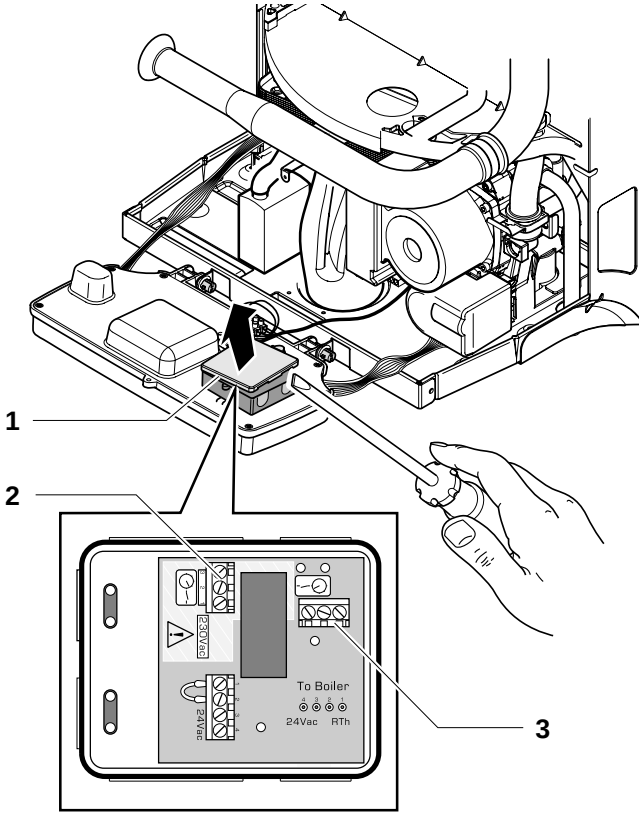

- Remove the casing lock and lower the DBA.
- Remove the cover from the RTH converter/Junction box (item 1).
- Run the 230V power supply cable through the cable pipework.
- Connect the 230V cable to item 1. The switch live should be connected to terminal 1 and the Neutral to terminal 2 of the 230V connection (item 2).

box 286 Check the junction box – 0 Volt room-temperature connection

- Remove the casing lock and lower the DBA, see box 285.
- Remove the cover from the RTH converter/junction box, see box 285, item 1.
- Run the volt free power supply cable through the cable pipework.
- Connect the volt free cable at position 1 and 2 of the volt free connection, see box 285, item 3.

box 287 Wiring diagram

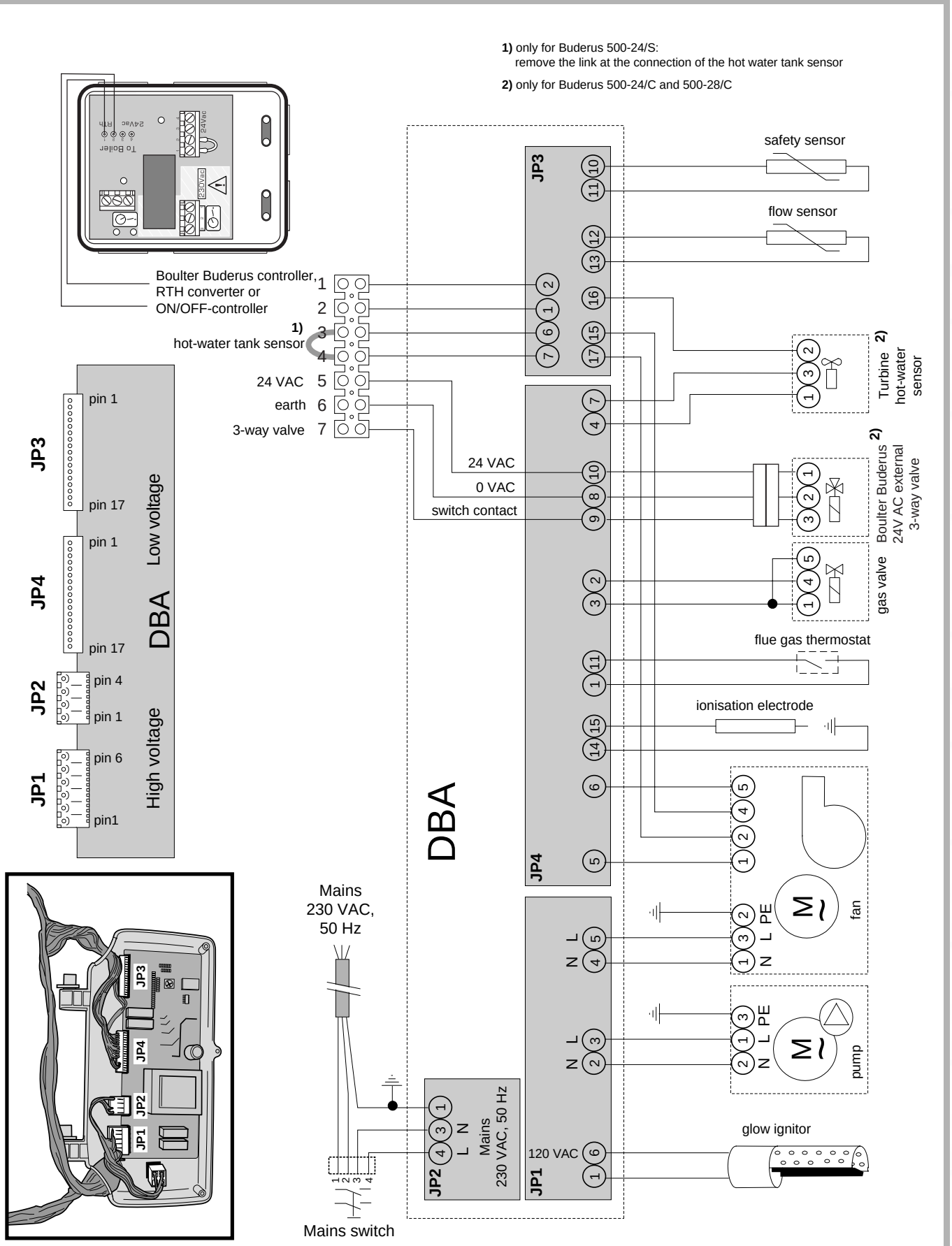

box 288 Index

A

Adjust the output flow rate (applies to combination boilers only) . . . . box 180

C

Check and replace the ionisation electrode . . . . box 155
Check fan – activation 230V AC . . . . box 66
Check fan – power supply cable (230 V AC) . . . . box 69
Check fan – tacho cable . . . . box 73
Check fan and/or replace . . . . box 76
Check gas valve – electrical resistance of power supply cable . . . . box 167
Check the Boulter Buderus 24V AC external 3-way valve – activation (1) . . . . box 212
Check the Boulter Buderus 24V AC external 3-way valve – activation (2) . . . . box 228
Check the Boulter Buderus 24V AC external 3-way valve – drive mechanism . . . . box 221
Check the Boulter Buderus 24V AC external 3-way valve – installation . . . . box 227
Check the Boulter Buderus 24V AC external 3-way valve – movement of the servomotor . . . . box 211
Check the Boulter Buderus 24V AC external 3-way valve – power supply cable . . . . box 220
Check the by-pass valve . . . . box 14
Check the flow, safety and DHW temperature sensors – cables . . . . box 112
Check the flow, safety and DHW temperature sensors (applies to external cylinder only) . . . . box 104
Check the flue-gas STL . . . . box 120
Check the flue-gas STL – cable . . . . box 126
Check the gas valve – activation . . . . box 164
Check the gas valve – internal electrical resistance . . . . box 171
Check the gas valve – power supply plug . . . . box 161
Check the glow ignitor – activation . . . . box 130
Check the glow ignitor – power supply cable . . . . box 137
Check the glow ignitor – resistance . . . . box 134
Check the internal 3-way valve – activation . . . . box 185
Check the internal 3-way valve – drive mechanism . . . . box 195
Check the internal 3-way valve – movement of the servomotor box 181
Check the internal 3-way valve – power supply cable . . . . box 191
Check the ionisation circuit – earth (ground) lead . . . . box 160
Check the ionisation electrode – cable . . . . box 151
Check the ionisation electrode – short circuits . . . . box 148
Check the pressure control valve . . . . box 85
Check the pump – activation . . . . box 91
Check the pump – mechanical restrictions . . . . box 89
Check the pump – power supply cable . . . . box 95
Check the pump – soiling . . . . box 97
Check/replace fuses (1) . . . . box 62

D

Draining the system . . . . box 48

F

Filling the system and venting it of air . . . . box 52

I

Initial startup . . . . box 59
Internal 3-way valve – replace the servomotor . . . . box 190

M

Measure and adjust the gas/air ratio . . . . box 233
Measure the gas input pressure – static and dynamic . . . . box 230
Measure the ionisation current . . . . box 143

R

Removal of casing . . . . box 47
Replace plate heat exchanger . . . . box 269
Replace the automatic air vent . . . . box 242
Replace the Boulter Buderus 24V AC external 3-way valve – drive mechanism . . . . box 224
Replace the Boulter Buderus 24V AC external 3-way valve – servomotor . . . . box 217
Replace the burner . . . . box 245
Replace the DBA control panel . . . . box 281
Replace the flow NTC sensor and/or safety sensor . . . . box 116
Replace the flue-gas STL . . . . box 129
Replace the gas valve . . . . box 174
Replace the glow ignitor . . . . box 140
Replace the internal 3-way valve . . . . box 203
Replace the internal 3-way valve – drive mechanism . . . . box 198
Replace the pressure relief valve . . . . box 275
Replace the pump . . . . box 101
Replace the sight glass . . . . box 253
Replace/clean condensate trap and syphon . . . . box 256
Replace/clean the heat exchanger . . . . box 259

S

Shutting down . . . . box 43

T

Technical specifications . . . . box 5

V

Vent the gas flow pipe . . . . box 239

W

Wiring diagram . . . . box 287

Notes

spares & parts online IBASIS.CO.UK

spares & parts online IBASIS.co.uk

Boulter
Buderus

Heating system specialist:

Boulter Buderus Ltd.
Magnet House

30 Whitehouse Road
Ipswich
Suffolk, IP1 5JA
Telephone: 0044 (0)1473 - 241555
Fax: 0044 (0)1473 - 241321

Sales Boilers: 0044 (0)1473 - 243780

Customer Services (gas): 0044 (0)870 - 421 5933

Technical Product Support (gas): 0044 (0)870 - 421 5944

http://www.boulter-buderus.co.uk
e-mail: sales@boulter-buderus.co.uk

721.489A – 2219A – 02/2005

spares & parts online IBASIS.CO.UK