Installation and servicing instructions

Wall-mounted condensing gas boiler Buderus 600 - 11R / 19R / 24R

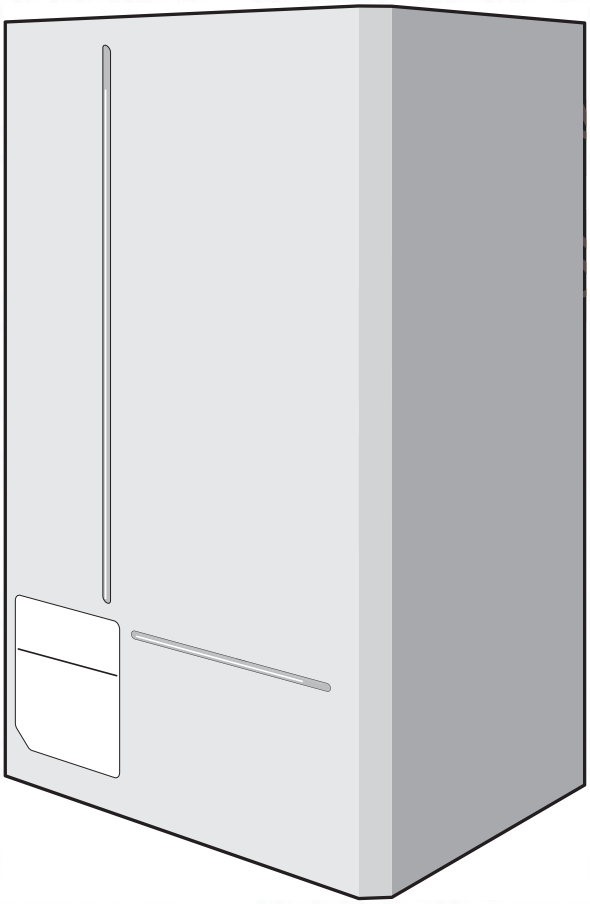

benchmark™

Buderus

The boiler meets the basic requirements of the appropriate standards and directives.

Conformity has been substantiated by the proper documents which - together with the declaration of conformity - are filed with the manufacturer.

Buderus
HEIZTECHNIK

Konformitätserklärung

Declaration of conformity

Déclaration de conformité

Wir
We
Nous

Buderus Heiztechnik GmbH, D-35576 Wetzlar

erklären in alleiniger Verantwortung , dass das Produkt
declare under our responsibility that the product
déclarons sous notre seule responsabilité que le produit

Buderus 600 Series

konform ist mit den Anforderungen der Richtlinien
is in conformity with the requirements of the directives
est conforme aux exigences des directives

Richtlinie Directive Directive		Norm Standard Norme	Identnummer Identification number Numéro d'identification
90/396/EEC	gas appliance directive	EN 483 EN 677 EN 625	CE-0063BO3062
92/42/EEC	boiler efficiency directive	-	CE-0063BO3062
73/23/EEC	low voltage directive	EN 60335	-
89/336/EEC	EMC directive	EN 55014 EN 60730-1 EN 50081-1	-

Ergänzung für Deutschland :
Supplement for Germany :
Supplément pour l'Allemagne :

- HeizAnlV vom 04.05.1998 : Brennwertkessel gemäß § 2, Abs. 8
- 1.BImSchV vom 07.08.1996 : NO_x < 80 mg/kWh (Erdgas) gemäß § 7, Abs. 2

Wetzlar, 16.06.2000

BUDERUS HEIZTECHNIK GMBH

Becker Dr. Schulte

BHG 6156 1098 hu

Subject to technical modifications!

Constant development efforts may result in minor deviations in illustrations, functional steps and technical data.

Updating the documentation

If you have suggestions for improvement or have found discrepancies, please do not hesitate to contact us.

Contents

1 Installation 9
1.1 Dimensions and connections 9
1.2 Boiler assembly - exploded view 10
1.3 Flue Installation 11
1.4 Items supplied with unit 13
1.5 Transport 13
1.6 Pipe connections 14
1.7 Flue installation 15
1.8 Electrical connections. 17
1.9 Timing and temperature control 19

2 Initial start-up 20
2.1 Preparing the boiler for operation. 20

3 Inspection 26
3.1 Preparing the heating boiler for inspection. 26

4 Maintenance 27
4.1 Clean the heat exchanger, burner and condensate trap 27

5 Servicing 31
5.1 Operating codes 31
5.2 Fault codes. 32
5.3 Checking and replacing parts. 40

6 Conversion to another type of gas 48

7 Appendix. 50
7.1 Technical specifications 50
7.2 Short list of spare parts 52

8 Reports 53
8.1 Start-up report 53
8.2 Inspection and maintenance reports 54

G. C. Aplliance No. :

Buderus 600 - 11R	41-110-21
Buderus 600 - 19R	41-110-22
Buderus 600 - 24R	41-110-23

Preface

These installation and servicing instructions apply to:
Buderus wall-mounted condensing gas boilers
600 - 11R / 19R / 24R.

Model: C_{13}, C_{33}, C_{53}

Type: GB II_{2H3P} 20 mbar, 37 mbar

Fuse rating: 1.25 Ampere slow blow

Power rating: 230 VAC, 50 Hz, IPX4D

Important general instructions for use

Only use the boiler in accordance with its designated use and the installation and servicing instructions. Servicing and repair must be carried out by CORGI registered installer. Only use the boiler in combinations and with the accessories and spare parts indicated in the installation and servicing instructions. Other combinations, accessories and consumables may only be used if they are expressly provided for the designated use and if system performance and safety are not affected in any way.

The boiler is suitable for connection to fully pumped, open vented or sealed water systems.
Adequate arrangements for completely draining the system by provision of draining valves must be provided in the installation pipework.

Subject to technical modifications.

As a result of our policy of constant development, there may be small differences between illustrations, functional steps and technical data.

BENCHMARK' Log Book

All Boulter Buderus gas fired boilers now include an installation, commissioning and service record log book. The details of the log book will be required in the event of any warranty work being requested.
Please complete the appropriate sections on completion of the installation and commissioning.

REMEMBER: Please hand the log book back to the user.

Regulations and directives

It is law that all gas appliances are installed and serviced by a CORGI registered installer in accordance with the regulations. Failure to install appliances correctly could lead to prosecution. It is in your own interest, and that of safety, to ensure the law is complied with.

The installation must also be in accordance with the latest I.E.E (**BS.7671**) Wiring Regulations, local building regulations, water regulations, the building regulations and the Building Standards (Scotland) and any relevant requirements of the local authority.

Detailed recommendations are contained in the following British Standard Codes of Practice:

BS. 5440:1	Flues (for gas appliances of rated input not exceeding 70 kW).
BS. 5440:2	Ventilation (for gas appliances of rated input not exceeding 70 kW).
BS. 5449	Forced circulation hot water systems.
BS. 5546	Installation of gas hot water supplies for domestic purposes (2nd. family Gases).
BS. 6798	Installation of gas fired hot water boilers of rated input not exceeding 60 kW.
BS. 6891	Low pressure installation pipes.
IGE/UP/1b	Tightness testing and purging domestic sized gas installations.

Health and & Safety Document No. 635.

The Electricity at Work Regulations, 1989.

The manufacturer's notes must not be taken, in any way, as overriding statutory obligations.

The design and construction of the Buderus wall-mounted condensing gas boiler 600 - 11R/19R/24R conforms to the basic specifications listed in the European directive governing gas-fired appliances 90/396/EEC, and with respect to EN 625, EN 483 and EN 677.

NOTE
Observe the corresponding technical rules and the building supervisory and statutory regulations when installing and operating the system.

WARNING!
Keep the burner-control unit housing CLOSED when working on water-bearing components.

NOTE
It is mandatory to clean and service the system once a year. This includes an inspection of the entire system to see if it is in full working order. Defects and faults must be eliminated immediately.

NOTE
When instructions aren't followed, warranty expires.

Timber Framed Buildings

If the boiler is to be fitted in a timber framed building it should be fitted in accordance with the Institute of Gas Engineering document **IGE/UP/7:1998.**

Bathroom Installations

This appliance is rated IPX4D.

The boiler may be installed in any room or internal space, although particular attention is drawn to the requirements of the current IEE (**BS.7671**) Wiring Regulations and, in Scotland, the electrical provisions of the building regulations applicable in Scotland, with respect to the installation of the boiler in a room or internal space containing a bath or shower.

If the appliance is to be installed in a room containing a bath or shower then, providing water jets are not going to be used for cleaning purposes (as in communal baths/showers), the appliance can be installed in Zone 3, as detailed in **BS.7671**.

Compartment Installations

A compartment used to enclose the boiler should be designed and constructed especially for this purpose.

An existing cupboard or compartment may be used, provided that it is modified for the purpose.

In both cases, details of essential features of cupboard/ compartment design, including airing cupboard installation, are to conform to the following:
BS 6798 (No cupboard ventilation is required - see 'Air Supply' for details).

It is not necessary to have a purpose-provided air vent in the room or internal space in which the boiler is installed. Neither is it necessary to ventilate a cupboard or compartment in which the boiler is installed, due to the low surface temperatures of the boiler casing during operation; therefore the requirements of **BS 6798**, **Clause 12**, and **BS 5440:2** may be disregarded.

The position selected for installation MUST allow adequate space for servicing in front of the boiler.

For the minimum clearances required for safety and subsequent service, see the wall mounting template.
In addition, sufficient space may be required to allow lifting access to the wall mounting plate.

Wall-mounted condensing gas boilers must only be operated with the combustion air/flue gas systems especially devised and authorised for this type of boiler.

Observe the relevant standards, regulations and legislation of the country of final use.

CAUTION
Use this device for its intended purpose only.

DANGER!
Notes relating to the heating system water.

Thoroughly flush the system before it is filled with water. Use only untreated water or water treatment product such as Sentinal X100 to fill and top up the system.

When using water treatment, only products suitable for use with Boulter Buderus heat exchangers are permitted (e.g. Sentinel X100). Your warranty is at risk if an incorrect water treatment product is used in conjunction with this appliance. For more information, contact Boulter Buderus Product Support Department.

It is most important that the correct concentration of the water treatment product is maintained in accordance with the manufacturer's instructions.

If the boiler is used in an existing system any unsuitable additives MUST be removed by thorough cleaning. **BS.7593:1992** details the steps necessary to clean a domestic central heating system.

In hard water areas, treatment to prevent lime scale may be necessary - however, the use of artificially softened water is NOT permitted.

Under no circumstances should the boiler be fired before the system has been thoroughly flushed.

Do not use water softened in a salt bedding exchanger.

Do not use anti-freeze or other additives.

The expansion vessel must be of sufficient size.

When oxygen-permeable pipes are used (e. g. for floor heating systems) the system must be separated by means of heat exchangers. Unsuitable heating water promotes sludge formation and corrosion. This may cause malfunctions and damage in the heat exchanger.

This appliance is not suitable for gravity central heating nor are they suitable for the provision of gravity domestic hot water.

The boiler must be vented.

Drain cocks must be located in accessible positions, which permits the draining of the entire system. They should be at least ½" BSP nominal size and be in accordance with **BS. 2879**.

The hydraulic resistance of the boilers is shown in the graph below.

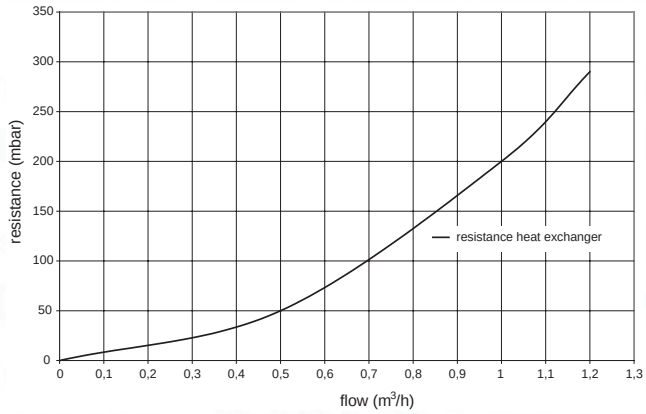

NOTE:
Notes relating to domestic hot water.

The boiler must not be used for direct hot water supply.

The hot water storage cylinder must be of the indirect type.

Single feed, indirect cylinders are not recommended and must not be used on sealed systems.

The hotwater cylinder and ancillary pipework, not forming part of the useful heating surface, should be lagged to prevent heat loss and any possible freezing - particularly wher pipes run throughroof spaces and ventilated underfloor spaces.

The domestic hot water service must be in accordance with **BS 5546** and **BS 6700**.

Safe handling of substances

Care should be taken when handling the boiler's insulation, which can cause irritation to the skin.

No asbestos, mercury or CFCs are included in any part of the boiler and its manufacture.

Open vent system requirements

The system should be vented directly off the boiler flow pipe, as close to the boiler as possible. The cold feed entry should be inverted and MUST be positioned between the pump and the vent, and not more than 150 mm (6") away from the vent connection.

NOTE
Combined feed and vent pipes may also be fitted.

There should be a minimum height, 450 mm (18"), of open vent above the cistern water level. The vertical distance between the highest point of the system and the feed/expansion cistern water level MUST not be less than 1000 mm (40"). The pump must be fitted on the flow side of the boiler.

A suitable pump is a domestic circulator capable of providing a maximum 11 °C (20 °F) temperature differential across the boiler with the whole of the heating circuit open. With the minimum flow circuit allowed by the controls the differential must not exceed 25 °C (see also the graph on page 5).

The vertical distance between the pump and feed/expansion cistern MUST comply with the pump manufacturer's minimum requirements, to avoid cavitation. Should these conditions not apply either lower the pump position or raise the cistern above the minimum requirements specified by Boulter Buderus. The isolation valves should be fitted as close to the pump as possible.

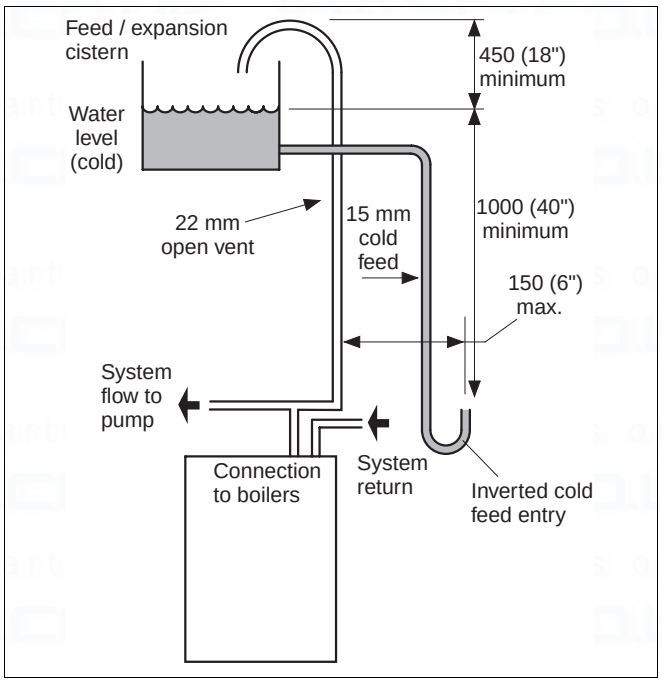

fig. 1 Open vent system

Schematic pipework and system balancing

The boiler does not normally need a bypass but at least some radiators on the heating circuit, of load at least 10% of the minimum boiler output, must be provided with twin lockshield valves so that this minimum heating load is always available (see footnote re. thermostatic radiator valves).

Balancing

1. Set the programmer to ON for both CH and HW. Turn the cylinder thermostat down. Close the manual or thermostatic valves on all radiators leaving the twin lockshield valves (on the radiators referred to above) in the open position. Turn up the room thermostat and adjust these lockshield valves to give boiler flow and return temperatures not more than 20 °C apart. These valves should now be left as set.
2. Open all manual or thermostatic radiator valves and adjust the lockshield valves on remaining radiators to give around 11 °C temperature drop at each radiator.
3. Turn up the cylinder thermostat and adjust the cylinder balancing valve so that the cylinder achieves a maximum flow consistent with adequate flow to the radiators. Check that with only the domestic hot water loop in circuit a differential temperature of 20 °C across the boiler is not exceeded.
4. Adjust room and cylinder thermostats and programmer to NORMAL settings.

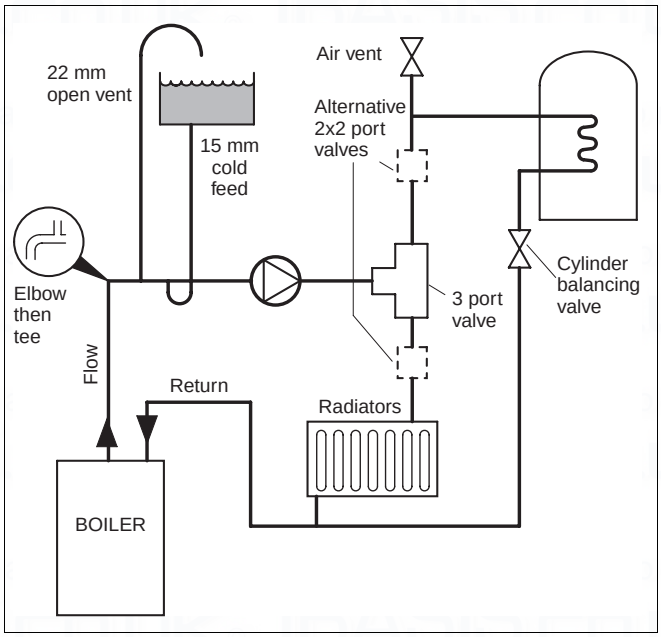

fig. 2 Schematic pipework and system

Thermostatic radiator valves

Boulter Buderus support the recommendations made in **BS. 5449**, and by leading manufacturers of domestic heating controls, that heating systems utilising the thermostatic radiator valve control of temperature in individual rooms shall also be fitted with a room thermostat, controlling the temperature in a space served by radiators not fitted with such a valve.

Such an arrangement will provide for potentially more efficient control of the environment and will also avoid the continuous running of the circulation pump during programmed heating ON periods - thus saving electrical energy.

It is, therefore, strongly recommended that, when thermostatic radiator valves are used, space heating temperature control over a living/dining area or a hallway having a heating requirement of at least 10% of the minimum boiler heat output, is achieved using a room thermostat whilst other rooms are individually controlled by thermostatic radiator valves.

Sealed system requirements

NOTE
The method of filling, refilling, topping up or flushing sealed hot water circuit from the mains via a temporary hose connection is only allowed if acceptable to the local water authority.

1. General

The installation must comply with the requirements of **BS. 6798** and **BS. 5449**.

The installation should be designed to work with flow temperatures of up to 80 °C.

All components of the system, including the heat exchanger of the indirect cylinder, must be suitable for a working pressure of 3 bar (45 lb/in^2) and temperature of 110 °C. Care should be taken in making all connections so that the risk of leakage is minimised.\

2. Safety valve

A spring loaded safety valve complying with the relevant requirements of **BS. 6759** must be fitted in the flow pipe as close to the boiler as possible and with no intervening valve or restriction. The valve should have the following features:

– A non-adjustable preset lift pressure not exceeding 3 bar (45 lb/in^2);

– A manual testing device;

– Provision for connection of a discharge pipe. The valve or discharge pipe should be positioned so that the discharge of water or steam cannot create a hazard to the occupants of the premises or cause damage to electrical components and wiring.

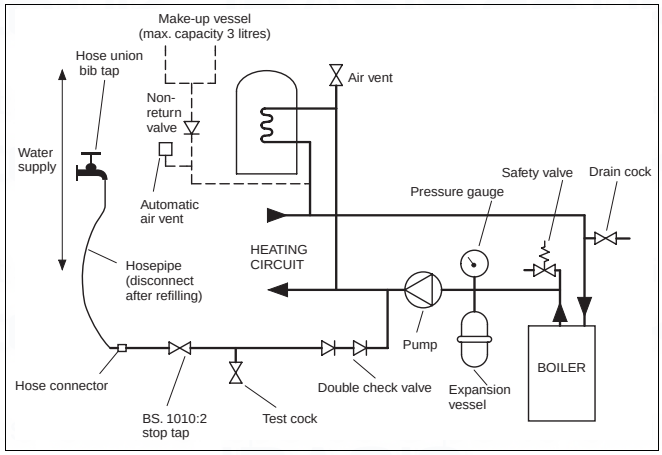

fig. 3 Sealed system

3. Pressure gauge

A pressure gauge covering at least the range of 0-4 bar (0-60 lb/in^2) must be fitted to the system. The gauge should be easily seen from the filling point and should preferably be connected at the same point as the expansion vessel.

4. Expansion vessel

A diaphragm type expansion vessel must be connected to a point close to the inlet side of the pump, the connecting pipe being not less than 15 mm (½" nominal) size and not incorporating valves of any sort.

The vessel capacity must be adequate to accept the expansion of the system water when heated to 110 °C (230° F).

The charge pressure must not be less than the static water head above the vessel. The pressure attained in the system when heated to 110 °C (230° F) should be at least 0.35 bar (5 lb/in^2) less than the lift pressure of the safety valve.
For guidance on vessel sizing refer to table 1.

For further details refer to **BS. 5449** and **BS. 7074:1** and the British Gas Corporation publication: "Material and Installation Specifications for Domestic Central Heating and Hot Water".

5. Cylinder

The cylinder must be either of the indirect coil type or a direct cylinder fitted with an immersion calorifier which is suitable for operating on a gauge of 0.35 bar (5 lb/in^2) in excess of the safety valve setting. Single feed indirect cylinders are not suitable for sealed systems.

6. Make-up water

provision must be made for replacing water loss from the system, either:

– from a manually filled make-up vessel with a readily visible water level. The vessel should be mounted at least 150 mm (6") above the highest point of the system, and be connected through a non-return valve to the system, filled at least 300 mm (12") below the make-up vessel on the return side of the domestic hot water cylinder or radiators.

or

– where access to a make-up vessel would be difficult by pre-pressurisation of the system. Refer to "Filling", below.

7. Mains Connection

There must be no direct connection to the mains water supply or to the water storage tank supplying domestic water, even through a non-return valve, without the approval of the local water authority.

8. Filling

The system may be filled by one of the following methods:

a. Through a cistern, used for no other purpose, via a ball valve permanently connected directly to a service pipe and/or a cold water distributing pipe. The static head available from the cistern should be adequate to provide the desired initial system design pressure. The cold feed pipe from the cistern should include a non-return valve and a stop valve with an automatic air vent connected between them, the stop valve being located between the system and the automatic air vent. The stop valve may remain open during normal operation of the system if automatic water make-up is required.

b. Through a self-contained unit comprising a cistern, pressure booster pump (if required) and, if necessary, an automatic pressure reducing valve and flow restrictor. The cistern should be supplied through a temporary connection from a service pipe or cold water distributing pipe. This unit may remain permanently connected to the heating system to provide limited automatic water make-up. Where the temporary connection is supplied from a service pipe or distributing pipe which also supplies other draw-off points at a lower level then a double check valve shall be installed upstream of the draw-off point.

c. Through a temporary hose connection from a draw-off tap supplied from a servicing pipe under mains pressure. Where the mains pressure is excessive a pressure reducing valve shall be used to facilitate filling.

The following fittings shall form a permanent part of the system and shall be fitted in the order stated:

- A stop valve complying with the requirements of **BS. 1010, Part 2** (the hose from the draw-off tap shall be connected to this fitting);
- A test cock;
- A double check valve of an approved type.

- Thoroughly flush out the whole of the system with cold water, without the pump in position.
- With the pump filled, fill and vent the system until the pressure gauge registers 1.5 bar (21.5 lb/in^2). Examine for leaks.
- Check the operation of the safety valve by manually raising the water pressure until the valve lifts. This should occur within ± 0.3 bar (4.3 lb/in^2) of the preset lift pressure.
- Release water from the system until the initial system design pressure is reached.
- Light the boiler and heat the system to the maximum working temperature. Examine for leaks.
- Turn off the boiler and drain the system while still hot.
- Refill and vent the system.
- Adjust the initial pressure to the required valve.

Sizing procedure for expansion vessel

The volume of the expansion vessel (litres) fitted to a sealed system shall not be less than that given by the table below, multiplied by a factor of 0.8 (for flow temperatures of less than 80 °C).

Safety valve setting	**3.0 bar**			**2.5 bar**			**2.0 bar**	
Vessel charge and initial system pressure	0.5 bar	1.0 bar	1.5 bar	0.5 bar	1.0 bar	1.5 bar	0.5 bar	1.0 bar
Total water content of system (litres)	**Expansion vessel volume litres**							
25	2.1	2.7	3.9	2.3	3.3	5.9	2.8	5.0
50	4.2	5.4	7.8	4.7	6.7	11.8	5.6	10.0
75	6.3	8.2	11.7	7.0	10.0	17.7	8.4	15.0
100	8.3	10.9	15.6	9.4	13.4	23.7	11.3	20.0
125	10.4	13.6	19.5	11.7	16.7	29.6	14.1	25.0
150	12.5	16.3	23.4	14.1	20.1	35.5	16.9	30.0
175	14.6	19.1	27.3	16.4	23.4	41.4	19.7	35.0
200	16.7	21.8	31.2	18.8	26.8	47.4	22.6	40.0
225	18.7	24.5	35.1	21.1	30.1	53.3	25.4	45.0
250	20.8	27.2	39.0	23.5	33.5	59.2	28.2	50.0
275	22.9	30.0	42.9	25.8	36.8	65.1	31.0	55.0
300	25.0	32.7	46.8	28.2	40.2	71.1	33.9	60.0
Multiplying factors for other system volumes	0.0833	0.109	0.156	0.094	0.134	0.237	0.113	0.20

Table 1 Expansion vessel volumes

1 Installation

1.1 Dimensions and connections

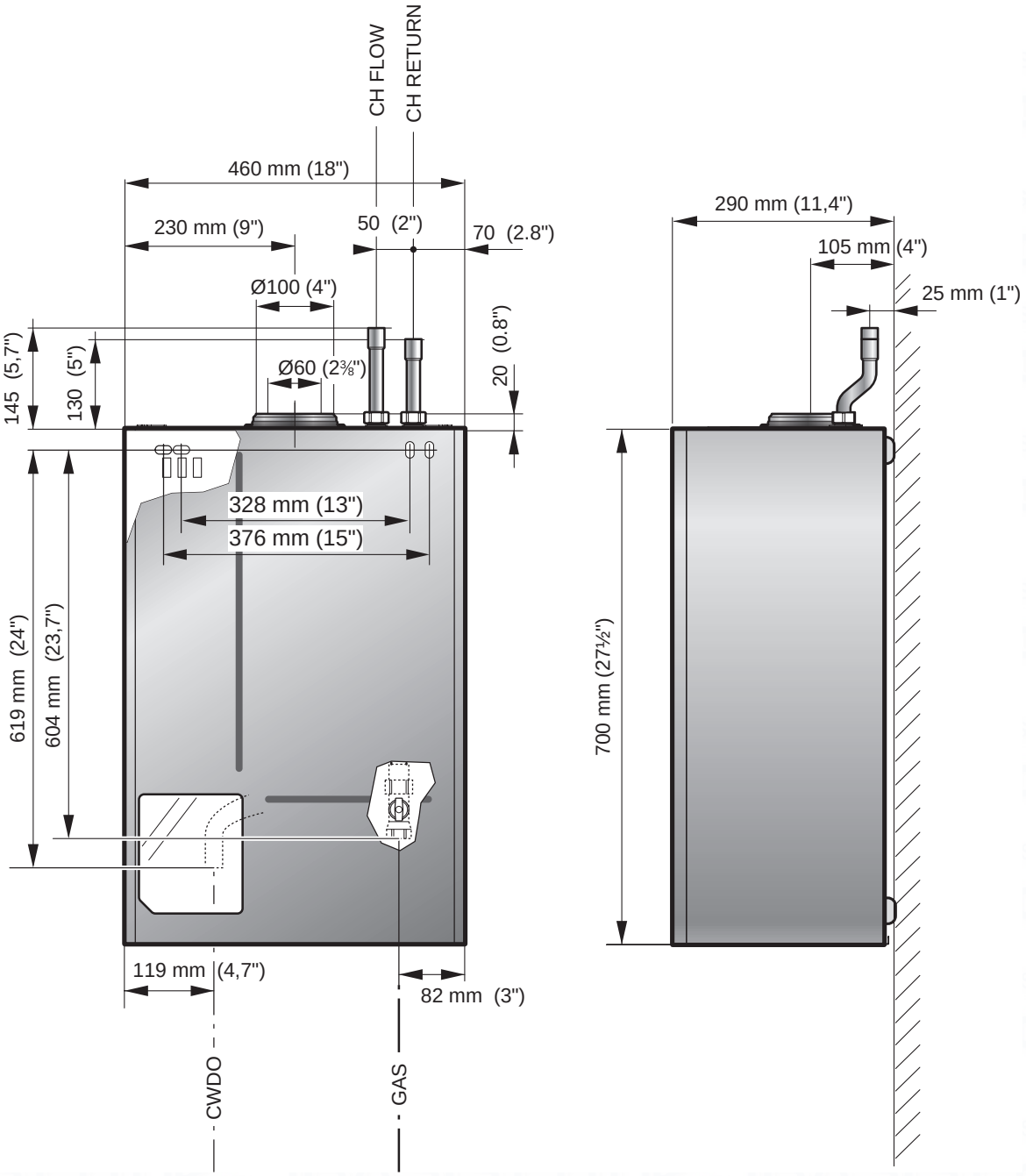

CH Flow	=	Ø22 mm Compression (0.87")
CH return	=	Ø22 mm Compression (0.87")
GAS	=	Gas connection G½" INSIDE
CWDO	=	Condensate water drainage outlet Ø21.5 mm (0.8") OUTSIDE

NOTE
See the wall-mounting template for the necessary clearances.

1.2 Boiler assembly - exploded view

Single unit (11R / 19R / 24R)

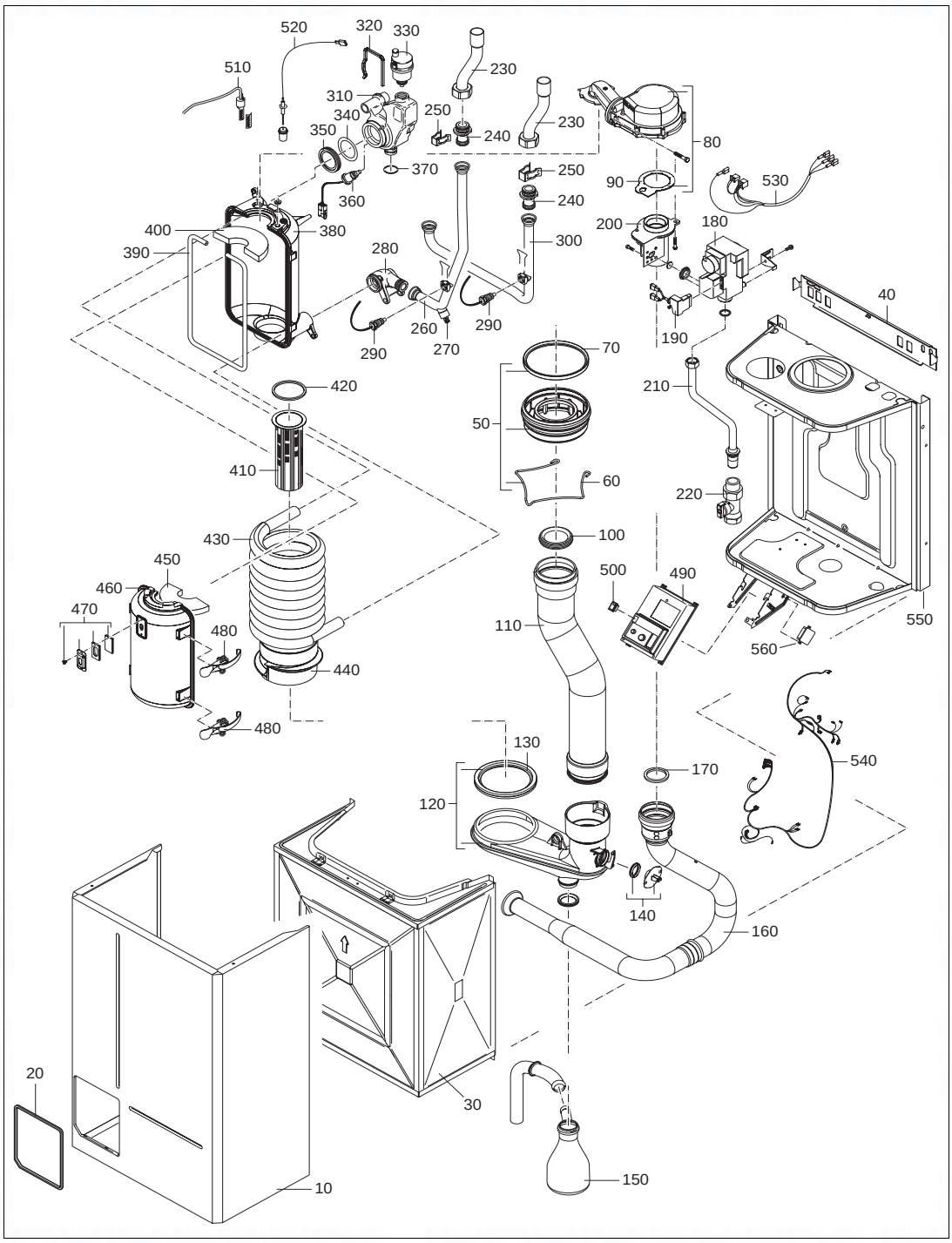

Legend

10. Casing
20. Door complete
30. Ventilation cover
40. Bracket
50. Concentric adaptor
60. Clip adaptor
70. Lipring 100mm
80. Fan
90. Sealing Fan / Venturi
100. Lipring 60mm
110. Flue gas pipe
120. Condensate collector
130. Seal flue gas pipe
140. Flue gas sensor
150. Condensate trap
160. Suction pipe
170. Lipring 50mm
180. Gas valve
190. Rectifier
200. Venturi
210. Gas pipe
220. Gas service valve
230. Pipe return/flow top
240. Pipe connection
250. Clip
260. Return pipe
270. Drain cock
280. Connection return
290. Sensor
300. Flow pipe
310. Connection supply
320. Hairpin heat exchanger
330. Automatic air vent
340. O-ring
350. Lipring
360. Safety sensor
370. Sealing ring
380. Backpart heat exchanger
390. Seal heat exchanger
400. Insulation backpart heat exchanger
410. Burner 11 kW
Burner 19 kW
Burner 24 kW

420. Sealing burner
430. Heat exchanger helix
440. Combustion divider
450. Insulation front heat exchanger
460. Frontpart heat exchanger
470. Sight glass
480. Fasteners
490. UBA
500. Main switch
510. Hot surface ignitor
520. Ionisation electrode
530. Cable fan
540. Cable harness
550. Frame
560. RTH converter 230V

1.3 Flue Installation

1.3.1 Siting the flue terminal

The flue must be installed in accordance with the recommendations of **BS. 5440-1:2000**.

Pluming will occur at the terminal so terminal positions where this could cause a nuisance should be avoided.

The air supply and the flue gas exhaust must meet the applicable general regulations. Please consult the instructions provided with the flue terminal kits prior to installation.

The boiler MUST be installed so that the terminal is exposed to external air.

It is important that the position of the terminal allows the free passage of air at all times.

Minimum acceptable spacing from the terminal to obstructions and ventilation openings are specified in table 1.

If the terminal is fitted within 1000 mm of a plastic or painted gutter or within 500 mm of painted eaves, an aluminium shield of at least 1000 mm long should be fitted to the underside of the gutter or painted surface.

If the lowest part of the terminal is less than 2 metres above the level of the ground, balcony, flat roof or place to which any person has access, the terminal must be protected by a guard. Protective guards are available from Quinnell Barrett and Quinnell, Old Kent Road, London.

Ensure that the guard is fitted centrally.

The flue assembly shall be so placed or shielded as to prevent ignition or damage to any part of the building.

The air inlet/products outlet duct and the terminal of the boiler MUST NOT be closer than 25 mm (1") to combustible material. Detailed recommendations on the protection of combustible material are given in **BS. 5440 - 1:2000**.

NOTE
It is absolutely essential to ensure, in practice, that products of combustion discharging from the terminal cannot re-enter the building or any other adjacent building through ventilators, windows, doors, other sources of natural air infiltration, or forced ventilation/airconditioning.

If this could occur the appliance MUST be turned off (with the owners permission), and labelled as unsafe until corrective action can be taken.

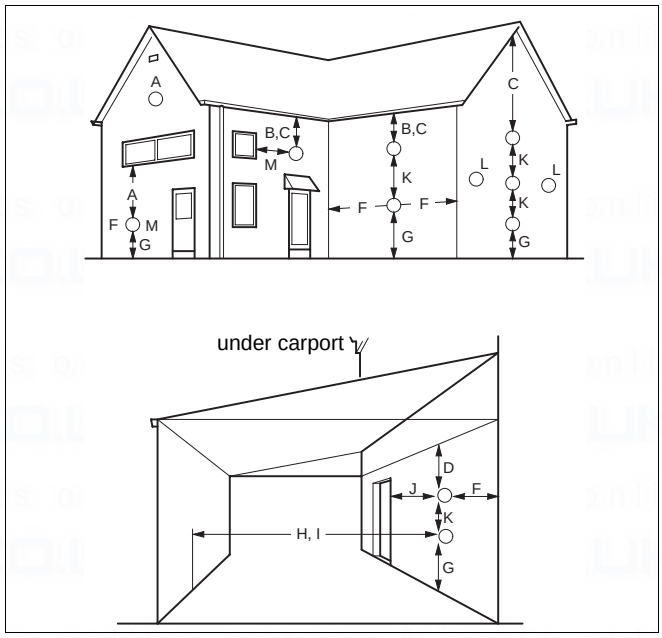

Fig. 1 Flue terminal position

Terminal Position	Minimum Spacing
A. Directly below or alongside an opening window, air vent or other ventilation opening	300 mm (12")
B. Below guttering, drain pipes or soil pipes	75 mm (3")
C. Below eaves	200 mm (8")
D. Below balconies or a car port roof	200 mm (8")
E. From vertical drain pipes or soil pipes	150 mm (6")
F. From internal or external corners	300 mm (12")
G. Above adjacent ground, roof or balcony level	300 mm (12")
H. From a surface facing the terminal	600 mm (24")
I. From a terminal facing a terminal	1200 mm (48")
J. From an opening in a car port (e.g. door or window) into dwelling	1200 mm (48")
K. Vertically from a terminal on the same wall	1500 mm (60")
L. Horizontally from a terminal on the wall	300 mm (12")
M. Adjacent to opening	300 mm (12")

Table 1 Balanced flue terminal position

1.3.2 Air supply and flue gas exhaust in a closed installation

A ventilation cover is integrated into the 600 Series condensing gas boilers. This cover houses a number of components, such as the burner and the heat exchanger. Since this ventilation cover is part of the air supply system, it is vital that it is always installed correctly.

To ensure optimal operation, the 600 Series appliances must be connected to a Buderus wall-mounted or roof-mounted flue terminal. These terminals have been developed specifically for the 600 Series condensing gas boilers and have been comprehensively tested. The Buderus wall and roof-mounted flue terminal kits ensure trouble-free operation.

The following items for the flue (see fig. 2) are included in the delivery of the boiler:

– pos. 1: 1 Concentric bend 60/100;

– pos. 2: 1 Horizontal flue terminal 60/100;

– pos. 3: 1 Flue finishing kit.

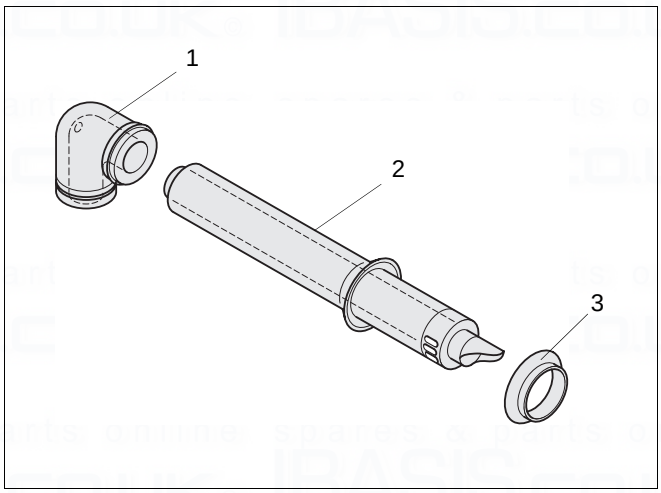

Fig. 2 Horizontal flue pack

1.3.3 Maximum Flue length

The maximum pipe length of the air supply and flue gas exhaust pipes for the 600 Series condensing gas boilers (see table 2) is determined by the total pressure loss of all components in the flue gas exhaust / air supply system.

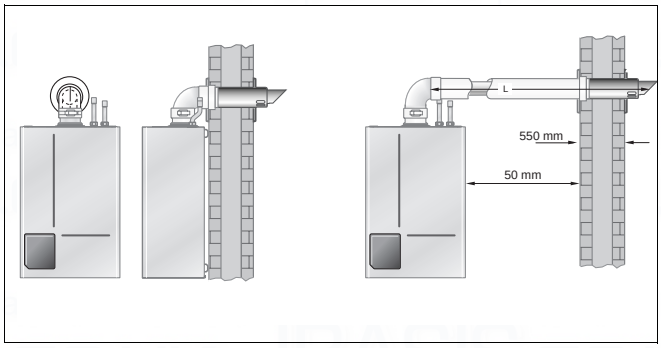

Fig. 3 Side flue and rear flue installation

Take the flue conduit clearances into account when planning the layout of the place of installation (see subsection 1.3.1: "Siting the flue terminal" on page 11).

Maximum wall thickness without extensions is 550 mm. Maintain a minimum side wall clearance of 50 mm (see fig. 3).

Boiler	Maximum pipe length	For every 90° bend the maximum pipe length has to be reduced by
600 Series	L = 7.5 m	1.2 m

Table 2 Pipe length

1.3.4 Additional flue parts

Additional flue parts (see table 3) can be ordered from your supplier.

Flue parts	Order No.
Concentric pipe, 500 mm long, adjustable	NE 83703
Concentric pipe, 1000 mm long, not adjustable	NE 83704
Concentric bend 90°	NE 83705
Concentric bend 45°	NE 83706

Table 3 Additional flue parts

1.4 Items supplied with unit

- Check the contents against the packing list to ensure that nothing is missing.

Key to fig. 4:

1: *Wall-mounted condensing gas boiler*

2: *Wall bracket*

3: *Technical documents*

4: *CH Flow connection pipe*

5: *CH Return connection pipe*

6: *Gas service valve*

7: *Plastic bag containing the following accessories:*
2 x wall fixing-screws
2 x wall plugs
2 x washers
Seals (2 x ¾")
Square wrench
Initial start-up sticker
Second identification plate

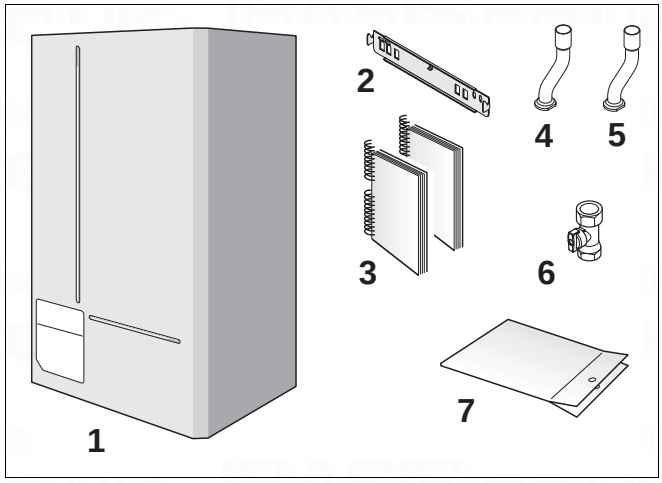

Fig. 4 Items supplied with unit

Requirements to be met by the place of installation

NOTE
Observe all statutory building regulations applying to the place of installation.

DANGER!
Inflammable materials or liquids must not be stored or used near wall-mounted condensing gas boilers. The site of installation must be frost-protected.

1.5 Transport

The boiler is transported in a horizontal position.

- Open the box and remove the four foam supports (fig. 5, item 1). The casing is not attached to the boiler.
- Take out the casing (fig. 5, item 2) and put aside during installation.

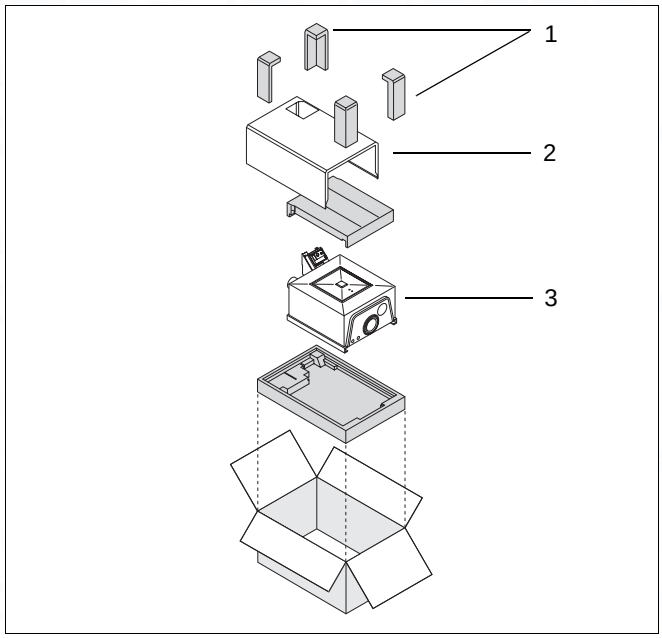

Fig. 5 Unpacking the box

CAUTION!
Do not carry the boiler by the casing at any time.

- Take out the wall bracket (fig. 4, item 2) and attach to the wall using the wall mounting template.
- Take out the condensing gas boiler (fig. 5, item 3) and hang onto the wall bracket (fig. 6).
- Dispose of packaging.

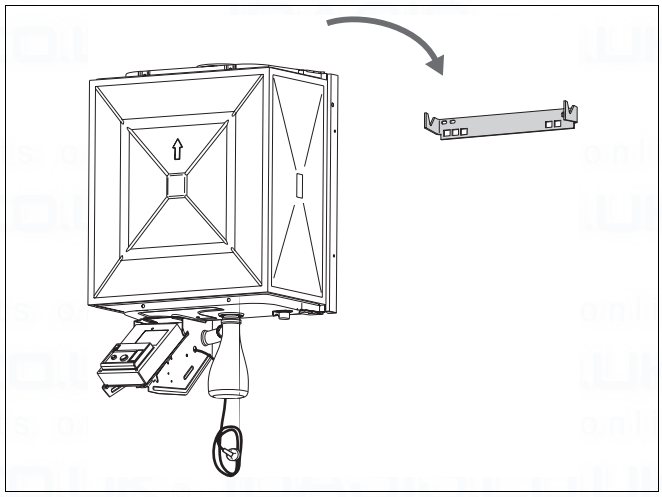

Fig. 6 Installation

1.6 Pipe connections

CAUTION!
Ensure that all pipework is routed so as to minimise any strain on the boiler fittings.

1.6.1 Gas Supply

The gas installation must be installed in accordance with **BS.6891**.

CAUTION!
Pipework from the meter to the boiler MUST be of adequate size.

The complete installation MUST be tested for gas tightness and purged as described in **IGE/UP/1b**.

1.6.2 Gas connection

- A gas service valve is supplied with the unit. Take it out of the box and connect it to the boiler see fig. 7, item 3 with P.T.F.E.-tape. Connect to gas supply according to the relevant standards.

1.6.3 Heating system connections

The central heating system should be in accordance with **BS.6798** and, in addition, for smallbore and microbore systems, **BS.5449**.

- Take the CH flow connection pipe and the CH return connection pipe out of the box and connect to the condensing gas boiler see fig. 7, item 1 and 2.
- Connect the central heating system to these pipe connections according to the relevant standards.

1.6.4 Condensate drain

A condensate drain is integrated in the boiler. The drain outlet is a standard (21.5 mm) overflow pipe. This drain needs to be connected to a drainage point. All pipework and fittings in the condensate drainage system MUST be made of plastic - no other materials may be used.

The routing of the drain must be made to allow a minimum fall of 1 in 20 away from the boiler, throughtout its length.

Excessive external pipe runs should be avoided in order to prevent possible freezing.

Any external pipework should be a minimum of 32 mm internal diameter.

WARNING!
Any external run must be insulated.

Ensure that the condensate trap is filled with water.

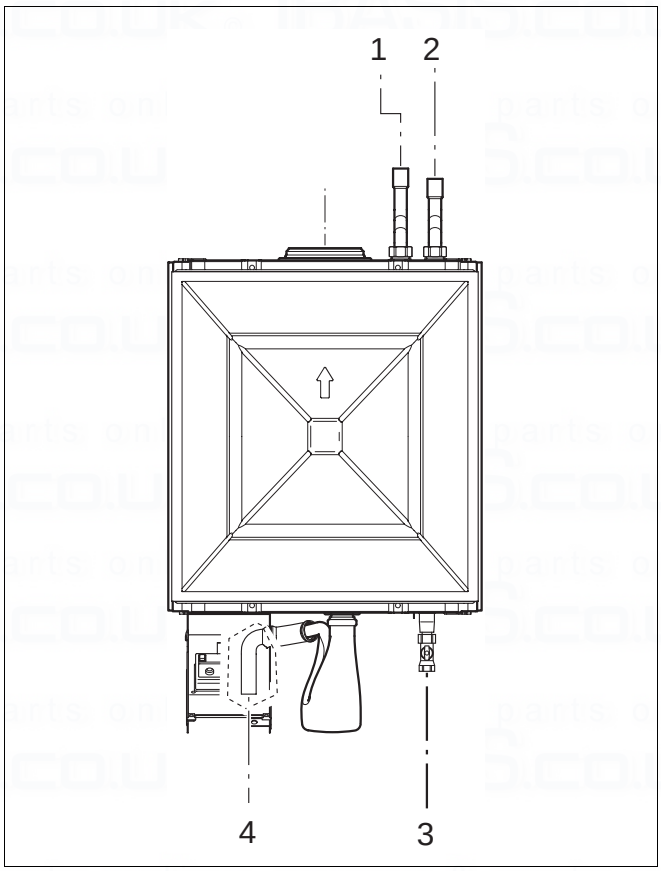

Fig. 7 Pipe connections

Key to fig. 7:

1: *CH flow*

2: *CH return*

3: *Gas*

4: *Condensate water drainage outlet (CWDO)*

1.7 Flue installation

The only flue systems that may be used are those supplied by Boulter Buderus. The flue system must be installed in accordance with the requirements of **BS.5440:1. 2000**.

Standard 100 mm flue systems

The standard concentric flue system provides for a max. horizontal straight length of upto 7.5 m (see subsection 1.3.3). Full instructions for fitting this flue are in subsection 1.7.2: "Installation of the horizontal flue" on page 15.

IMPORTANT
Any horizontal flue system fitted to a condensing boiler must be inclined towards the appliance at an angle of 3% (30 mm per metre length) to prevent condensate dripping from the flue terminal.
This means that the clearance above the appliance must be increased to match the duct length. See figure on page 9.

1.7.1 Connecting the vertical flue gas duct

- Fit the vertical flue gas duct (fig. 8) onto the appliance flue connector.
- For remaining installation of the vertical flue assembly, refer to the relevant installation instructions.

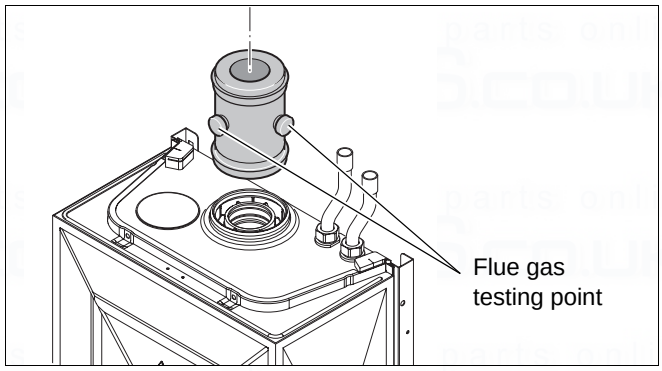

Fig. 8 Vertical flue connection

1.7.2 Installation of the horizontal flue

The standard 100 mm diameter horizontal flue system is siutable for lengths upto 560 mm (see fig. 10).
For longer flue runs upto 7.5 m, extension air/flue ducts are available (see page 12, table 3).

NOTE
Use the wall-mounting template to help you mark the position of the side flue opening

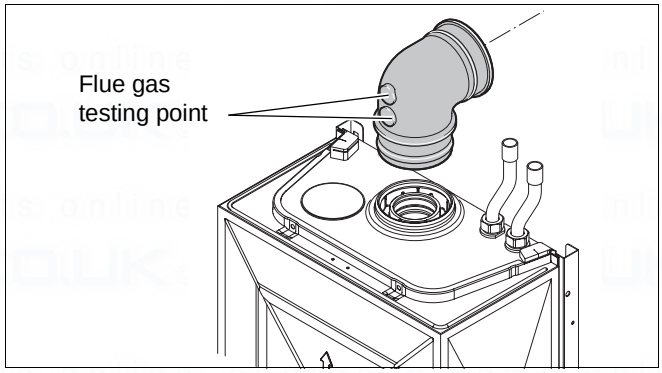

Fig. 9 Elbow with flue gas testing point

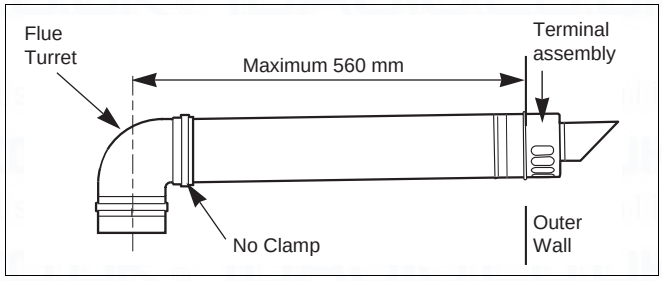

Fig. 10 Standard flue

1.7.3 Flue duct preparation and assembly

- Measure the flue length L. Refer to figures 11 and 12.

NOTE
The flue must be inclined to the boiler.

- Mark of the lengths shown onto the ducts and cut the length. The cuts must be square and free from burrs. Terminal assembly outer (air) duct - L-70 mm, inner (flue) duct - L-50 mm. The measurement is made from the ridge at the terminal indicating the outer face of the wall. Refer to figure 13.
  Extension air duct - L-70 mm, flue duct - L-50 mm. The measurement is from the formed end.

- Assemble flue system completely. Push the ducts fully together. The slope of the terminal outlet must be face downwards.
  The assembly will be made easier if a solvent free grease is lightly applied to the male end of the ducts.

NOTE
An inner wall sealing plate is provided which should be fitted to the ducts before assembly.

- Push the assembly through the wall and slide the turret onto the flue connector. Refer to figure 9.
- Ensure that the turret is fully entered into the socket on the boiler. From the outside fix the flue finishing kit to the terminal and, after ensuring the duct is properly inclined towards the boiler, fix the finishing kit to the wall.
  If the terminal is within 2 m of the ground where there is access then an approved terminal guard must be fitted. The guard must give a clearance of at least 50 mm around the terminal and be fixed with corrosion resistant screws.

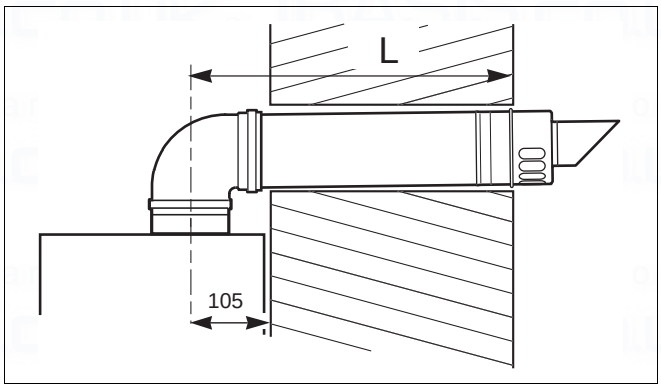

Fig. 11 Flue length - rear

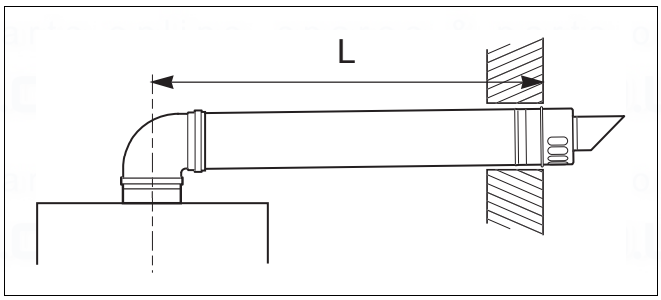

Fig. 12 Flue length - side

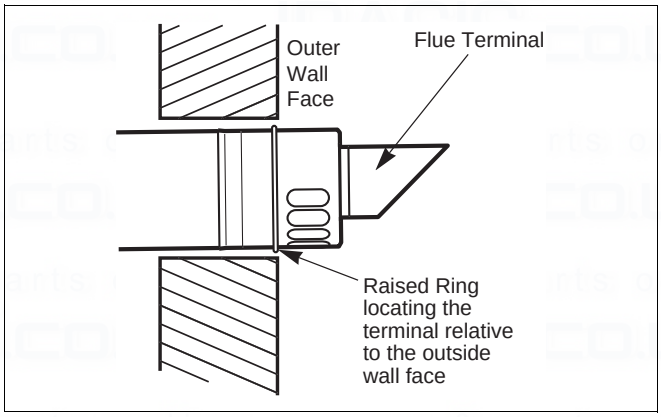

Fig. 13 Flue terminal position

1.8 Electrical connections

1.8.1 Mains connection

CAUTION
This appliance MUST be earthed.

A mains supply of 230 V - 50Hz is required.

External controls are suitable for volt free or 230 V installation.

Wiring to the boiler MUST be in accordance with the current I.E.E. (**BS.7671**) Wiring Regulations and any local regulations.

Wiring should be a 3 core PVC insulated cable, not less than 0.75 mm^2 (24 x 0.2 mm), and to **BS.6500 Table 16**.

Connection must be made in a way that allows complete isolation of the electrical supply such as a double pole switch having 3 mm (1/8") contact seperation in both poles, or a plug and socket, serving only the boiler and system controls. This boiler is equipped with a double pole switch see fig. 14, item 1. The means of isolation must be accessible to the user after installation.

The electrical connection to the mains supply should be readily accessible and adjacent to the boiler.

If the supply cord is damaged, it must be replaced by a registered Corgi installer to avoid a hazard.

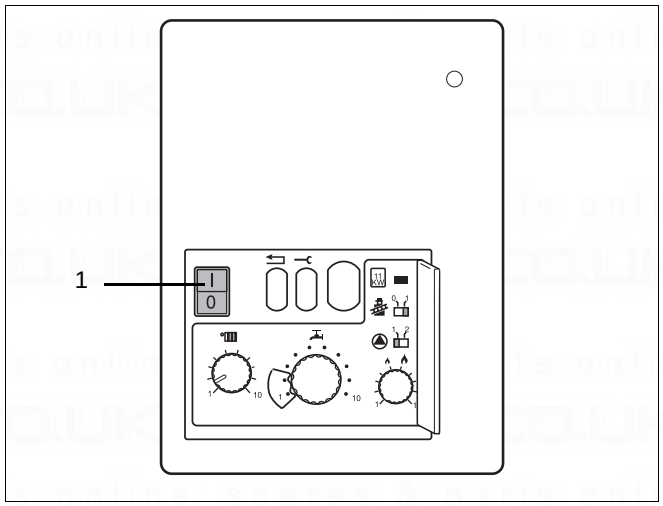

Fig. 14 UBA

1.8.2 Wiring Diagram

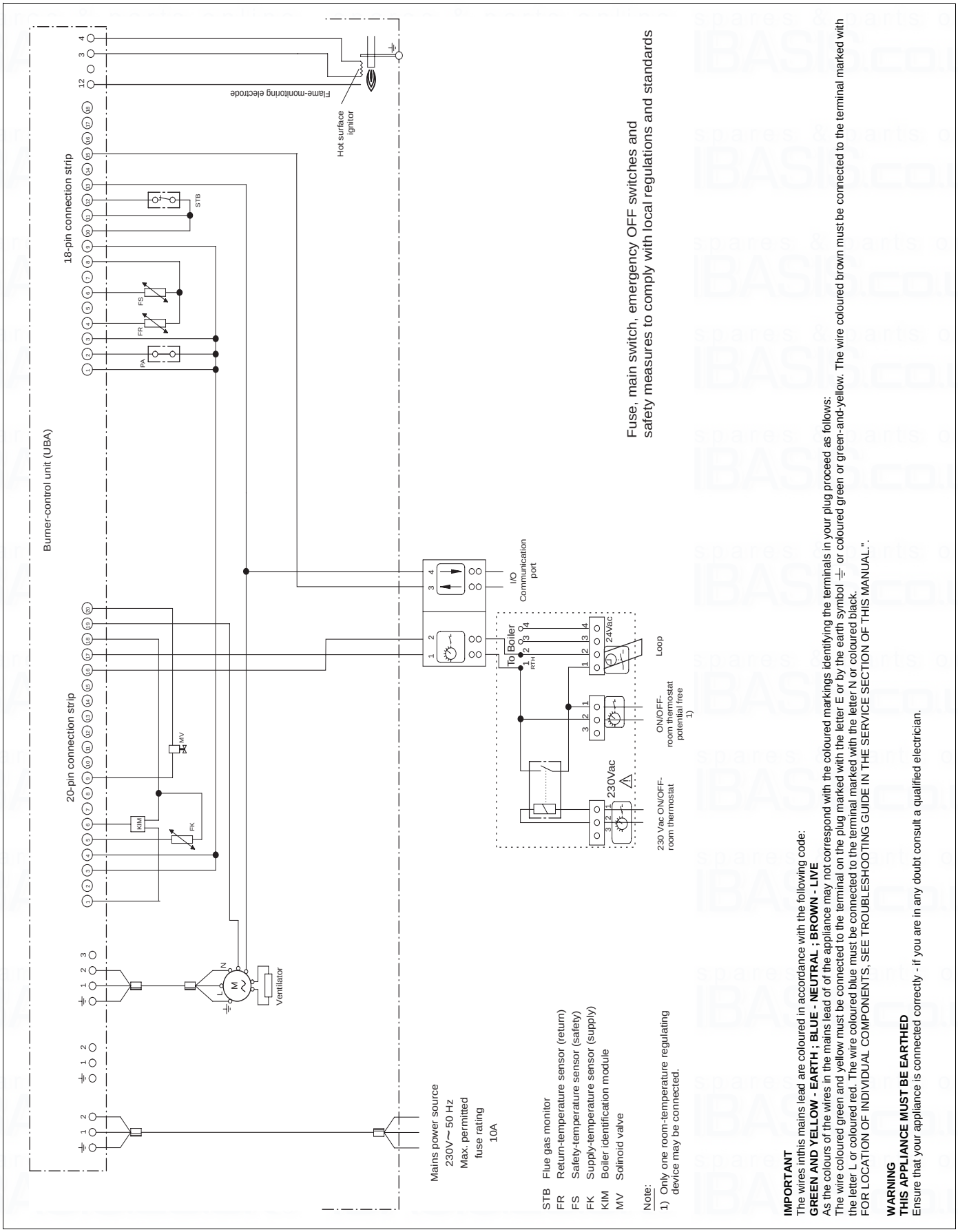

1.9 Timing and temperature control

The wall-mounted condensing gas boiler can be fitted with the following control devices:

– ON/OFF temperature controller, volt free;

– A room-temperature control device at 230V connected to the RTH converter see fig. 15, item 2.

1.9.1 230V Room-temperature control device connection

CAUTION
DO NOT activate the condensing gas boiler at this stage.

- Lead the 230V control device wire through the cable lead (see fig. 15, item 1).
- Fix the 230V wire to position 1 and 2 of the 230V connection (see fig. 15, item 2).
- Secure the 230V wire with the bracket and the two screws onto the RTH converter.

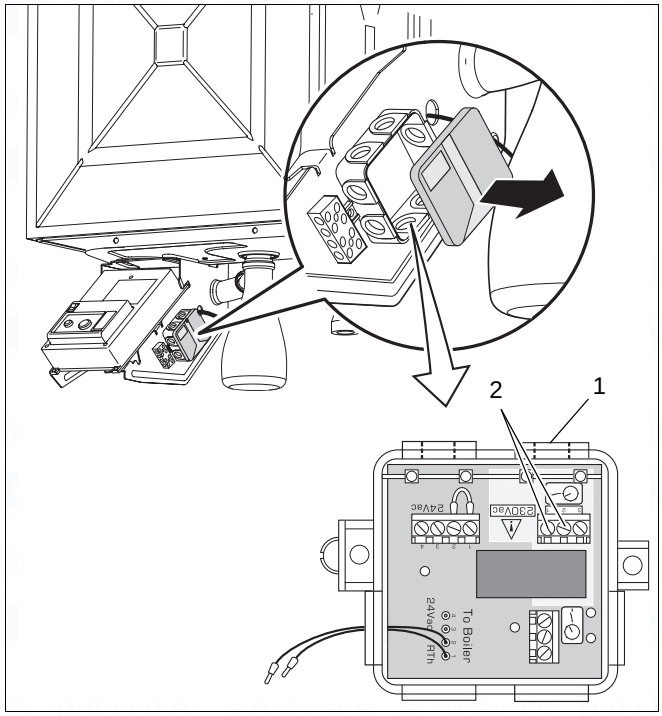

Fig. 15 Connecting the control device

1.9.2 Volt free room-temperature control device connection

- Remove the cover of the connextion box (fig. 16, item 1).
- Lead the control device wire through the cable lead (see fig. 16, item 2).
- Fix the wire to position 1 and 2 of the volt free connection (see fig. 16, item 3).
- Secure the wire with the bracket and the two screws onto the RTH converter (see fig. 16, item 4).

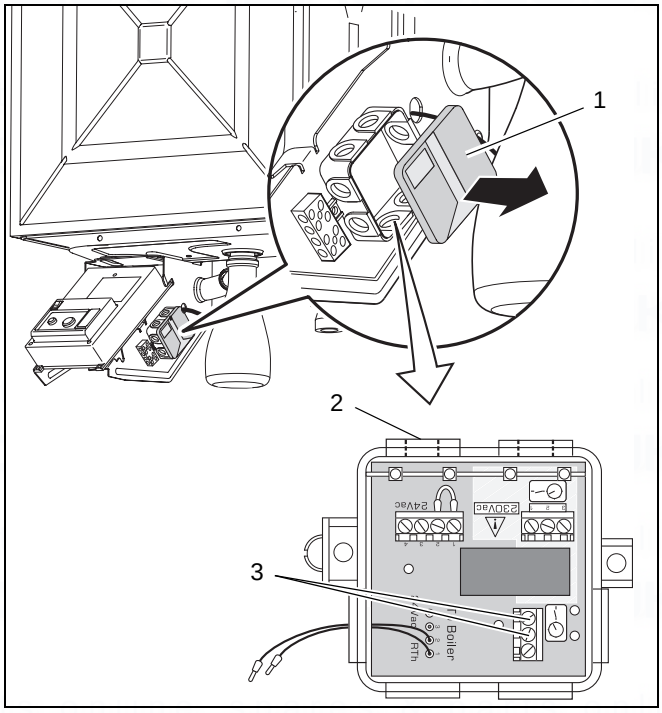

Fig. 16 RTH converter - Volt free connection

2 Initial start-up

2.1 Preparing the boiler for operation

CAUTION
DO NOT operate the condensing gas boiler if large amounts of dust are present, e.g. due to building work in and around the place of installation.

2.1.1 Checking for leaks

- Disconnect the system from the power supply.
- Check all sections of gas pipework and connections for signs of leaks before starting up system for the first time. If a leak is detected during tightness testing, use an approved leak detector to check all connections for possible escapes. The product must be certified as a gas leak-testing agent. DO NOT allow the product to come into contact with electrical wiring.

2.1.2 Purging air from the gas supply system

- Loosen the 4 crosshead screws on the ventilation cover (fig. 17).
- Remove the ventilation cover.
- Close the gas service valve.
- Unscrew the sealing closure of the gas connection-pressure testing nipple by two turns (fig. 18).
- Purge system and appliance as per relevent procedures, **IGE/UP/1b**. Ensuring all safety requirments are met.
- Open gas service valve.
- Close the gas service valve once more.
- Shut the sealing closure of the test nipple once more.
- Open cover for 2nd operating level (fig. 19, item 1).
- Make sure that system pump is running.
- Start boiler up and move chimney sweep switch (fig. 19, item 3) to position “**1**”.

The display shows (fig. 19, item 2) “ ‾.” or “ =.” to indicate that the gas supply system is purged of air. Return chimney sweep switch to position “**0**”.

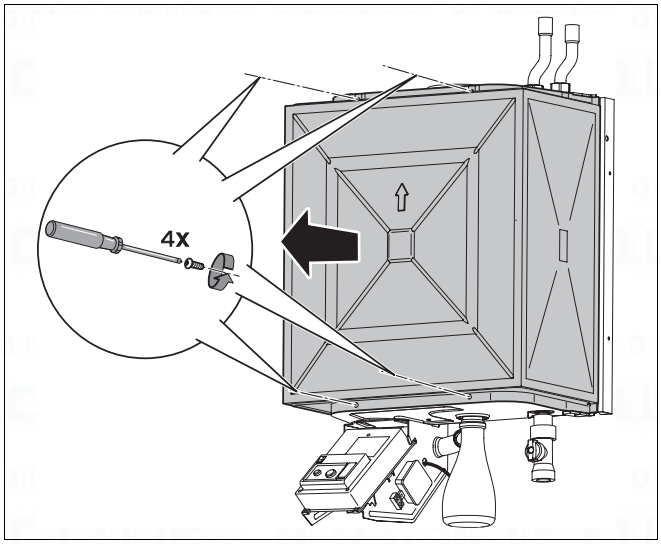

Fig. 17 Unscrew ventilation cover

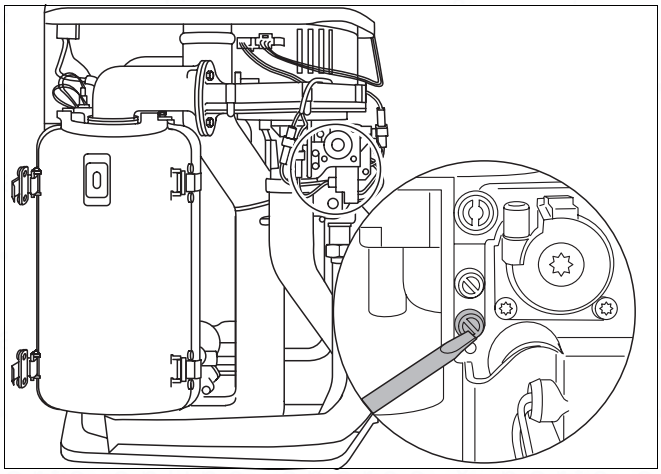

Fig. 18 Purging air from the gas supply system

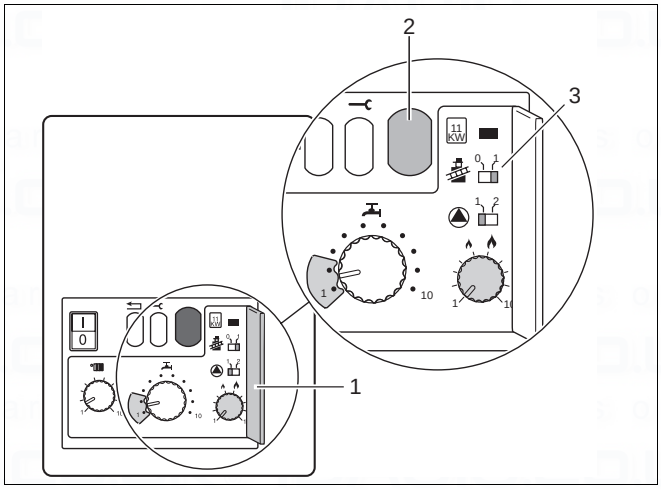

Fig. 19 Display and chimney-sweep switch

2.1.3 Check combustion air/flue gas connection

Check to ensure that the correct combustion air/flue gas system has been fitted.

Check that the instructions included in the appropriate flue gas system installation manual have been followed.

Type of gas	Factory settings of gas burners
Natural gas **H**	When delivered ready for operation and set to Wobbe index 14.1 kWh/m^3 (referred to 15 °C, 1,013 mbar), applicable for Wobbe index range 11.3 to 15.2 kWh/m^3. Inscription on gas-type indicating label: Category setting: G 20 - 2E_20 mbar
Propane **P**	After adaptation by a CORGI registered installer, the unit can be run on propane. Inscription on gas-type indicating label: 3P G 31_30-50 mbar

Table 4 Gas-supply types

2.1.4 Checking the type of gas and supply

CAUTION
The burner must only be put into operation with the correct nozzles (table 5).

Type of gas supply	Gas nozzles ∅ [mm]		Venturi tubes
	11R	19R/24R	
Natural gas **H** (G20)	5.55	6.5	Standard
Propane **P**	3.40	4.15	Standard

Table 5 Gas-nozzle diameter

NOTE
Observe stickers attached to Venturi tubes.

Controller setting	Flow temperature [°C]
1	40
2	44
3	48
4	53
5	58
6	62
7	67
8	71
9	76
10	80

Table 6 Flow temperature

2.1.5 Adjusting the flow temperature

- Open the cover to the 2nd operating level (fig. 20, item 1).
- Adjust the knob (fig. 20, item 2) to the desired flow temperature (table 6) for your particular installation.

NOTE
Factory setting of the controller is "**10**" (around 83 °C).

NOTE
If the flow temperature is set too low, there is the risc that an external hot water cylinder cannot achieve a comfortable enough temperature.

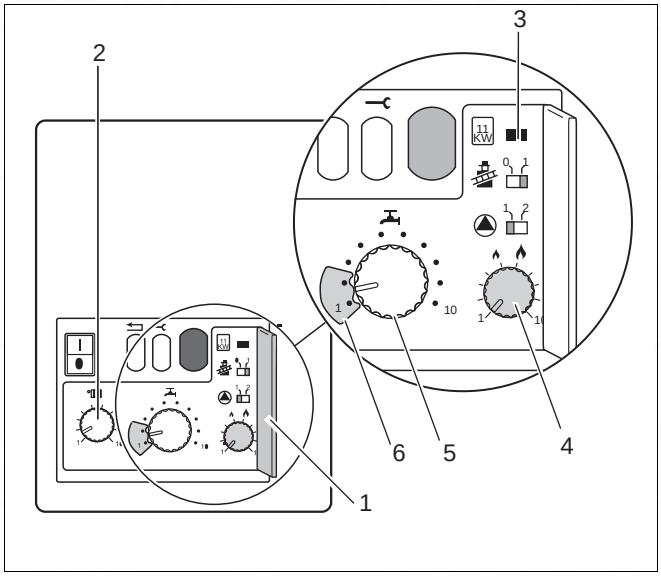

Fig. 20 Control box

Key to Fig. 20:

1: *Cover for second operating level*

2: *Flow temperature knob*

3: *Heat-capacity jumper*

4: *Heating capacity knob*

5: *only used when boiler is in service mode*

6: *only used when boiler is in service mode*

2.1.6 Setting the heating capacity

Set the heating capacity (table 7), according to the amount of heat required, at the controller (fig. 20, item 4).

NOTE
The controller is factory-adjusted to position "**6**"

Controller setting	Heating capacity [kW] (±5 %)		
	11 R	19 R	24 R
1	4.9	9.7	9.7
2	5.6	10.7	11.3
3	6.3	11.8	12.9
4	6.9	12.8	14.5
5	7.6	13.8	16.0
6	8.3	14.9	17.6
7	9.0	15.9	19.2
8	9.6	16.9	20.8
9	10.3	18.0	22.4
10	11.0	19.0	24.0

Table 7 Heating capacity

2.1.7 Measure gas-supply pressure (flow pressure)

- Open at least one radiator thermostat valve.

CAUTION
The condensing gas boiler must not be activated at this stage.

- Make sure that the system pump is running.
- Turn the chimney-sweep switch (fig. 21, item 4) to position “**1**”.
- Loosen the screw plug on the gas test nipple (fig. 22) by two turns.
- Attach the pressure-gauge connection hose to the gas test nipple (fig. 23).
- Slowly open the gas service valve.
- Turn the power switch (fig. 21, item 2) to position “**I**”. The burner should ignite after about 30 seconds.
- Measure the gas connection pressure and note it down on the report form.

  The gas-connection pressure must be
  for **natural gas H** min. 17 mbar, max. 25 mbar, nominal connection pressure 20 mbar.
  for **propane P** min. 30 mbar, max. 50 mbar, nominal connection pressure 37 mbar.
- Detach the gauge-connection tube once more and close the test nipple at the screw plug.

NOTE
If the required connection pressure is not available or too high, contact your gas supplier or TRANSCO.

Ensure all disturbed joints and connections are checked for gas tightness on completion of tasks.

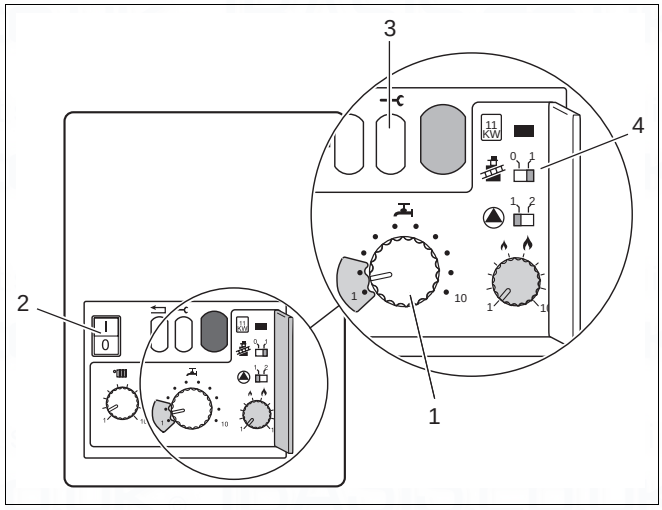

Fig. 21 Mains switch, service button and chimney-sweep switch

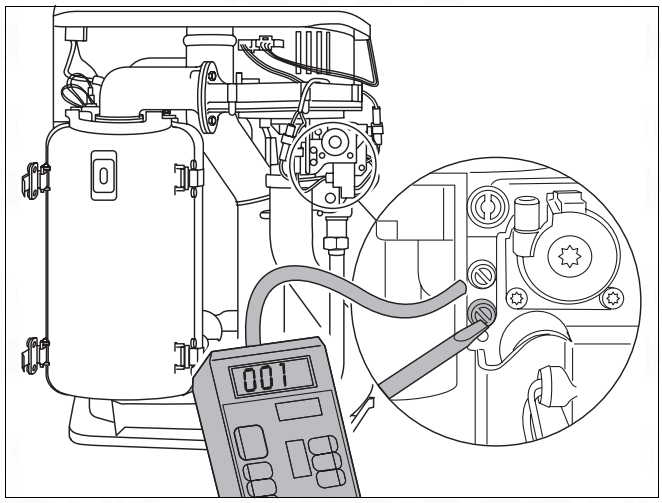

Fig. 22 Measure the gas connection pressure

2.1.8 Check the gas/air ratio and adjust as required

- Turn mains power switch (fig. 21, item 2) and chimney-sweep switch (fig. 21, item 4) to “**0**”.
- Unscrew the sealing closure of the burner-pressure testing nipple by one turn (fig. 22).
- Connect the positive port of the pressure gauge with a hose to the burner pressure measuring nipple (fig. 23).
- Make sure that the system pump is running.
- Turn mains power switch to “**I**” and chimney-sweep switch to “**1**”.
- If the burner has fired after approx. 30 seconds, keep the service button (fig. 21, item 3) pressed until “**Y**” appears on the display.
- Turn the hot-water temperature controller (fig. 21, item 1) to “**1**”.
- Read the differential pressure.
  The differential pressure ($p_{GAS} - p_{AIR}$) should total -5 Pa (±5 Pa = 0,05 bar) (display on measuring gauge: -10 Pa to 0 Pa).

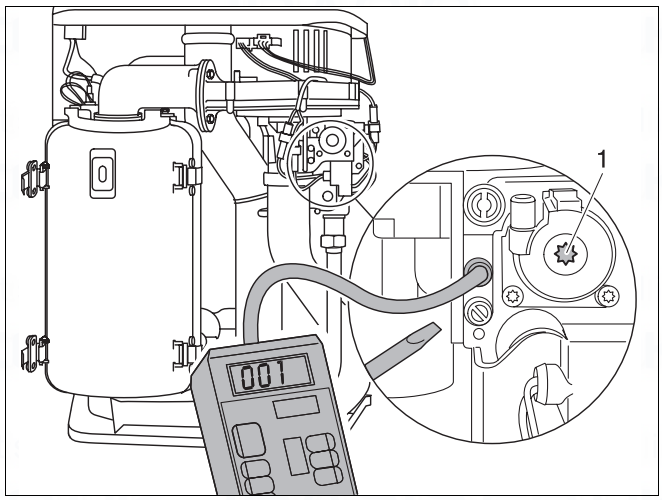

Fig. 23 Check the gas/air ratio

- If the gas/air ratio does not conform to specifications, readjust at the setscrew (fig. 23, item 1).
- Turn mains power switch and chimney-sweep switch to “**0**”.
- Remove the measuring equipment and retighten the screw in the burner-pressure measuring nipple.
- Readjust the hot-water temperature controller to its original setting.
- Turn the mains power switch to “**I**”.

2.1.9 Record readings

- Unscrew the corresponding sealing closure (fig. 24) on the connection adapter for the combustion-air/flue-gas system and replace it once the measuring operation in question has been carried out.

Carbon monoxide content

CAUTION
The carbon monoxide values under vacuum must be smaller than 400 ppm or 0.04 Vol%. Values around or exceeding 400 ppm indicate a faulty burner adjustment, a dirty gas burner or heat exchanger, or a defective burner. Ensure that the cause of the fault is remedied immediately.

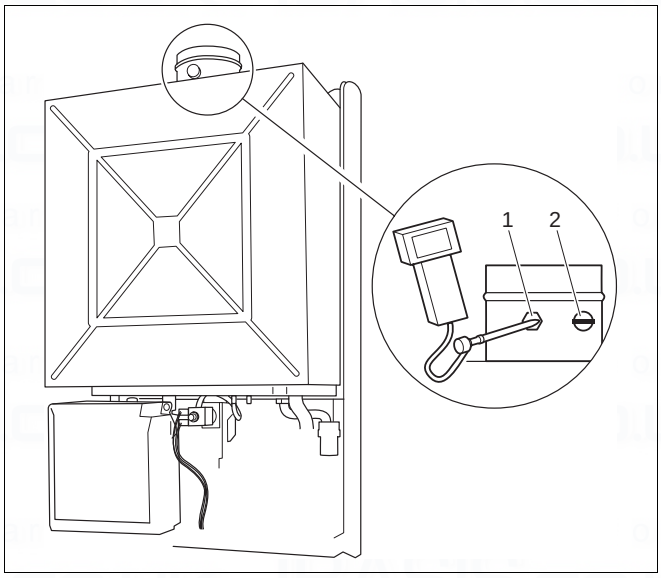

Fig. 24 Measuring points on exhaust conduit

Key to Fig. 24:

1: *Exhaust-fume temperature, CO_2, CO, NO_x*

2: *Combustion-air temperature*

2.1.10 Function testing

NOTE
During initial start-up and annual servicing, make sure that all control, regulating and safety devices are in full working order and, if applicable, check for correct adjustment.

Measuring the ionisation current (fig. 25)

- Disconnect the system from the power supply.
- Loosen the plug-and-socket connector of the ionisation electrode and connect the multimeter in series.
  On the measuring device, select the µ-direct current range. The measuring device must have a resolution of at least 1 µA.
- Make sure that the system pump is running.
- Reconnect the system to the power supply and turn the chimney-sweep switch to “**1**”.
- Measuring the ionisation current. The ionisation current being checked must measure >2 µA direct current.
- Enter the reading on the report form.
- Disconnect the system from the power supply.
- Remove multimeter and restore the plug-and-socket connection to its original state.
- Turn the chimney sweep switch to position “**0**”.
- Reconnect the system to the power supply.
  When the display shows “**7**” and the service button is pressed, the display turns to “**c**”. Press the Reset button. The display shows “**r**”.

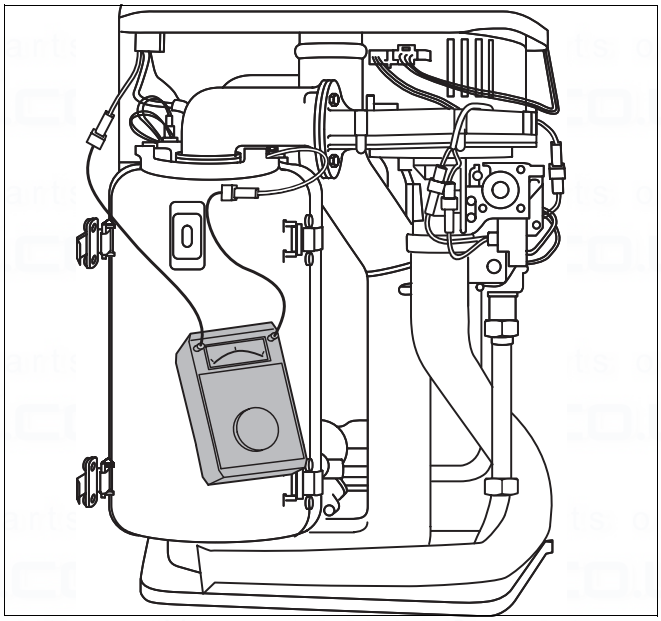

Fig. 25 Measuring the ionisation current

- Place the casing (see fig. 26, item 1).
- Tighten the fixing screw (see fig. 26, item 2).

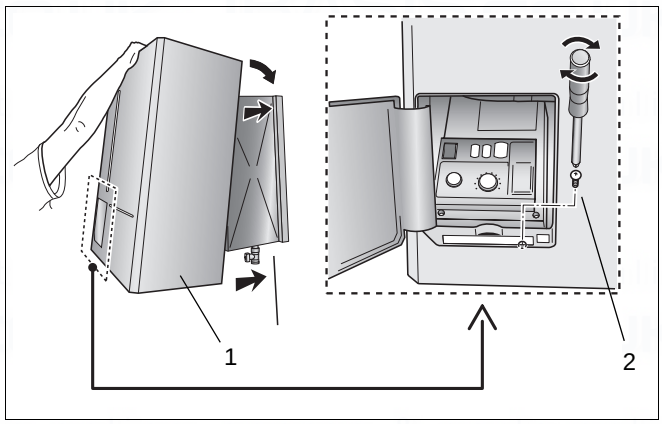

Fig. 26 Place casing

2.1.11 Handing over

After completing the installation and commissioning of the system the installer should hand over to the householder by the following actions:

- Hand the User Manual to the householder and explain his/her responsibilities under the relevant national regulations.
- Explain and demonstrate the lighting and shutting down procedures.
- The operation of the boiler and the use and adjustment of all system controls should be fully explained to the householder, to ensure the greatest possible fuel economy consistent with the household requirements of heating. Advise the user of the precautions necessary to prevent damage to the system and to the building in the event of the system remaining inoperative during frosty conditions.
- Explain the function and the use of the boiler heating controls.
- Explain the function of the boiler fault mode. Emphasise that if a fault is indicated, the boiler should be turned off and a registered local heating installer consulted.
- Explain and demonstrate the function of time and temperature controls, radiator valves etc., for the economic use of the system.

Loss of system water pressure

- Explain that when there is a significant loss of pressure the user should contact a Corgi registered installer.

WARNING
Do not fire the boiler if the pressure has reduced to zero from the original setting.

- After installation, commissioning and customer handover instructions please complete the **BENCHMARK** appliance log book and leave this with the customer.
- **IMPORTANT**
  A comprehensive service should be carried out annually. Stress the importance of regular servicing by a Corgi registered installer.

3 Inspection

3.1 Preparing the heating boiler for inspection

- Disconnect the system.

DANGER OF FATAL INJURY
due to electric shock when system is opened.

- Before opening the system: disconnect the heating unit at the emergency OFF switch or the corresponding circuit breaker of the house power supply.
- Ensure that the heating system cannot be reconnected by accident.

- Remove the burner housing or cover from the heating boiler.

NOTE
If the gas supply pipes are to be disconnected from the burner, the housing MUST ONLY be removed by a qualified service technician and checked for tightness on reassembly.

For further information, please refer to subsection 8.2 "Inspection and maintenance reports" on page 54 and fill out the **Benchmark**.

4 Maintenance

For further information, please refer to subsection 8.2 "Inspection and maintenance reports" on page 54 and fill out the **Benchmark**.

4.1 Clean the heat exchanger, burner and condensate trap

NOTE
The cleaning of the burner and heat exchanger described here should be carried out whenever there are signs of heavy soiling on the wall-mounted condensing gas boiler. It is sufficient, during annual servicing, to clean the burner and heat exchanger with the help of an appropriate cleaning product and a soft brush and compressed-air hose (see following section).
The heat exchanger can be dismantled completely for thorough cleaning if required (see “Cleaning the heat exchanger after dismantling” on page 28).

4.1.1 Cleaning the heat exchanger without dismantling

- Disconnect the system from the power supply.
- Close the gas service valve.
- Loosen the fixing screws, remove casing and ventilation cover.
- Release plug-in connection of fan power lead (fig. 27, item 1), burner-control unit fan control lead (fig. 27, item 2) and gas-burner assembly (fig. 27, item 3).
- Loosen union nut on gas valve assembly (fig. 27, item 4).
- Push safety plate out of way.
- Turn air suction tube and pull off from below.
- Swivel the air combination unit forward (fig. 28, item 1).
- Pull the air combination unit up and out of bayonet connector (fig. 28, item 2) and remove via front of unit.
- Remove burner gasket (fig. 29, item 1).
- Remove rubber seal in heat exchanger by pushing upwards from inside (fig. 29, item 2).

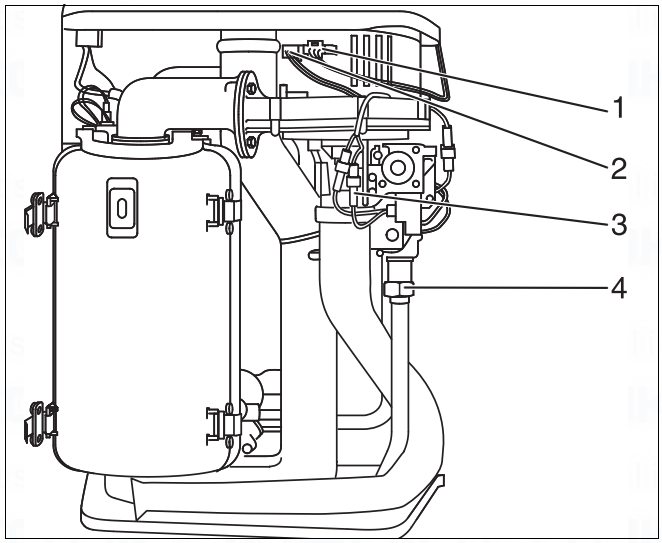

Fig. 27 Loosen the union nut and remove the cable

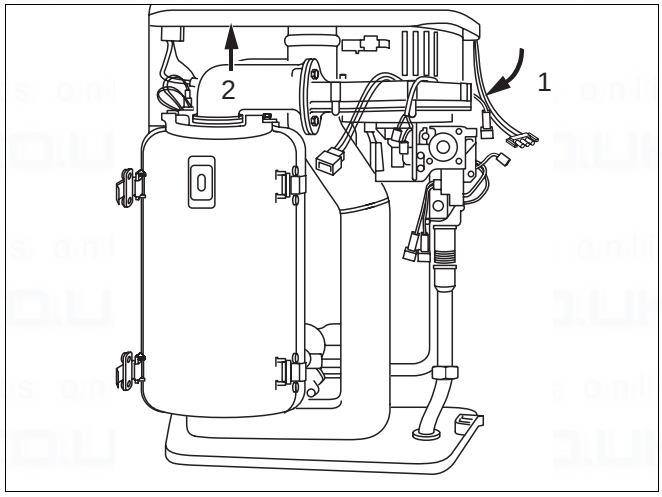

Fig. 28 Remove the air combination unit

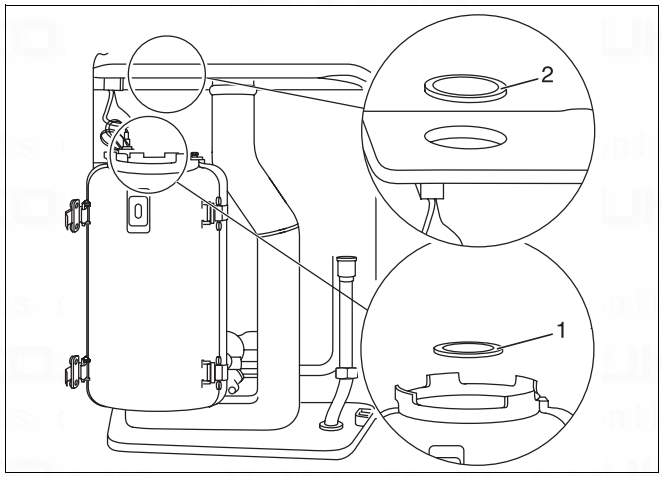

Fig. 29 Remove burner gasket and rubber seal

- Remove heat exchanger by pulling upwards through the opening (fig. 30).

NOTE
Maintain the specified clearance of approx. 25 cm between the ceiling and the ventilation cover.

- Remove the front of the heat exchanger. This is done by releasing the four snap catches at the sides.
- Remove the hot surface ignitor (fig. 31, item 1) and ionisation electrode (fig. 31, item 2).
  In the case of the hot surface ignitor: loosen the fixing screw of the hot surface ignitor, detach both earth (ground) leads and remove the retaining plate of the hot surface ignitor by pulling it upwards, withdraw the hot surface ignitor by pulling it upwards.
  In the case of the ionisation electrode: Swivel the retaining plate to one side and carefully remove the ionisation electrode by pulling it upwards.
- Clean the burner and both parts of the heat exchanger with compressed-air or brush.
- Refit the heat exchanger by following the above procedure in reverse order.

CAUTION
The gasket between the two halves of the casing shell should normally be replaced.
Fit the new gasket by pressing in from the top on both sides, and without stretching.
DO NOT attempt to cut the gasket to size.

CAUTION
The burner gasket must match the shape of the groove in the housing.

CAUTION
Check the heat-exchanger for leaks BEFORE reassembling the casing shells.

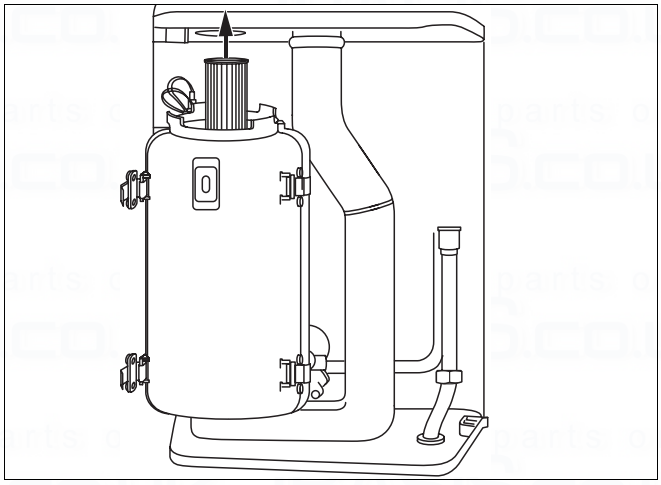

Fig. 30 Remove burner

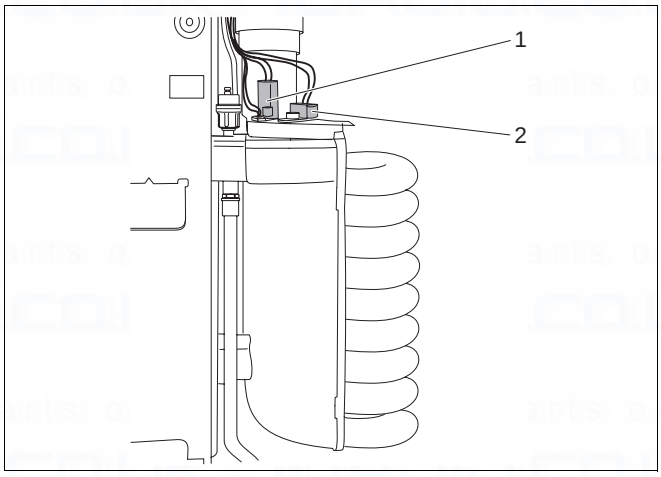

Fig. 31 Remove the hot surface ignitor and ionisation electrode

4.1.2 Cleaning the heat exchanger after dismantling

- Disconnect the system from the power supply.
- Close the gas service valve.
- Loosen the retaining screw and remove the casing.
- Close the heating shutoff valves and drain the system.

CAUTION
Cut hot water on supply side by closing the heating shutoff valve.

To drain the boiler take the following steps:

- First drain the system.
- In case of frost, drain the boiler.
- Loosen the draining nipple with a screwdriver see fig. 32.
- Attach temporary hose to the nipple. Connect the other side of the temporary hose to a draining pipe.
- When the boiler is drained then tighten the draining nipple screw.
- Release plug-in connection of fan power lead (fig. 27, item 1, page 27), burner-control unit fan control lead (fig. 27, item 2, page 27) and gas-burner assembly (fig. 27, item 3, page 27).
- Loosen union nut on gas valve assembly (fig. 27, item 4, page 27).
- Push safety plate out of way.
- Turn air suction tube and pull off from below.
- Swivel the air combination unit forward (fig. 28, item 1, page 27).
- Pull the air combination unit up and out of bayonet connector (fig. 28, item 2, page 27) and remove via front of unit.
- Remove rubber seal in combustion chamber from top (fig. 29, item 2, page 27).
- Remove burner and burner gasket (fig. 29, item 1, page 27) by pulling upwards through the opening (fig. 33, item 1).
- Remove the front of the heat exchanger by releasing the four retaining clips (fig. 33, item 2).
- Remove the hot surface ignitor (fig. 31, item 1) and ionisation electrode (fig. 31, item 2).
  In the case of the hot surface ignitor:
  Loosen the fixing screw of the hot surface ignitor, detach both earth (ground) leads and remove the retaining plate of the hot surface ignitor by pulling it upwards, withdraw the hot surface ignitor by pulling it upwards.
  In the case of the ionisation electrode:
  Swivel the retaining plate to one side and carefully remove the ionisation electrode by pulling it upwards.
- Remove securing pin on flow and return connection conduit (fig. 34) of heat exchanger.
- Remove spiral heat exchanger by pulling towards front (fig. 34). Drain any water remaining in the heat exchanger into the condensate trap.

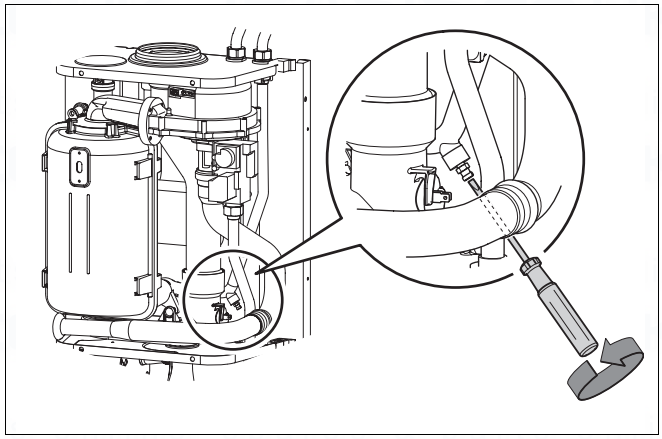

Fig. 32 Draining the boiler

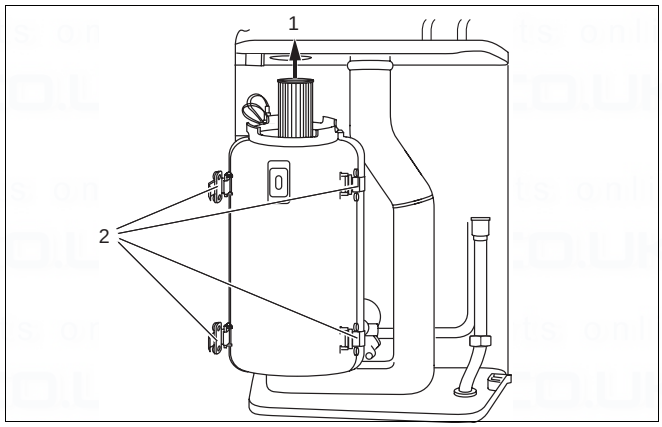

Fig. 33 Remove burner and release retaining clips

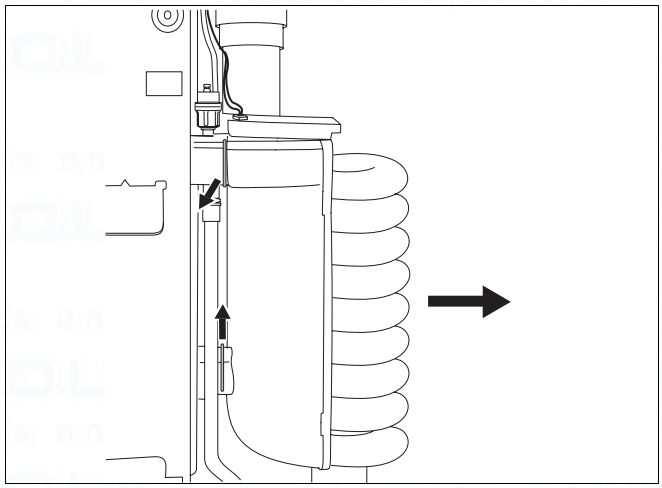

Fig. 34 Securing pin on spiral heat exchanger

- Remove the diffusion head (fig. 35, item 2) on the underside of the heat exchanger by withdrawing the securing pin (fig. 35, item 1) and unscrewing the diffusion head.
- Clean the front and back cover of the heat exchanger and the heat exchanger with water or compressed air.
- Clean the burner with compressed air only.

Take care not to damage the fins of the heat exchanger.

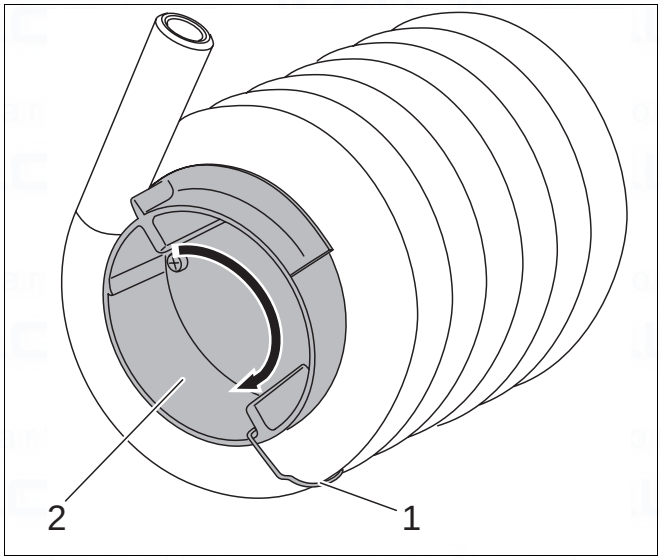

Fig. 35 Removing the diffusion head

Refitting (fig. 36) **:**

NOTE
Excessive flue gas temperatures may be an indication of an incorrectly-fitted diffusion head.

- Screw the diffusion head in as far as it will go on the underside of the heat exchanger (the final turn of the heat exchanger increases the clearance between the pipes) and insert securing pin.

CAUTION
Take care not to damage the insulation on the diffusion head.

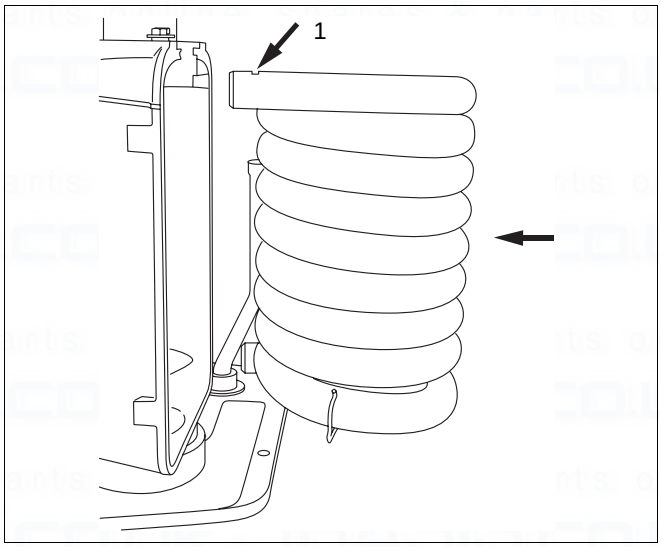

Fig. 36 Refitting the heat exchanger

- Check to ensure that the heat exchanger has been fitted the right way round. The upper securing-pin groove must be horizontal (fig. 36, item 1).
- Refit the heat exchanger by following the above procedure in reverse. Note the following:
- The gasket between the front and back cover of the heat exchanger should normally be replaced. Fit the new gasket by pressing in from the top on both sides, and without stretching. DO NOT attempt to cut the gasket to size.
- Check the heat exchanger for leaks BEFORE reassembling the front and back cover of the heat exchanger.
- Check O-ring seals (spiral), and replace as required.
- Smear the O-ring seal **with** a thin layer of silicone grease.

4.1.3 Cleaning the condensate trap

- Remove the trap and withdraw it from the outlet see fig. 37.
- Clean the condensate trap.
- Fill the condensate trap with water and then reassemble in reverse order.
- Measuring the gas input pressure (flow pressure).
- Check the gas/air ratio.
- Leak test in operational condition.
- Measuring the carbon monoxide content.
- Carry out function testing.

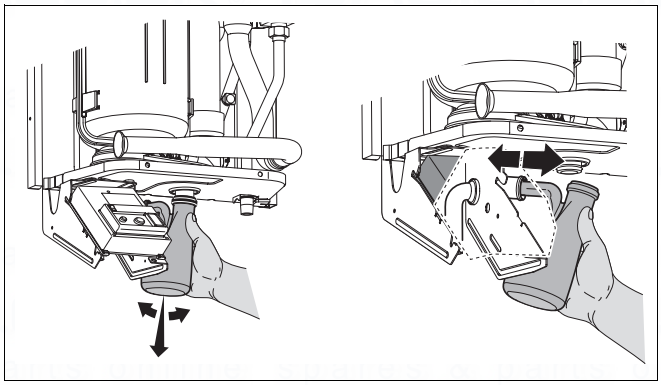
Fig. 37 Removing the condensate trap

5 Servicing

5.1 Operating codes

NOTE
If the code displayed on the burner-control unit is not listed under the operating codes or fault warnings, the burner-control unit itself is malfunctioning.

Display	Display after pressing the service button	Meaning
0		**Buderus 600 - 11R / 19R / 24R is ready for operation**
	A	Burner interval circuit, 10 min. from burner start-up
	H	Standby activated, Buderus 600 - 11R / 19R / 24R ready to provide heat
	L	Initial safety period: self-testing of burner-control unit during burner start-up
	U	Post- or pre-purging period of fan unit
	Y	Flow temperature over setpoint
-.		**Buderus 600 - 11R / 19R / 24R running in heating mode**
	A	“Chimney-sweep” mode, flow-temperature controller bypassed, Buderus 600 - 11R / 19R / 24R heating to previously-entered flow temperature.
	H	Normal heating mode
	Y	Service mode
r		**Reset**

5.2 Fault codes

Code	Meaning	
2C	*Safety sensor exceeds 95 °C*	
Possible cause		**Action**
1	Resistance in the installation is too high	Check if not all (thermostatic) radiator valves are clogged with dirt.
2	Heating capacity is too large for the installation	Adjust the heating capacity (see subsection 2.1.6)
3	Safety sensor is faulty	Measure if resistance over the sensor is correct. If not replace safety sensor (see subsection 5.3.8, subsection 5.3.9, subsection 5.3.10)
4	Problem with the pump or pump cabling (no circulation)	Check if the pump cabling is faulty or if the pump is stuck
5	Water pressure is too low in the installation	Top up the system

Code	Meaning	
2F	*Temperature difference between the safety sensor and flow sensor is greater than or equal to 15 °K*	
Possible cause		**Action**
1	Resistance in the installation is too high	Check if not all (thermostatic) radiator valves are closed or clogged with dirt
2	Safety sensor is dirty or faulty	Check the safety sensor for dirt. Measure if resistance over the sensor is correct. If not replace safety sensor (see subsection 5.3.8, subsection 5.3.9, subsection 5.3.10)
3	Flow sensor is dirty or faulty	Check the sensor, replace if necessary (see subsection 5.3.11, subsection 5.3.12, subsection 5.3.13)
4	Problem with the pump or pump cabling (no circulation)	Check if the pump cabling is faulty or if the pump is stuck. Replace pump if necessary.
5	Water pressure is too low in the installation	Top up the system

Code	Meaning	
2P	*Safety sensor rises faster than 5 °C/sec.*	
Possible cause		**Action**
1	Heating capacity is too large for the installation	Adjust the heating capacity (see subsection 2.1.6)
2	Resistance in the installation is too high	Check if not all (thermostatic) radiator valves are closed or clogged with dirt
3	Safety sensor is dirty or faulty	Check the safety sensor for dirt. Measure if resistance over the sensor is correct. If not replace safety sensor (see subsection 5.3.8, subsection 5.3.9, subsection 5.3.10)

Code	Meaning	
2U	*Temperature difference between flow and return more than 55 °C*	
Possible cause		**Action**
1	Flow sensor is dirty or faulty	Check the sensor, replace if necessary (see subsection 5.3.11, subsection 5.3.12, subsection 5.3.13)
2	Problem with the pump or pump cabling (no circulation)	Check if the pump cabling is faulty or if the pump is stuck. Replace pump if necessary.
3	Water pressure is too low in the installation	Top up the system
4	Resistance in the installation is too high	Check if not all (thermostatic) radiator valves are closed or clogged with dirt
5	Safety sensor is dirty or faulty	Check the safety sensor for dirt. Measure if resistance over the sensor is correct. If not replace safety sensor (see subsection 5.3.8, subsection 5.3.9, subsection 5.3.10)

Code	Meaning	
3C	*Bad plug-in connection at cable harness, or damaged wiring*	
Possible cause		**Action**
1	Cable harness is faulty	Check cable harness for faults and bad connections
2	Connectors at the back of the UBA are loose or faulty	Check the connectors at the back of the UBA
3	UBA might be faulty	Check the UBA by temporarily connecting an other UBA (see subsection 5.3.3)

Code	Meaning	
4A	*Flow sensor exceeds 100 °C*	
Possible cause		**Action**
1	Flow sensor is dirty or faulty	Check the sensor, replace if necessary (see subsection 5.3.11, subsection 5.3.12, subsection 5.3.13)
2	There is a problem with the pump or pump cabling (no circulation)	Check if the pump cabling is faulty or if the pump is stuck. Replace pump if necessary.
3	Water pressure is too low in the installation	Top up the system

Code	Meaning	
4C	*F2 fuse malfunction, or flue gas thermostat active*	
Possible cause		**Action**
1	Water pressure is too low in the installation	Top up the system
2	Heat exchanger is dirty	Check for a dirty heat exchanger and clean if necessary. (see subsection 4.1)
3	Flue gas retarder faulty or missing	Check if the flue gas retarder is installed in the heat exchanger
4	Heat exchanger has a problem	Purge heat exchanger

Code	Meaning	
4F	*Safety sensor exceeds 95 °C*	
Possible cause		**Action**
1	Resistance in the installation is too high	Check if not all (thermostatic) radiator valves are clogged with dirt
2	Heating capacity is too large for the installation	Adjust the heating capacity
3	Safety sensor is faulty	Check the sensor and measure if resistance over the sensor is correct. If not replace safety sensor (see subsection 5.3.8, subsection 5.3.9, subsection 5.3.10)
4	Problem with the pump or pump cabling (no circulation)	Check if the pump cabling is faulty or if the pump is stuck
5	Water pressure is too low in the installation	Top up the system

Code	Meaning	
4L	*Short circuit in safety sensor*	
Possible cause		**Action**
1	Safety sensor is faulty	Check the sensor and measure if resistance over the sensor is correct. If not replace safety sensor (see subsection 5.3.8, subsection 5.3.9, subsection 5.3.10)
2	A short or bad connection in the cable harness	Check the cable harness and/or connector of the sensor
3	UBA might be faulty	Check the UBA by temporarily connecting a different UBA (see subsection 5.3.3)

Code	Meaning	
4P	*Safety sensor has a loose connection or is defective*	
Possible cause		**Action**
1	Safety sensor faulty or disconnected	Check the sensor and measure if resistance over the sensor is correct. If not replace safety sensor (see subsection 5.3.8, subsection 5.3.9, subsection 5.3.10)
2	A short or bad connection in the cable harness	Check the cable harness and/or connector of the sensor
3	UBA might be faulty	Check the UBA by temporarily connecting a different UBA (see subsection 5.3.3)

Code	Meaning	
4U	*Short circuit in flow sensor*	
Possible cause		**Action**
1	Flow sensor is dirty or faulty	Check the sensor, replace if necessary (see subsection 5.3.11, subsection 5.3.12, subsection 5.3.13)
2	A short or bad connection in the cable harness	Check the cable harness and/or connector of the sensor
3	UBA might be faulty	Check the UBA by temporarily connecting a different UBA (see subsection 5.3.3)

Code	Meaning	
44	*Flow sensor interrupted*	
Possible cause		**Action**
1	Flow sensor faulty or disconnected	Check the sensor and measure if resistance over the sensor is correct. If not replace safety sensor (see subsection 5.3.11, subsection 5.3.12, subsection 5.3.13)
2	A short or bad connection in the cable harness	Check the cable harness and/or connector of the sensor
3	UBA might be faulty	Check the UBA by temporarily connecting a different UBA (see subsection 5.3.3)

Code	Meaning	
6A	*F1 fuse defective, or no ionisation message after ignition*	
Possible cause		**Action**
1	There is no flame, ionisation electrode doesn't glow, fan is turning	– Check wiring of the hot surface ignitor, measure the resistance of the hot surface ignitor (should be between 50 and 300 Ohm). Replace hot surface ignitor if necessary (see subsection 5.3.14 and subsection 5.3.15) – Check the UBA's F1 fuse, replace if necessary
2	There is no flame, ionisation electrode does glow, fan isn't turning	– Check the fan and KIM connectors and the UBA fuses
3	There is no flame, ionisation electrode and fan are working	– Check and adjust the gas/air ratio (see subsection 2.1.8) – Check for 24 V~ on the gas valve during start up – Check the gas-supply pressure (see subsection 2.1.7), this should be higher than 20 mbar for natural gas. – Check the earthing cable connections (yellow/green wire). – Check the cabling on the ionisation electrode
4	There is a flame, but the flame disappears when the fan starts up	– Check the gas-supply pressure (see subsection 2.1.7), this should be higher than 20 mbar for natural gas. – Check and adjust the gas/air ratio (see subsection 2.1.8) – Check the earthing cable connections (yellow/green wire) – Check the cabling on the ionisation electrode – Press reset. If fault code remains than try to temporarily connect a different UBA (see subsection 5.3.3)

Code	Meaning	
6C	*Ionisation message, but no flame*	
Possible cause		**Action**
1	There is no flame, ionisation electrode doesn't glow, fan is turning	– Check wiring of the hot surface ignitor, measure the resistance of the hot surface ignitor (should be between 50 and 300 Ohm). Replace hot surface ignitor if necessary (see subsection 5.3.14 and subsection 5.3.15) – Check the UBA's F1 fuse, replace if necessary
2	There is no flame, ionisation electrode does glow, fan isn't turning	– Check the fan and KIM connectors and the UBA fuses
3	There is no flame, ionisation electrode and fan are working	– Check and adjust the gas/air ratio (see subsection 2.1.8) – Check for 24V – on the gas valve during start up – Check the gas-supply pressure (see subsection 2.1.7), this should be higher than 20 mbar for natural gas. – Check the earthing cable connections (yellow/green wire). – Check the cabling on the ionisation electrode
4	There is a flame, but the flame disappears when the fan starts up	– The gas valve doesn't close properly. If there is still more than 20 V~ on the gas valve when there is no heat demand then check the UBA by temporarily connecting a different UBA. – Check ionisation electrode/circuit (see subsection 2.1.10 and subsection 5.3.17) – When both the UBA and the ionisation electrode/circuit are OK, then replace the gas valve – Press reset. If fault code remains than try to temporarily connect a different UBA (see subsection 5.3.3)

Code	Meaning	
6H	*Flame dies out after gas valve is opened*	
Possible cause		**Action**
1	Gas/air ratio not in order	Check and adjust the gas/air ratio (see subsection 2.1.8)
2	Gas supply pressure may need adjusting	Check the gas-supply pressure (see subsection 2.1.7), this should be higher than 20 mbar for natural gas
3	Earthing cable may be faulty	Check the earthing cable connections (yellow/green wire)
4	Ionisation electrode may be faulty	Check the cabling on the ionisation electrode

Code	Meaning	
6L	*Flame goes out during warm-up phase*	
Possible cause		**Action**
1	Gas/air ratio not in order	Check and adjust the gas/air ratio (see subsection 2.1.8)
2	Gas supply pressure may need adjusting	Check the gas-supply pressure (see subsection 2.1.7), this should be higher than 20 mbar for natural gas
3	Earthing cable may be faulty	Check the earthing cable connections (yellow/green wire)
4	Ionisation electrode may be faulty	Check the cabling on the ionisation electrode

Code	Meaning	
7A	*Voltage in burner-control unit too low (lower than 187 V~) or too high (higher than 246 V~)*	
Possible cause		**Action**
1	Regulating device may have to cope with interference	– Check if for example induction fields interfere with the regulating device – Check if the are any peaks in the electrical network caused by maybe windmills or a power generator

Code	Meaning	
7C	*Mains supply interrupted*	
Possible cause		**Action**
1	A problem with the mains supply	Check the mains supply during operation (230V~)
2	Reset button pressed too briefly	Press the Reset button until "r" appears in the display

Code	Meaning	
7F	*F3 fuse defect, or burner control unit error*	
Possible cause		**Action**
1	Short circuit in the 24V circuit (three-way-valve or connector)	Check for a short circuit and replace the F3 fuse
2	Regulating device may have to cope with interference	– Check if for example induction fields interfere with the regulating device – Check if the are any peaks in the electrical network caused by maybe windmills or a power generator

Code	Meaning	
7H	*Voltage peaks in the UBA*	
Possible cause		**Action**
1	Regulating device may have to cope with interference	– Check if for example induction fields interfere with the regulating device – Check if the are any peaks in the electrical network caused by maybe windmills or a power generator

Code	Meaning	
7L	*Internal UBA error*	
Possible cause		**Action**
1	Regulating device may have to cope with interference	– Check if for example induction fields interfere with the regulating device – Check if the are any peaks in the electrical network caused by maybe windmills or a power generator

Code	Meaning	
8Y	*Gas fault*	
Possible cause		**Action**
1	External switching contact (e.g. temperature-monitoring device for underfloor heating has been tripped or gas pressure too low	Check gas pressure detector is defective or the wires have not been properly connected to the back of the UBA (see subsection 5.3.6)

Code	Meaning	
9A	*System error*	
Possible cause		**Action**
1	Regulating device may have to cope with interference	– Check if for example induction fields interfere with the regulating device – Check if the are any peaks in the electrical network caused by maybe windmills or a power generator
2	UBA may be defective	Press reset. If fault code remains then try to temporarily connect a different UBA

Code	Meaning	
9C	*KIM error*	
Possible cause		**Action**
1	Kim connected incorrectly or KIM defective	Check the KIM connector and fan connector. If the connectors are fine then contact Boulter Buderus

Code	Meaning	
9F/H	*System error*	
Possible cause		**Action**
1	Regulating device may have to cope with interference	– Check if for example induction fields interfere with the regulating device – Check if the are any peaks in the electrical network caused by maybe windmills or a power generator
2	UBA may be defective	Press reset. If fault code remains then try to temporarily connect a different UBA (see subsection 5.3.3)

Code	Meaning	
9L	*Gas valve assembly error*	
Possible cause		**Action**
1	Wiring to the gas valve incorrect, or loose wiring connections in UBA	– Check the electrical connections of the gas valve. – Measure the resistance of the gas valve (18-55 Ohm) – Check if for example induction fields interfere with the regulating device
2	UBA may be defective	– Press reset. If fault code remains then try to temporarily connect a different UBA (see subsection 5.3.3)
3	Peaks in the electrical network	– Check if the are any peaks in the electrical network caused by maybe windmills or a power generator

Code	Meaning	
9U	*KIM defective*	
Possible cause		**Action**
1	Kim connected incorrectly or KIM defective	Check the KIM connector and fan connector. If the connectors are fine then contact Boulter Buderus

Code	Meaning	
E with any character but P	*UBA defective*	
Possible cause		**Action**
1	Regulating device may have to cope with interference	– Check if for example induction fields interfere with the regulating device – Check if the are any peaks in the electrical network caused by maybe windmills or a power generator
2	UBA may be defective	– Press reset. If fault code remains then try to temporarily connect a different UBA (see subsection 5.3.3)

Code	Meaning	
EP	*Non compatible UBA fitted*	
Possible cause		**Action**
1	Regulating device may have to cope with interference	– Check if for example induction fields interfere with the regulating device – Check if the are any peaks in the electrical network caused by maybe windmills or a power generator
2	Kim connected incorrectly or KIM defective	– Check the KIM connector and fan connector. If the connectors are fine then contact Boulter Buderus

Problem: *No heating, despite that there is a demand for heat and the boiler is operational*
– Check regulating device configuration and/ or the wiring
– Check the wiring between the regulating device and the UBA (see subsection 5.3.6)
– Check all the wiring
– Check the UBA and replace if necessary (see subsection 5.3.3)

5.3 Checking and replacing parts

5.3.1 Checking the flue gas sensor

- Detach plug-and-socket connection on cable to flue gas sensor. Ensure that no cable is earthed (grounded) at any point.
- Allow the flue gas sensor to cool down. Activation temperature: Buderus 600 - 11R / 19R / 24R: 105 °C
- Check flue gas sensor for continuity. If continuity is not present, the flue gas sensor is defective.
- Replace any flue gas sensor found to be defective. Ensure you use only genuine Boulter Buderus spare parts.
- If the flue gas sensor is working correctly, plug it in once more.

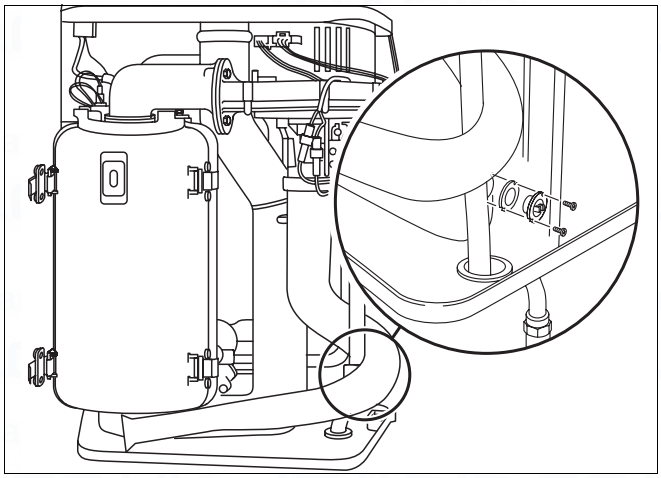

Fig. 38 Buderus 600 - 11R / 19R / 24R : replacing the flue gas sensor

5.3.2 Replacing the flue gas sensor

- Unscrew the flow-backup mounting.
- Detach the cable plug at the flue gas sensor.
- Loosen both retaining screws on the flue gas sensor.
- Remove the flue gas sensor and replace with a new unit (fig. 38).
- Retighten the retaining screws.
- Reconnect the cable plug.
- Screw the mounting into place.

5.3.3 Replacing the UBA

- Disconnect the system from the power supply.
- Loosen the two screws on the UBA (fig. 39, item 1).
- Carefully turn the UBA around with the backside facing up (fig. 40).
- Note the position of the cable plugs, disconnect all cable plugs.

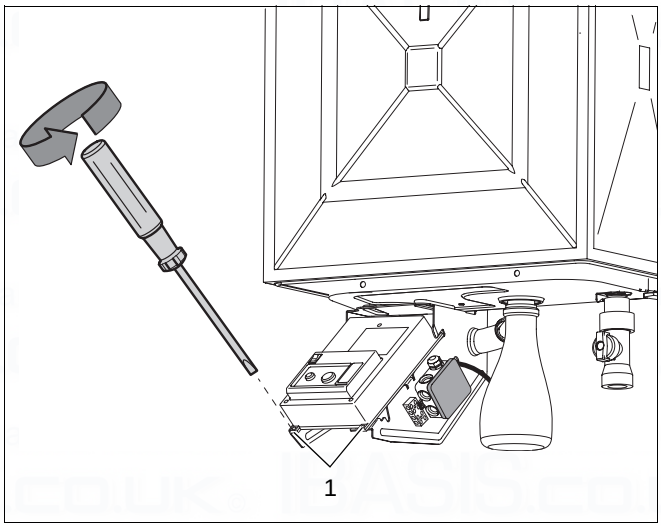

Fig. 39 Replacing the UBA

- Fit a new UBA.
- Reconnect all plug-in cables to their correct sockets.
- Turn the UBA around and place back onto the bracket.
- Tighten the two screws.
- Connect system to mains power supply.

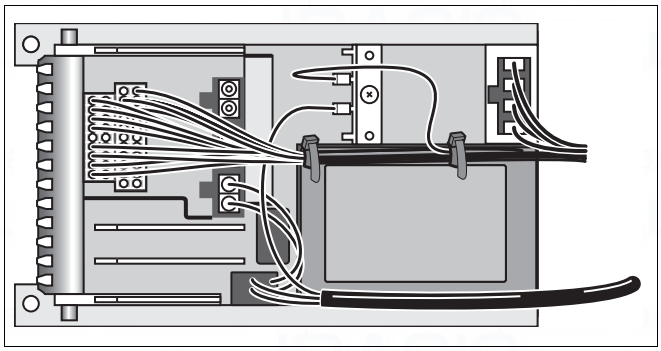

Fig. 40 Backside of the UBA

5.3.4 Checking the fan

- Set the mains switch to “**0**”.
- Disconnect the fan's plug and socket connection.
- Connect a multimeter (230 V AC).
- Turn the mains power switch to “**I**”.
- Take voltage reading at measuring device.
  If the voltage reading is 230 V, the power supply is in order.
- Set the mains switch to “**0**”.
- If the power supply is in order, plug the unit in once more.
- Turn the mains power switch to “**I**”.
- If the fan now fails to run, it must be replaced.
- If the fan runs at only partial load (i.e. effective operation of the boiler is not possible), troubleshooting should start at the connection cable to the UBA or UBA.

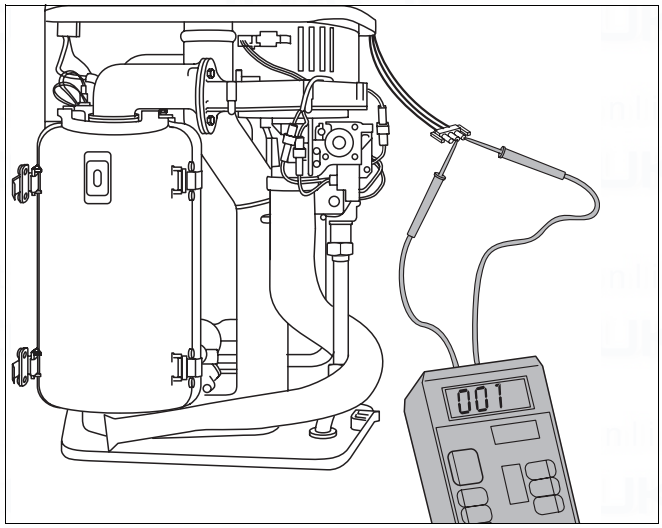

Fig. 41 Checking the fan

5.3.5 Replacing the fan

- Shut the gas valve.
- Disconnect the system from the power supply.
- Disconnect the fan, using the plug and socket from the power supply (fig. 42, item 1), loosen the UBA control line at the fan (fig. 42, item 2) and the gas burner fitting (fig. 42, item 3).
- Loosen the union nut (fig. 42, item 4) on the gas burner fitting.

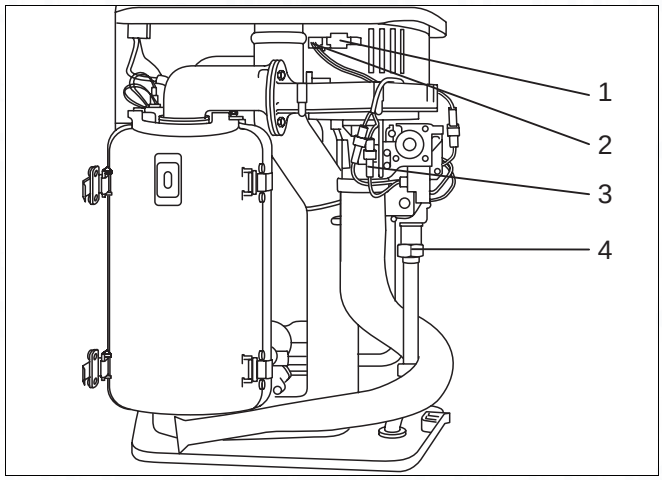

Fig. 42 Replacing the fan on the 600 Series: loosen plug and union nut

- Push the safety plate out of the way (fig. 43, item 1).
- Turn air suction tube and pull off from below.

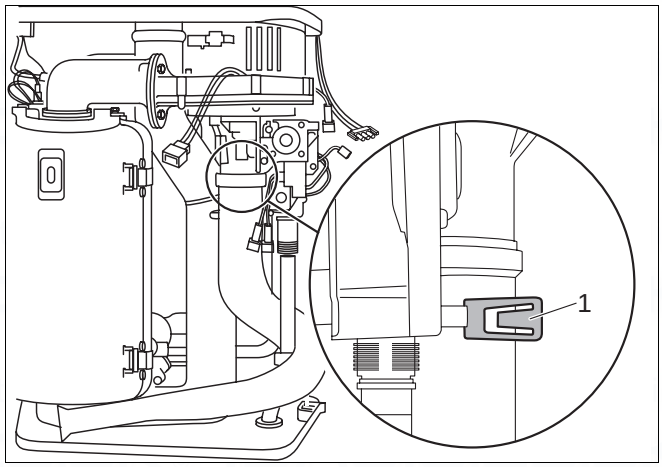

Fig. 43 Replacing the fan on the 600 Series: remove the air suction tube

- Swivel the gas combination unit forward (fig. 44, item 1)
- Remove the gas combination unit from its bayonet connector and pull upwards to detach (fig. 44, item 2).

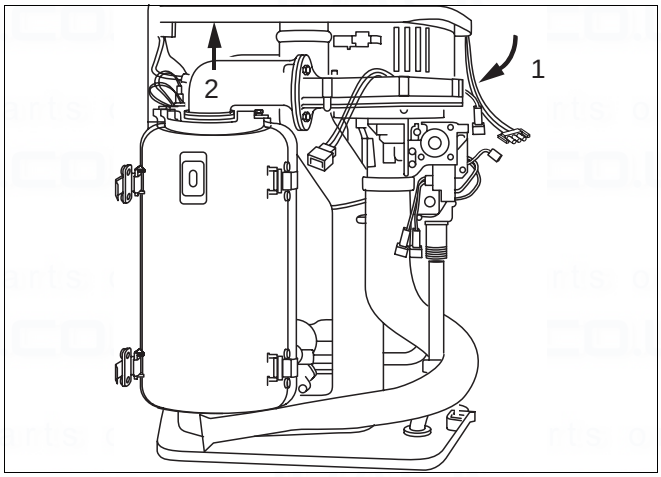

Fig. 44 Replacing the fan on the 600 Series: remove the gas connection unit

- Detach the fan by loosening the 2 x 2 screws on the connection unit.
- Replace the fan.
- Refit by following the above procedure in reverse.

NOTE
Once installation has been completed successfully, carry out leak testing as per subsection 2.1.1.

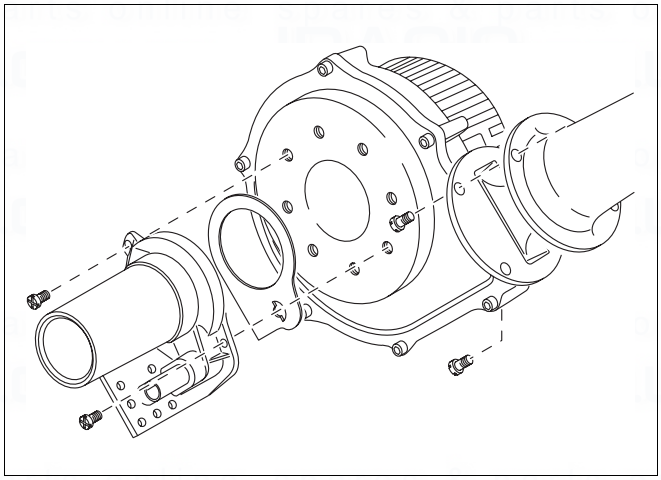

Fig. 45 Replacing the fan on the 600 Series: replace the fan

5.3.6 Checking the wiring connections of the UBA

- Disconnect the system from the power supply.
- Loosen the two fixing screws and carefully turn the UBA around (fig. 39, item 1, page 40).
- Check all cable terminals for tightness and resecure/retighten as required.
- Turn the UBA around and place back onto the bracket.
- Tighten the two screws.
- Connect system to mains power supply.

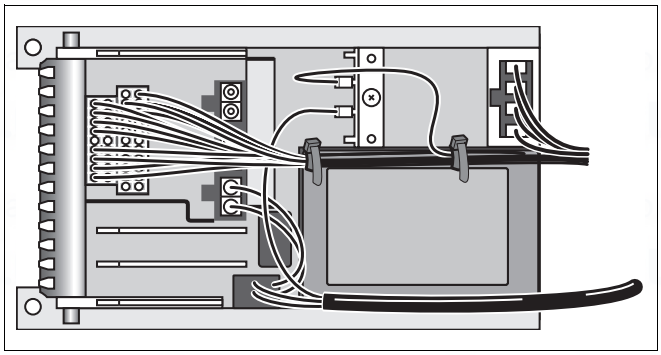

Fig. 46 Checking the wiring connections of the UBA

5.3.7 Checking the miniature fuses

- Disconnect the system from the power supply.
- Loosen the two fixing screws and carefully turn the UBA around.
- Check miniature fuses (fig. 47) for correct functioning, or carry out visual inspection. If defective, fit new fuse (1.25 AT).

Fuse	Function
1	Hot surface ingitor
2	UBA, sensors, thermostat valve
3	UBA

- Turn the UBA around and place back onto the bracket.
- Tighten the two screws.
- Connect system to mains power supply.

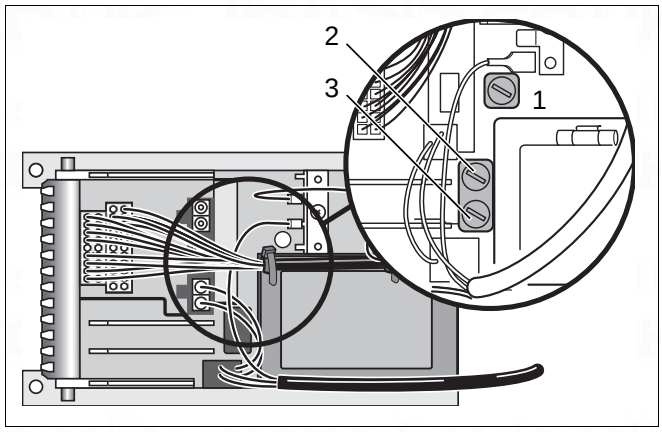

Fig. 47 Checking the miniature fuse

5.3.8 Checking the safety sensor

- Unplug cable connection from sensor.
- Measure resistance of sensor (fig. 48, item 1).
- Use a second-reading thermometer to measure the temperature around the sensor.
- Compare readings with values shown in table 8 on page 44. If there is any mismatch (i.e. > 5%), the sensor is defective.
- If the sensor is working correctly, plug it in once more.

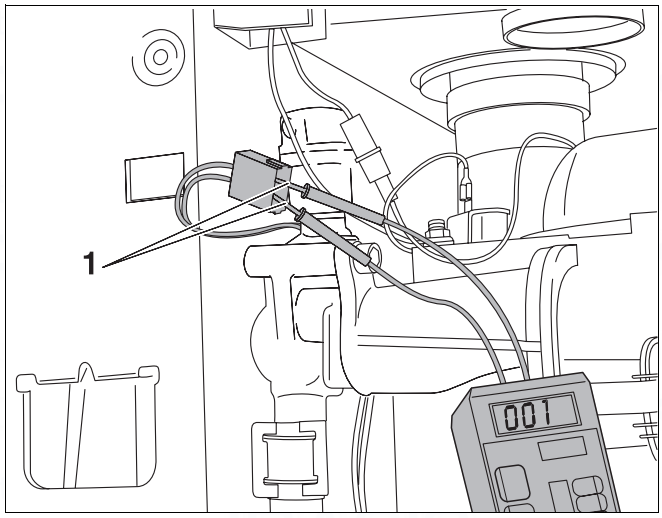

Fig. 48 Buderus 600 - 11R / 19R / 24R: checking the safety sensor

5.3.9 Replacing the safety sensor

- Shut the servicing valve.
- Drain the Buderus 600 - 11R / 19R / 24R as per the "Installation and Servicing Instructions".
- Loosen the plug-in connection (fig. 49, item 1).
- Unscrew the sensor (fig. 49, item 2) and replace with a new unit.
- Plug in cable connection.
- Open servicing valves.

NOTE
Fill the Buderus 600 - 11R / 19R / 24R and purge the system of air.

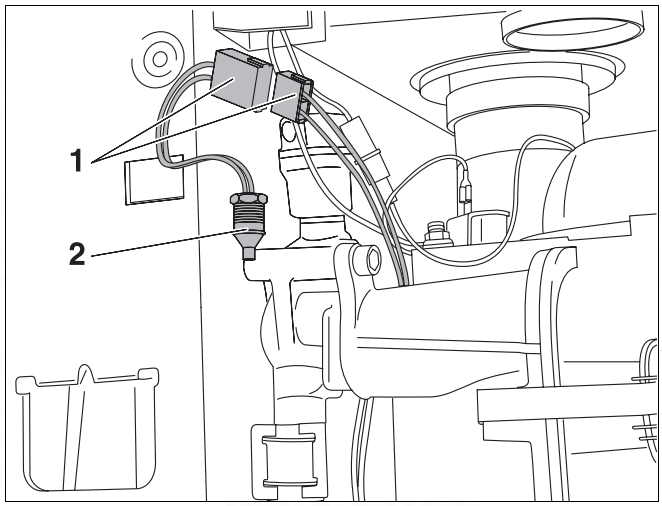

Fig. 49 Buderus 600 - 11R / 19R / 24R: replacing the safety sensor

5.3.10 Checking the safety sensor connection lead

Check to ensure that all plug-in connections on the sensor and UBA are in order. Note that an incorrectly-inserted plug can lead to the generation of error messages. Start up the boiler by pressing the “reset” button.

- Set the mains switch to “**0**”.
- Disconnect the system from the power supply.
- Unplug cable connection from flow sensor.
- Disconnect 18-pin plug from UBA.
- Use a continuity tester to check the cable between the plug-in connection and the 18-pin plug in the UBA.
  The test should be carried out on connections 06-18 and 08-18 (fig. 50).
- If the cables are in order, plug them in.
- Connect system to mains power supply.
- Turn the mains power switch to “**I**”.

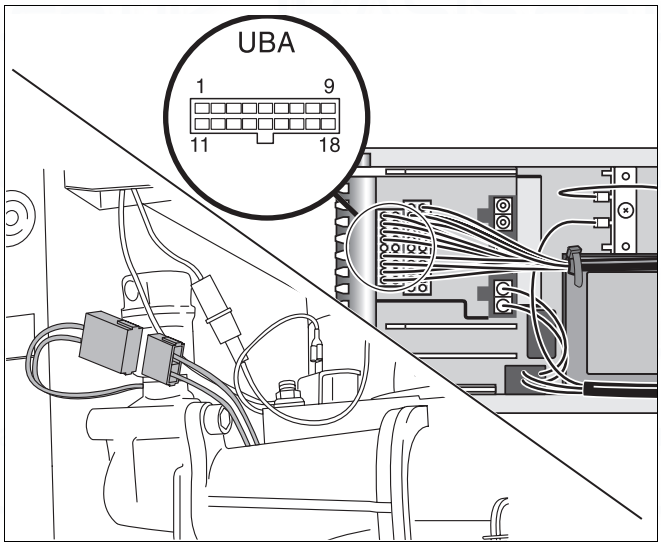

Fig. 50 Buderus 600 - 11R / 19R / 24R: checking the safety sensor connection lead

5.3.11 Checking the flow sensor

- Unplug cable connection from sensor.
- Measure resistance of sensor (fig. 51, item 1).
- Use a second-reading thermometer to measure the temperature around the sensor.
- Compare readings with values shown in table 8. If there is any mismatch (i.e. > 5%), the sensor is defective.
- If the sensor is working correctly, plug it in once more.

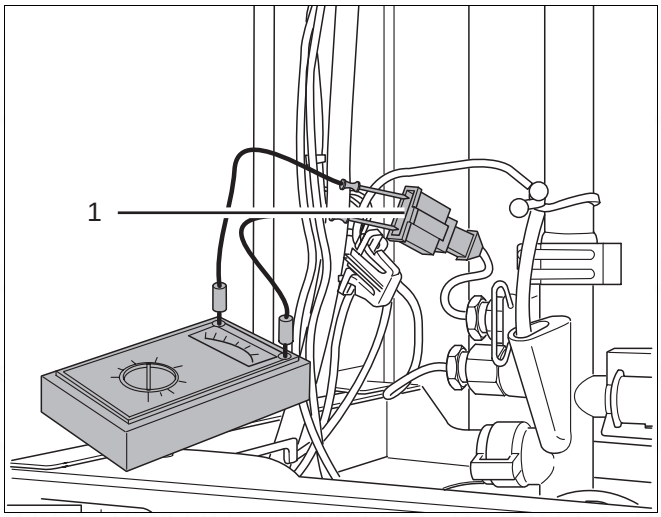

Fig. 51 Buderus 600 - 11R / 19R / 24R: checking the flow sensor

Temp. [°C]	Resistance [Ω]	Temp. [°C]	Resistance [Ω]
0	29,490		
5	23,462	55	3,271
10	18,787	60	2,760
15	15,136	65	2,339
20	12,268	70	1,990
25	10,000	75	1,700
30	8,197	80	1,458
35	6,754	85	1,255
40	5,594	90	1,084
45	4,656	95	939.6
50	3,893	100	817.2

Table 8 Resistance values for hot water / boiler sensor (approximate values)

5.3.12 Replacing the flow sensor

- Shut the servicing valve.
- Drain the Buderus 600 - 11R / 19R / 24R as per the "Installation and Servicing Instructions".
- Loosen the plug-in connection (fig. 52, item 1).
- Unscrew the sensor (fig. 52, item 2) and replace with a new unit.
- Plug in cable connection.
- Open servicing valves.

NOTE
Fill the Buderus 600 - 11R / 19R / 24R and purge the system of air.

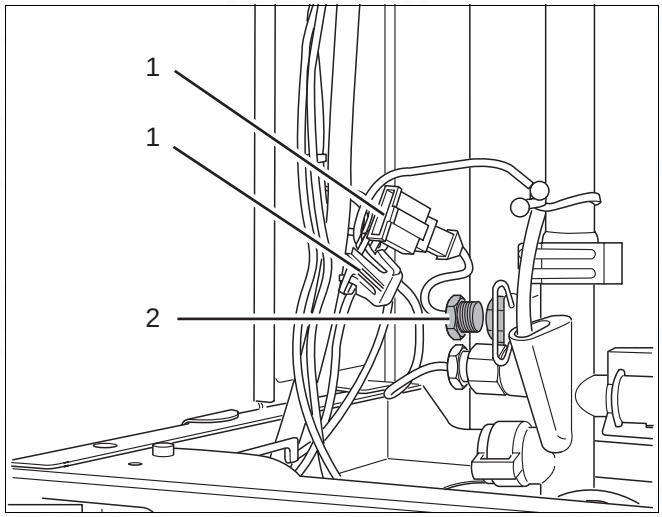

Fig. 52 Buderus 600 - 11R / 19R / 24R: replacing the flow sensor

5.3.13 Checking the flow sensor connection lead

Check to ensure that all plug-in connections on the sensor and UBA are in order. Note that an incorrectly-inserted plug can lead to the generation of error messages. Start up the boiler by pressing the “reset” button.

- Set the mains switch to “**0**”.
- Disconnect the system from the power supply.
- Unplug cable connection from flow sensor.
- Disconnect 20-pin plug from UBA.
- Use a continuity tester to check the cable between the plug-in connection and the 20-pin plug in the UBA.
  The test should be carried out on connections 05-20 and 18-20 (fig. 53).
- If the cables are in order, plug them in.
- Connect system to mains power supply.
- Turn the mains power switch to “**I**”.

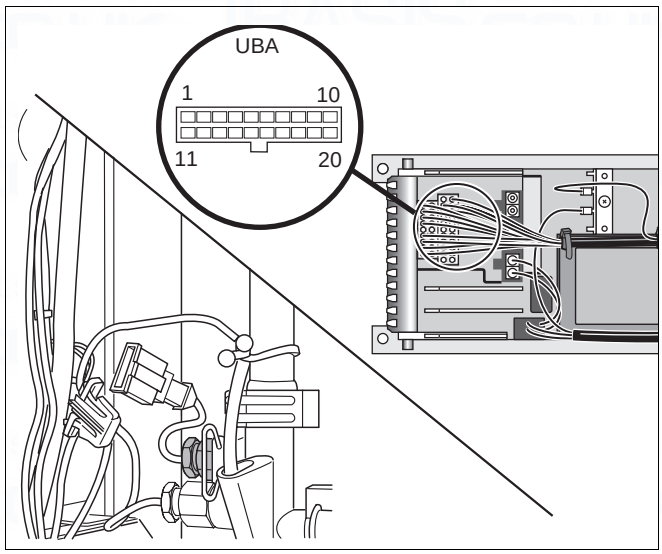

Fig. 53 Buderus 600 - 11R / 19R / 24R: checking the flow sensor connection lead

5.3.14 Checking the hot surface ingitor

- Disconnect the system from the power supply.
- Loosen the two fixing screws and carefully turn the UBA around.
- Unplug and remove hot surface ingitor from UBA housing (fig. 54).
- Check hot surface ingitor for free throughput.
  If throughput is free, the hot surface ingitor is in order.
- If the hot surface ingitor is in order, plug the cable into the UBA housing.
- Turn the UBA around and place back onto the bracket.
- Tighten the two screws.
- Connect system to mains power supply.

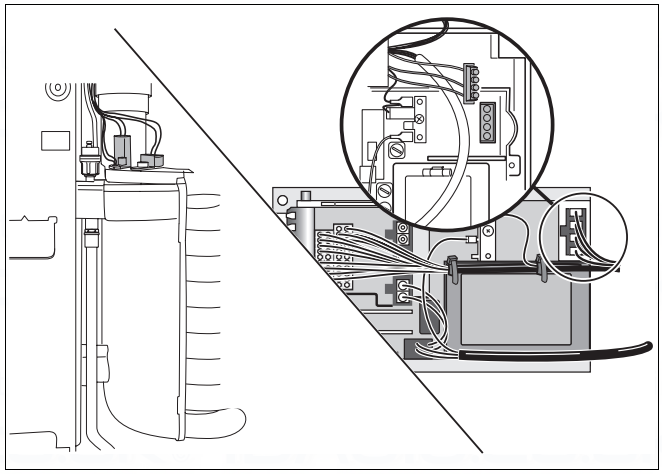

Fig. 54 Checking the hot surface ingitor

5.3.15 Replacing the hot surface ingitor

- Disconnect the system from the power supply.
- Remove burner cover.
- Remove the earth (ground) lead from the hot surface ingitor (fig. 55, item 1).

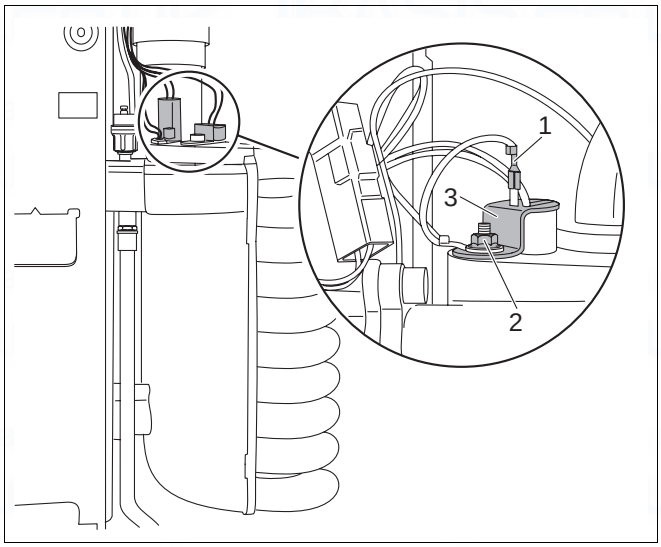

Fig. 55 Replacing the hot surface ingitor

- Loosen the two screws on the UBA and carefully turn the UBA around with the backside facing up.
- Unplug hot surface ingitor connection cable from UBA (fig. 56).
- Loosen nut on clamp used to secure earth (ground) lead (fig. 55, item 2).
- Detach retaining plate of hot surface ingitor (fig. 55, item 3) and remove hot surface ingitor.

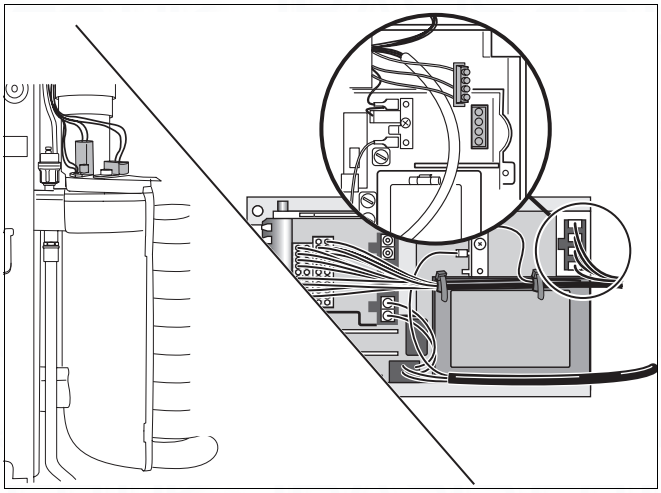

Fig. 56 Disconnect the plug-in cable from the UBA housing

5.3.16 Measuring the ionisation current

- Disconnect the system from the power supply.
- Loosen the plug-and-socket connector of the monitoring cable and connect the measuring device in series. Select the µA direct current range on the multimeter. The multimeter must have a resolution of at least 1 µA.
- Reconnect the system to the power supply, make sure that the system pump is running and turn the chimney-sweep switch to “**1**”.
- Measure the ionisation current. The ionisation current must be > 2 µA DC.
- Enter the reading on the report form.
- Disconnect the system from the power supply.
- Remove the measuring device and restore the plug-and-socket connection to its original state.
- Turn the chimney-sweep switch to position “**0**”.
- Refit the cover for 2nd operating level.
- Reconnect the system to the power supply. When the display shows “**7**”, press the service button to display “**c**”. Press the "reset" button. The display shows “**r**”.

5.3.17 Replacing the ionisation electrode

- Remove the air combination unit.
- Loosen the plug-and-socket connection of the ionization electrode.
- Loosen screw (fig. 57, item 1) by a half-turn and slide bar to remove.
- Pull electrode to remove, and fit new unit.
- Reassemble by following the above procedure in reverse.

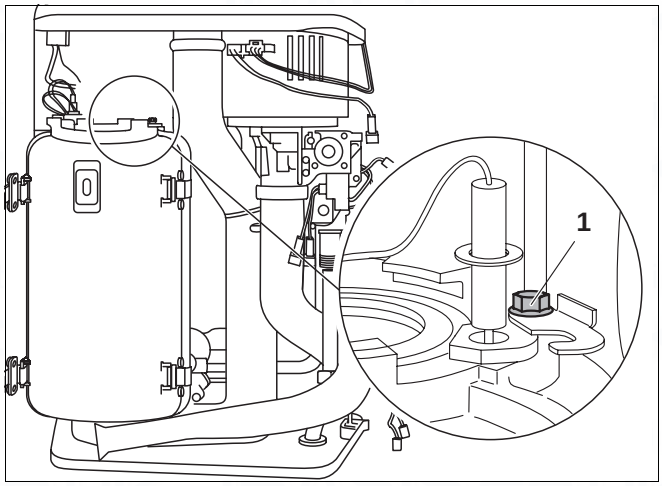

Fig. 57 Replacing the ionisation electrode

5.3.18 Checking KIM connections

- Locate Kim on the side of the UBA bracket.
- Check if 4 pin connector (fig. 58, item 1) is fitted and secure.

NOTE
This is not a servicable part and any fault identified with this component, contact Boulter Buderus.

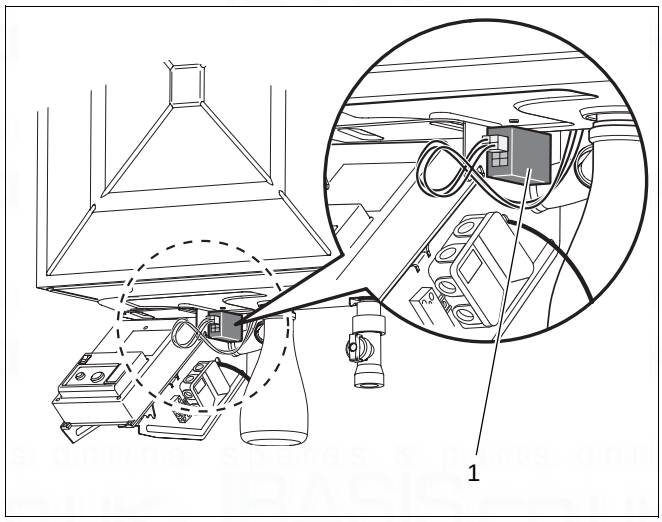

Fig. 58 KIM connections

6 Conversion to another type of gas

WARNING!
Work on components in contact with gas must only be carried out by a registered CORGI engineer.

Switch off the heating boiler

- Disconnect the system from the power supply.
- Close the gas service valve.
- Loosen the 4 crosshead screws on the ventilation cover (fig. 59).
- Remove the ventilation cover.

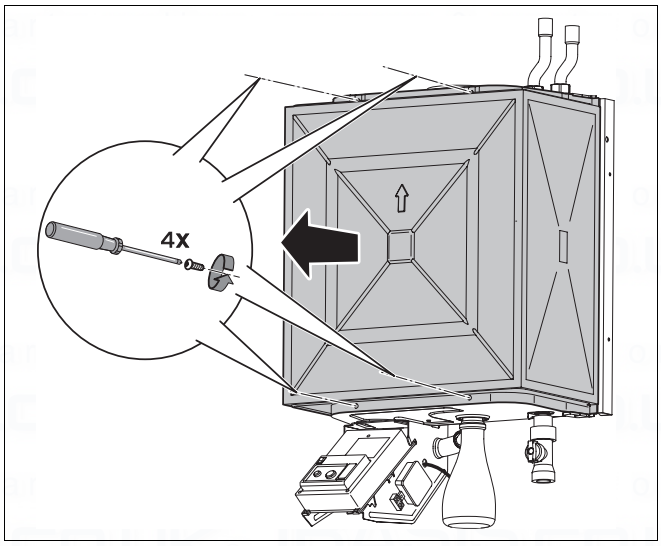

Fig. 59 Unscrew ventilation cover

- Loosen union nut on gas valve assembly (fig. 60, item 4).
- Release plug-in connection of fan power lead (fig. 60, item 1), burner-control unit fan control lead (fig. 60, item 2) and gas-burner assembly (fig. 60, item 3).

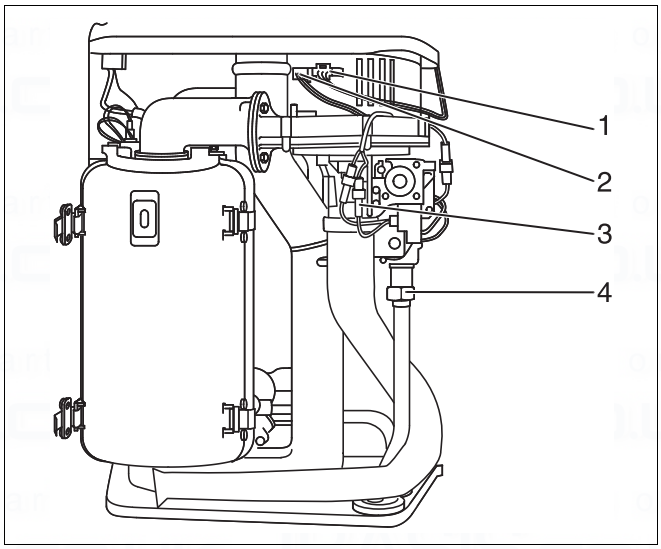

Fig. 60 Loosen the union nut and remove the cable

- Push safety plate out of way (fig. 61, item 1).
- Turn air suction tube and pull off from below.

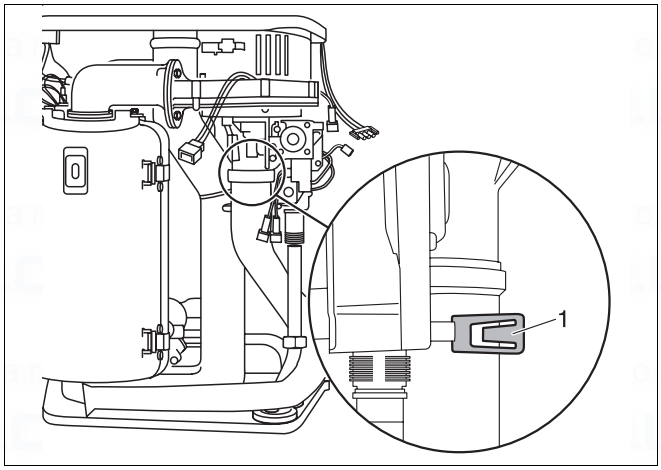

Fig. 61 Remove safety plate

- Swivel the air combination unit forwards (fig. 62, item 1).
- Pull the air combination unit up and out of the bayonet connector (fig. 62, item 2) and remove via the front of the unit.

Type of gas supply	Gas nozzles ∅ [mm]		Venturi tubes
	11R	19R/24R	
Natural gas **H** (G20)	5.55	6.5	Standard
Propane **P**	3.40	4.15	Standard

Table 9 Gas-nozzle diameter

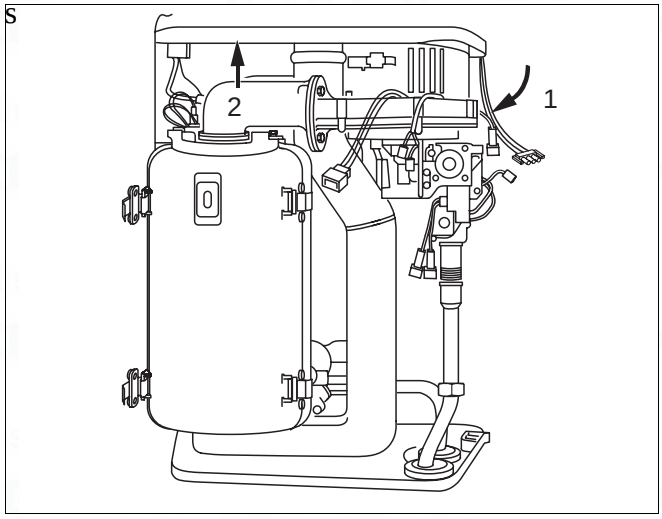

Fig. 62 Remove the air combination unit

Replacing a gas nozzle

WARNING!
Conversion to another gas type is implemented by installing/removing a gas nozzle (fig. 63, item 3) of the appropriate gas nozzle diameter (table 9).

- Undo the three screws (fig. 63, item 2) on the long side of the gas fitting.
- Remove the gas nozzle and insert the correct gas nozzle for the new gas type.
- Insert new seal (fig. 63, item 4).
- Remount all components in the reverse sequence.
- Cover stickers (fig. 64, item 1) with the new stickers (2 pieces, included in conversion kit).

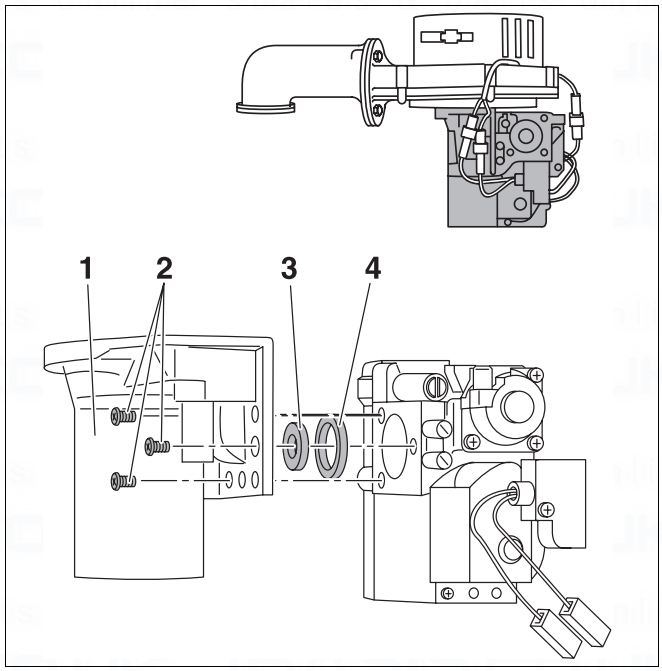

Fig. 63 Replacing a gaz nozzle

Starting up

- Start up the appliance following the procedure described in the mounting and maintenance instructions.
- Include all seal areas concerned during mounting in the gas-tightness check when in operation.
- Refit all covers.

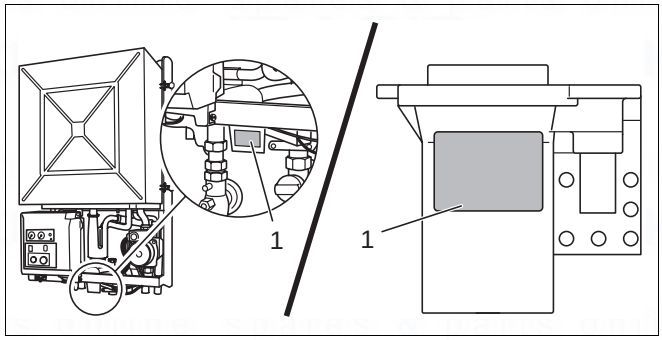

Fig. 64 Place new stickers

7 Appendix

7.1 Technical specifications

Dimensions	Unit	600 Series Buderus wall-mounted condensing gas boiler		
		11R	19R	24R
Type of gas supply as established in EN 437 (GB)		GB II_{2H3P} 20 mbar, 37 mbar (natural gas **H,** propane **P**)		
Rated heating capacity for system temperature (modulating from 30° to 100°) Heating curve 75/60 °C Heating curve 40/30 °C	 kW kW	 4.3 - 10.0 4.9 - 11.0	 8.6 - 17.4 9.7 - 19.0	 8.6 - 22.0 9.7 - 24.0
Seasonal efficiency (SEDBUK)	%	90.3	90.3	90.2
Central heating installation				
Heating water temperature	°C	40 - 80		
ΔT at residual head of 200 mbar	K	<20		
Max. operating overpressure of boiler	bar	3.0		
Volume heat exchanger heating circuit	l	1.0		
Pipe connections				
Gas		G½" (outside) / R½" (inside)		
Heating water		G¾" (device) / Ø 22 mm (accessory)		
Condensate-water outlet	mm	Ø 21.5		
Flue gas values				
Condensate water quantity, natural gas, 40/30 °C	l/h	0.7	1.3	1.6
pH value of condensate water		approx. 4.1		
Flue gas mass-flow rate Full load Part-load	 g/s g/s	 4.9 2.2	 8.4 4.3	 10.6 4.3
Flue gas temperature, full load Heating curve 75/60 °C Heating curve 40/30 °C	 °C °C	 75 50	 85 55	 95 55
Flue gas temperature, part-load Heating curve 75/60 °C Heating curve 40/30 °C	 °C °C	 65 40	 70 45	 70 45
CO_2 full load, natural gas standard test gas G20	%	9.2		
CO_2 full load, natural gas standard test gas G31 propane	%	10.3		
Standard emission factor CO	mg/kWh	<22		
Standard emission factor NO_x	mg/kWh	<30		
Max. pressure drop permitted	Pa	35	60	100

Dimensions	Unit	600 Series Buderus wall-mounted condensing gas boiler		
		11R	19R	24R
Flue-gas system				
Type of flue gas connection		C_{13}, C_{33}, C_{53}		
Diameter of flue gas system	mm	60/100		
Electrical data				
Mains connection voltage	V	230		
Electrical power consumption Full/Part load	W	40/25	40/25	40/25
Electrical protection rating		IPX4D		
Boiler dimensions and weight				
Height x Width x Depth	mm	700 x 460 x 290		
Weight (without casing)	kg	23.5	23.5	23.5
Casing	kg	5.5	5.5	5.5

7.2 Short list of spare parts

The following are parts commonly required due to damage or expendability. Their failure or absence is likely to affect safety or performance of this appliance. For a pictorial representation of the part see the respective position number on the exploded view pictures on page 10.

Pos.	Art. no.	Description
10	75131	Casing complete
20	75130	Door
30	38470	Ventilation cover
40	38092	Bracket
50	77465	Concentric adaptor
60	38496	Clip adaptor
70	77464	Lipring 100 mm
80	73366	Fan
90	73565s	Sealing fan / venturi (set of 5 pieces)
	73566s	Sealing ventilator (set of 5 pieces)
100	73563	Lipring 60 mm
110	73743	Flue gas pipe
120	73630	Condensate collector
130	73579	Seal flue gas pipe
140	73376	Flue gas sensor
150	75969	Condensate trap
160	73573	Suction pipe
170	73574	Lipring 50 mm
180	73278	Gas valve
190	38355	Rectifier
200	73567	Venturi 11 kW
200	73568	Venturi 19-24 kW
210	76680	Gas pipe
220	76681	Gas service valve
230	75968s	Pipe return-flow top (set of 2 pieces)
240	75970	Pipe connection
	75971	Drain pipe condensate trap
250	38602s	Clip sanitary pipe (set of 5 pieces)
260	75966	Return pipe
270	75967	Drain cock
280	73583	Connection return
290	38352	Sensor
300	75965	Flow pipe
310	73581	Connection supply
320	73582s	Hairpin heat exchanger (set of 2 pieces)
330	38618	Automatic air vent
340	73580s	O-ring (set of 10 pieces)
350	73584s	Lipring (set of 2 pieces)
360	38323	Safety sensor
370	38478s	Sealing ring (set of 10 pieces)
380	73611	Backpart heat exchanger
390	73578	Seal heat exchanger
400	73514	Insulation backpart heat exchanger
410	73593	Burner 11 kW
410		Burner 19 kW
410	73594	Burner 24 kW
420	73571s	Sealing burner (set of 5 pieces)

Pos.	Art. no.	Description
430	73612	Heat exchanger helix
440	73587	Combustion divider
450	73513	Insulation front heat exchanger
460	73610	Frontpart heat exchanger
470	38009	Sight glass
470	73576	Sight glass
480	75132s	Fasteners (set of 2 pieces)
490	38324	UBA
500	38340	Mains switch
510	78105	Hot surface ignitor
520	38320	Ionisation electrode
530	73367	Cable fan
540	78109	Cable harness
560	78079	RTH converter 230V
550	-	Frame
	78110	Kim 163 (11 kw)
	78111	Kim 164 (19 kw)
	78112	Kim 165 (24 kw)
	36404s	Plate screw (set of 10 pieces)
	36406s	Screw 6x5/8" (set of 5 pieces)
	38456	Seal ventilation cover
	38458s	Assembly casing block (set of 2 pieces)
	38460s	Casing clamp (set of 5 pieces)
	38462s	Air seal bush (set of 5 pieces)
	38463s	Air seal bush (set of 4 pieces)
	38474s	Clip CH tank (2) / clip sensorhousing (2)
	38475s	Clip (set of 5 pieces)
	73591s	O-ring condensate trap (set of 5 pieces)
	79058s	Pull relief (set of 5 pieces)
	79084s	Sealing ring (set of 2 pieces)
	75300	Thermomanometer
	73572s	Screw M5 (set of 10 pieces)
	73054	Bracket ionisation electr. and glow ignitor
	73515	Insulation divider
	73560	Cap
	73586s	Seal
	73053	Clip suction pipe
	73570	Gas air supply
	73056s	Clip (set of 5 pieces)
	73368s	Sealing ignitor (set of 10 pieces)
	73488s	Gasket (set of 5 pieces)
	73569s	Sealing venturi / gasket
	75301	230V cable
	75882	Swivel dreg with pinchring
	73561	Sealing

8 Reports

8.1 Start-up report

- Please check off the start-up tasks carried out and enter the corresponding readings.

Initial start-up tasks	Remarks or measurement readings
1. Note down gas characteristics: Wobbe index Operating heat value	 _____ kWh/m^3 _____ kWh/m^3
2. Inspect to check for leaks (See section 2.1.1 on page 20)	☐
3. Check combustion air/flue gas connection (See section 2.1.3 on page 21)	☐
4. Checking the boiler equipment (change to another type of gas if necessary) (See section 2.1.4 on page 21)	☐
5. Carry out adjustment settings (See section 2.1.5 on page 22)	☐
6. Measure the gas connection pressure (flow pressure) (See section 2.1.7 on page 23)	_____ mbar
7. Checking and adjusting the gas/air -ratio CO_2-content: at full load at part load (See section 2.1.8 on page 23)	_____ Pa _____ % _____ %
8. Leak test in operational condition	☐
9. Measure carbon monoxide content (CO), vacuum (See section 2.1.9 on page 24)	_____ ppm
10. Function testing Measuring the ionisation current (See section 2.1.10 on page 24)	☐ _____ µA
11. Fit the boiler casing	☐
12. Instruct the user. Fill in Benchmark log book. Hand over documentation. (See section 2.1.11 on page 25)	☐
13. Confirm initial start-up Confirmation of initial start-up by qualified service technician (Company stamp, signature)	

8.2 Inspection and maintenance reports

The inspection and maintenance reports provide an overview of all the tasks and operations carried out.

See also Section 3: "Inspection“ on page 26 or Section 4: "Maintenance“ on page 27.

Please check off the inspection and/or requirement-related maintenance tasks carried out and enter the corresponding readings.

- Sign details of inspection and maintenance tasks, indicating date carried out.

Use only original replacement parts.

Inspection tasks	Date: _____	Date: _____
1. Check general state of system	☐	☐
2. Visual inspection and function check of system	☐	☐
3. Check gas- and water-bearing components for: - leaks; - signs of corrosion; - signs of ageing.	☐	☐
4. Take system out of service and check the burner, heat exchanger and siphon for signs of dirt and soiling. (See section 4.1.1 on page 27)	☐	☐
5. Check the burner, hot surface ignitor and ionisation electrode, after disconnecting the system. (See section 4.1.1 on page 27)	☐	☐
6. Measuring the ionisation current (See section 2.1.10 on page 24)	_____ µA	_____ µA
7. Measure the gas connection pressure (flow pressure) (See section 2.1.7 on page 23)	_____ mbar	_____ mbar
8. Check the gas-air ratio (See section 2.1.8 on page 23)	_____ Pa	_____ Pa
9. Gas leak test in operational condition (See section 2.1.1 on page 20)	☐	☐
10. Measure the carbon monoxide content (CO), vacuum (See section 2.1.9 on page 24)	_____ ppm	_____ ppm
11. Pressure-testing of heating system: - admission pressure of expansion tank (see installation instructions supplied with expansion tank) - Filling pressure	_____ mbar _____ mbar	_____ mbar _____ mbar
12. Check ventilation and flue gas conduits for correct functioning and safety	☐	☐
13. Check requirement-related adjustment settings of control device (see documentation supplied with control device)	☐	☐
14. Final check of inspection tasks, with record kept of measurement readings and test results	☐	☐
15. Confirm inspection carried out by qualified service engineer and fill out the **Benchmark** Company stamp / Date / Signature)		

Date: _____	Date: _____	Date: _____	Date: _____	Date: _____
☐	☐	☐	☐	☐
☐	☐	☐	☐	☐
☐	☐	☐	☐	☐
☐	☐	☐	☐	☐
☐	☐	☐	☐	☐
_____ µA	_____ µA	_____ µA	_____ µA	_____ µA
_____ mbar	_____ mbar	_____ mbar	_____ mbar	_____ mbar
_____ Pa	_____ Pa	_____ Pa	_____ Pa	_____ Pa
☐	☐	☐	☐	☐
_____ ppm	_____ ppm	_____ ppm	_____ ppm	_____ ppm
_____ mbar _____ mbar	_____ mbar _____ mbar	_____ mbar _____ mbar	_____ mbar _____ mbar	_____ mbar _____ mbar
☐	☐	☐	☐	☐
☐	☐	☐	☐	☐
☐	☐	☐	☐	☐

Requirement-related maintenance tasks	Date: _____	Date: _____
1. Clean heat exchanger, burner and condensate trap (See section 4.1 on page 27)	☐	☐
2. Check and adjust the gas-air ratio CO_2-content: at full load at part load (See section 2.1.8 on page 23)	_____ Pa _____ % _____ %	_____ Pa _____ % _____ %
3. Confirm servicing work Confirmation of servicing carried out by qualified technician Company stamp, signature)		

Date: _____	Date: _____	Date: _____	Date: _____	Date: _____
☐	☐	☐	☐	☐
_____ Pa _____ % _____ %	_____ Pa _____ % _____ %	_____ Pa _____ % _____ %	_____ Pa _____ % _____ %	_____ Pa _____ % _____ %

Notes

spares & parts online IBASIS.CO.UK

Notes

spares & parts online IBASIS.co.uk

Boulter Buderus

Heating system specialist:

Boulter Buderus Ltd.
Magnet House

30 Whitehouse Road
Ipswich
Suffolk, IP1 5JA
Telephone: 01473 241555
Fax: 01473 241321/463411

http://www.boulter-buderus.co.uk
e-mail: info@boulter-buderus.co.uk

721.229A - 4066 - 05/2004

spares & parts online IBASIS.CO.UK

Users manual

Wall-mounted condensing gas boiler

Buderus 600 - 11R / 19R / 24R

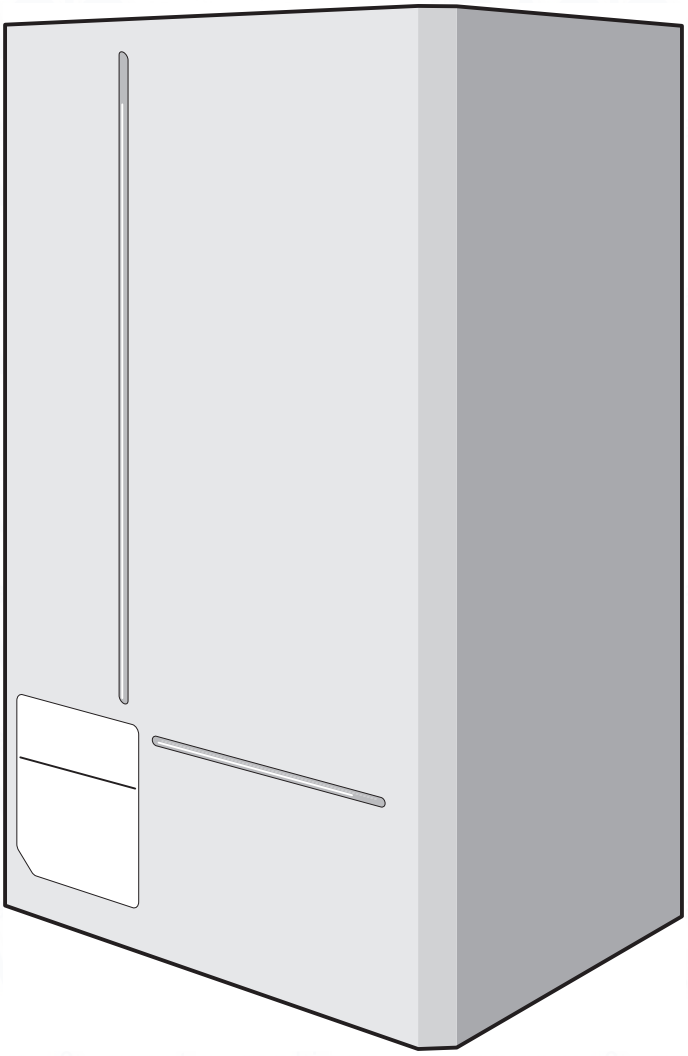

Buderus

Preface

Introduction

Please read these instructions and follow them carefully for a safe and economical use of your boiler.

Important general instructions for use

This device should only be used for its intended purpose and in accordance with the operating instructions.
It is the law and in your own interest, and that of safety that this boiler must be installed by a CORGI registered installer, in accordance with the relevant requirements of the current Gas Safety (Installation and Use) Regulations, The Building Regulations, current I.E.E. Wiring Regulations and the relevant British Standard Codes of Practice.

The device may only be used in combination with the units, accessories and spare parts listed in the installation and servicing instructions.
Other combinations of units, accessories and consumables are only to be used if they completely fulfil the specifications involved, and if system performance and safety are not affected in any way.

Subject to technical modifications

As a result of our policy of constant development, there may be small differences with respect to illustrations, functional steps and technical data.

G. C. Aplliance No. :

Buderus 600 - 11R	41-110-21
Buderus 600 - 19R	41-110-22
Buderus 600 - 24R	41-110-23

Dear Customer,

Your Buderus **600 Series** wall-mounted condensing gas boiler has been designed and built in accordance with state-of-the-art technological standards and the recognised safety rules. Special focus has been placed on operator convenience in this respect.

Carefully read the safety instructions and operating manual to ensure safe, economic and ecologically beneficial use of the unit.

Due to the high efficiency of the boiler a plume of water vapour may form at the terminal during operation. This is normal.

1 Safety precautions

DANGER!
If you smell gas:

1. **No naked flames ! Do not smoke !**
2. **Avoid sparks !**
   Do not operate electrical switches.
   Do not use the telephone, plug-in devices of any kind or the doorbell!
3. **Shut off the main gas supply!**
4. **Open windows and doors!**
5. **Warn building occupants and evacuate the building!**
6. **Call TRANSCO (under 'GAS' in the telephone directory) from outside the building!**

NOTE
In the event of any other type of incident, shut off the main gas supply and electricsupply to the appliance and seek assistance from a CORGI registered engineer.

2 Installation area / boiler room

DANGER!
The air intake and outlet openings must not be reduced in size or closed.

DANGER!
Do not store or use inflammable materials or liquids near the heating boiler.

NOTE
To prevent the boiler from being damaged, care must be taken not to contaminate the combustion air with halogenated hydrocarbons (e. g. contained in aerosol sprays, solvents, detergents, paints, and adhesives), or with high quantities of dust. The room in which the boiler is installed must be frost-proof and be well ventilated.
This appliance must not be operated without the casing fitted and forming an adequate seal.
If the boiler is installed in a compartment then the compartment must not be used for storage purposes.

3 Working in the heating system

DANGER !
Only a CORGI registered Engineer is to be entrusted with the installation of this boiler, the gas supply and the flue connection.
Commissioning, Servicing and any Repairs must be carried out by a competent person ie: a CORGI Registered Engineer.
All CORGI Registered Installers carry a CORGI identification card and have a registration number. Both should be recorded in your boiler logbook. You can check if your installer/engineer is registered by telephoning 01256 372300 or by writing to:
CORGI, 1 Elmwood, Chineham Business Park, Crockford Lane, Basingstoke. RG24 8WG

NOTE
It is mandatory to clean and service the system once a year ! This includes an inspection of the entire system to see if it is in full working order. Any faults and defects found in the course of inspection must be rectified immediately.

It is recommended to enter into a service contract with a specialist company.

4 Electricity supply

This boiler must be earthed.

A mains supply of 230 V - 50Hz is required.

Connection must be made in a way that allows complete isolation of the electrical supply such as a double pole switch, having a 3 mm 1/8") contact seperation in both poles, serving only the boiler and system controls. Alternatively, a 3-pin unswitched socket may be used. The means of isolation must be accessible to the user after installation.

5 Functions of the system and operating instructions

The installer should familiarize the user with the functions and operation of the heating system and ensure that a complete set of technical documentation is supplied.

6 Maintenance

The appliance should be serviced at least once a year by a CORGI registered installer.

7 Cleaning

For normal cleaning simply dust with a dry cloth.

To remove stubborn marks and stains, wipe with a damp cloth and soap and finish off with a dry cloth.

DO NOT use abrasive cleaning materials.

8 Initial start-up

8.1 Operation of the boiler

8.1.1 Access to the control unit

- Press the window to open the access panel of the control unit see fig 1.

8.1.2 Lighting and shutting down the boiler.

- Press the mains switch (see fig 2, item 1) on the control unit to "**I**" to light the boiler.
- Press the mains switch to "**0**" to shut down the boiler.

8.1.3 Frost hazard

In the event of any risk of the heating system freezing up, you must keep the pump switched on.

8.1.4 Temperature-setting adjustments

- Set flow temperature at the control unit (fig. 2, item 2) (see table 1).
- Adjust room temperature to maximum setting at the control unit.
- Push the mains power switch (fig. 2, item 1) to "**I**". The boiler runs through the start-up programme and the burner is ignited after approx. 30 seconds.
- Adjust room temperature to desired setting at the control unit.

NOTE
Knob pos. 3 in fig. 2 is used for service purposes only.

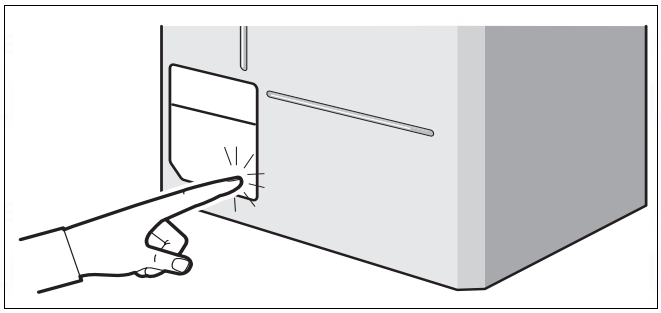

Fig. 1 Open the window of control unit

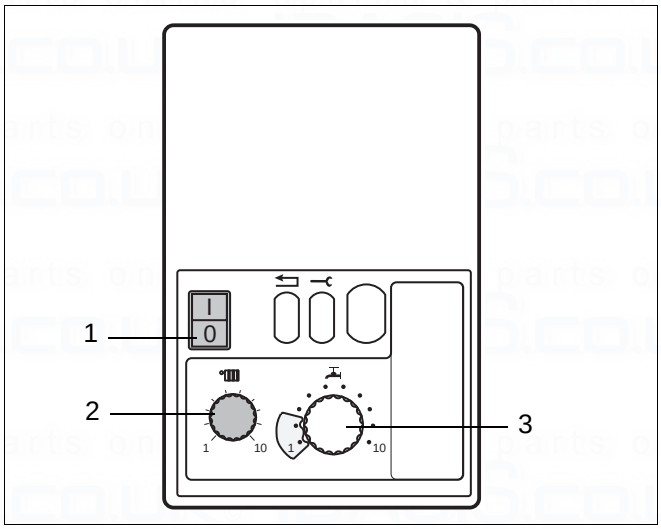

Fig. 2 Control panel

Control unit	Range of application	Controller position / boiler flow temperature
230 V temperature controller	Floor heating Radiator heating	3 (48 °C, max. factory-adjusted setting for floor heating) 7 (67 °C, min. factory-adjusted setting for radiator heating)
ON/OFF temperature controller, 24 V	Radiator heating	5 (58 °C, new building) up to 10 (80 °C, old building)*

* Basic setting: Have the specific system settings of the Buderus control system and burner-control unit control panel adjusted by a specialist heating system company.

Table 1 Flow temperature

8.2 Operational and fault codes (table 2)

Operating conditions and possible faults are shown on the display (fig. 3, item 3). The codes consists of two characters. Press the Service button (fig. 3, item 2) to display the second character.

- All codes not contained in table 2 should be noted down separately. These are malfunctions that require the presence of a specialist technician.

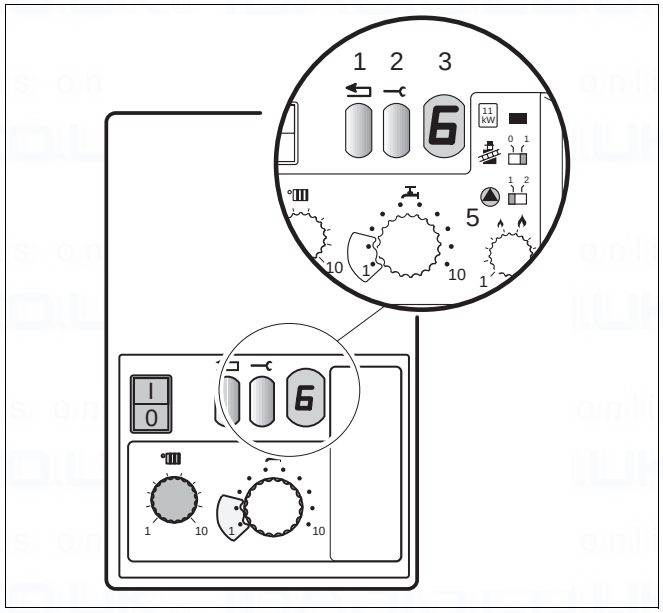

Fig. 3 Operational and fault codes

Display	Display after pressing the service button	Meaning	Rectification
0	A, H, L, P, U, Y	Boiler is ready for operation	
6*	A	Burner not ignited	Press reset button (fig. 3, item 1). If the burner fails to ignite after several unblocking operations, consult a specialist company.
–.	H	Normal heating mode	

* Flashing after three start-up attempts.

Table 2 Operational and fault codes

8.3 Combustion fuels

Natural gas, propane.

8.4 Condensate drain

The condensate drain must not be modified or blocked.

Blockage of the condensate drain, caused by debris or freezing can cause automatic shutdown of the boiler.

To remedy the problem seek the assistance of a Corgi registered installer.

spares & parts online IBASIS.CO.UK

spares & parts online IBASIS.CO.UK

Boulter Buderus

Heating system specialist:

Boulter Buderus Ltd.
30 Magnet House
Whitehouse Road
Ipswich
Suffolk, IP1 5JA
Telephone: 01473 241555
Fax: 01473 241321/463411

http://www.boulter-buderus.co.uk
e-mail: info@boulter-buderus.co.uk

721.230A - 4066 - 05/2004

spares & parts online IBASIS.CO.UK