Installation and servicing instructions

Wall-mounted condensing gas boiler 600 - 11S / 19S / 24S / 24C

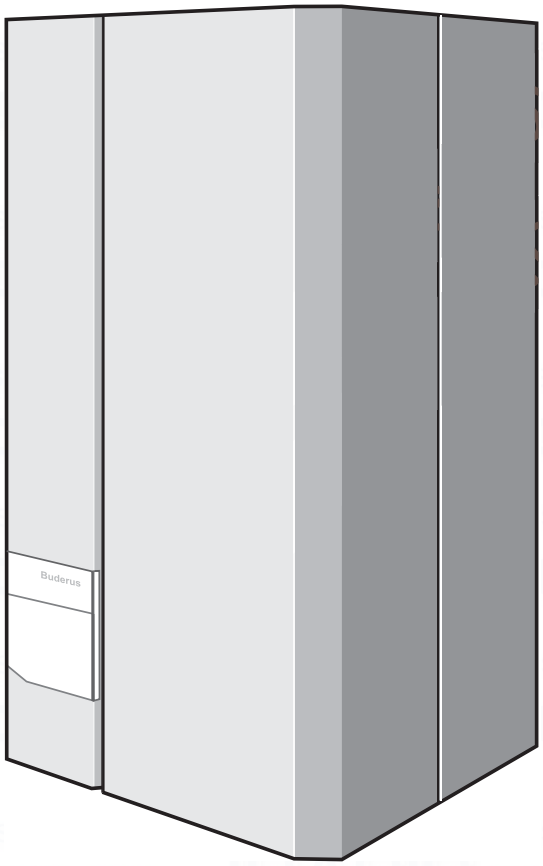

benchmark™

Buderus

Please read thoroughly before installing or servicing

spares & parts online IBASIS.CO.UK

The boiler meets the basic requirements of the appropriate standards and directives.

Conformity has been substantiated by the proper documents which - together with the declaration of conformity - are filed with the manufacturer.

Buderus
HEIZTECHNIK

Konformitätserklärung

Declaration of conformity

Déclaration de conformité

Wir
We
Nous

Buderus Heiztechnik GmbH, D-35576 Wetzlar

erklären in alleiniger Verantwortung , dass das Produkt
declare under our responsibility that the product
déclarons sous notre seule responsabilité que le produit

Buderus 600 Series

konform ist mit den Anforderungen der Richtlinien
is in conformity with the requirements of the directives
est conforme aux exigences des directives

Richtlinie Directive Directive		Norm Standard Norme	Identnummer Identification number Numéro d'identification
90/396/EEC	gas appliance directive	EN 483 EN 677 EN 625	CE-0085BL0159
92/42/EEC	boiler efficiency directive	-	CE-0085BL0159
73/23/EEC	low voltage directive	EN 60335	-
89/336/EEC	EMC directive	EN 55014 EN 60730-1 EN 50081-1	-

Ergänzung für Deutschland :
Supplement for Germany :
Supplément pour l'Allemagne :

- HeizAnlV vom 04.05.1998 : Brennwertkessel gemäß § 2, Abs. 8
- 1.BImSchV vom 07.08.1996 : NO_x < 80 mg/kWh (Erdgas) gemäß § 7, Abs. 2

Wetzlar, 16.06.2000

BUDERUS HEIZTECHNIK GMBH

Becker Dr. Schulte

Subject to technical modifications!

Constant development efforts may result in minor deviations in illustrations, functional steps and technical data.

Updating the documentation

If you have suggestions for improvement or have found discrepancies, please do not hesitate to contact us.

Contents

1 Installation 6
1.1 Dimensions, connections and assembly 6
1.2 Boiler assembly - exploded view 7
1.3 Flue Installation 9
1.4 Items supplied with unit 11
1.5 Hanging the boiler 11
1.6 Water circulation system 12
1.7 Pipe connections 12
1.8 Flue installation 15
1.9 Electrical connections. 17
1.10 Wiring Diagram. 18

2 Initial start-up 22
2.1 Preparing the boiler for operation. 22

3 Inspection 30
3.1 Preparing the heating boiler for inspection. 30

4 Maintenance 31
4.1 Clean the heat exchanger, burner and condensate trap 31
4.2 Flushing out the hot-water heat exchanger 35

5 Servicing 36
5.1 Operating codes 36
5.2 Fault codes. 37
5.3 Checking and replacing parts. 45

6 Changing to another type of gas 60

7 Appendix. 62
7.1 Technical specifications 62
7.2 Short list of spare parts 64

8 Reports 65
8.1 Start-up report 65
8.2 Inspection and maintenance reports 66

G. C. Apliance No. :

Buderus 600 - 11S	41-110-16
Buderus 600 - 19S	41-110-17
Buderus 600 - 24S	41-110-18
Buderus 600 - 24C	47-110-01

Preface

These installation and servicing instructions apply to:
Buderus wall-mounted condensing gas boilers
600 - 11S / 19S / 24S / 24C.

Model C_{13}, C_{33}, C_{53}

Type GB II_{2H3P} 20 mbar, 37 mbar

Power rating 230 VAC, 50 Hz, IPX4D

Fuse rating: 2.5 Ampere slow blow

Important general instructions for use

Only use the boiler in accordance with its designated use and the installation and servicing instructions. Servicing and repair must be carried out by CORGI registered installer. Only use the boiler in combinations and with the accessories and spare parts indicated in the installation and servicing instructions. Other combinations, accessories and consumables may only be used if they are expressly provided for the designated use and if system performance and safety are not affected in any way.

The boiler is suitable for connection to fully pumped, sealed water systems ONLY. Adequate arrangements for completely draining the system by provision of draining valves must be provided in the installation pipework.

Pipework from the boiler is routed downwards as standard, but may be routed upwards behind the boiler using the distance frame (supplied in a separate kit).

Subject to technical modifications.

As a result of our policy of constant development, there may be small differences between illustrations, functional steps and technical data.

BENCHMARK' Log Book

All Boulter Buderus gas fired boilers now include an installation, commissioning and service record log book. The details of the log book will be required in the event of any warranty work being requested.
Please complete the appropriate sections on completion of the installation and commissioning.

REMEMBER: Please hand the log book back to the user.

Regulations and directives

It is law that all gas appliances are installed and serviced by a CORGI registered installer in accordance with the regulations. Failure to install appliances correctly could lead to prosecution. It is in your own interest, and that of safety, to ensure the law is complied with.

The installation must also be in accordance with the latest I.E.E (**BS.7671**) Wiring Regulations, local building regulations, water regulations, the building regulations and the Building Standards (Scotland) and any relevant requirements of the local authority.

Detailed recommendations are contained in the following British Standard Codes of Practice:

BS. 5440:1	Flues (for gas appliances of rated input not exceeding 70 kW).
BS. 5440:2	Ventilation (for gas appliances of rated input not exceeding 70 kW).
BS. 5449	Forced circulation hot water systems.
BS. 5546	Installation of gas hot water supplies for domestic purposes (2nd. family Gases).
BS. 6798	Installation of gas fired hot water boilers of rated input not exceeding 60 kW.
BS. 6891	Low pressure installation pipes.
IGE/UP/1b	Tightness testing and purging domestic sized gas installations.

Health and & Safety Document No. 635.

The Electricity at Work Regulations, 1989.

The manufacturer's notes must not be taken, in any way, as overriding statutory obligations.

The design and construction of the Buderus wall-mounted condensing gas boiler 600 - 11S/19S/24S/24C conforms to the basic specifications listed in the European directive governing gas-fired appliances 90/396/EEC, and with respect to EN 625, EN 483 and EN 677.

NOTE
Observe the corresponding technical rules and the building supervisory and statutory regulations when installing and operating the system.

WARNING!
Keep the burner-control unit housing CLOSED when working on water-bearing components.

NOTE
It is mandatory to clean and service the system once a year. This includes an inspection of the entire system to see if it is in full working order. Defects and faults must be eliminated immediately.

NOTE
When instructions aren't followed, warranty expires.

Timber Framed Buildings

If the boiler is to be fitted in a timber framed building it should be fitted in accordance with the Institute of Gas Engineering document **IGE/UP/7:1998.**

Bathroom Installations

This appliance is rated IPX4D.

The boiler may be installed in any room or internal space, although particular attention is drawn to the requirements of the current IEE (**BS.7671**) Wiring Regulations and, in Scotland, the electrical provisions of the building regulations applicable in Scotland, with respect to the installation of the boiler in a room or internal space containing a bath or shower.

If the appliance is to be installed in a room containing a bath or shower then, providing water jets are not going to be used for cleaning purposes (as in communal baths/showers), the appliance can be installed in Zone 3, as detailed in **BS.7671**.

Compartment Installations

A compartment used to enclose the boiler should be designed and constructed especially for this purpose.

An existing cupboard or compartment may be used, provided that it is modified for the purpose.

In both cases, details of essential features of cupboard/ compartment design, including airing cupboard installation, are to conform to the following:
BS 6798 (No cupboard ventilation is required - see 'Air Supply' for details).

It is not necessary to have a purpose-provided air vent in the room or internal space in which the boiler is installed. Neither is it necessary to ventilate a cupboard or compartment in which the boiler is installed, due to the low surface temperatures of the boiler casing during operation; therefore the requirements of **BS 6798**, **Clause 12**, and **BS 5440:2** may be disregarded.

The position selected for installation MUST allow adequate space for servicing in front of the boiler.

For the minimum clearances required for safety and subsequent service, see the wall mounting template.
In addition, sufficient space may be required to allow lifting access to the wall mounting plate.

Wall-mounted condensing gas boilers must only be operated with the combustion air/flue gas systems especially devised and authorised for this type of boiler.

Observe the relevant standards, regulations and legislation of the country of final use.

CAUTION
Use this device for its intended purpose only.

DANGER!
Notes relating to the heating system water.

Thoroughly flush the system before it is filled with water. Use only untreated water or water treatment product such as Sentinel X100 to fill and top up the system.

When using water treatment, only products suitable for use with Boulter Buderus heat exchangers are permitted (e.g. Sentinel X100). Your warranty is at risk if an incorrect water treatment product is used in conjunction with this appliance. For more information, contact Boulter Buderus Product Support Department.

It is most important that the correct concentration of the water treatment product is maintained in accordance with the manufacturer's instructions.

If the boiler is used in an existing system any unsuitable additives MUST be removed by thorough cleaning. **BS.7593:1992** details the steps necessary to clean a domestic central heating system.

In hard water areas, treatment to prevent lime scale may be necessary - however, the use of artificially softened water is NOT permitted.

Under no circumstances should the boiler be fired before the system has been thoroughly flushed.

Do not use water softened in a salt bedding exchanger.

Do not use inhibitors, anti-freeze or other additives.

The expansion vessel must be of sufficient size.

When oxygen-permeable pipes are used (e. g. for floor heating systems) the system must be separated by means of heat exchangers. Unsuitable heating water promotes sludge formation and corrosion. This may cause malfunctions and damage in the heat exchanger.

NOTE:
Notes relating to domestic hot water.

- The domestic hot water service must be in accordance with **BS 5546** and **BS 6700**.
- The boilers are suitable for connection to most types of washing machine and dishwasher appliances.
- When connecting to suitable showers, ensure that:
  a. The cold inlet to the boiler is fitted with an approved anti-vacuum or syphon non-return valve.
  b. Hot and cold water supplies to the shower are of equal pressure.
- Where the water hardness exceeds 150 mg/litre, it is recommended that a proprietary scale reducing device is fitted into the boiler cold supply with the requirements of the local water company.

CAUTION
Provision must be made to accommodate the expansion of DHW contained within the appliance, if a non-return valve is fitted to the DHW inlet, as detailed in **BS. 67989: §5.4.3**.

Safe handling of substances

Care should be taken when handling the boiler's insulation, which can cause irritation to the skin.

No asbestos, mercury or CFCs are included in any part of the boiler and its manufacture.

1 Installation

1.1 Dimensions, connections and assembly

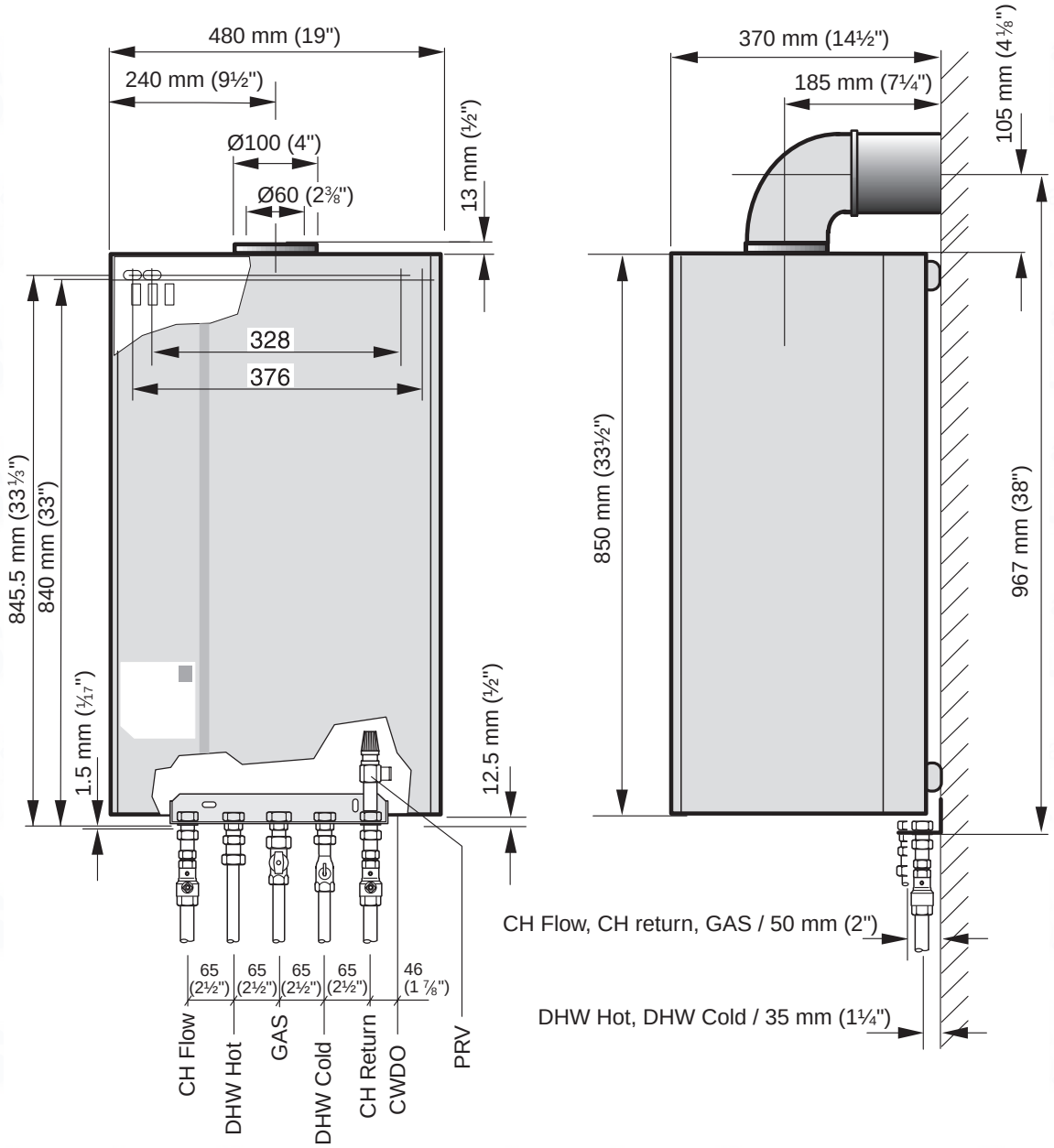

CH Flow	=	CH flow R¾"
GAS	=	Gas connection G½"
CH return	=	CH return R¾"
CWDO	=	Condensate water drainage outlet
DHW Hot	=	DHW warm out R½"
DHW Cold	=	DHW cold in R½"
PRV	=	Pressure relief valve R¾" (¾" - ½"-adapter supplied with boiler)

NOTE
See wall-mounting template for the necessary clearances.

1.2 Boiler assembly - exploded view

Single unit (11S / 19S / 24S)

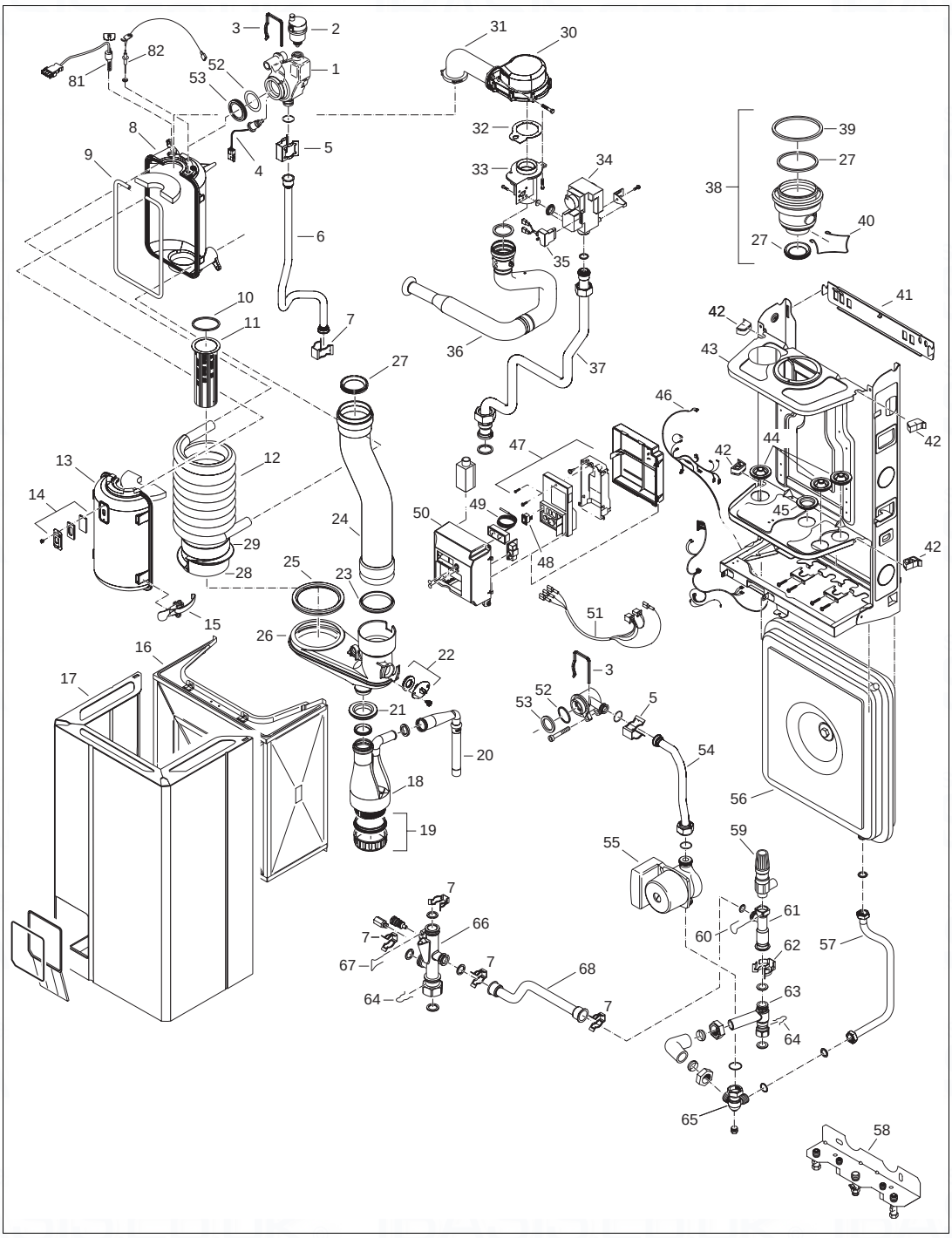

Legend

1. *Flow connection piece*
2. *Automated air vent*
3. *Hairpin heat exchanger*
4. *Flow sensor*
5. *Clip*
6. *Flow pipe*
7. *Clip flow pipe*
8. *Back part heat exchanger*
9. *Seal heat exchanger*
10. *Sealing ring burner*
11. *Burner*
12. *Heat exchanger*
13. *Front panel heat exchanger*
14. *Sight glass*
15. *Fastener*
16. *Ventilation cover*
17. *Casing*
18. *Syphon*
19. *Syphon cap with seal*
20. *Drain pipe*
21. *Sealing ring*
22. *Flue gas sensor*
23. *Sealing ring*
24. *Flue gas pipe*
25. *Flue gas pipe seal*
26. *Condensate collector*
27. *Lipring*
28. *Combustion divider*
29. *Insulation divider*
30. *Fan*
31. *Gas/air supply pipe*
32. *Fan seal*
33. *Venturi*
34. *Gas valve*
35. *Rectifier*
36. *Suction pipe*
37. *Gas pipe*
38. *Concentric adapter*
39. *Lip ring*
40. *Adapter clip*
41. *Bracket*
42. *Cable duct*
43. *Ventilation cover seal*
44. *Pipe duct*
45. *Sealing ring*
46. *Cable harness*
47. *UBA*
48. *Power switch*
49. *Temp-pressure gauge*
50. *UBA panel*
51. *230V cable*
52. *O-ring*
53. *O-ring*
54. *Return pump connection pipe*
55. *Pump*
56. *Expansion vessel*
57. *Expansion vessel pipe*
58. *Manifold assembly*
59. *Pressure relief valve*
60. *Spring set*
61. *Connection house by-pass*
62. *Clip by-pass*
63. *Connection house three-way valve*
64. *Spring set*
65. *Connection housing pump*
66. *Connection housing*
67. *Clip*
68. *By-pass pipe*
81. *Hot surface ignitor*
82. *Ionisation electrode*

Combi unit (24C)

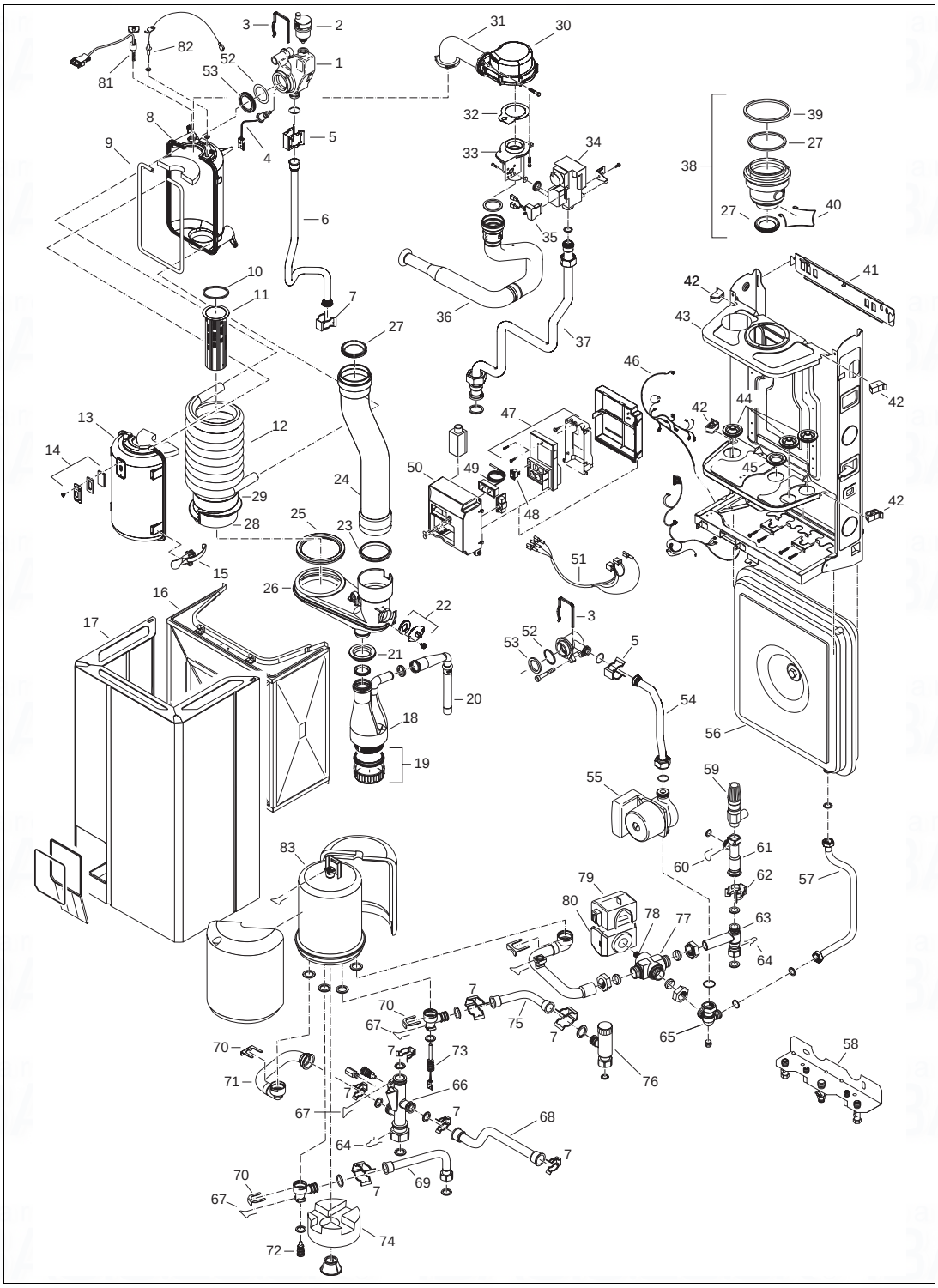

Legend

1. *Flow connection piece*
2. *Automated air vent*
3. *Hairpin heat exchanger*
4. *Flow sensor*
5. *Clip*
6. *Flow pipe*
7. *Clip flow pipe*
8. *Back part heat exchanger*
9. *Seal heat exchanger*
10. *Sealing ring burner*
11. *Burner*
12. *Heat exchanger*
13. *Front panel heat exchanger*
14. *Sight glass*
15. *Fastener*
16. *Ventilation cover*
17. *Casing*
18. *Syphon*
19. *Syphon cap with seal*
20. *Drain pipe*
21. *Sealing ring*
22. *Flue gas sensor*
23. *Sealing ring*
24. *Flue gas pipe*
25. *Flue gas pipe seal*
26. *Condensate collector*
27. *Lipring*
28. *Combustion divider*
29. *Insulation divider*
30. *Fan*
31. *Gas/air supply pipe*
32. *Fan seal*
33. *Venturi*
34. *Gas valve*
35. *Rectifier*
36. *Suction pipe*
37. *Gas pipe*
38. *Concentric adapter*
39. *Lip ring*
40. *Adapter clip*
41. *Bracket*
42. *Cable duct*
43. *Ventilation cover seal*
44. *Pipe duct*
45. *Sealing ring*
46. *Cable harness*
47. *UBA*
48. *Power switch*
49. *Temp-pressure gauge*
50. *UBA panel*
51. *230V cable*
52. *O-ring*
53. *O-ring*
54. *Return pump connection pipe*
55. *Pump*
56. *Expansion vessel*
57. *Expansion vessel pipe*
58. *Manifold assembly*
59. *Pressure relief valve*
60. *Spring set*
61. *Connection house by-pass*
62. *Clip by-pass*
63. *Connection house three-way valve*
64. *Spring set*
65. *Connection housing pump*
66. *Connection housing*
67. *Clip*
68. *By-pass pipe*
69. *DHW pipe (hot)*
70. *Clip*
71. *DHW supply pipe*
72. *Hot water sensor*
73. *Boiler sensor*
74. *Insulation hot water tank*
75. *DHW pipe (cold)*
76. *Flow regulator*
77. *Three-way valve body*
78. *Three-way valve cartridge*
79. *Three-way valve cover*
80. *Three-way valve head*
81. *Hot surface ignitor*
82. *Ionisation electrode*
83. *Hot water tank*

1.3 Flue Installation

1.3.1 Siting the flue terminal

The flue must be installed in accordance with the recommendations of **BS. 5440-1:2000**.

Pluming will occur at the terminal so terminal positions where this could cause a nuisance should be avoided.

The air supply and the flue gas exhaust must meet the applicable general regulations. Please consult the instructions provided with the flue terminal kits prior to installation.

The boiler MUST be installed so that the terminal is exposed to external air.

It is important that the position of the terminal allows the free passage of air at all times.

Minimum acceptable spacing from the terminal to obstructions and ventilation openings are specified in table 1.

If the terminal is fitted within 1000 mm of a plastic or painted gutter or within 500 mm of painted eaves, an aluminium shield of at least 1000 mm long should be fitted to the underside of the gutter or painted surface.

If the lowest part of the terminal is less than 2 metres above the level of the ground, balcony, flat roof or place to which any person has access, the terminal must be protected by a guard. Protective guards are available from Quinnell Barrett and Quinnell, Old Kent Road, London.

Ensure that the guard is fitted centrally.

The flue assembly shall be so placed or shielded as to prevent ignition or damage to any part of the building.

The air inlet/products outlet duct and the terminal of the boiler MUST NOT be closer than 25 mm (1") to combustible material. Detailed recommendations on the protection of combustible material are given in **BS. 5440- 1:2000**.

NOTE
It is absolutely essential to ensure, in practice, that products of combustion discharging from the terminal cannot re-enter the building or any other adjacent building through ventilators, windows, doors, other sources of natural air infiltration, or forced ventilation/air-conditioning.

If this could occur the appliance MUST be turned off (with the owners permission), and labelled as unsafe until corrective action can be taken.

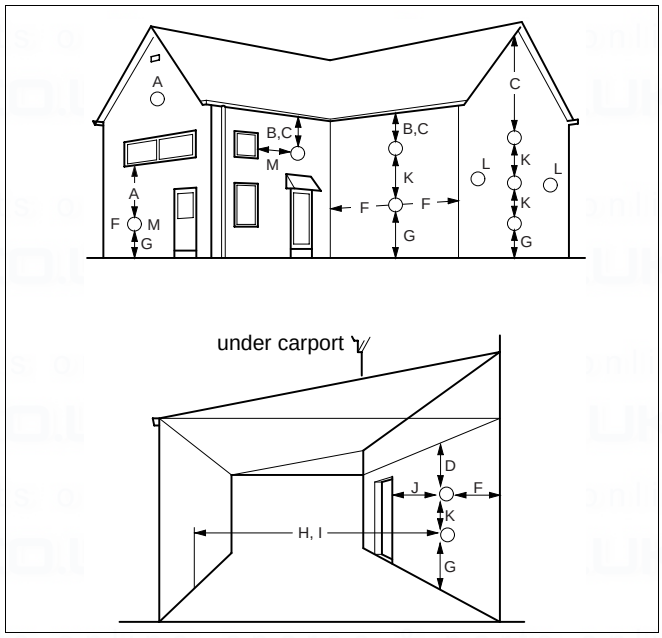

Fig. 1 Flue terminal position

Terminal Position	Minimum Spacing
A. Directly below or alongside an opening window, air vent or other ventilation opening	300 mm (12")
B. Below guttering, drain pipes or soil pipes	75 mm (3")
C. Below eaves	200 mm (8")
D. Below balconies or a car port roof	200 mm (8")
E. From vertical drain pipes or soil pipes	150 mm (6")
F. From internal or external corners	300 mm (12")
G. Above adjacent ground, roof or balcony level	300 mm (12")
H. From a surface facing the terminal	600 mm (24")
I. From a terminal facing a terminal	1200 mm (48")
J. From an opening in a car port (e.g. door or window) into dwelling	1200 mm (48")
K. Vertically from a terminal on the same wall	1500 mm (60")
L. Horizontally from a terminal on the wall	300 mm (12")
M. Adjacent to opening	300 mm (12")

Table 1 Balanced flue terminal position

1.3.2 Air supply and flue gas exhaust in a closed installation

A ventilation cover is integrated into the 600 Series condensing gas boilers. This cover houses a number of components, such as the burner and the heat exchanger. Since this ventilation cover is part of the air supply system, it is vital that it is always installed correctly.

To ensure optimal operation, the 600 Series appliances must be connected to a Buderus wall-mounted or roof-mounted flue terminal. These terminals have been developed specifically for the 600 Series condensing gas boilers and have been comprehensively tested. The Buderus wall and roof-mounted flue terminal kits ensure trouble-free operation.

The following items for the flue (see fig. 2) are included in the delivery of the boiler:

– pos. 1: 1 Concentric bend 60/100;

– pos. 2: 1 Horizontal flue terminal 60/100;

– pos. 3: 1 Flue finishing kit.

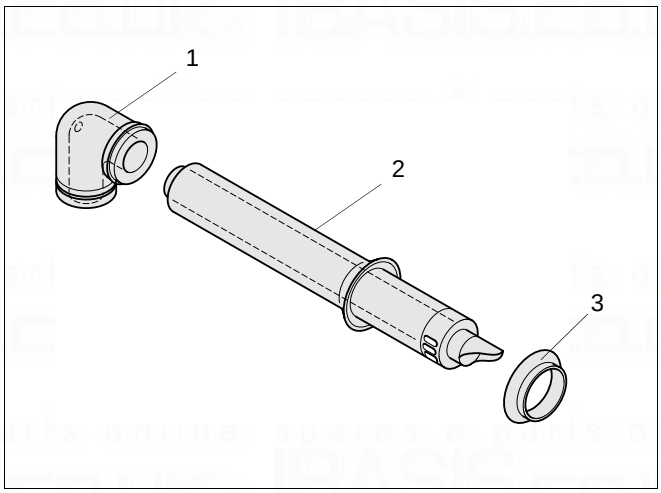

Fig. 2 Horizontal flue pack

1.3.3 Maximum Flue length

The maximum pipe length of the air supply and flue gas exhaust pipes for the 600 Series condensing gas boilers (see table 2) is determined by the total pressure loss of all components in the flue gas exhaust / air supply system.

Flow pressure available for use [Pa]				
600 Series	**11 S**	**19 S**	**24 S**	**24 C**
	35	60	100	10

Take the flue conduit clearances into account when planning the layout of the place of installation (see subsection 1.3.1: "Siting the flue terminal" on page 9).

Maximum wall thickness without extensions is 550 mm. Maintain a minimum side wall clearance of 50 mm (see fig. 3).

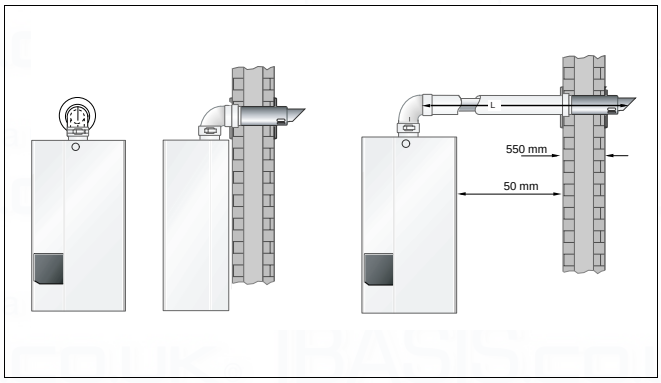

Fig. 3 Side flue and rear flue installation

Boiler	Maximum pipe length	For every 90° bend the maximum pipe length has to be reduced by
600 Series	L = 7.5 m	1.2 m

Table 2 Pipe length

1.3.4 Additional flue parts

Additional flue parts (see table 3) can be ordered from your supplier.

Flue parts	Order No.
Concentric pipe, 500 mm long, adjustable	NE 83703
Concentric pipe, 1000 mm long, not adjustable	NE 83704
Concentric bend 90°	NE 83705
Concentric bend 45°	NE 83706

Table 3 Additional flue parts

1.4 Items supplied with unit

- Check the contents against the packing list to ensure that nothing is missing.

Requirements to be met by the place of installation

NOTE
Observe all statutory building regulations applying to the place of installation.

DANGER!
Inflammable materials or liquids must not be stored or used near wall-mounted condensing gas boilers. The site of installation must be frost-protected.

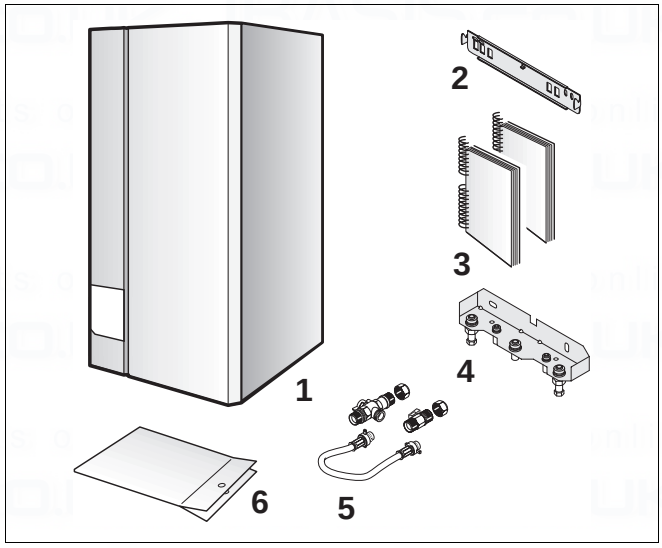

Fig. 4 Items supplied with unit

Key to fig. 4:

1: *Wall-mounted condensing gas boiler*

2: *Wall bracket*

3: *Technical documents*

4: *Manifold assembly*

5: *Filling loop*

6: *Plastic bag containing the following accessories:*
4 x wall fixing-screws
4 x wall plugs
4 x washers
Seals (1 x 1“, 2 x ¾“, 2 x ½“)
Square wrench
Initial start-up sticker
Second identification plate
Safety valve nipple (from ¾“ to ½“)

1.5 Hanging the boiler

CAUTION
DO NOT remove the polystyrene foam bottom slab protecting the connection nozzles. During installation work, cover the wall-mounted condensing gas boiler and the flue gas adapter to prevent site dirt from entering, e. g. using aluminium foil.

- Attach the manifold assembly to the wall (see fig. 5, item 1).
- Attach the pipes.
- Attach the wall bracket.
- When using a stand-off frame, refer to the manual of the stand-off frame for the correct mounting instructions.
- Loosen the retaining screw on the bottom of the condensing gas boiler.
- Detach the outer casing of the condensing gas boiler.
- Hang the condensing gas boiler onto the wall bracket (fig. 5).

NOTE
If the boiler isn't connected to the pipework immediately, place caps on the pipe connections.

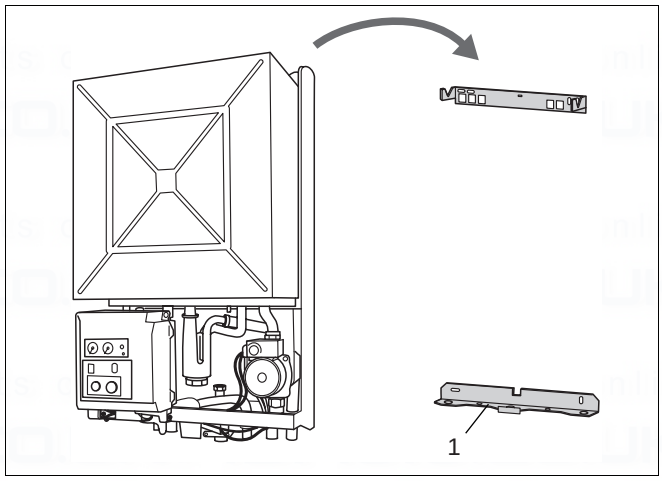

Fig. 5 Installation

1.6 Water circulation system

The central heating system should be in accordance with **BS.6798** and, in addition, for smallbore and microbore systems, **BS.5449**.

1.7 Pipe connections

Pipework from the boiler is routed downwards as standard, but may be routed upwards behind the boiler using the stand-off frame (supplied in a separate kit).

- Connect pipes as shown in fig. 6. Ensure that all pipework is routed so as to minimise any strain on the boiler fittings.

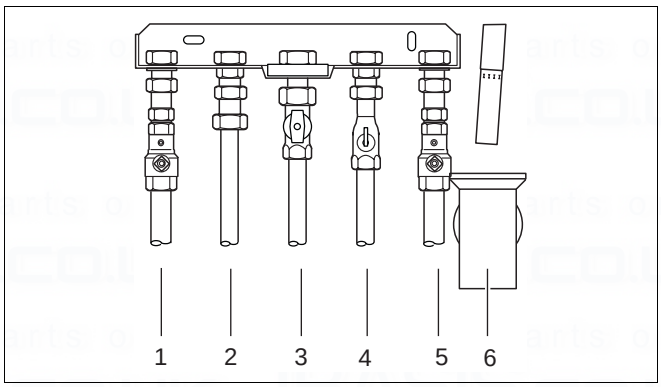

Fig. 6 Pipe connections

Key to fig. 6:

1: *CH flow*

2: *DHW warm out (combi only)*

3: *Gas*

4: *DHW cold in (combi only)*

5: *CH return*

6: *Condensate trap*

1.7.1 Gas Supply

The gas installation must be installed in accordance with **BS6891**.

CAUTION!
Pipework from the meter to the boiler MUST be of adequate size.

The complete installation MUST be tested for gas tightness and purged as described in **IGE/UP/1b**.

1.7.2 Gas connection

- Connect to gas supply according to relevant standards, installing a screw-threaded gas shutoff valve (accessory) to the gas supply system.

1.7.3 Hot-water temperature for 600 - 24C

CAUTION
DO NOT use galvanised pipes or fittings. The hot water heat exchanger is made of copper and is liable to suffer the effects of electrolytic corrosion.

NOTE
When using plastic pipes, observe the supplier's instructions - especially those referring to recommended jointing techniques and the notes relating to the heating system water on page 5.

- Fit a non-shutting diaphragm safety valve (max. 8 bar) upstream of the cold-water inlet. This is not required if the building is equipped with a pressure regulator configured to guarantee that the maximum supply pressure of 10 bar cannot be exceeded.
- Connect pipes free of tension (fig. 6).

1.7.4 Condensate drain

A condensate drain is integrated in the boiler. The drain outlet is a standard (21.5 mm) overflow pipe. This drain needs to be connected to a drainage point. All pipework and fittings in the condensate drainage system MUST be made of plastic - no other materials may be used.
The routing of the drain must be made to allow a minimum fall of 1 in 20 away from the boiler, throughout its length.
Excessive external pipe runs should be avoided in order to prevent possible freezing.
Any external pipework should be a minimum of 32 mm internal diameter.

WARNING!
Any external run must be insulated.

Ensure that the condensate trap is filled with water.

1.7.5 Condensate removal

Positioning and termination of the condensate drain pipe

The condensate pipe should be run and terminate internally to the house soil and vent stack or waste pipe. Alternatively, the condensate can be discharged into the rainwater system, or into a purpose-made soak away (condensate absorption point).
All connecting drainage pipework should have a fall of at least 2.5° to the horizontal, or approximately 50 mm per metre of pipe run.
If the drainage pipe has to be run externally, it is recommended that the pipe be insulated to protect against frost.
It should be noted that the connection of a condensate pipe to a drain may be subject to local building controls.

Material for condensate

The condensate drainage pipe should be run in a standard drain pipe material, e.g. PVC (polyvinyl chloride), PVC-U (unplasticized polyvinyl chloride), BS (acrylonitrile-butadienestyrene), PP (polypropylene polyprolene) or PVC-C (cross-linked polyvinyl chloride).

Any internal pipework should be of a diameter to match the requirements of the condensate exit pipe on the appliance. A 32 mm (1¼") waste pipe solvent weld fitting can be used, fitted externally over the condensate exit pipe on the appliance.
All external pipework should be kept to a minimum to avoid freezing and should have a diameter of not less than 22 mm.

Internal termination to internal stack

The condensate drainage pipe should have a minimum diameter of 22 mm with no length restriction. It should incorporate a trap with a 75 mm condensate seal and be connected to the stack at a point at least 450 mm above the invert of the stack. The trap built into the boiler will provide this 75 mm condensate seal. For all internal and external stack connections a second trap is required to prevent any odours emanating from the condensate air break at the boiler (see fig. 7).

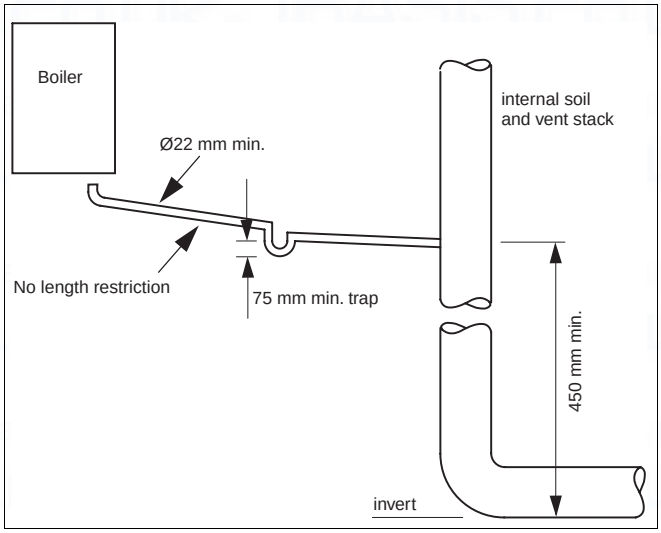

Fig. 7 Internal termination of condensate drainage pipe to internal stack

External termination via internal branch (e.g. sink waste)

The condensate drainage pipe should have a minimum diameter of 22 mm with no length restriction and should incorporate a trap with a 75 mm seal. The connection should preferably be made downstream of the sink waste trap. If the connection is only possible upstream, then the air break is needed between the two traps. This is normally provided by the sink waste pipe (see fig. 8 and fig. 9).

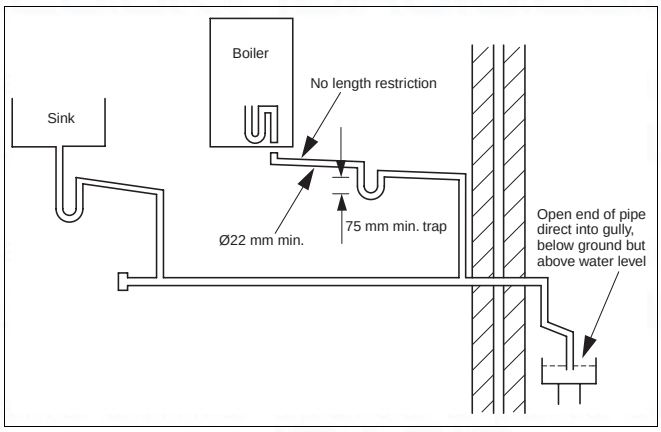

Fig. 8 External termination of condensate drainage pipe via internal discharge branch (e.g. sink waste) and condensate siphon

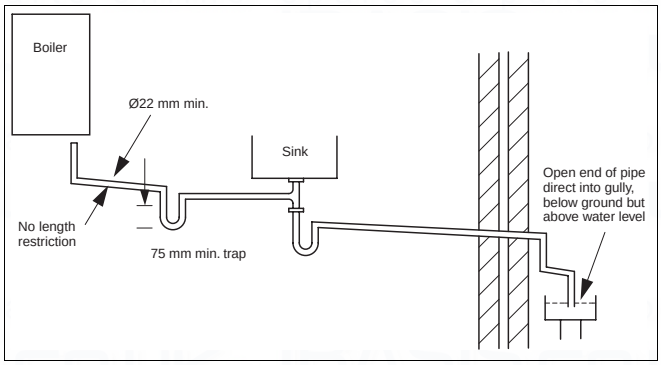

Fig. 9 External termination of condensate drainage pipe via internal discharge branch (e.g. sink waste – proprietary fitting) and condensate siphon

Condensate absorption point

The condensate drainage pipe should have a minimum diameter of 22 mm and the external pipe length should not be more than 3 m. The condensate absorption point should be sited in a convenient position as close as possible to the boiler but not in the vicinity of other services.
See fig. 10 for information.

NOTE
When discharging condensate to an outside drain caution must be taken to ensure blockage cannot occur during freezing conditions. If this is likely to occur, the use of a siphon trap is recommended.

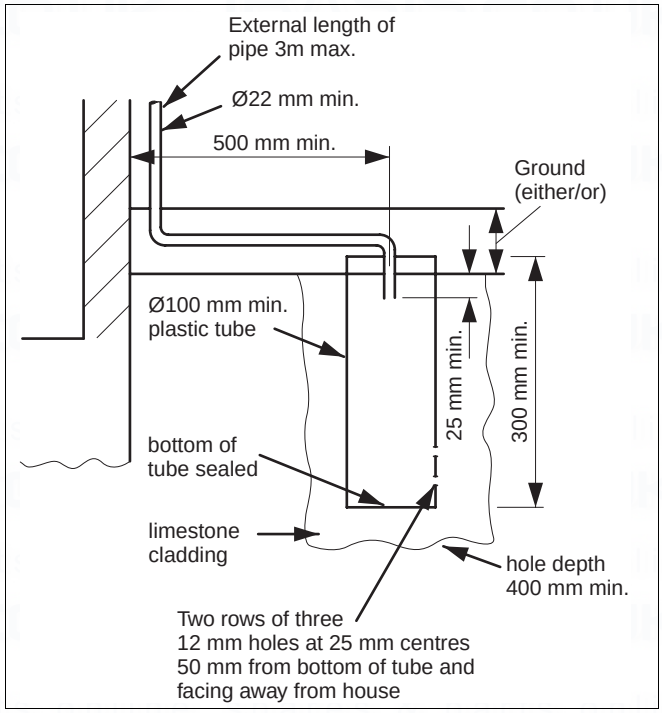

Fig. 10 External termination of condensate drainage pipe to absorption point

1.8 Flue installation

The only flue systems that may be used are those supplied by Boulter Buderus. The flue system must be installed in accordance with the requirements of **BS5440:1. 2000**.

Standard 100 mm flue systems

The standard concentric flue system provides for a max. horizontal straight length of upto 7.5 m (see subsection 1.3.3). Full instructions for fitting this flue are in subsection 1.8.2: "Installation of the horizontal flue" on page 16.

IMPORTANT
Any horizontal flue system fitted to a condensing boiler must be incline towards the appliance at an angle of 3% (30 mm per metre length) to prevent condensate dripping from the flue terminal.
This means that the clearance above the appliance must be increased to match the duct length. See figure on page 6.

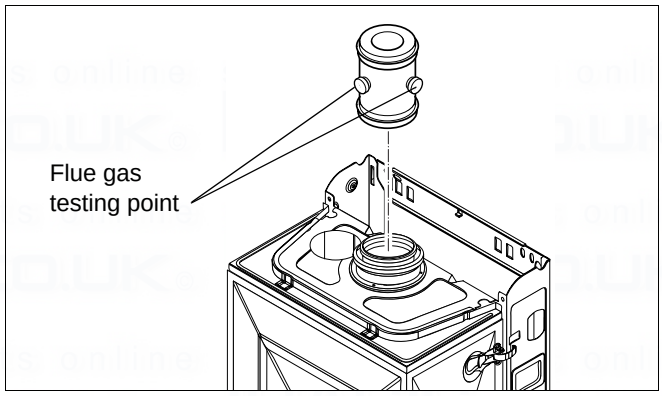

Fig. 11 Vertical flue connection

NOTE
When using a stand-off frame, don't forget to take its measurements into account when designing a flue system.

1.8.1 Connecting the vertical flue gas duct

- Fit the vertical flue gas duct (fig. 11) onto the appliance flue connector.
- For remaining installation of the vertical flue assembly, refer to the relevant installation instructions.

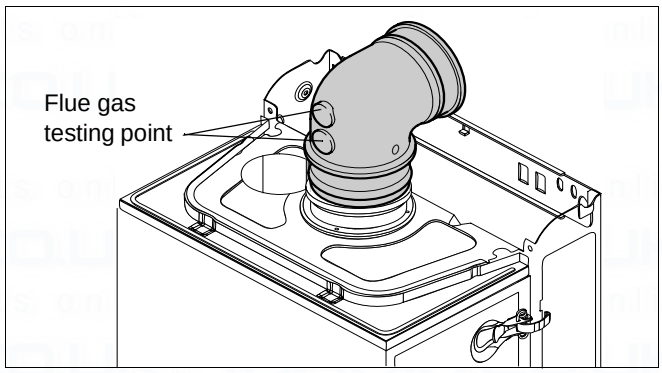

Fig. 12 Elbow with flue gas testing point

1.8.2 Installation of the horizontal flue

The standard 100 mm diameter horizontal flue system is suitable for lengths upto 560 mm (see fig. 13).
For longer flue runs upto 7.5 m, extension air/flue ducts are available (see page 10, table 3).

NOTE
Use the wall-mounting template to help you mark the position of the side flue opening

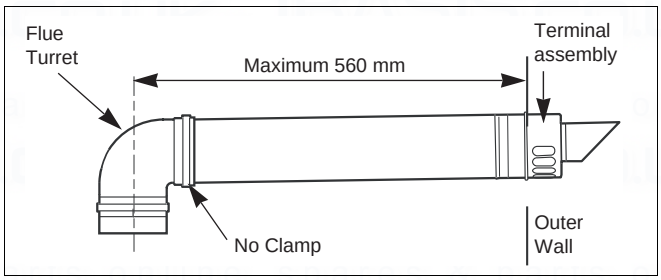

Fig. 13 Standard flue

1.8.3 Flue duct preparation and assembly

- Measure the flue length L. Refer to figures 14 and 15.

NOTE
The flue must be inclined to the boiler.

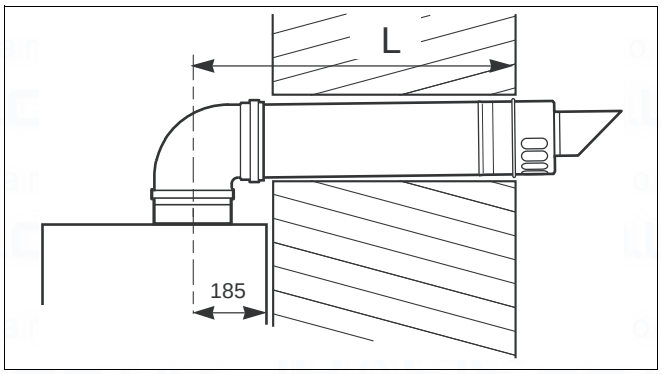

Fig. 14 Flue length - rear

- Mark of the lengths shown onto the ducts and cut the length. The cuts must be square and free from burrs. Terminal assembly outer (air) duct - L-70 mm, inner (flue) duct - L-50 mm. The measurement is made from the ridge at the terminal indicating the outer face of the wall. Refer to figure 16.
  Extension air duct - L-70 mm, flue duct - L-50 mm. The measurement is from the formed end.
- Assemble flue system completely. Push the ducts fully together. The slope of the terminal outlet must be face downwards.
  The assembly will be made easier if a solvent free grease is lightly applied to the male end of the ducts.

NOTE
An inner wall sealing plate is provided which should be fitted to the ducts before assembly.

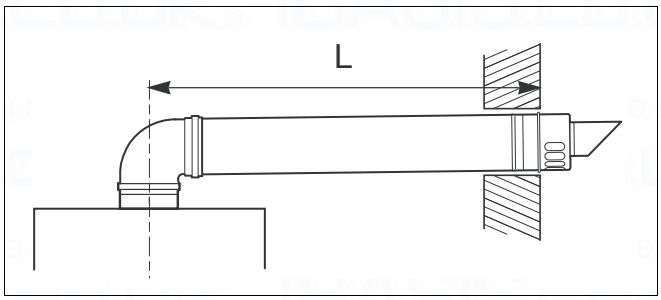

Fig. 15 Flue length - side

- Push the assembly through the wall and slide the turret onto the flue connector. Refer to figure 12.
- Ensure that the turret is fully entered into the socket on the boiler. From the outside fix the flue finishing kit to the terminal and, after ensuring the duct is properly inclined towards the boiler, fix the finishing kit to the wall.
  If the terminal is within 2 m of the ground where there is access then an approved terminal guard must be fitted. The guard must give a clearance of at least 50 mm around the terminal and be fixed with corrosion resistant screws.

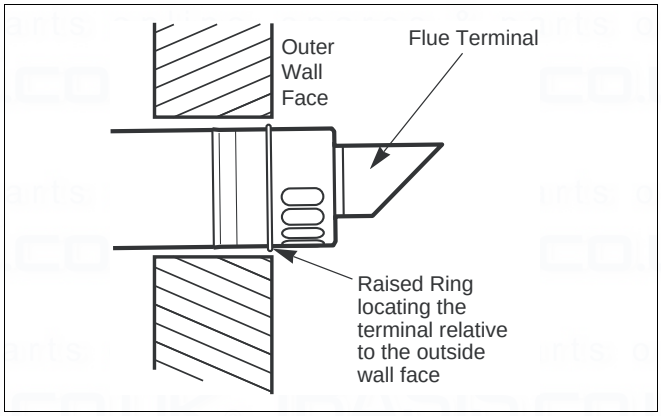

Fig. 16 Flue terminal position

1.9 Electrical connections

1.9.1 Mains connection

A mains supply of 230 V - 50Hz is required.

External controls are suitable for volt free or 230 V installation.

Wiring to the boiler MUST be in accordance with the current I.E.E. (**BS.7671**) Wiring Regulations and any local regulations.

Wiring should be a 3 core PVC insulated cable, not less than 0.75 mm^2 (24 x 0.2 mm), and to **BS.6500 Table 16**.

Connection must be made in a way that allows complete isolation of the electrical supply such as a double pole switch having 3 mm (1/8") contact separation in both poles, or a plug and socket, serving only the boiler and system controls. This boiler is equipped with a double pole switch see fig. 17, item 1. The means of isolation must be accessible to the user after installation.

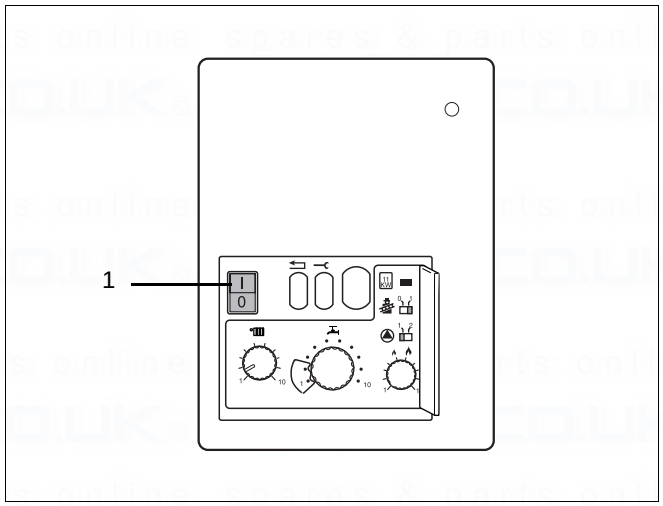

Fig. 17 UBA

The electrical connection to the mains supply should be readily accessible and adjacent to the boiler.

If the supply cord is damaged, it must be replaced by a registered Corgi installer to avoid a hazard.

The electrical supply for both the boiler and the system must be taken from the same sparred fused spur outlet.

1.10 Wiring Diagram

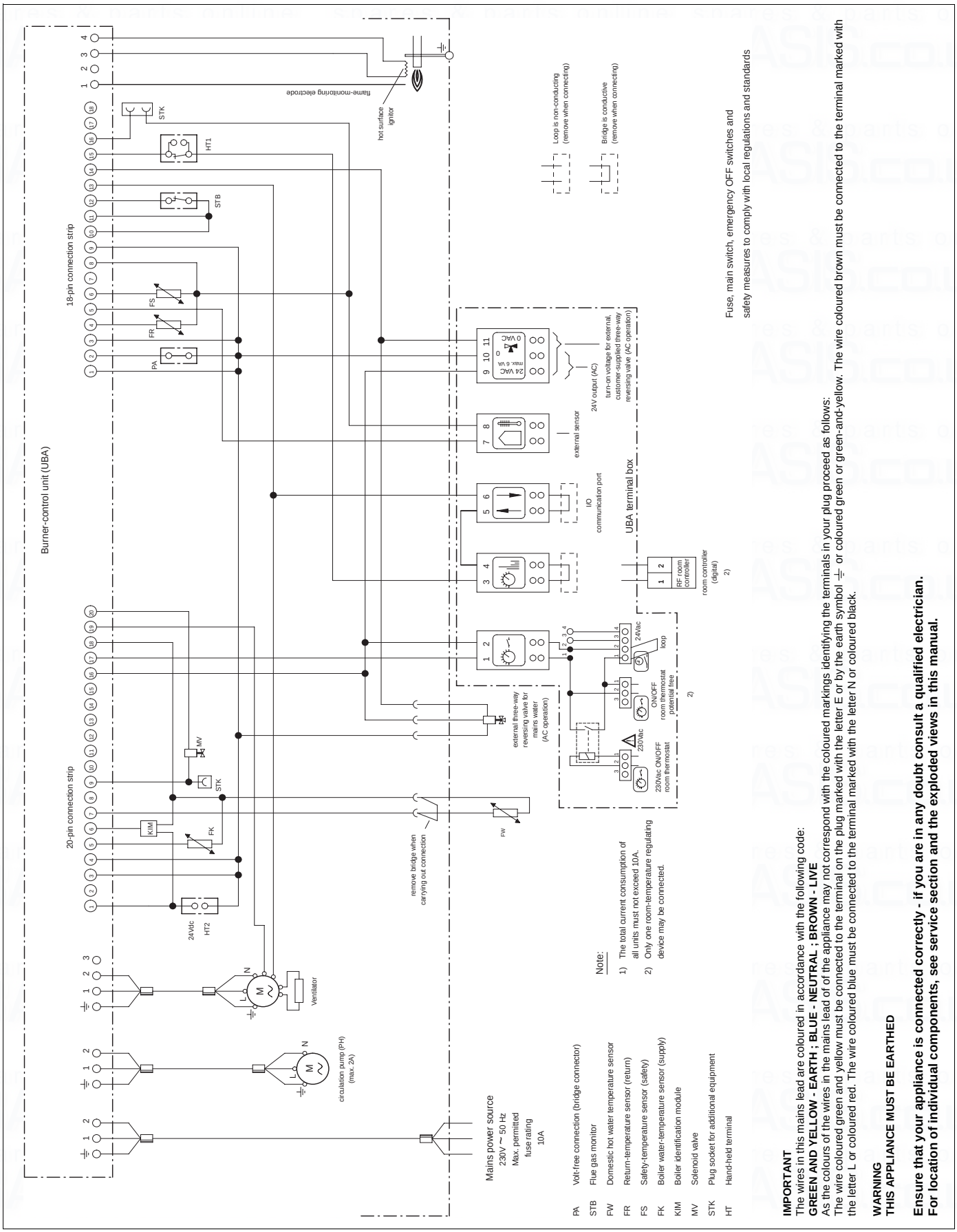

1.10.1 Regulating devices

The wall-mounted condensing gas boiler can be fitted with the following control devices:

– ON/OFF temperature controller, volt free;

– A room-temperature control device at 230V connected to the connection plate see fig. 20, item 1.

– A radio frequency room-temperature control device at 24 Volt connected to the connection plate see fig. 22, item 1.

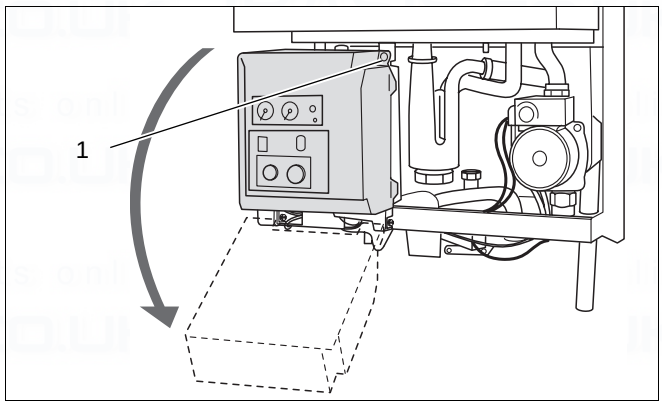

Fig. 18 Swivel the housing of the burner-control unit downwards

1.10.2 230V Room-temperature control device connection

- Loosen crosshead screw (fig. 18, item 1) on burner-control unit (UBA).
- Swivel burner-control unit downwards.
- Open the back of the burner-control unit to the right (fig. 19).

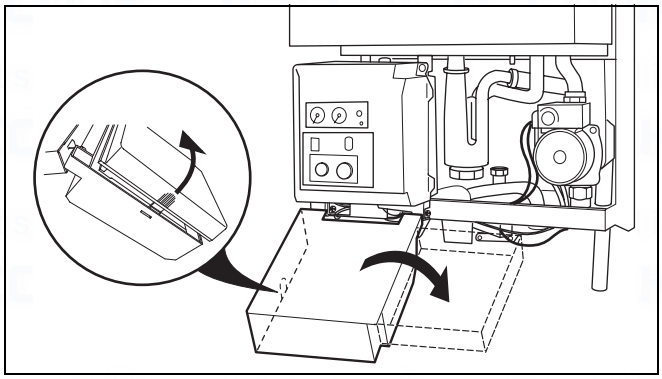

Fig. 19 Open back of the burner-control unit

- Connect the 230V room-temperature control device at fig. 20, item 1.

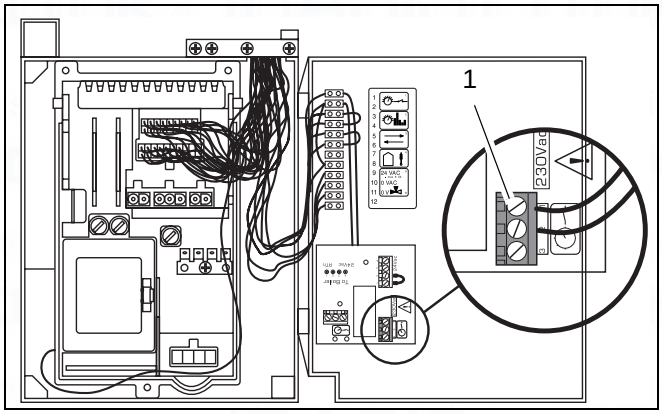

Fig. 20 Connection box in burner-control unit - 230V connection

1.10.3 Potential free room-temperature control device connection

- Loosen crosshead screw (fig. 18, item 1) on burner-control unit (UBA).
- Swivel burner-control unit downwards.
- Open the back of the burner-control unit to the right (fig. 19).
- Connect the potential free room-temperature control device at fig. 21, item 1.

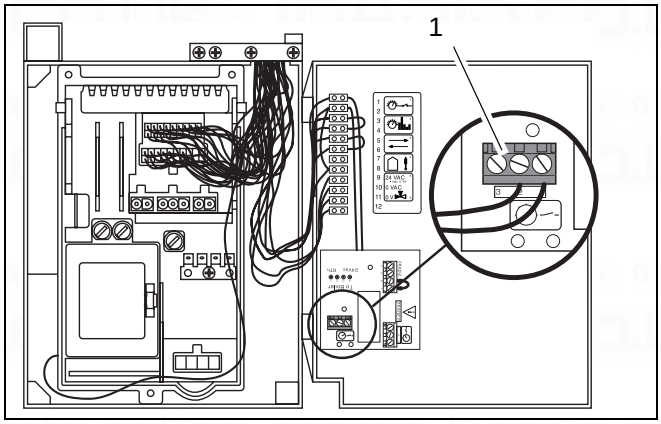

Fig. 21 Connection box in burner-control unit - potential free connection

1.10.4 24 Volt radio frequency room-temperature control device connection

- Loosen crosshead screw (fig. 18, item 1) on burner-control unit (UBA).
- Swivel burner-control unit downwards.
- Open the back of the burner-control unit to the right (fig. 19).
- Connect the 24 Volt radio frequency room-temperature control device at fig. 22, item 1.

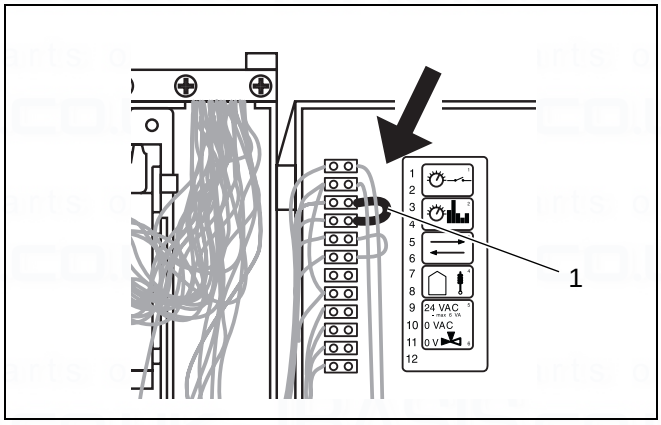

Fig. 22 Connection box in burner-control unit - 24 Volt connection

1.10.5 Other connections

Connection of an external water tank for single devices 600 - 11S/19S/24S:

- Remove bridge (fig. 23, item 1).
- Connect sensor for external water tank.

Connection for a second propane solenoid valve:

- Connect switch unit for a second solenoid valve (accessory) at green plug (fig. 23, item 2).

Connection of a modulating pump:

- Connect modulating pump (accessory) at plug (fig. 23, item 3).

Connection of an external switch contact for underfloor heating system:

- Open plug (fig. 23, item 4) connection.
- Connect underfloor heating header thermostat (volt free) and in series.

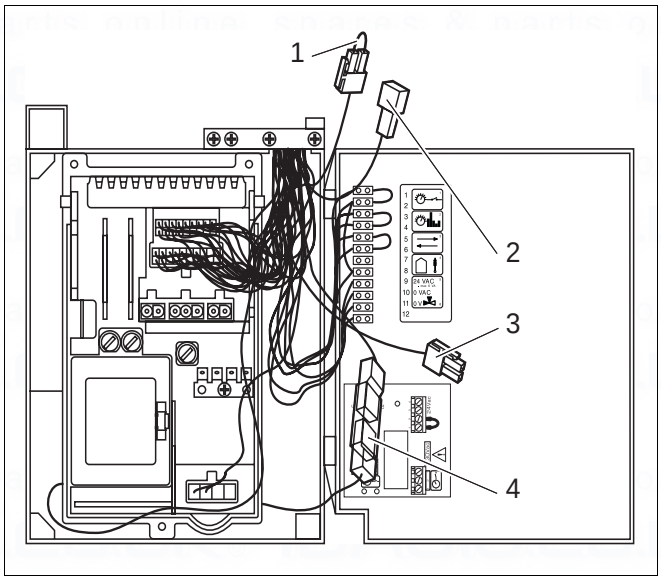

Fig. 23 Other connections

1.10.6 System example

Condensing gas boiler 600 Series
with downstream heating circuit without actuator

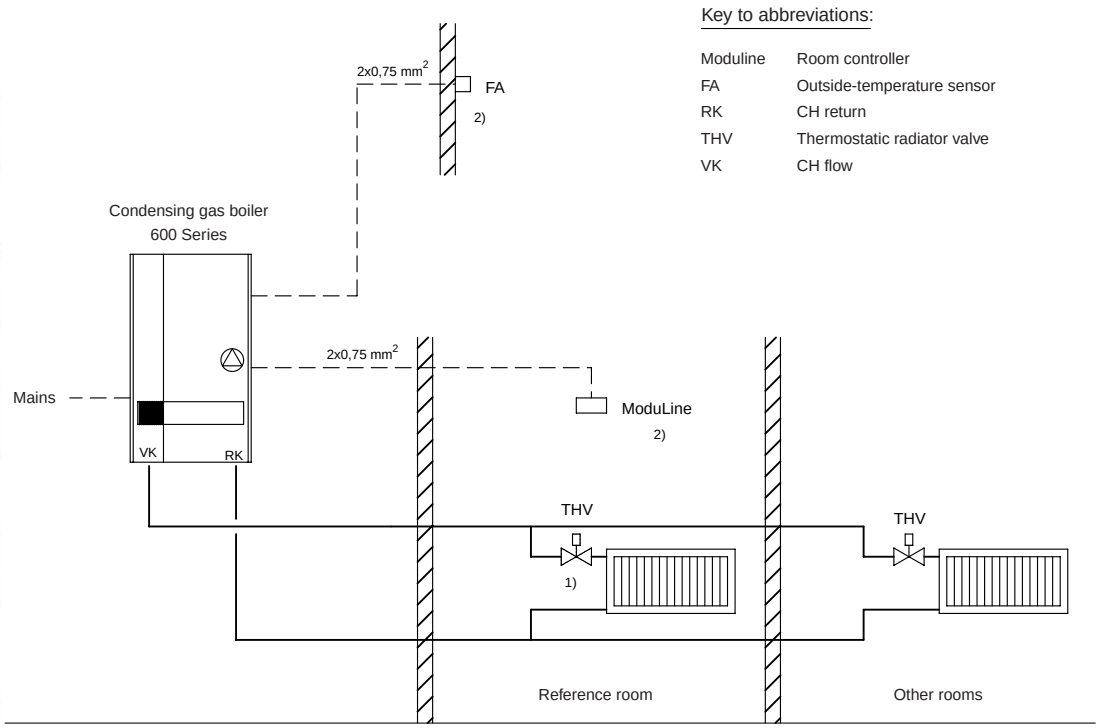

1) Thermostat valve not required or to be opened fully, if regulation is carried out via ModuLine room-temperature controlled system or outside-temperature controlled system with room-temperature correction.

2) If system is regulated via ModuLine external-temperature controlled unit.

Note that example systems are to be regarded
as schematic representations only.

Fig. 24 System example

2 Initial start-up

2.1 Preparing the boiler for operation

CAUTION
DO NOT operate the condensing gas boiler if large amounts of dust are present, e.g. due to building work in and around the place of installation.

2.1.1 Fill the heating system

WARNING
The wall-mounted condensing gas boiler must not be activated at this stage.

- Set three-way valve to the middle setting (applicable for 24C only). This is done by pushing the lever on the three-way valve (fig. 25) with a screwdriver to the middle setting.

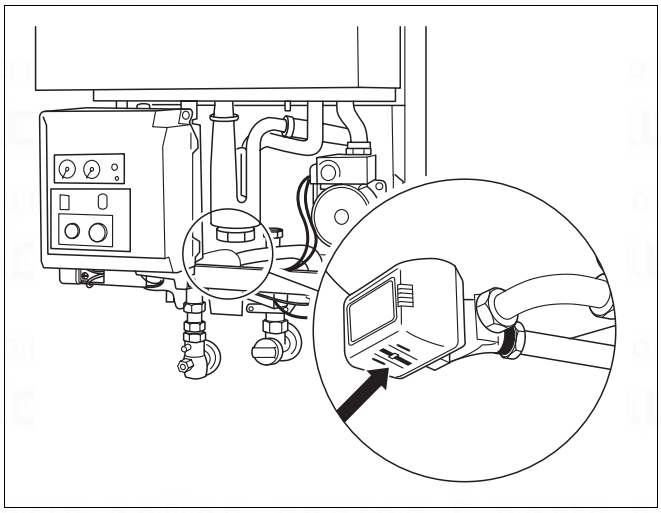

Fig. 25 Three-way valve

- If necessary open the CH flow and CH return maintenance valves (fig. 26, item 1 and 2).

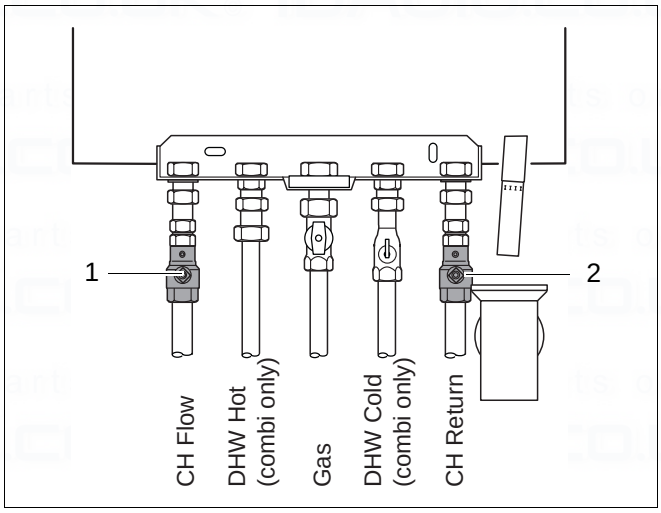

Fig. 26 Maintenance shutoff valves

- Connect temporary hose (fig. 27).
- Open both stop valves.

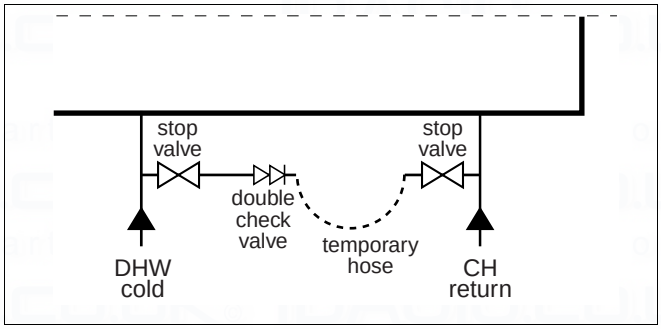

Fig. 27 Connecting temporary hose

- Fill the system to a pressure of 1.0 to 1.2 bar (fig. 28, item 1). Max. water pressure is 1.5 bar.
- Shut both stop valves and disconnect the filling loop.

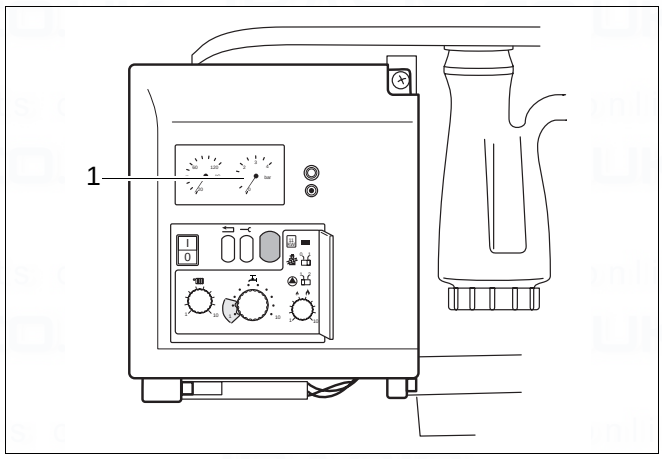

Fig. 28 Pressure display

In the case of the 600 - 24C:
Purge the hot-water circuit of air

- Bleed the hot-water heat exchanger via the vent screw on the heating-circuit side (fig. 29, item 1).
- Open the maintenance valve for the cold-water inlet.
- Leave the hot water taps open until water begins to flow freely.

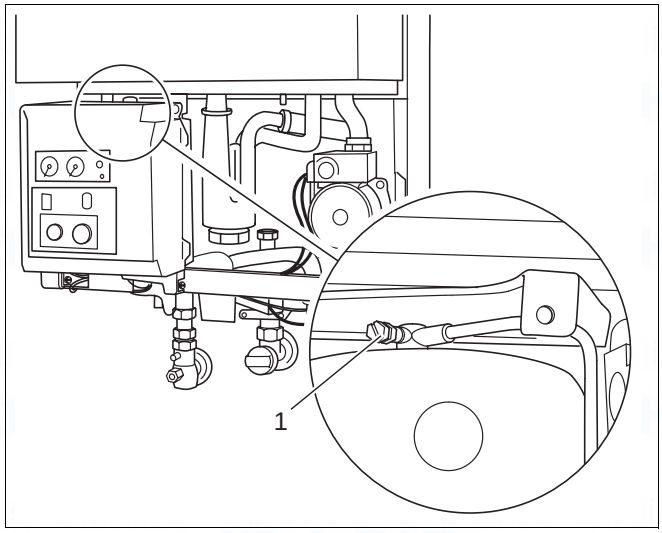

Fig. 29 Purge the hot-water heat exchanger of air (applies to type 600 - 24C only)

To drain the system take the following steps:

- Close the DHW cold and the CH return valve.
- Connect temporary hose (fig. 30).
- Open the CH return stop valve to drain the system.

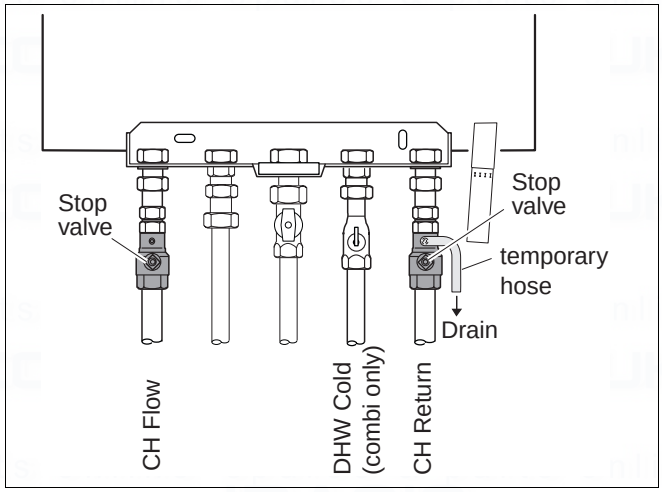

Fig. 30 Draining the system

2.1.2 Checking for leaks

- Disconnect the system from the power supply.
- Check all sections of gas pipework and connections for signs of leaks before starting up system for the first time. If a leak is detected during tightness testing, use an approved leak detector to check all connections for possible escapes.
  The product must be certified as a gas leak-testing agent. DO NOT allow the product to come into contact with electrical wiring.

2.1.3 Purging air from the gas supply system

- Close the gas service valve.
- Unscrew the sealing closure of the gas connection-pressure testing nipple by two turns (fig. 31).
- Purge system and appliance as per relevant procedures, **IGE/UP/1b**. Ensuring all safety requirements are met.
- Open the gas service valve.
- Close the gas shutoff valve once more.
- Shut the sealing closure of the test nipple once more.
- Open cover for 2nd operating level (fig. 32, item 1).
- Start boiler up and move chimney sweep switch (fig. 32, item 3) to position "**1**".

The display shows (fig. 32, item 2) " ‾." or " =." to indicate that the gas supply system is purged of air. Return chimney sweep switch to normal running position, that is position "**0**".

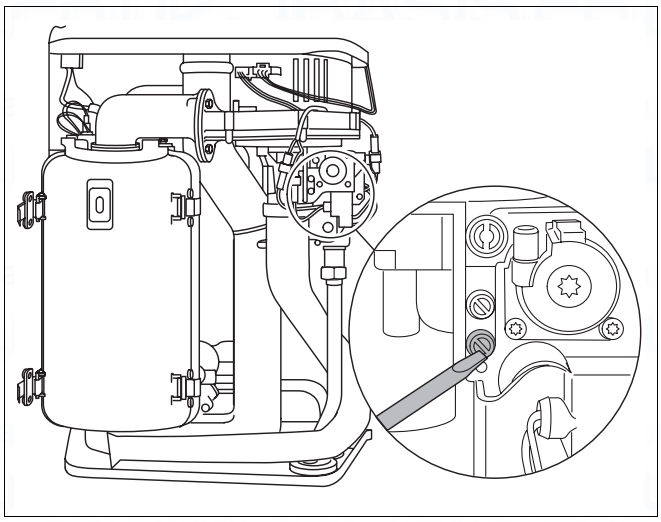

Fig. 31 Purging air from the gas supply system

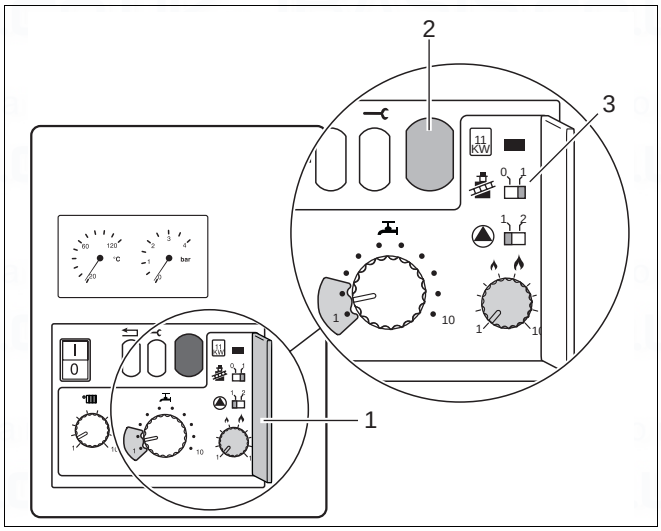

Fig. 32 Display and chimney-sweep switch

2.1.4 Check combustion air/flue gas connection

Check to ensure that the correct combustion air/flue gas system has been fitted.

Check that the instructions included in the appropriate flue gas system installation manual have been followed.

Type of gas	Factory settings of gas burners
Natural gas **E** (includes natural gas **H**)	When delivered ready for operation and set to Wobbe index 14.1 kWh/m^3 (referred to 15 °C, 1013 mbar), applicable for Wobbe index range 11.3 to 15.2 kWh/m^3. Inscription on gas-type indicating label: Category setting: G 20 - 2E_20 mbar
Propane **P**	After adaptation by a CORGI registered installer, the unit can be run on propane. Inscription on gas-type indicating label: 3P G 31_30-50 mbar

Table 4 Gas-supply types

2.1.5 Checking the type of gas and supply

CAUTION
The burner must only be put into operation with the correct nozzles (table 5).

NOTE
Observe stickers attached to Venturi tubes.

Type of gas supply	Gas nozzles ∅ [mm]		Venturi tubes
	11S	19S/24(C)	
Natural gas **E** (G20) (includes natural gas **H**)	5.55	6.5	Standard Venturi tubes
Propane **P** (G31)	3.40	4.15	Standard Venturi tubes

Table 5 Gas-nozzle diameter

Controller setting	Flow temperature [°C]	Heat-retaining temperature (only 24 C) [°C]	Outlet temperature (only 24 C) [°C]	Hot-water temperature of external tanks [°C]
1	40	-	60	27
2	44	DO NOT use setting no. 2		31
3	48	40	40	34
4	53	43	43	38
5	58	46	46	41
6	62	49	49	45
7	67	52	52	49
8	71	55	55	52
9	76	58	58	56
10	80	60	60	60

Table 6 Temperature settings

2.1.6 Adjusting the flow temperature

- Open the cover to the 2nd operating level (fig. 33, item 1).
- Adjust the knob (fig. 33, item 2) to the desired flow temperature (table 6) for your particular installation.

NOTE
Factory setting of the controller is "**10**" (around 83 °C).

2.1.7 Adjusting the hot-water temperature for 24C only

- Adjust the heat-retaining and outlet temperature (table 6) using the hot-water temperature regulator (fig. 33, item 5).

NOTE
Factory setting of the controller is "**10**".

To avoid energy losses set the controller to setting "**1**" (fig. 33, item 5). Remove the green blocking plate before making the adjustment.

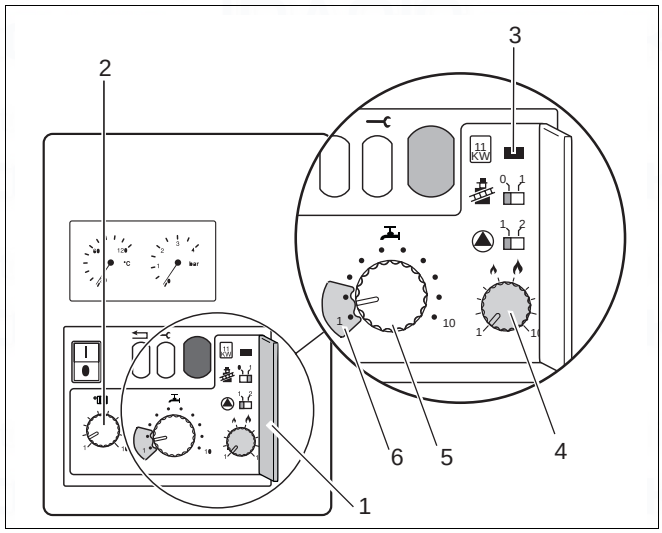

Fig. 33 Control box

Key to Fig. 33:

1: *Cover for second operating level*
2: *Flow temperature knob*
3: *Heat-capacity jumper*
4: *Heating capacity knob*
5: *Hot-water temperature knob*
6: *Green blocking plate*

2.1.8 Adjusting the hot-water temperature for external tanks

- Use the hot-water temperature regulator to adjust the temperature (fig. 33, item 5) to the desired setting table 6.

2.1.9 Adjust the hot-water flow controller (applies to combi-unit 600 - 24C only)

Adjust the hot-water flow controller (fig. 34) to the desired setting:

– To increase the flow of hot water: turn valve towards "**+**".

– To reduce the flow of hot water: turn valve towards "**-**".

NOTE
The unit is factory-adjusted to an output of 22 kW and a flow of 7 l/min

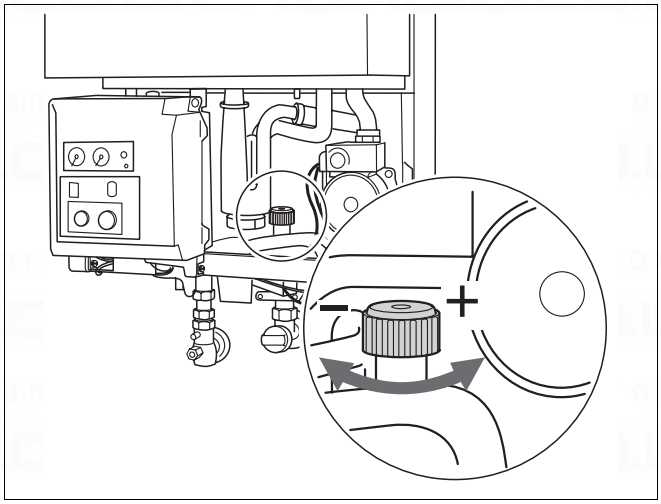

Fig. 34 Hot-water flow controller

2.1.10 Setting the heating capacity

Set the heating capacity (table 7), according to the amount of heat required, at the controller (fig. 33, item 4).

NOTE
The controller is factory-adjusted to position "**6**"

Controller setting	Heating capacity [kW] (±5 %)			
	600 - 11 S	600 - 19 S	600 - 24 S	600 - 24 C
1	4.9	9.7	9.7	9.7
2	5.6	10.7	11.3	11.3
3	6.3	11.8	12.9	12.9
4	6.9	12.8	14.5	14.5
5	7.6	13.8	16.0	16.0
6	8.3	14.9	17.6	17.6
7	9.0	15.9	19.2	19.2
8	9.6	16.9	20.8	20.8
9	10.3	18.0	22.4	22.4
10	11.0	19.0	24.0	24.0

Table 7 Heating capacity

2.1.11 Measure gas-supply pressure (flow pressure)

- Open at least one radiator thermostat valve.

CAUTION
The condensing gas boiler must not be activated at this stage.

- Turn the chimney-sweep switch (fig. 35, item 4) to position “**1**”.
- Loosen the screw plug on the gas test nipple (fig. 36) by two turns.
- Attach the pressure-gauge connection hose to the gas test nipple (fig. 37).
- Slowly open the gas shutoff valve.

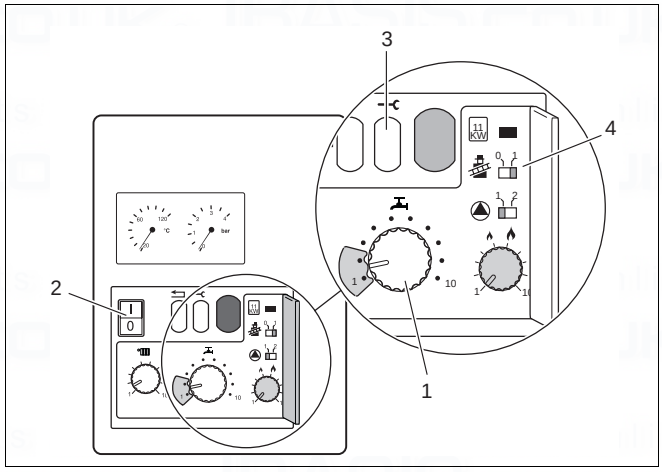

Fig. 35 Mains switch, service button and chimney-sweep switch

- Turn the power switch (fig. 35, item 2) to position “**I**”. The burner should ignite after about 30 seconds.
- Measure the gas connection pressure and note it down on the report form.

  The gas-connection pressure must be:
  for **natural gas H** min. 17 mbar, max. 25 mbar, nominal connection pressure 20 mbar
  for **propane P** min. 30 mbar, max. 50 mbar, nominal connection pressure 37 mbar.
- Detach the gauge-connection tube once more and close the test nipple at the screw plug.
- Ensure that switch is returned to "**0**" after this task has been carried out.

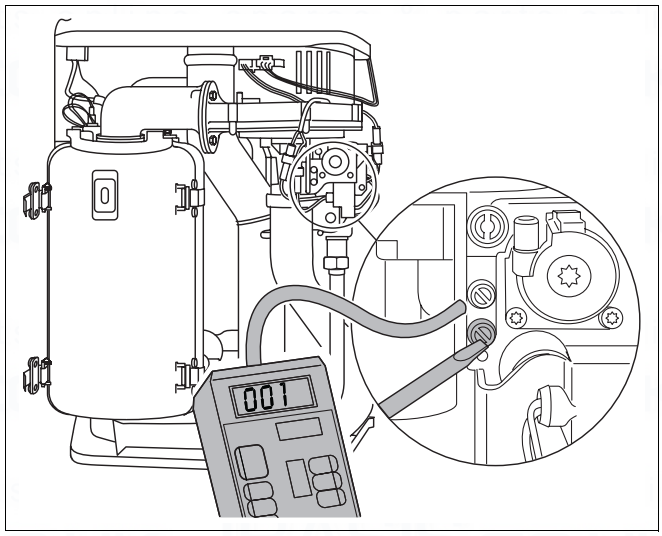

Fig. 36 Measure the gas connection pressure

.

NOTE
If the required connection pressure is not available or too high, contact your gas supplier or TRANSCO.

Ensure all disturbed joints and connections are checked for gas tightness on completion of tasks.

2.1.12 Check the gas/air ratio and adjust as required

- Turn mains power switch (fig. 35, item 2) and chimney-sweep switch (fig. 35, item 4) to “**0**”.
- Unscrew the sealing closure of the burner-pressure testing nipple by one turn (fig. 36).
- Connect the positive port of the pressure gauge with a hose to the burner pressure measuring nipple (fig. 37).
- Turn mains power switch to “**I**” and chimney-sweep switch to “**1**”.
- If the burner has fired after approx. 30 seconds, keep the service button (fig. 35, item 3) pressed until “**Y**” appears on the display.
- Turn the hot-water temperature controller (fig. 35, item 1) to “**1**”.
- Read the differential pressure.
  The differential pressure ($p_{GAS} - p_{AIR}$) should total -5 Pa (±5 Pa) (display on measuring gauge: -10 Pa to 0 Pa).

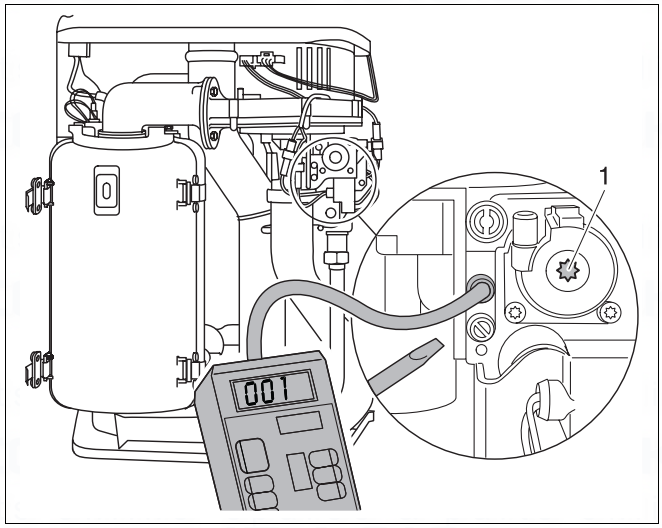

Fig. 37 Check the gas/air ratio

- If the gas/air ratio does not conform to specifications, readjust at the setscrew (fig. 37, item 1).
- Turn mains power switch and chimney-sweep switch to “**0**”.
- Remove the measuring equipment and retighten the screw in the burner-pressure measuring nipple.
- Readjust the hot-water temperature controller to its original setting.
- Turn the mains power switch to “**I**”.

2.1.13 Gas rating test

- Isolate all other appliances.
- Set the boiler to maximum firing rate.
- Ensure that there is no modulating of the fan gas valve.
- Carry out the Gas Rating procedure as described in "Essential Gas Safety' 3rd edition on pages 169-176.

2.1.14 Record readings

- Unscrew the corresponding sealing closure (fig. 38) on the connection adapter for the combustion-air/flue-gas system and replace it once the measuring operation in question has been carried out.

Carbon monoxide content

CAUTION
The carbon monoxide values under vacuum must be smaller than 400 ppm or 0.04 Vol%. Values around or exceeding 400 ppm indicate a faulty burner adjustment, a dirty gas burner or heat exchanger, or a defective burner. Ensure that the cause of the fault is remedied immediately.

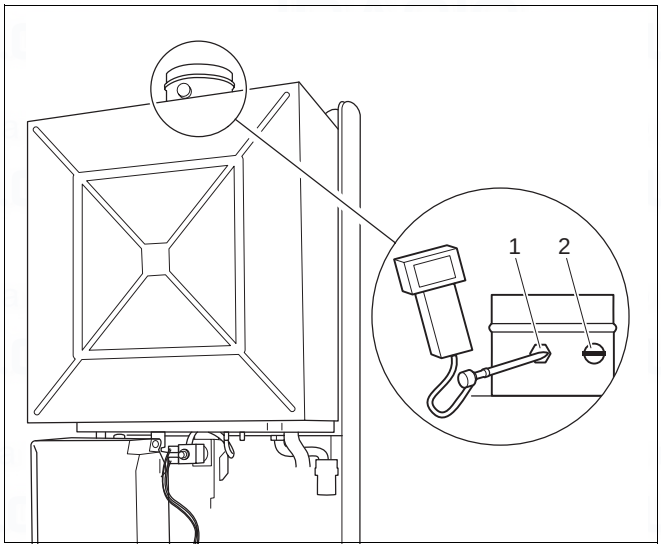

Fig. 38 Measuring points on exhaust conduit

Key to Fig. 38:

1: *Exhaust-fume temperature, CO_2, CO, NO_x*

2: *Combustion-air temperature*

2.1.15 Function testing

NOTE
During initial start-up and annual servicing, make sure that all control, regulating and safety devices are in full working order and, if applicable, check for correct adjustment.

Measuring the ionisation current (fig. 39)

- Disconnect the system from the power supply.
- Loosen the plug-and-socket connector of the ionisation electrode and connect the multimeter in series.
  On the measuring device, select the µ-direct current range. The measuring device must have a resolution of at least 1 µA.
- Reconnect the system to the power supply and turn the chimney-sweep switch to “**1**”.
- Measuring the ionisation current. The ionisation current being checked must measure >2 µA direct current.
- Enter the reading on the report form.
- Disconnect the system from the power supply.

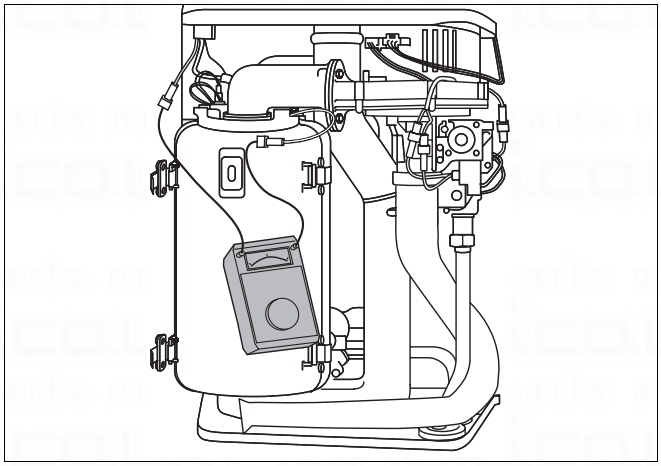

Fig. 39 Measuring the ionisation current

- Remove multimeter and restore the plug-and-socket connection to its original state.
- Turn the chimney sweep switch to position “**0**”.
- Reconnect the system to the power supply.
  When the display shows “**7**” and the service button is pressed, the display turns to “**c**”. Press the Reset button. The display shows “**r**”.

2.1.16 Handing over

After completing the installation and commissioning of the system the installer should hand over to the householder by the following actions:

- Hand the User Manual to the householder and explain his/her responsibilities under the relevant national regulations.
- Explain and demonstrate the lighting and shutting down procedures.
- The operation of the boiler and the use and adjustment of all system controls should be fully explained to the householder, to ensure the greatest possible fuel economy consistent with the household requirements of heating. Advise the User of the precautions necessary to prevent damage to the system and to the building in the event of the system remaining inoperative during frosty conditions.
- Explain the function and the use of the boiler heating controls.
- Explain the function of the boiler fault mode. Emphasise that if a fault is indicated, the boiler should be turned off and a registered local heating installer consulted.
- Explain and demonstrate the function of time and temperature controls, radiator valves etc., for the economic use of the system.

Loss of system water pressure

- Explain that the dial on the control panel indicates the central heating system pressure and that if the normal COLD pressure of the system is seen to decrease over a period of time then the systems needs to be topped up.
  If the pressure decreases frequently than a registered local heating installer should be consulted.

WARNING
Do not fire the boiler if the pressure has reduced to zero from the original setting.

- After installation, commissioning and customer handover instructions please complete the **BENCHMARK** appliance log book and leave this with the customer.
- **IMPORTANT**
  A comprehensive service should be carried out annually. Stress the importance of regular servicing by a Corgi registered installer.

3 Inspection

3.1 Preparing the heating boiler for inspection

- Disconnect the system.

DANGER OF FATAL INJURY
due to electric shock when system is opened.

- Before opening the system: disconnect the heating unit at the emergency OFF switch or the corresponding circuit breaker of the house power supply.
- Ensure that the heating system cannot be reconnected by accident.

- Remove the burner housing or cover from the heating boiler.

NOTE
If the gas supply pipes are to be disconnected from the burner, the housing MUST ONLY be removed by a qualified service technician and checked for tightness on reassembly.

For further information, please refer to subsection 8.2 "Inspection and maintenance reports" on page 66 and fill out the **Benchmark**.

4 Maintenance

For further information, please refer to subsection 8.2 "Inspection and maintenance reports" on page 66 and fill out the **Benchmark**.

4.1 Clean the heat exchanger, burner and condensate trap

NOTE
The cleaning of the burner and heat exchanger described here should be carried out whenever there are signs of heavy soiling on the wall-mounted condensing gas boiler. It is sufficient, during annual servicing, to clean the burner and heat exchanger with the help of an appropriate cleaning product and a soft brush and compressed-air hose (see following section).
The heat exchanger can be dismantled completely for thorough cleaning if required (see “Cleaning the heat exchanger after dismantling” on page 33)

4.1.1 Cleaning the heat exchanger without dismantling

- Disconnect the system from the power supply.
- Close the gas shutoff valve.
- Loosen the fixing screw, remove casing and combustion-chamber cover.
- Release plug-in connection of fan power lead (fig. 40, item 1), burner-control unit fan control lead (fig. 40, item 2) and gas-burner assembly (fig. 40, item 3).
- Loosen union nut on gas valve assembly (fig. 40, item 4).
- Push safety plate out of way.
- Turn air suction tube and pull off from below.
- Swivel forward the air combination unit (fig. 41, item 1).
- Pull the air combination unit up and out of bayonet connector (fig. 41, item 2) and remove via front of unit.
- Remove burner gasket (fig. 42, item 1).
- Remove rubber seal in combustion chamber by pushing upwards from inside (fig. 42, item 2).

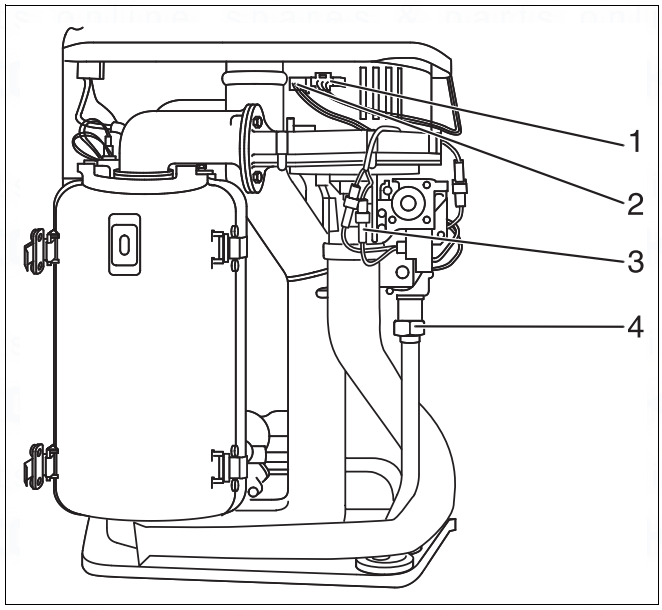

Fig. 40 Loosen the union nut and remove the cable

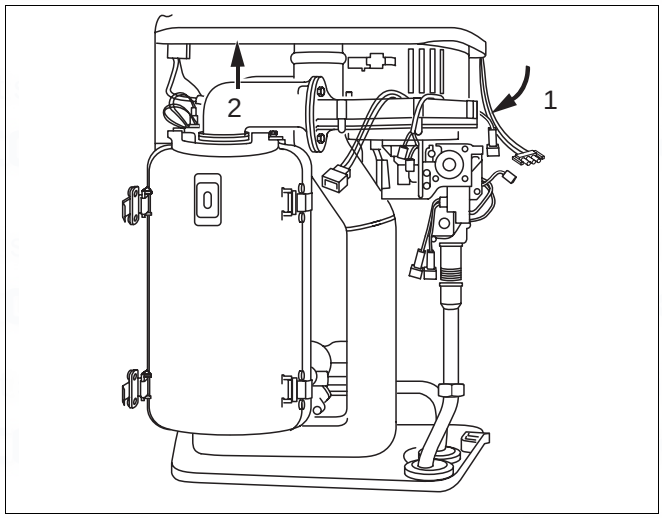

Fig. 41 Remove the air combination unit

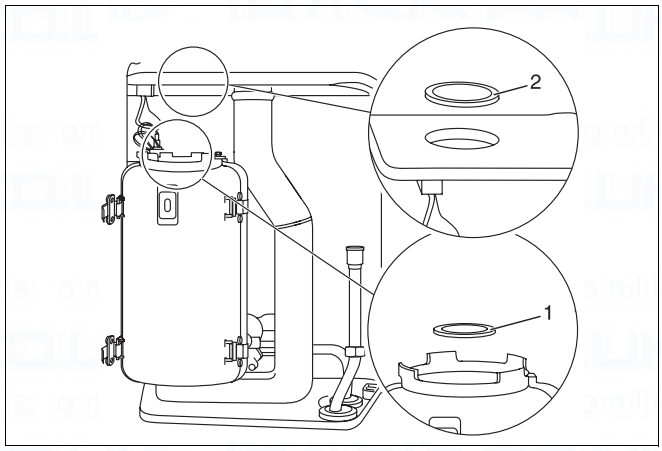

Fig. 42 Remove burner gasket and rubber seal

- Remove burner by pulling upwards through the opening (fig. 43).

NOTE
Maintain the specified clearance of approx. 25 cm between the ceiling and the combustion chamber cover.

- Remove the front casing shell of the combustion chamber. This is done by releasing the four snap catches at the sides.

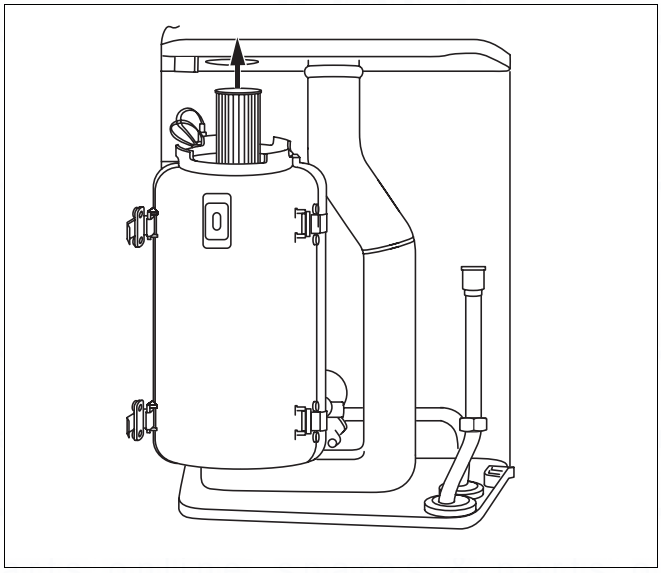

Fig. 43 Remove burner

- Remove the hot surface ignitor (fig. 44, item 1) and ionisation electrode (fig. 44, item 2).
  In the case of the hot surface ignitor: loosen the fixing screw of the hot surface ignitor, detach both earth (ground) leads and remove the retaining plate of the hot surface ignitor by pulling it upwards, withdraw the hot surface ignitor by pulling it upwards.
  In the case of the ionisation electrode: Swivel the retaining plate to one side and carefully remove the ionisation electrode by pulling it upwards.
- Clean the burner and both parts of the combustion chamber with a compressed-air line or brush.
- Refit the heat exchanger by following the above procedure in reverse order.

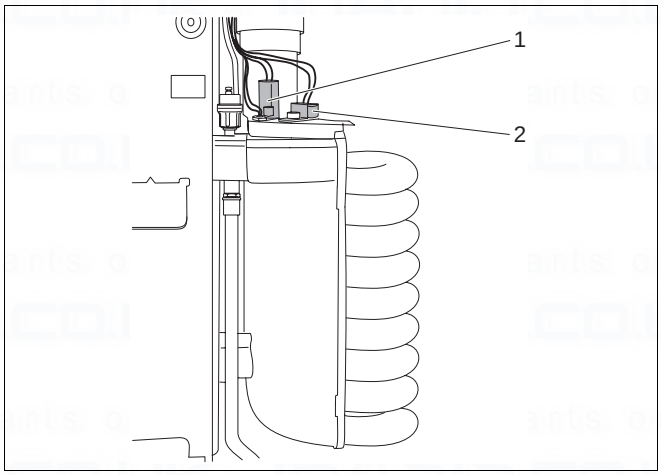

Fig. 44 Remove the hot surface ignitor and ionisation electrode

CAUTION
The gasket between the two halves of the casing shell should normally be replaced.
Fit the new gasket by pressing in from the top on both sides, and without stretching.
DO NOT attempt to cut the gasket to size.

CAUTION
The burner gasket must match the shape of the groove in the housing.

CAUTION
Check the heat-exchanger for leaks BEFORE reassembling the casing shells.

4.1.2 Cleaning the heat exchanger after dismantling

- Disconnect the system from the power supply.
- Close the gas shutoff valve.
- Loosen the retaining screw and remove the casing.
- Close the heating shutoff valves and drain the system.

CAUTION
Cut hot water on supply side by closing the heating shutoff valve.

CAUTION
Drain the system via the temporary filling loop (fig. 45) or the screw-in drain plug (fig. 46, item 1) located under the pump.

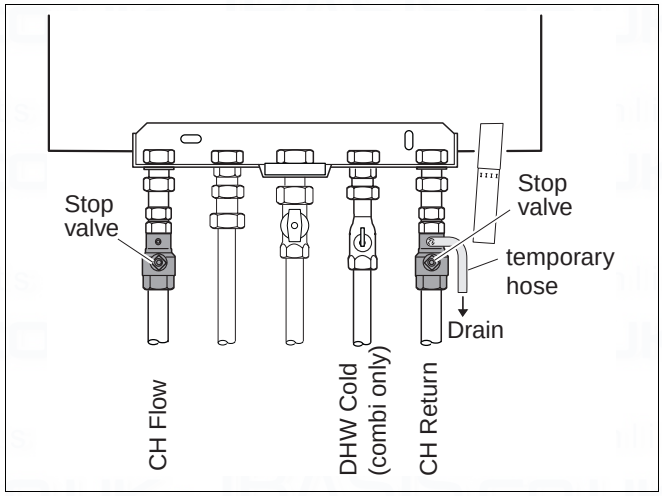

Fig. 45 Draining the system

- Open snap closures and remove combustion-chamber cover.
- Release plug-in connection of fan power lead (fig. 40, item 1), burner-control unit fan control lead (fig. 40, item 2) and gas-burner assembly (fig. 40, item 3).
- Loosen union nut on gas valve assembly (fig. 40, item 4).
- Push safety plate out of way.
- Turn air suction tube and pull off from below.
- Swivel the air combination unit forward (fig. 41, item 1).
- Pull the air combination unit up and out of bayonet connector (fig. 41, item 2) and remove via front of unit.
- Remove burner gasket (fig. 42, item 1) and rubber seal in combustion chamber from top (fig. 42, item 2).

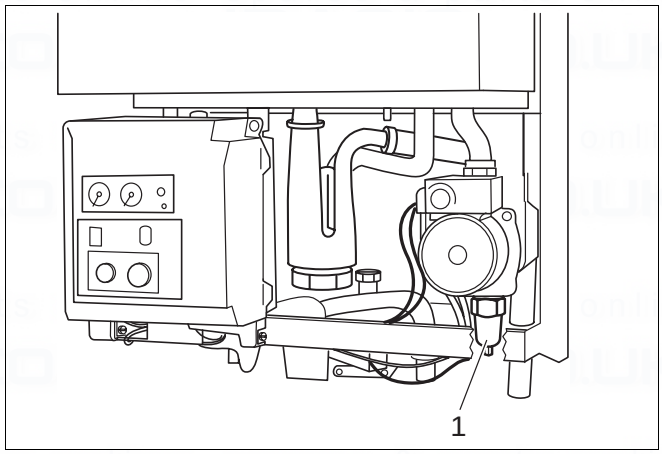

Fig. 46 Screw-in drain plug

- Remove burner by pulling upwards through the opening (fig. 47, item 1) and release the four retaining clips (fig. 47, item 2).
- Remove the front casing shell of the combustion chamber.
- Remove the hot surface ignitor (fig. 44, item 1) and ionisation electrode (fig. 44, item 2).
  In the case of the hot surface ignitor:
  Loosen the fixing screw of the hot surface ignitor, detach both earth (ground) leads and remove the retaining plate of the hot surface ignitor by pulling it upwards, withdraw the hot surface ignitor by pulling it upwards.
  In the case of the ionisation electrode:
  Swivel the retaining plate to one side and carefully remove the ionisation electrode by pulling it upwards.

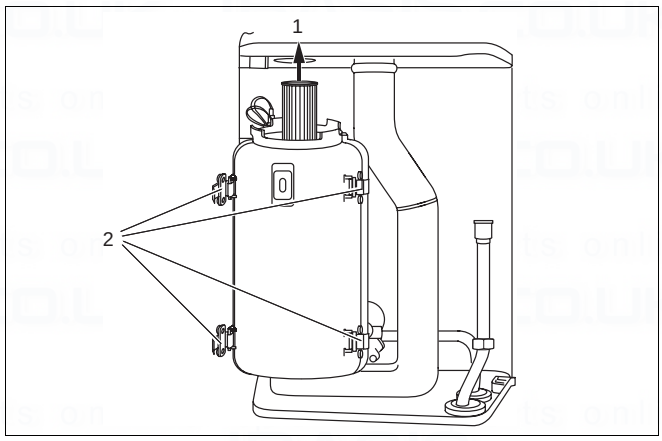

Fig. 47 Remove burner and release retaining clips

- Remove securing pin on flow and return flow conduit (fig. 48) of heat exchanger.
- Remove spiral heat exchanger by pulling towards front (fig. 48). Drain any water remaining in the heat exchanger into the condensate trap.

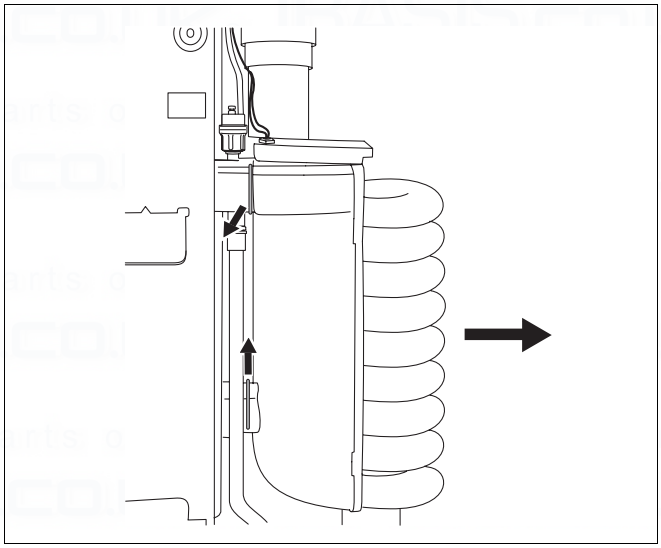

Fig. 48 Securing pin on spiral heat exchanger

- Remove the diffusion head (fig. 49, item 2) on the underside of the heat exchanger by withdrawing the securing pin (fig. 49, item 1) and unscrewing the diffusion head.
- Clean the two casing shells of the combustion chamber, heat exchanger and burner with water or compressed air.

Take care not to damage the fins of the heat exchanger.

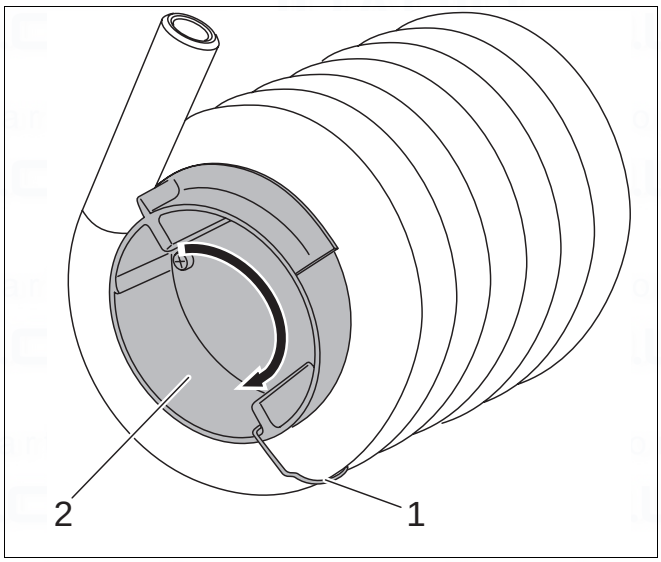

Fig. 49 Removing the diffusion head

Refitting (fig. 50) **:**

NOTE
Excessive exhaust temperatures may be an indication of an incorrectly-fitted diffusion head.

- Screw the diffusion head in as far as it will go on the underside of the heat exchanger (the final turn of the heat exchanger increases the clearance between the pipes) and insert securing pin.

CAUTION
Take care not to damage the insulation on the diffusion head.

- Check to ensure that the heat exchanger has been fitted the right way round. The upper securing-pin groove must be horizontal.

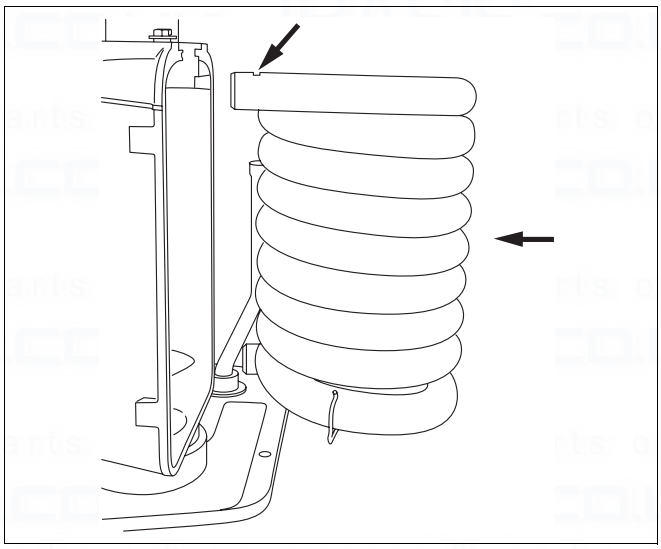

Fig. 50 Refitting the heat exchanger

Refit the heat exchanger by following the above procedure in reverse. Note the following:

– The gasket between the two halves of the casing shell should normally be replaced. Fit the new gasket by pressing in from the top on both sides, and without stretching. DO NOT attempt to cut the gasket to size.

– Check the heat-exchanger for leaks BEFORE reassembling the casing shells.

- Check O-ring seals (spiral), and replace as required.
- Smear the O-ring seal **with** a thin layer of silicone grease.

4.1.3 Cleaning the condensate trap

- Remove the trap from the sleeve with the lip seal facing downwards (fig. 51, item 1) and withdraw it from the outlet (fig. 51, item 2).
- Remove the safety cover and clean the trap.
- Fill the siphon with water and then reassemble in reverse order.
- Measuring the gas input pressure (flow pressure).
- Check the gas/air ratio.
- Leak test in operational condition.
- Measuring the carbon monoxide content.
- Carry out function testing.

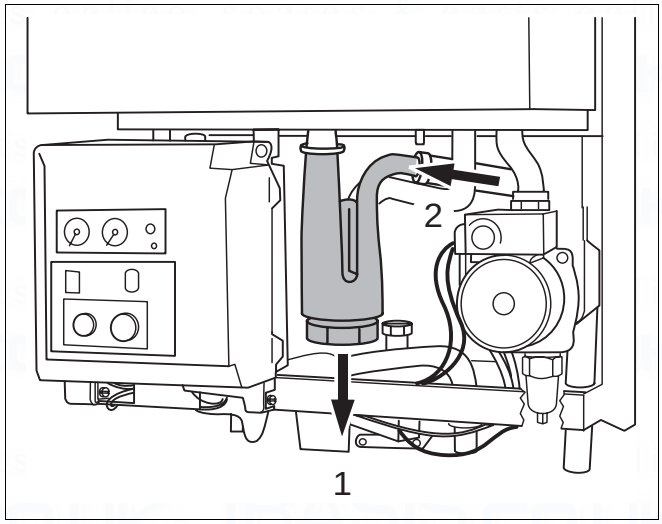

Fig. 51 Removing the condensate trap

4.2 Flushing out the hot-water heat exchanger

- Turn mains power switch to “**0**”.
- Shut cold-water tap (accessory).
- Open a hot-water tap (e.g. at the washbasin) and then close it again in order to check the pressure of the water being supplied.
- Loosen the cable on the stand-by sensor.
- Release the plastic clip from the bottom insulation of the hot-water heat exchanger and remove the insulation.
- Connect the system to a power flusher unit and flush it out.
- Remove temperature sensor for DWH warm out and stand-by sensor, and replace with flushing hoses (fig. 52).
- Reassemble.
- Open cold-water tap (accessory).
- Open hot-water tap (e.g. at washbasin) and thoroughly flush out system.
- Turn mains power switch to “**I**”.

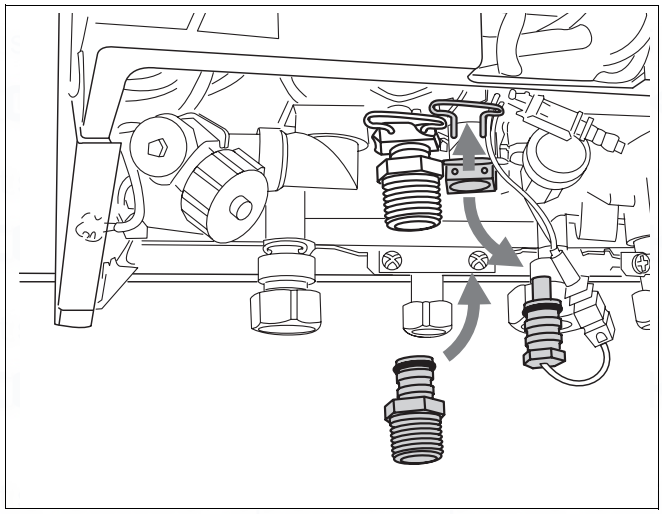

Fig. 52 Flushing out the hot-water heat exchanger

5 Servicing

5.1 Operating codes

NOTE
If the code displayed on the burner-control unit is not listed under the operating codes or fault warnings, the burner-control unit itself is malfunctioning.

Display	Display after pressing the service button	Meaning
0		**Buderus 600 - 11S/19S/24S/24C is ready for operation**
	A	Burner interval circuit, 10 min. from burner start-up
	C	Waiting for activation of the three-way valve (if fitted) or pump
	H	Stand-by activated, Buderus 600 - 11S/19S/24S/24C ready to provide heat or hot water
	L	Initial safety period: self-testing of burner-control unit during burner start-up
	U	Post- or pre-purging period of fan unit
	Y	Flow temperature at adjustment setting
-.		**Buderus 600 - 11S/19S/24S/24C running in heating mode**
	A	“Chimney-sweep” mode, flow-temperature controller bypassed, Buderus 600 - 11S/19S/24S/24C heating to previously-entered flow temperature.
	H	Normal heating mode
	Y	Service mode
=.		**Buderus 600 - 11S/19S/24S/24C running in hot-water mode**
	H	Normal hot water mode
r		**Reset**

5.2 Fault codes

Code	Meaning	
2C	*Safety sensor exceeds 100 °C*	
Possible cause		**Action**
1	Resistance in the installation is too high	Check if not all (thermostatic) radiator valves are clogged with dirt.
2	Heating capacity is too large for the installation	Adjust the heating capacity (see subsection 2.1.10)
3	Safety sensor is faulty	Measure if resistance over the sensor is correct. If not replace safety sensor (see subsection 5.3.11, subsection 5.3.12, subsection 5.3.13)
4	Problem with the pump or pump cabling (no circulation)	Check if the pump cabling is faulty or if the pump is stuck (see subsection 5.3.9)
5	Water pressure is too low in the installation	Top up the system (see subsection 2.1.1)

Code	Meaning	
2F	*Temperature difference between the safety sensor and flow sensor is greater than or equal to 15 °K*	
Possible cause		**Action**
1	Resistance in the installation is too high	Check if not all (thermostatic) radiator valves are closed or clogged with dirt
2	Safety sensor is dirty or faulty	Check the safety sensor for dirt. Measure if resistance over the sensor is correct. If not replace safety sensor (see subsection 5.3.11, subsection 5.3.12, subsection 5.3.13)
3	Flow sensor is dirty or faulty	Check the sensor, replace if necessary (see subsection 5.3.14, subsection 5.3.15, subsection 5.3.16)
4	Problem with the pump or pump cabling (no circulation)	Check if the pump cabling is faulty or if the pump is stuck. Replace pump if necessary (see subsection 5.3.9 and subsection 5.3.10)
5	Water pressure is too low in the installation	Top up the system (see subsection 2.1.1)

Code	Meaning	
2P	*Safety sensor rises faster than 5 °C/sec.*	
Possible cause		**Action**
1	Heating capacity is too large for the installation	Adjust the heating capacity (see subsection 2.1.10)
2	Resistance in the installation is too high	Check if not all (thermostatic) radiator valves are closed or clogged with dirt
3	Safety sensor is dirty or faulty	Check the safety sensor for dirt. Measure if resistance over the sensor is correct. If not replace safety sensor (see subsection 5.3.11, subsection 5.3.12, subsection 5.3.13)
4	External domestic hot water tank is too small for the heating capacity	Top up the system (see subsection 2.1.1)

Code	Meaning	
3C	*Bad plug-in connection at cable harness, or damaged wiring*	
Possible cause		**Action**
1	Cable harness is faulty	Check cable harness for faults and bad connections
2	Connectors at the back of the UBA are loose or faulty	Check the connectors at the back of the UBA
3	UBA might be faulty	Check the UBA by temporarily connecting an other UBA (see subsection 5.3.3)

Code	Meaning	
4A	*Flow sensor exceeds 100 °C*	
Possible cause		**Action**
1	Flow sensor is dirty or faulty	Check the sensor, replace if necessary (see subsection 5.3.14, subsection 5.3.15, subsection 5.3.16)
2	There is a problem with the pump or pump cabling (no circulation)	Check if the pump cabling is faulty or if the pump is stuck. Replace pump if necessary (see subsection 5.3.9 and subsection 5.3.10)
3	Water pressure is too low in the installation	Top up the system (see subsection 2.1.1)

Code	Meaning	
4C	*F2 fuse malfunction, or flue gas thermostat active*	
Possible cause		**Action**
1	Water pressure is too low in the installation	Top up the system (see subsection 2.1.1)
2	Heat exchanger is dirty	Check for a dirty heat exchanger and clean if necessary. (see subsection 4.1)
3	Flue gas retarder faulty or missing	Check if the flue gas retarder is installed in the heat exchanger
4	Heat exchanger has a problem	Purge heat exchanger

Code	Meaning	
4F	*Flow sensor exceeds 100 °C*	
Possible cause		**Action**
1	Resistance in the installation is too high	Check if not all (thermostatic) radiator valves are clogged with dirt
2	Heating capacity is too large for the installation	Adjust the heating capacity
3	Safety sensor is faulty	Check the sensor and measure if resistance over the sensor is correct. If not replace safety sensor (see subsection 5.3.11, subsection 5.3.12, subsection 5.3.13)
4	Problem with the pump or pump cabling (no circulation)	Check if the pump cabling is faulty or if the pump is stuck (see subsection 5.3.9)
5	Water pressure is too low in the installation	Top up the system (see subsection 2.1.1)

Code	Meaning	
4H	*System error*	
Possible cause		**Action**
1	Boiler is in operation for DHW due to a dripping faucet	Check for dripping faucets

Code	Meaning	
4L	*Short circuit in safety sensor*	
Possible cause		**Action**
1	Safety sensor is faulty	Check the sensor and measure if resistance over the sensor is correct. If not replace safety sensor (see subsection 5.3.11, subsection 5.3.12, subsection 5.3.13)
2	A short or bad connection in the cable harness	Check the cable harness and/or connector of the sensor
3	UBA might be faulty	Check the UBA by temporarily connecting a different UBA (see subsection 5.3.3)

Code	Meaning	
4P	*Safety sensor has a loose connection or is defective*	
Possible cause		**Action**
1	Safety sensor faulty or disconnected	Check the sensor and measure if resistance over the sensor is correct. If not replace safety sensor (see subsection 5.3.11, subsection 5.3.12, subsection 5.3.13)
2	A short or bad connection in the cable harness	Check the cable harness and/or connector of the sensor
3	UBA might be faulty	Check the UBA by temporarily connecting a different UBA (see subsection 5.3.3)

Code	Meaning	
4U	*Short circuit in flow sensor*	
Possible cause		**Action**
1	Flow sensor is dirty or faulty	Check the sensor, replace if necessary (see subsection 5.3.14, subsection 5.3.15, subsection 5.3.16)
2	A short or bad connection in the cable harness	Check the cable harness and/or connector of the sensor
3	UBA might be faulty	Check the UBA by temporarily connecting a different UBA (see subsection 5.3.3)

Code	Meaning	
4Y	*Flow sensor interrupted*	
Possible cause		**Action**
1	Flow sensor faulty or disconnected	Check the sensor and measure if resistance over the sensor is correct. If not replace safety sensor (see subsection 5.3.14, subsection 5.3.15, subsection 5.3.16)
2	A short or bad connection in the cable harness	Check the cable harness and/or connector of the sensor
3	UBA might be faulty	Check the UBA by temporarily connecting a different UBA (see subsection 5.3.3)

Code	Meaning	
5C	*Boiler shut down after connection with Service Tool*	
Possible cause		**Action**
1	Service tool connection	Press reset. If fault code remains than try to temporarily connect a different UBA (see subsection 5.3.3)
2	A short or bad connection in the cable harness	Check the cable harness and/or connector of the sensor
3	UBA might be faulty	Check the UBA by temporarily connecting an other UBA (see subsection 5.3.3)

Code	Meaning	
6A	*F1 fuse defective, or no ionisation message after ignition*	
Possible cause		**Action**
1	There is no flame, ionisation electrode doesn't glow, fan is turning	– Check wiring of the hot surface ignitor, measure the resistance of the hot surface ignitor (should be between 50 and 300 Ohm). Replace hot surface ignitor if necessary (see subsection 5.3.19 and subsection 5.3.20) – Check the UBA's F1 fuse, replace if necessary
2	There is no flame, ionisation electrode does glow, fan isn't turning	– Check the fan and KIM connectors and the UBA fuses
3	There is no flame, ionisation electrode and fan are working	– Check and adjust the gas/air ratio (see subsection 2.1.12) – Check for 24 V~ on the gas valve during start up – Check the gas-supply pressure (see subsection 2.1.11), this should be higher than 20 mbar for natural gas. – Check the earthing cable connections (yellow/green wire). – Check the cabling on the ionisation electrode
4	There is a flame, but the flame disappears when the fan starts up	– Check the gas-supply pressure (see subsection 2.1.11), this should be higher than 20 mbar for natural gas. – Check and adjust the gas/air ratio (see subsection 2.1.12) – Check the earthing cable connections (yellow/green wire) – Check the cabling on the ionisation electrode – Press reset. If fault code remains than try to temporarily connect a different UBA (see subsection 5.3.3)

Code	Meaning	
6C	*Ionisation message, but no flame*	
Possible cause		**Action**
1	There is no flame, ionisation electrode doesn't glow, fan is turning	– Check wiring of the hot surface ignitor, measure the resistance of the hot surface ignitor (should be between 50 and 300 Ohm). Replace hot surface ignitor if necessary (see subsection 5.3.19 and subsection 5.3.20) – Check the UBA's F1 fuse, replace if necessary
2	There is no flame, ionisation electrode does glow, fan isn't turning	– Check the fan and KIM connectors and the UBA fuses
3	There is no flame, ionisation electrode and fan are working	– Check and adjust the gas/air ratio (see subsection 2.1.12) – Check for 24V – on the gas valve during start up – Check the gas-supply pressure (see subsection 2.1.11), this should be higher than 20 mbar for natural gas. – Check the earthing cable connections (yellow/green wire). – Check the cabling on the ionisation electrode
4	There is a flame, but the flame disappears when the fan starts up	– The gas valve doesn't close properly. If there is still more than 20 V~ on the gas valve when there is no heat demand then check the UBA by temporarily connecting a different UBA. – Check ionisation electrode/circuit (see subsection 2.1.15 and subsection 5.3.22) – When both the UBA and the ionisation electrode/circuit are OK, then replace the gas valve – Press reset. If fault code remains than try to temporarily connect a different UBA (see subsection 5.3.3)

Code	Meaning	
6H	*Flame dies out after gas valve is opened*	
Possible cause		**Action**
1	Gas/air ratio not in order	Check and adjust the gas/air ratio (see subsection 2.1.12)
2	Gas supply pressure may need adjusting	Check the gas-supply pressure (see subsection 2.1.11), this should be higher than 20 mbar for natural gas
3	Earthing cable may be faulty	Check the earthing cable connections (yellow/green wire)
4	Ionisation electrode may be faulty	Check the cabling on the ionisation electrode

Code	Meaning	
6L	*Flame goes out during warm-up phase*	
Possible cause		**Action**
1	Gas/air ratio not in order	Check and adjust the gas/air ratio (see subsection 2.1.12)
2	Gas supply pressure may need adjusting	Check the gas-supply pressure (see subsection 2.1.11), this should be higher than 20 mbar for natural gas
3	Earthing cable may be faulty	Check the earthing cable connections (yellow/green wire)
4	Ionisation electrode may be faulty	Check the cabling on the ionisation electrode

Code	Meaning	
7A	*Voltage in burner-control unit too low (lower than 187 V~) or too high (higher than 246 V~)*	
Possible cause		**Action**
1	Regulating device may have to cope with interference	– Check if for example induction fields interfere with the regulating device – Check if the are any peaks in the electrical network caused by maybe windmills or a power generator

Code	Meaning	
7C	*Mains supply interrupted*	
Possible cause		**Action**
1	A problem with the mains supply	Carry out a power test procedure for safe testing of the mains electrical supply
2	Reset button pressed too briefly	Press the Reset button until "r" appears in the display

Code	Meaning	
7F	*F3 fuse defect, or burner control unit error*	
Possible cause		**Action**
1	Short circuit in the 24V circuit (three-way-valve or connector)	Check for a short circuit and replace the F3 fuse
2	Regulating device may have to cope with interference	– Check if for example induction fields interfere with the regulating device – Check if the are any peaks in the electrical network caused by maybe windmills or a power generator

Code	Meaning	
7H	*Voltage peaks in the UBA*	
Possible cause		**Action**
1	Regulating device may have to cope with interference	– Check if for example induction fields interfere with the regulating device – Check if the are any peaks in the electrical network caused by maybe windmills or a power generator

Code	Meaning	
7L	*Internal UBA error*	
Possible cause		**Action**
1	Regulating device may have to cope with interference	– Check if for example induction fields interfere with the regulating device – Check if the are any peaks in the electrical network caused by maybe windmills or a power generator

Code	Meaning	
8Y	*Gas fault*	
Possible cause		**Action**
1	External switching contact (e.g. temperature-monitoring device for underfloor heating has been tripped or gas pressure too low	Check gas pressure detector is defective or the wires have not been properly connected to the back of the UBA (see subsection 5.3.6)

Code	Meaning	
9A	*System error*	
Possible cause		**Action**
1	Regulating device may have to cope with interference	– Check if for example induction fields interfere with the regulating device – Check if the are any peaks in the electrical network caused by maybe windmills or a power generator – Check for dripping hot water taps on the combination boiler only
2	UBA may be defective	Press reset. If fault code remains then try to temporarily connect a different UBA

Code	Meaning	
9C	*KIM error*	
Possible cause		**Action**
1	KIM connected incorrectly or KIM defective	Check the KIM connector and fan connector. If the connectors are fine then contact Boulter Buderus

Code	Meaning	
9F/H	*System error*	
Possible cause		**Action**
1	Regulating device may have to cope with interference	– Check if for example induction fields interfere with the regulating device – Check if the are any peaks in the electrical network caused by maybe windmills or a power generator
2	UBA may be defective	Press reset. If fault code remains then try to temporarily connect a different UBA (see subsection 5.3.3)

Code	Meaning	
9L	*Gas valve assembly error*	
Possible cause		**Action**
1	Wiring to the gas valve incorrect, or loose wiring connections in UBA	– Check the electrical connections of the gas valve. – Measure the resistance of the gas valve (18-55 Ohm) – Check if for example induction fields interfere with the regulating device
2	UBA may be defective	– Press reset. If fault code remains then try to temporarily connect a different UBA (see subsection 5.3.3)
3	Peaks in the electrical network	– Check if the are any peaks in the electrical network caused by maybe windmills or a power generator

Code	Meaning	
9U	*KIM defective*	
Possible cause		**Action**
1	KIM connected incorrectly or KIM defective	Check the KIM connector and fan connector. If the connectors are fine then contact Boulter Buderus

Code	Meaning	
E with any character but P	*UBA defective*	
Possible cause		**Action**
1	Regulating device may have to cope with interference	– Check if for example induction fields interfere with the regulating device – Check if the are any peaks in the electrical network caused by maybe windmills or a power generator
2	UBA may be defective	– Press reset. If fault code remains then try to temporarily connect a different UBA (see subsection 5.3.3)

Code	Meaning	
EP	*Non compatible UBA fitted*	
Possible cause		**Action**
1	Regulating device may have to cope with interference	– Check if for example induction fields interfere with the regulating device – Check if the are any peaks in the electrical network caused by maybe windmills or a power generator
2	KIM connected incorrectly or KIM defective	– Check the KIM connector and fan connector. If the connectors are fine then contact Boulter Buderus

Problem: *No DHW, despite the system being operational*
– Set chimney sweep switch to "0"
– Check three-way valve replace if necessary
– Check DHW sensor and replace if necessary

Problem: *No heating, despite that there is a demand for heat and the boiler is operational*
– Check regulating device configuration and/ or the wiring
– Check the wiring between the regulating device and the UBA (see subsection 5.3.6)
– Check all the wiring
– Check the UBA and replace if necessary (see subsection 5.3.3)

5.3 Checking and replacing parts

5.3.1 Checking the flue gas sensor

- Detach plug-and-socket connection on cable to flue gas sensor. Ensure that no cable is earthed (grounded) at any point.
- Allow the flue gas sensor to cool down.
  Activation temperature:
  600 - 11S / 19S / 24S / 24C: 105 °C
- Check flue gas sensor for free throughput. If throughput is not free, the flue gas sensor is defective.
- Replace any flue gas sensor found to be defective.
  Ensure you use only genuine Boulter Buderus spare parts.
- If the flue gas sensor is working correctly, plug it in once more.

5.3.2 Replacing the flue gas sensor

- Unscrew the flow-backup mounting.
- Detach the cable plug at the flue gas sensor.
- Loosen both retaining screws on the flue gas sensor.
- Remove the flue gas sensor and replace with a new unit (fig. 53).
- Retighten the retaining screws.
- Reconnect the cable plug.
- Screw the mounting into place.

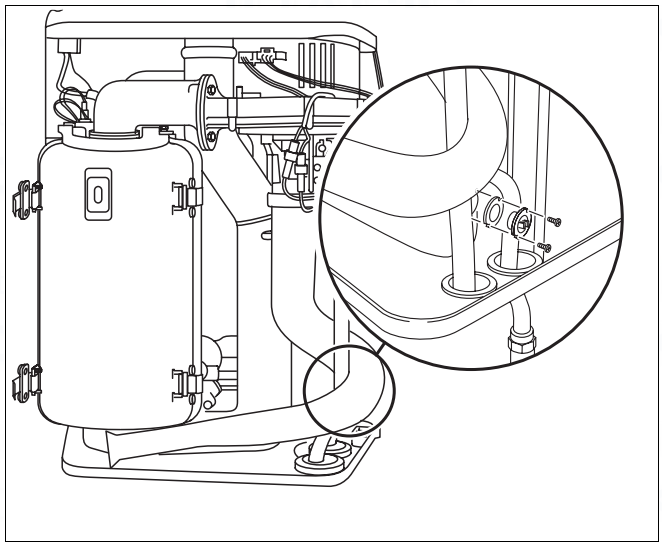

Fig. 53 600 - 11S / 19S / 24S / 24C: replacing the flue gas sensor

5.3.3 Replacing the UBA

- Disconnect the system from the power supply.
- Loosen crosshead screw (fig. 54, item 1) on UBA housing.
- Swivel UBA housing downwards.

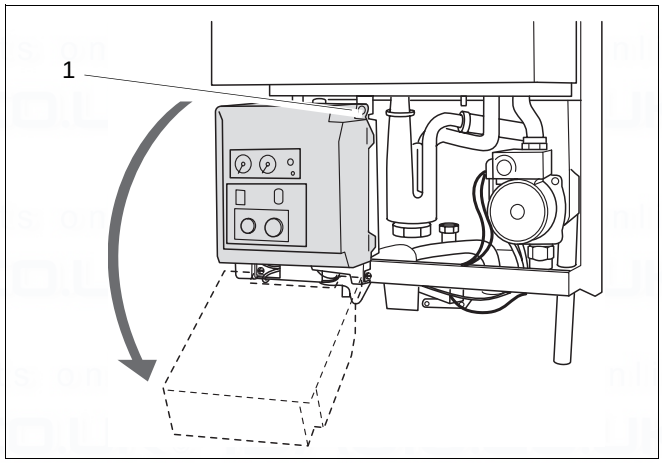

Fig. 54 Swivel UBA housing downwards

- Open the UBA housing (fig. 55).
- Note the position of the cable plugs, disconnect all cable plugs.
- Open the mains connection box by loosening the screw.
- Loosen the four screws and remove the strain-relief clamp.

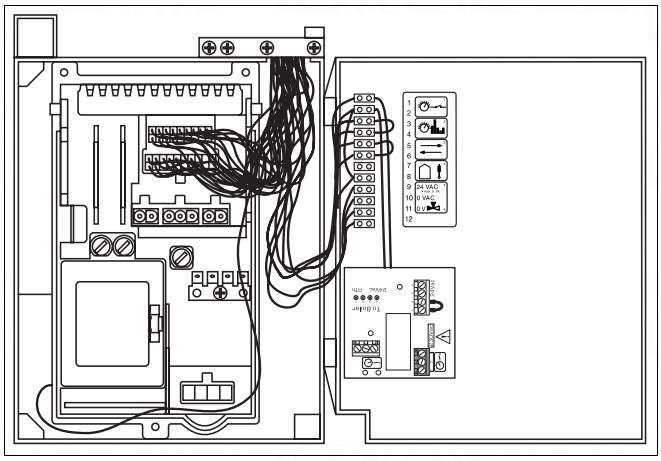

Fig. 55 Opening the UBA housing

- Carefully lift the UBA and remove by pulling forwards (snap lock) (fig. 56).
- Fit new UBA.
- Reconnect all plug-in cables to their correct sockets.
- Feed the mains lead in through the strain-relief clamp in the connection box and connect to the terminals as per the wiring diagram.
- Retighten the strain-relief clamp and shut the connection box.
- Shut the mains connection box.
- Shut the UBA housing.
- Swivel the UBA housing upwards and screw into place.
- Fit the casing.
- Connect system to mains power supply.

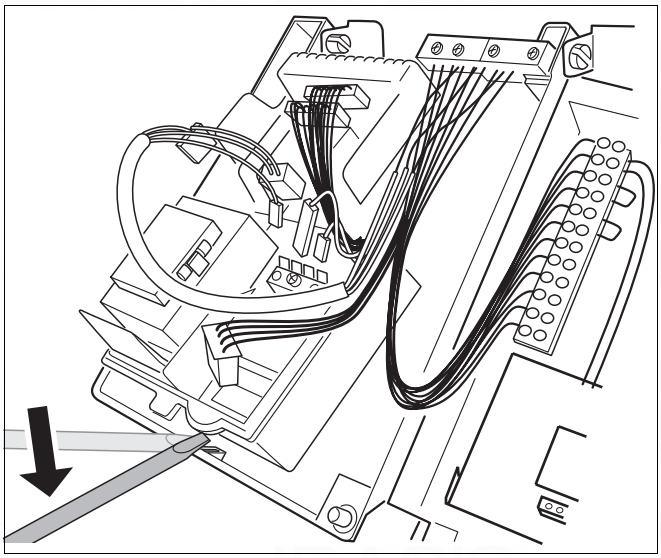

Fig. 56 Carefully lift the UBA to remove

5.3.4 Checking the fan

- Set the mains switch to “**0**”.
- Disconnect the fan's plug and socket connection.
- Connect a multimeter (230 V AC).
- Turn the mains power switch to “**I**”.
- Take voltage reading at measuring device.
  If the voltage reading is 230 V, the power supply is in order.
- Set the mains switch to “**0**”.
- If the power supply is in order, plug the unit in once more.
- Turn the mains power switch to “**I**”.
- If the fan now fails to run, it must be replaced.
- If the fan runs at only partial load (i.e. effective operation of the boiler is not possible), troubleshooting should start at the connection cable to the UBA or UBA.

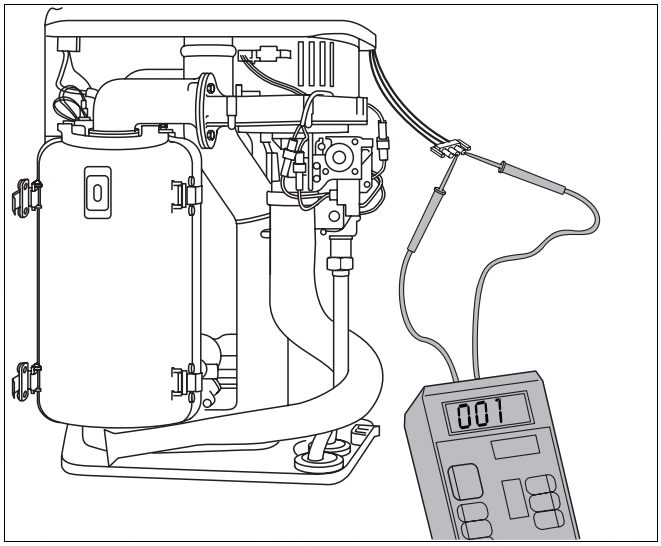

Fig. 57 Checking the fan

5.3.5 Replacing the fan

- Shut the gas valve.
- Disconnect the system from the power supply.
- Disconnect the fan, using the plug and socket from the power supply (fig. 58, item 1), loosen the UBA control line at the fan (fig. 58, item 2) and the gas burner fitting (fig. 58, item 3).
- Loosen the union nut (fig. 58, item 4) on the gas burner fitting.

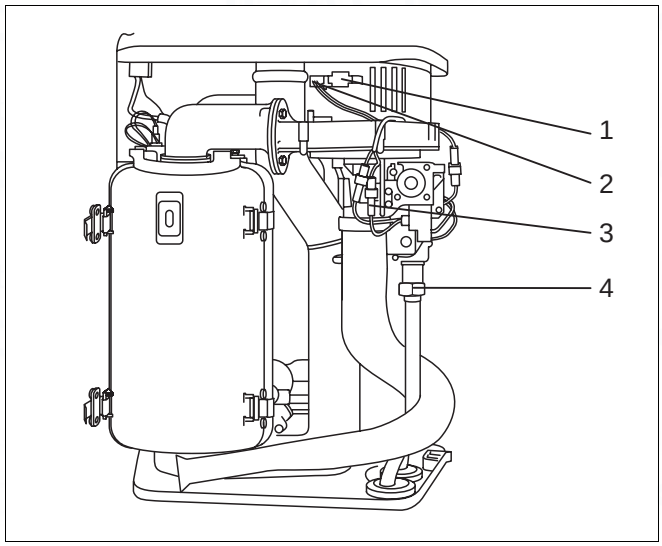

Fig. 58 Replacing the fan on the 600 Series: loosen plug and union nut

- Push the safety plate out of the way (fig. 59, item 1).
- Turn air suction tube and pull off from below.

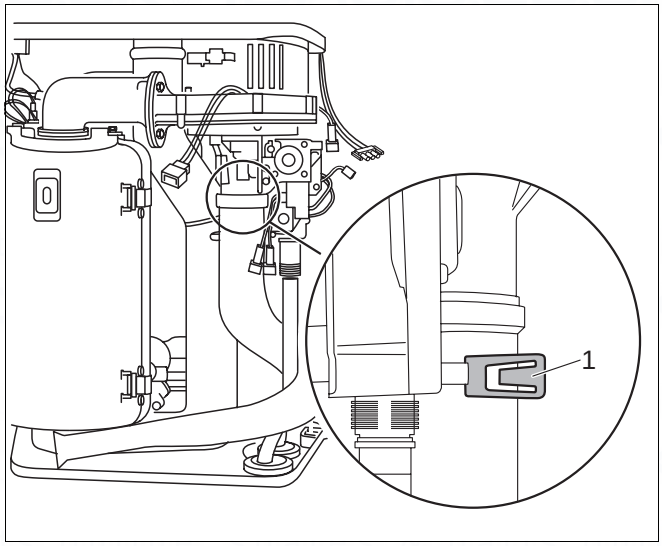

Fig. 59 Replacing the fan on the 600 Series: remove the air suction tube

- Swivel the gas combination unit forward (fig. 60, item 1)
- Remove the gas combination unit from its bayonet connector and pull upwards to detach (fig. 60, item 2).

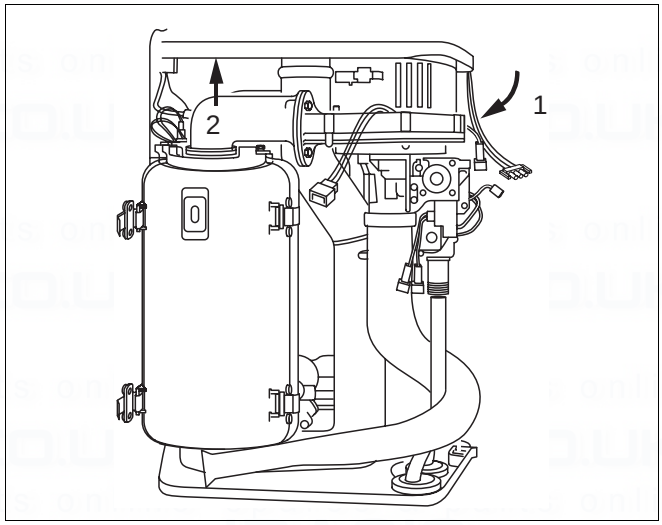

Fig. 60 Replacing the fan on the 600 Series: remove the gas connection unit

- Detach the fan by loosening the 2 x 2 screws on the connection unit.
- Replace the fan.
- Refit by following the above procedure in reverse.

NOTE
Once installation has been completed successfully, carry out leak testing as per subsection 2.1.2.

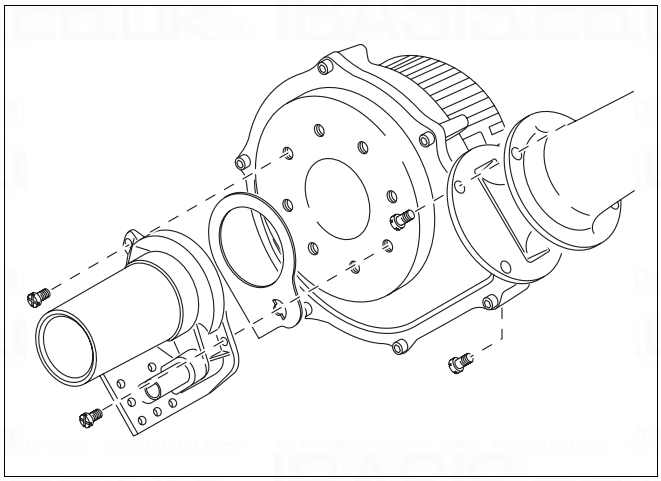

Fig. 61 Replacing the fan on the 600 Series: replace the fan

5.3.6 Checking the wiring connections of the UBA

- Disconnect the system from the power supply.
- Loosen crosshead screw on UBA housing.
- Swivel UBA housing downwards.
- Open the UBA housing.
- Check all cable terminals for tightness and resecure/retighten as required.
- Shut the UBA housing.
- Swivel the UBA housing upwards and screw into place.
- Connect system to mains power supply.

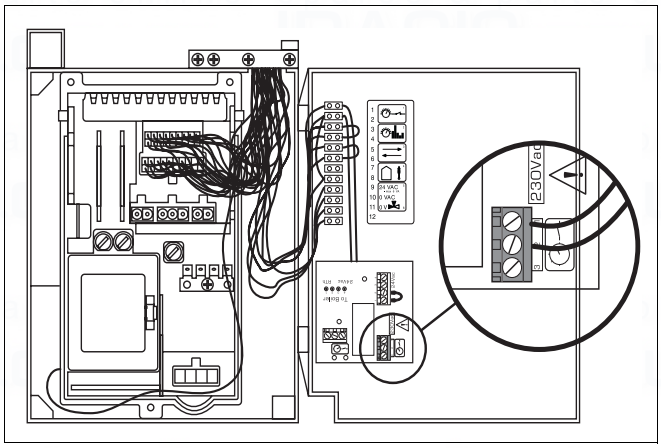

Fig. 62 Checking the wiring connections of the UBA

5.3.7 Checking the mains supply

If the mains supply is interrupted or seems faulty, carry out a power test procedure for safe testing of the mains electrical supply.

- Loosen crosshead screw on UBA housing.
- Swivel UBA housing downwards.
- Open the UBA housing.
- Carry out the power test procedure (see fig. 63, item 1).
- Shut the UBA housing.
- Swivel the UBA housing upwards and screw into place.
- Connect system to mains power supply.

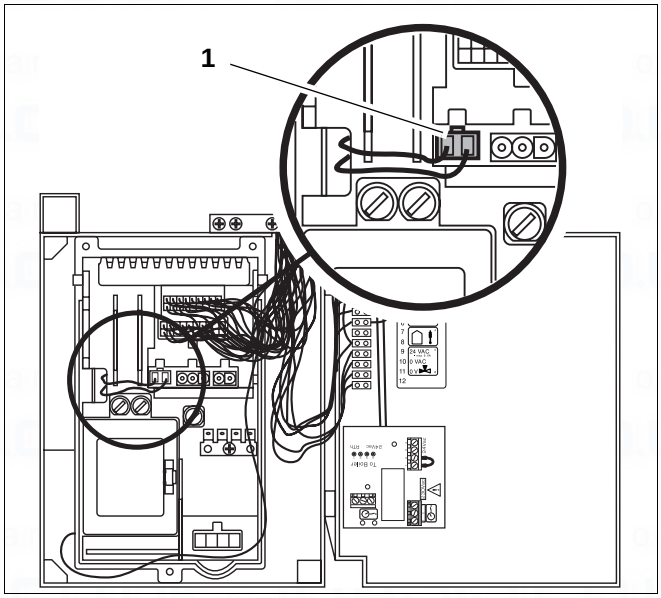

Fig. 63 Checking the mains supply

5.3.8 Checking the miniature fuses

- Disconnect the system from the power supply.
- Loosen crosshead screw on UBA housing.
- Swivel UBA housing downwards.
- Open the UBA housing.
- Check miniature fuses (fig. 64) for correct functioning, or carry out visual inspection. If defective, fit new fuse. All fuses a rated 230 Vac - 1.25 AT.

Fuse	Function
1	Hot surface ignitor
2	UBA, sensors, thermostat valve
3	UBA, three-way valve

- Shut the UBA housing.
- Swivel the UBA housing upwards and screw into place.
- Connect system to mains power supply.

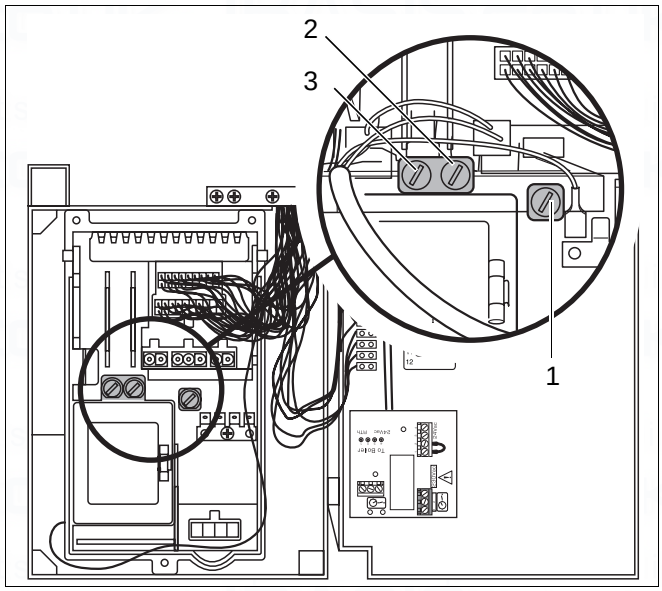

Fig. 64 Checking the miniature fuse

5.3.9 Checking the pump

- Remove screw plug on the pump (fig. 65).
- Turn the UBA mains power switch to “**I**”.
- Check to ensure that the pump is running. The pump’s running mechanism may become blocked if the heating system has been out of use for an extended period. Use a screwdriver to rotate the pump in its normal running direction and release the blockage in question. If this procedure does not work, replace the pump.
- If the pump is working correctly, screw the plug back in.

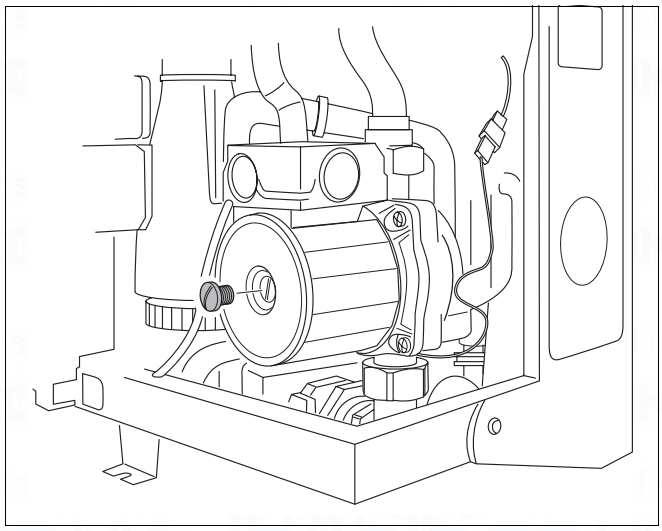

Fig. 65 600 - 11S / 19S / 24S / 24C: checking the pump

5.3.10 Replacing the pump

- Disconnect the system from the power supply.
- Shut the servicing valve.
- Drain the 600 - 11S / 19S / 24S / 24C as per the "Installation and Servicing Instructions".
- Loosen the screw on the terminal box (fig. 66, item 2) of the pump and open the terminal box. Note the wiring layout, and loosen the cables (fig. 66, item 1).
- Loosen the screw-in connections on the pump (fig. 66, item 3) and remove the pump.
- Fit new pump and connect to system.
- Connect cables in previously-noted order inside terminal box, close terminal box and screw shut.
- Connect system to mains power supply.
- Open servicing valves.

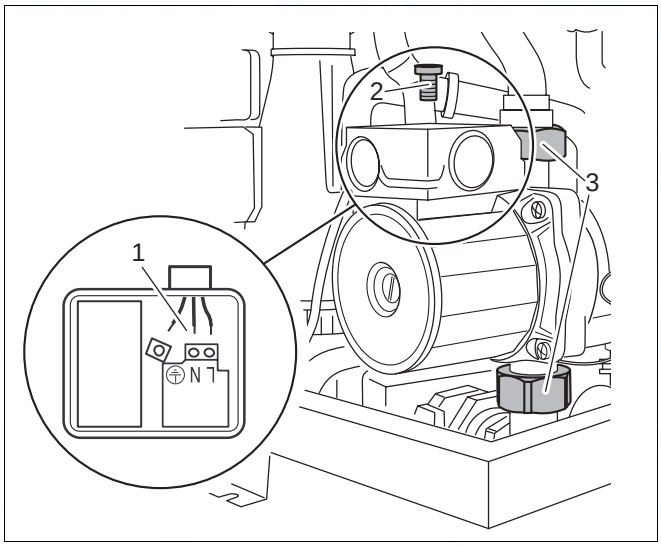

Fig. 66 600 - 11S / 19S / 24S / 24C: replacing the pump

NOTE
Fill the 600 - 11S / 19S / 24S / 24C and purge the system of air.

5.3.11 Checking the safety sensor

- Unplug cable connection from sensor.
- Measure resistance of sensor (fig. 67, item 1).
- Use a second-reading thermometer to measure the temperature around the sensor.
- Compare readings with values shown intable 8 on page 53. If there is any mismatch (i.e. > 5%), the sensor is defective.
- If the sensor is working correctly, plug it in once more.

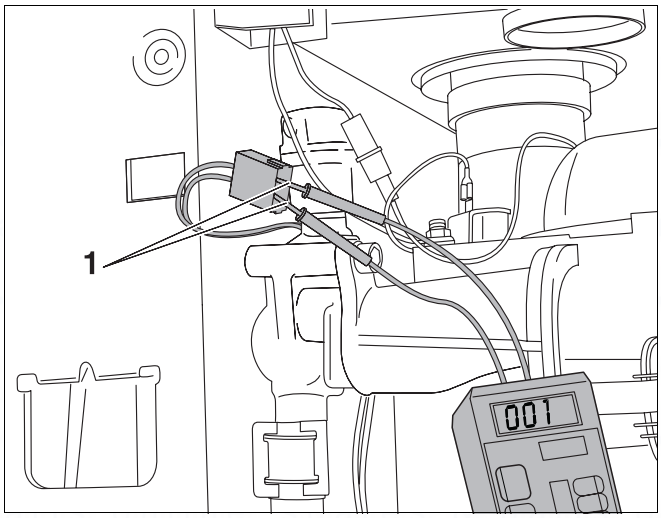

Fig. 67 600 - 11S / 19S / 24S / 24C: checking the safety sensor

5.3.12 Replacing the safety sensor

- Shut the servicing valve.
- Drain the 600 - 11S / 19S / 24S / 24C as per the "Installation and Servicing Instructions".
- Loosen the plug-in connection (fig. 68, item 1).
- Unscrew the sensor (fig. 68, item 2) and replace with a new unit.
- Plug in cable connection.
- Open servicing valves.

NOTE
Fill the 600 - 11S / 19S / 24S / 24C and purge the system of air.

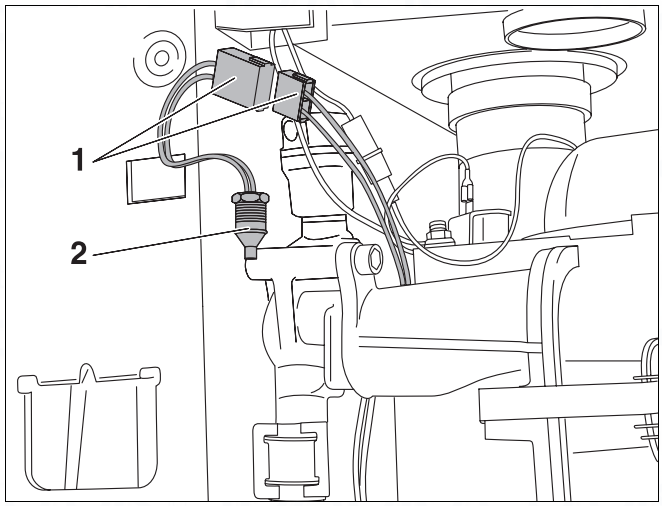

Fig. 68 600 - 11S / 19S / 24S / 24C: replacing the safety sensor

5.3.13 Checking the safety sensor connection lead

Check to ensure that all plug-in connections on the sensor and UBA are in order. Note that an incorrectly-inserted plug can lead to the generation of error messages. Start up the boiler by pressing the “reset” button.

- Set the mains switch to “**0**”.
- Disconnect the system from the power supply.
- Unplug cable connection from flow sensor.
- Disconnect 18-pin plug from UBA.
- Use a continuity tester to check the cable between the plug-in connection and the 18-pin plug in the UBA. The test should be carried out on connections 06-18 and 08-18 (fig. 69).
- If the cables are in order, plug them in.
- Connect system to mains power supply.
- Turn the mains power switch to “**I**”.

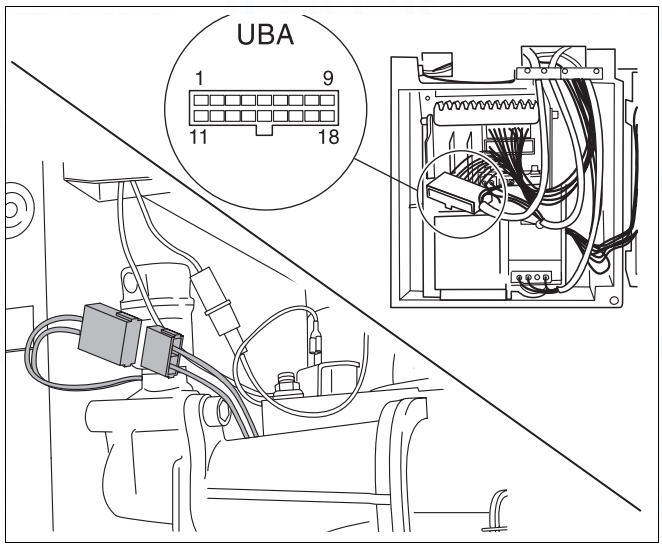

Fig. 69 600 - 11S / 19S / 24S / 24C: checking the safety sensor connection lead

5.3.14 Checking the flow sensor

- Unplug cable connection from sensor.
- Measure resistance of sensor (fig. 70, item 1).
- Use a second-reading thermometer to measure the temperature around the sensor.
- Compare readings with values shown in table 8 on page 53. If there is any mismatch (i.e. > 5%), the sensor is defective.
- If the sensor is working correctly, plug it in once more.

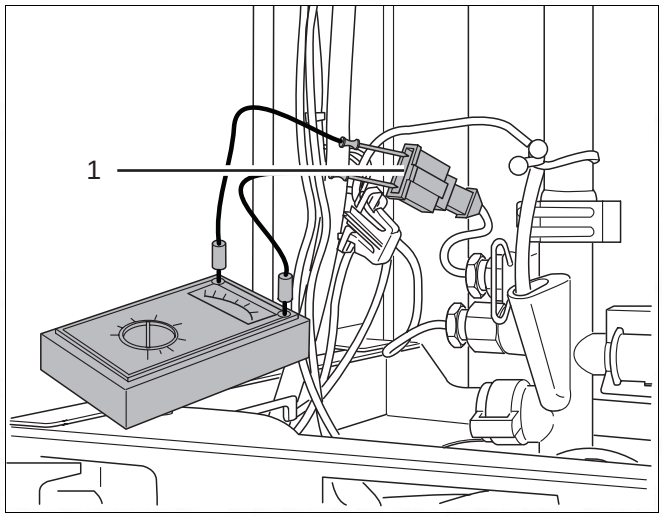

Fig. 70 600 - 11S / 19S / 24S / 24C: checking the flow sensor

5.3.15 Replacing the flow sensor

- Shut the servicing valve.
- Drain the 600 - 11S / 19S / 24S / 24C as per the "Installation and Servicing Instructions".
- Loosen the plug-in connection (fig. 71, item 1).
- Unscrew the sensor (fig. 71, item 2) and replace with a new unit.
- Plug in cable connection.
- Open servicing valves.

NOTE
Fill the 600 - 11S / 19S / 24S / 24C and purge the system of air.

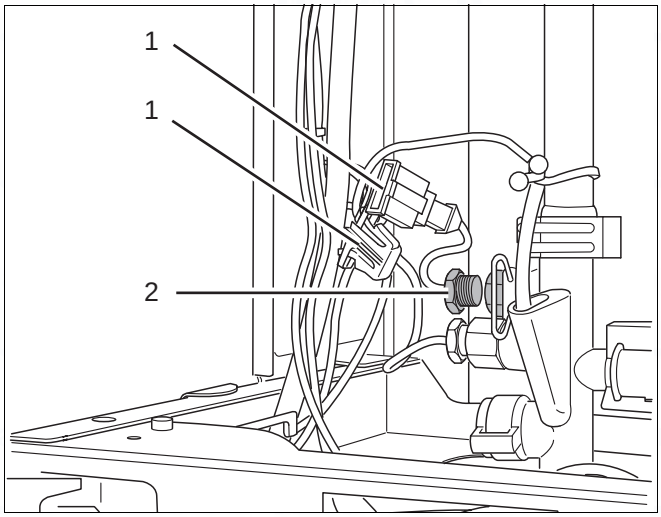

Fig. 71 600 - 11S / 19S / 24S / 24C: replacing the flow sensor

5.3.16 Checking the flow sensor connection lead

Check to ensure that all plug-in connections on the sensor and UBA are in order. Note that an incorrectly-inserted plug can lead to the generation of error messages. Start up the boiler by pressing the “reset” button.

- Set the mains switch to “**0**”.
- Disconnect the system from the power supply.
- Unplug cable connection from flow sensor.
- Disconnect 20-pin plug from UBA.
- Use a continuity tester to check the cable between the plug-in connection and the 20-pin plug in the UBA. The test should be carried out on connections 05-20 and 18-20 (fig. 72).
- If the cables are in order, plug them in.
- Connect system to mains power supply.
- Turn the mains power switch to “**I**”.

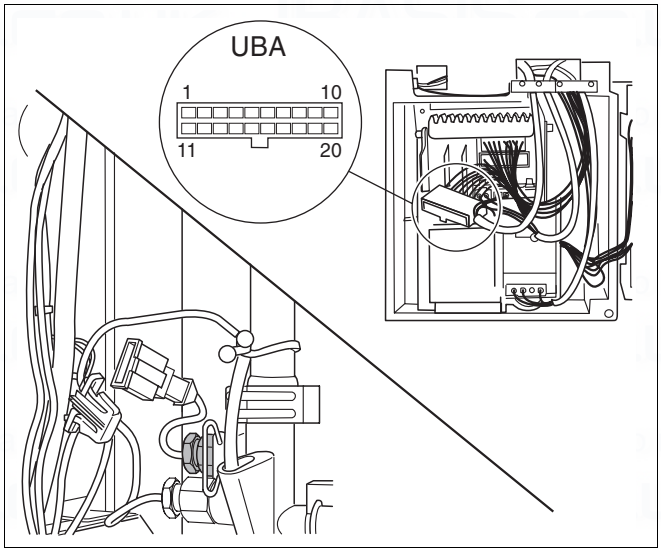

Fig. 72 600 - 11S / 19S / 24S / 24C: checking the flow sensor connection lead

5.3.17 Checking the hot water / boiler sensor

- Disconnect the plug-and-socket connection on the hot water sensor cable (fig. 73, item 1) and/or the boilersensor (fig. 73, item 2).
- Measure resistance, take a temperature reading at the thermal pressure gauge (tolerance ± 5 K) and compare with the values listed in table 8. If there is any marked mismatch, the hot-water sensor is defective.
- If the hot water / boiler sensor is in order, plug it back in.

Temperature [°C]	**Resistance** [Ω]
0	29,490
5	23,462
10	18,787
15	15,136
20	12,268
25	10,000
30	8,197
35	6,754
40	5,594
45	4,656
50	3,893
55	3,271
60	2,760
65	2,339
70	1,990
75	1,700
80	1,458
85	1,255
90	1,084
95	939.6
100	817.2

Table 8 Resistance values for hot water / boiler sensor (approximate values)

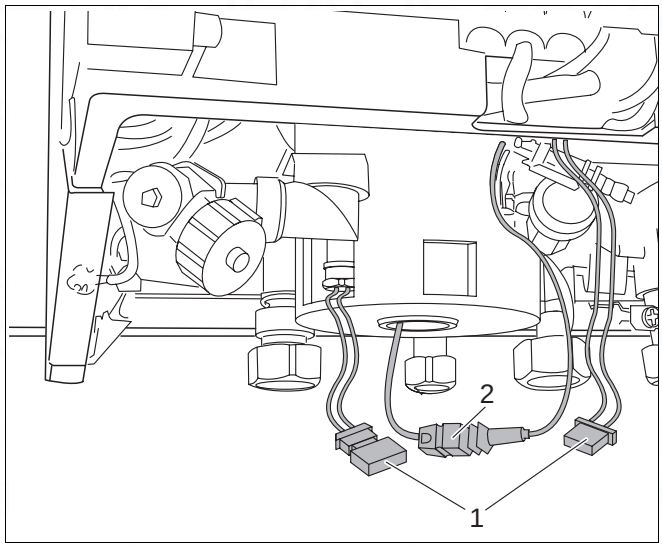

Fig. 73 Checking the hot water / boiler sensor

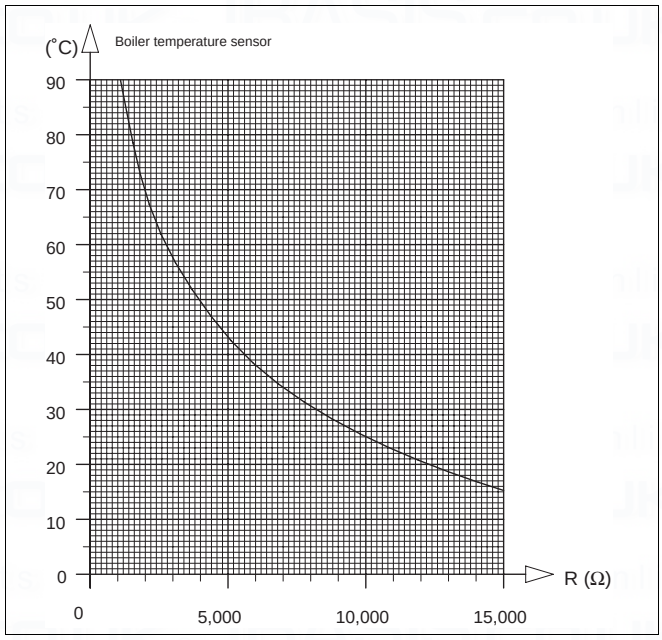

Fig. 74 Boiler temperature sensor diagram

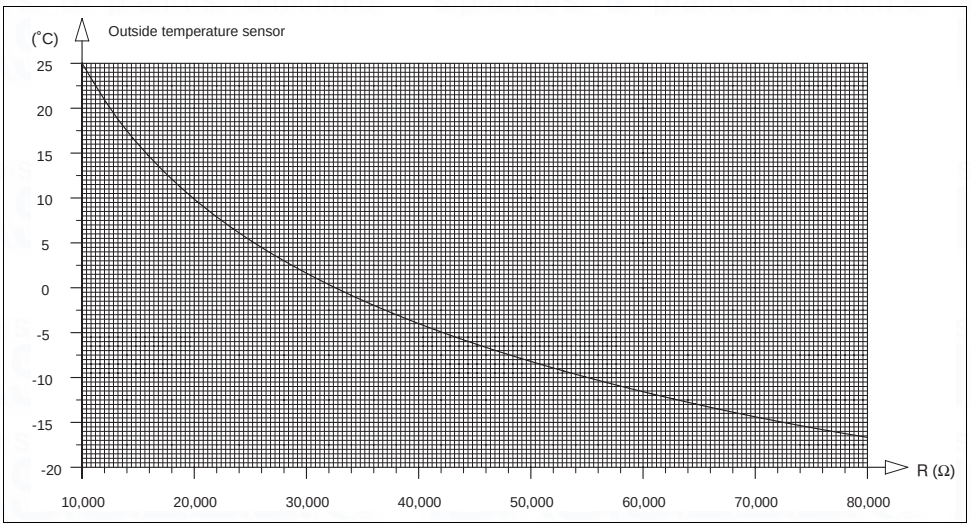

Fig. 75 Outside temperature sensor diagram

5.3.18 Changing the hot water / boiler sensor

- Shut the servicing valve.
- Drain the 600 - 11S / 19S / 24S / 24C as per the "Installation and Servicing Instructions".
- Disconnection plug-and-socket connection on cable to hot water / boiler sensor.
- Remove insulation mounting (fig. 76, item 1) and detach insulation.

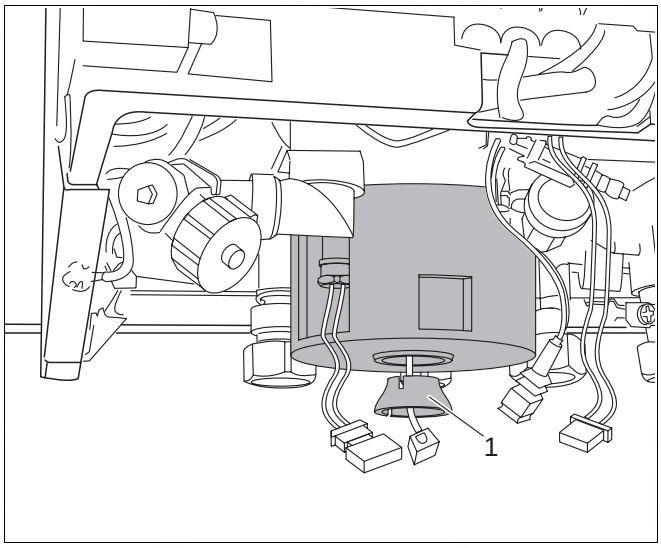

Fig. 76 Changing the hot water / boiler sensor

- Pull out the sensor fuses (fig. 77).
- Unscrew hot water / boiler sensor and replace with new unit.
- Refit insulation and corresponding mounting elements.
- Plug cable connection in once more.
- Open servicing valves.
- Fill the 600 - 11S / 19S / 24S / 24C and purge the system of air as indicated in the installation and servicing instructions.

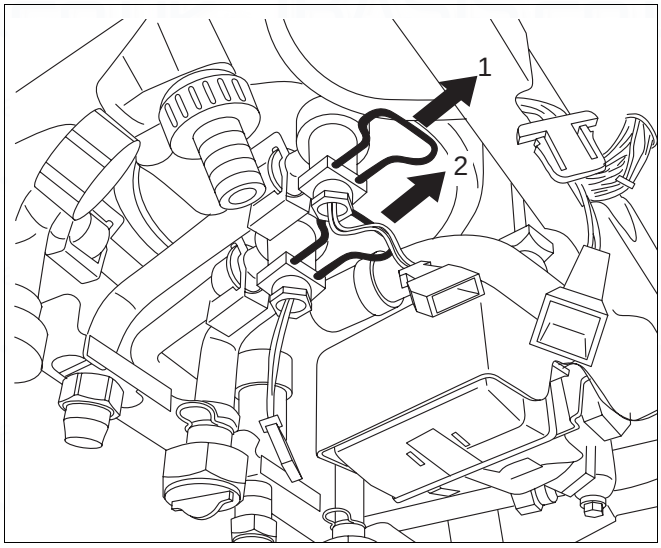

Fig. 77 Changing the hot water / boiler sensor

5.3.19 Checking the hot surface ignitor

- Disconnect the system from the power supply.
- Loosen crosshead screw on UBA housing.
- Swivel UBA housing downwards.
- Open the UBA housing.
- Unplug and remove hot surface ignitor from UBA housing (fig. 78).
- Check hot surface ignitor for free throughput.
  If throughput is free, the hot surface ignitor is in order.
- If the hot surface ignitor is in order, plug the cable into the UBA housing.
- Shut the UBA housing.
- Swivel the UBA housing upwards and screw into place.
- Connect system to mains power supply.

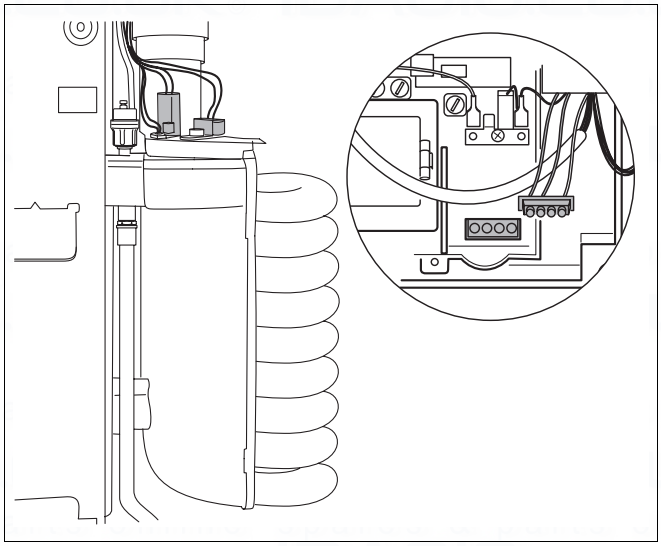

Fig. 78 Checking the hot surface ignitor

5.3.20 Replacing the hot surface ignitor

- Disconnect the system from the power supply.
- Remove combustion-chamber cover.
- Remove the earth (ground) lead from the hot surface ignitor (fig. 79, item 1).

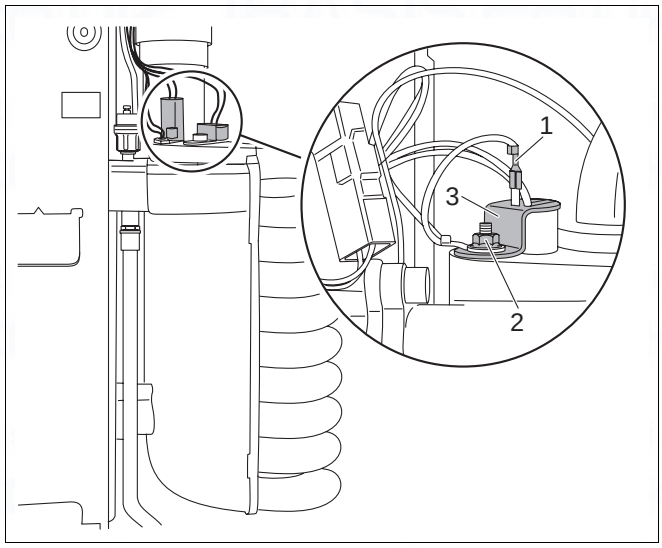

Fig. 79 Replacing the hot surface ignitor

- Loosen crosshead screw on UBA housing.
- Swivel UBA housing downwards.
- Open the UBA housing.
- Unplug hot surface ignitor connection cable from UBA housing (fig. 80).
- Loosen nut on clamp used to secure earth (ground) lead (fig. 79, item 2).
- Detach retaining plate of hot surface ignitor (fig. 79, item 3) and remove hot surface ignitor.

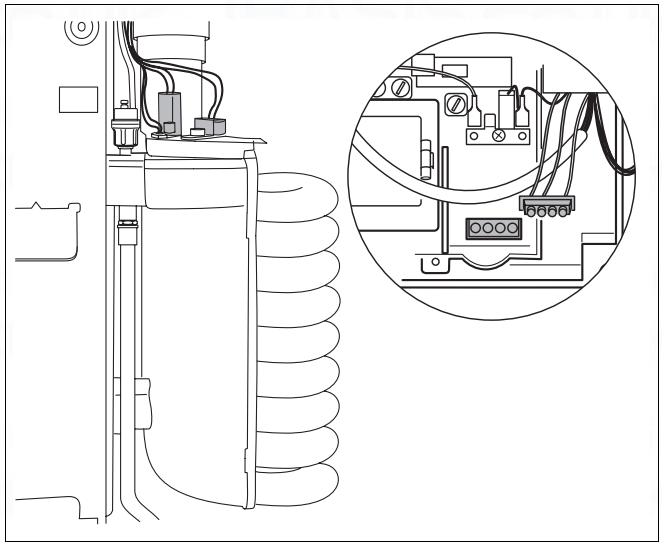

Fig. 80 Disconnect the plug-in cable from the UBA housing

5.3.21 Measuring the ionisation current

- Disconnect the system from the power supply.
- Loosen the plug-and-socket connector of the monitoring cable and connect the measuring device in series. Select the µA direct current range on the multimeter. The multimeter must have a resolution of at least 1 µA.
- Reconnect the system to the power supply and turn the chimney-sweep switch to “**1**”.
- Measure the ionisation current. The ionisation current must be > 2 µA DC.
- Enter the reading on the report form.
- Disconnect the system from the power supply.
- Remove the measuring device and restore the plug-and-socket connection to its original state.
- Turn the chimney-sweep switch to position “**0**”.
- Refit the cover for 2nd operating level.
- Reconnect the system to the power supply. When the display shows “**7**”, press the service button to display “**c**”. Press the "reset" button. The display shows “**r**”.

5.3.22 Replacing the ionisation electrode

- Remove the CombiVENT air combination unit.
- Loosen the plug-and-socket connection of the ionization electrode.
- Loosen screw (fig. 81, item 1) by a half-turn and slide bar to remove.
- Pull electrode to remove, and fit new unit.
- Reassemble by following the above procedure in reverse.

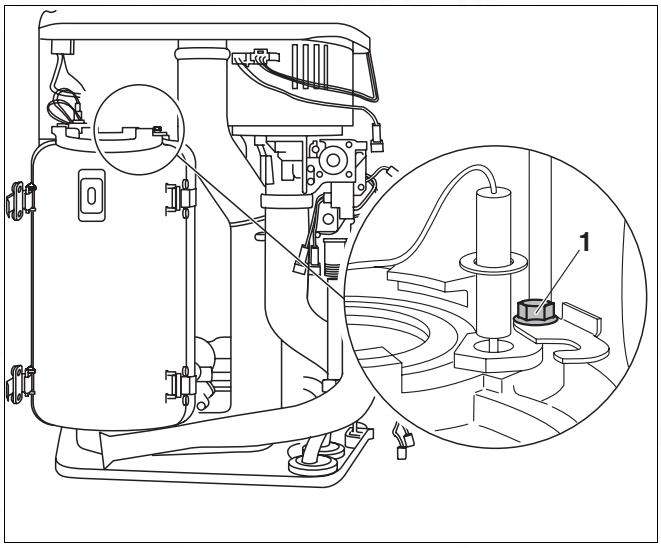

Fig. 81 Replacing the ionisation electrode

5.3.23 Checking the three-way motorised valve for correct operation

- Disconnect the system from the power supply, set mains switch to "**0**".
- Dismantle condensate trap.
- Remove protective cap from three-way valve.
- Remove bottom insulation from internal hot-water reservoir (applies to 600 - 24C only).
- Push in catch on regulating motor and
- Remove bayonet connector by twisting anticlockwise.
- Remove regulating motor.
- Set the mains switch to "**I**" and press the "reset" button.
- Once the 600 - 11S / 19S / 24S / 24C is in operation, open one of the hot-water taps.
  The UBA displays " ⚌ " for hot water. If the regulating motor starts up (check for movement of adjusting lever), the motorised head is working.
- Shut the hot-water tap.
- Set the mains switch to "**0**".
- If the motorised head is working, attach the regulating motor and lock into place by twisting the bayonet connector.
- Connect the system to the power supply, set the mains switch to "**I**" and press the "reset" button.

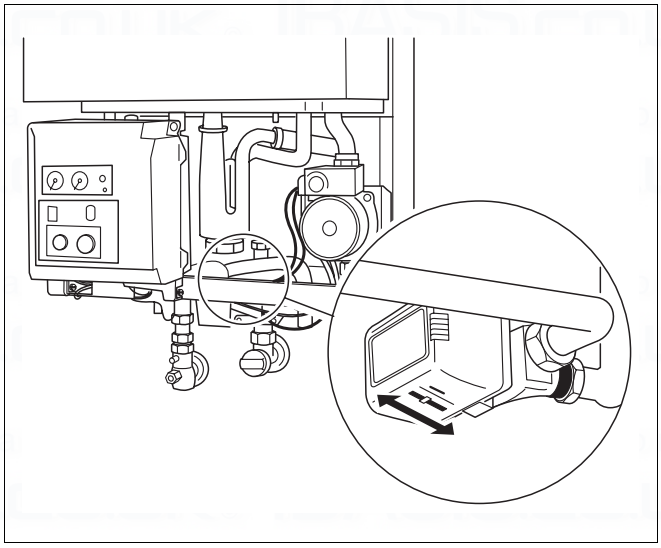

Fig. 82 600 - 11S / 19S / 24S / 24C: checking the motorised head for correct operation

5.3.24 Replacing the motorised valve body control valve

- Shut the servicing valve and drain the 600 - 11S / 19S / 24S / 24C as per the "Installation and Servicing Instructions".
- Dismantle condensate trap.
- Remove protective cap from three-way valve.
- Remove bottom insulation from internal hot-water reservoir (applies to 600 - 24 C only).
- Push in catch on regulating motor and remove bayonet connector by twisting anticlockwise.
- Remove regulating motor.
- Remove the control valve with a spanner and fit a new unit (fig. 83).
- Fit regulating motor and lock into place by twisting the bayonet connector.
- Reconnect the cable plug.

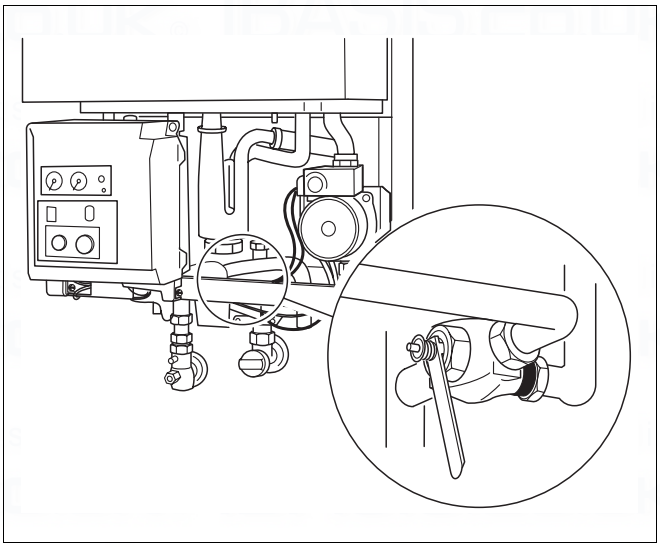

Fig. 83 600 - 11S / 19S / 24S / 24C: replacing the control valve

NOTE
Open servicing valves, fill the 600 - 11S / 19S / 24S / 24C and purge the system of air.

- Set the mains switch to “**I**” and press the “reset” button.

5.3.25 Replacing the three-way valve

NOTE
Replace the three-way valve only if leaking occurs on the screw-in pipe connectors.
A: Mains water, **B**: Heating,
AB: Boiler flow line

- Shut the servicing valve and drain the 600 - 11S / 19S / 24S / 24C as per the "Installation and Servicing Instructions".
- Dismantle condensate trap.
- Remove protective cap from three-way valve.
- Remove bottom insulation from internal hot-water reservoir (applies to 600 - 24 C only).
- Push in catch on motorised valve head and remove bayonet connector by twisting anticlockwise.
- Remove motorised head.
- Loosen the 3 compression nuts (fig. 84).
- Remove three-way valve and fit new unit.
- Tighten the 3 compression nuts.
- Fit motorised valve head and lock into place by twisting the bayonet connector.
- Reconnect the cable plug.

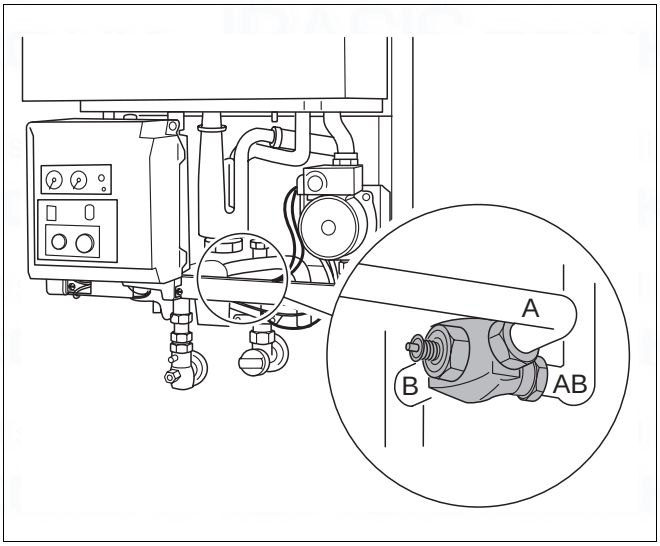

Fig. 84 600 - 11S / 19S / 24S / 24C: replacing the three-way valve

NOTE
Open servicing valves, fill the 600 - 11S / 19S / 24S / 24C and purge the system of air.

- Connect the system to the power supply, set the mains switch to “**I**” and press the “reset” button.

5.3.26 Checking the ERC/RC connections to the UBA

- Disconnect the system from the power supply.
- Loosen crosshead screw on UBA housing.
- Swivel the UBA housing downwards (fig. 85).
- Push in UBA housing on left-hand side and open to the right (fig. 86).
- Check to ensure that ERC or RC are correctly connected to 3 and 4.
- Terminals 1 and 2 should not be wired in any way.
  The unit is supplied with a dummy connector between terminals 1 and 2 (fig. 87). The DC voltage at terminals 3 and 4 should be approx. 11.5 V. If this is not so, the UBA or the cable harness is defective.

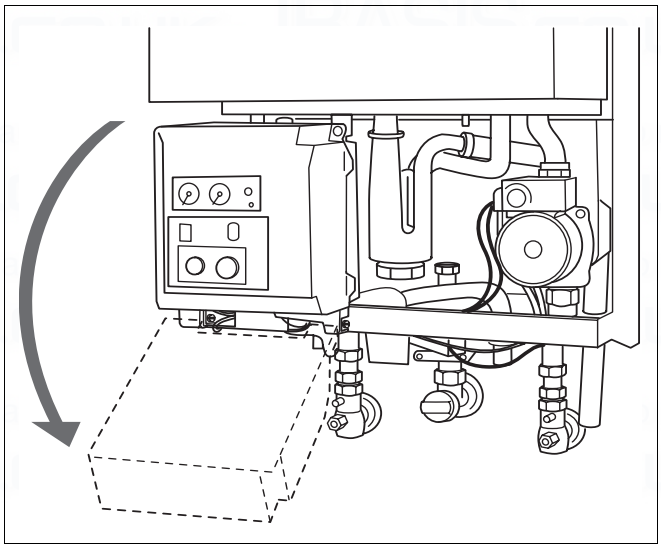

Fig. 85 Swivel UBA housing downwards

- Shut the UBA housing once more.
- Swivel the UBA housing upwards and screw into place.
- Connect system to mains power supply.
- Set the mains switch to “**I**” and press the “reset” button.

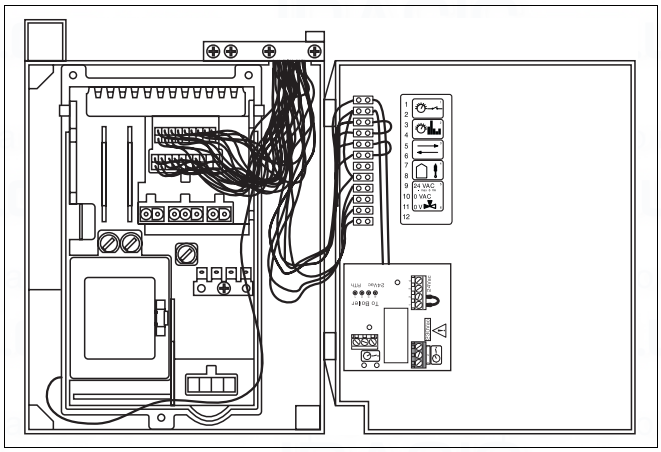

Fig. 86 Opening the UBA housing

5.3.27 Replacing the terminal strip

- Note order of cable terminals. Loosen all cables.
- Connect the cables, in the right order, to the new terminal strip.

5.3.28 Checking connections at the ModuLine

- Check contact link between cable and ModuLine.
- There should be a DC voltage of approx. 11.5 V at the ModuLine.

NOTE
It is possible, in order to limit the source of errors, to disconnect the ModuLine from the boiler (bridge required at 3 and 4) and to install a conductor bridge at 1 and 2 (fig. 87).
The heating and hot-water requirement is then passed via the potentiometer setting of the UBA.

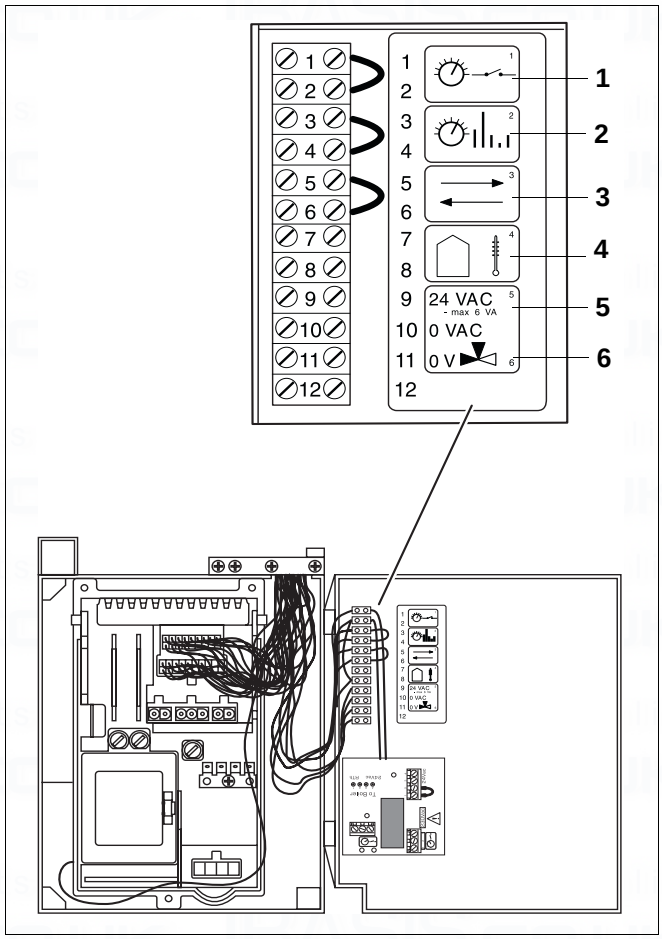

Fig. 87 Checking the controller-device connections at the boiler

Key to control-device connections:

Item 1: ON/OFF temperature controller

Item 2: ModuLine room temperature controller (digital)

Item 3: I/O port / communication port

Item 4: Outdoor-temperature sensor

Item 5: Power supply 24 VAC/max. 6 VA

Item 6: Turn-on voltage for three-way valve (9+11)

5.3.29 Checking KIM connections

- Locate KIM on boiler frame under UBA housing.
- Check 4 pin connector (fig. 88, item 1) is fitted and secure.

NOTE
This is not a serviceable part and any fault identified with this component, contact Boulter Buderus.

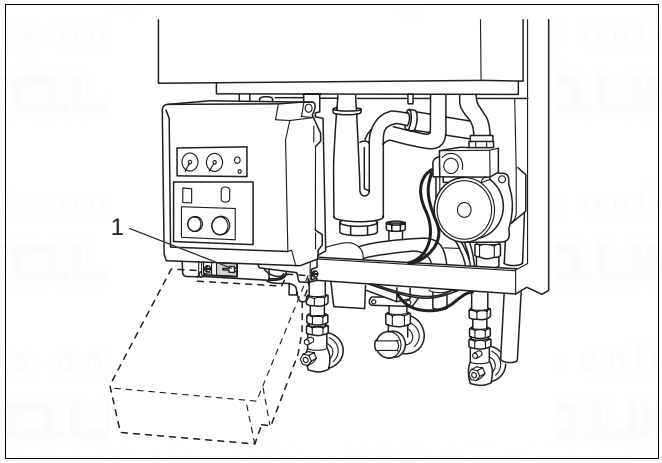

Fig. 88 KIM connections

6 Changing to another type of gas

WARNING!
Work on components in contact with gas must only be carried out by a registered CORGI engineer.

Switch off the heating boiler

- Disconnect the system from the power supply.
- Close the gas shutoff valve.
- Loosen the fixing screw and remove cover.
- Open snap locks (fig. 89, item 1) and remove combustion chamber cover.

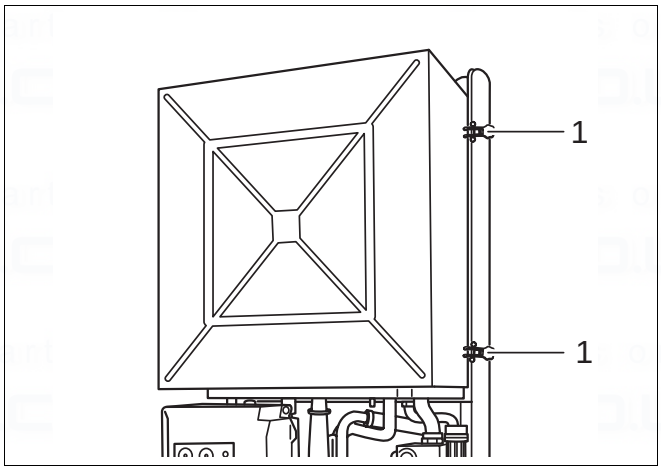

Fig. 89 Open snap locks

- Loosen union nut on gas valve assembly (fig. 90, item 4).
- Release plug-in connection of fan power lead (fig. 90, item 1), burner-control unit fan control lead (fig. 90, item 2) and gas-burner assembly (fig. 90, item 3).

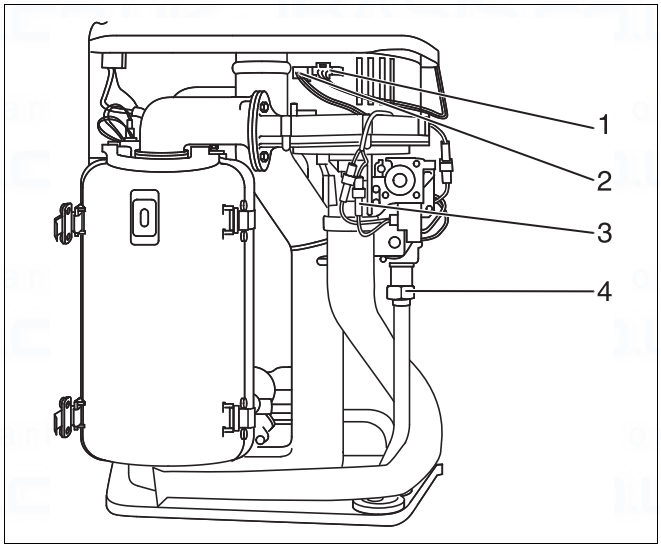

Fig. 90 Loosen the union nut and remove the cable

- Push safety plate out of way (fig. 91, item 1).
- Turn air suction tube and pull off from below.

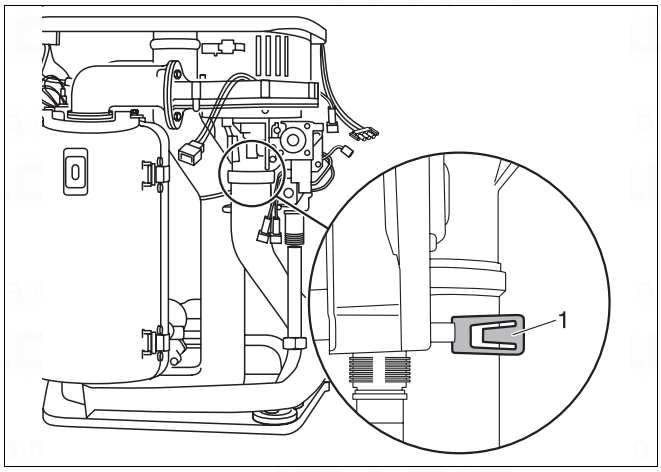

Fig. 91 Remove safety plate

- Swivel the air combination unit forwards (fig. 92, item 1).
- Pull the air combination unit up and out of the bayonet connector (fig. 92, item 2) and remove via the front of the unit.

Type of gas supply	Gas nozzles ∅ [mm]		Venturi tubes
	11S	19S/24(C)	
Natural gas **E** (G20) (includes natural gas **H**)	5.55	6.5	Standard Venturi tubes
Propane **P** (G31)	3.40	4.15	Standard Venturi tubes

Table 9 Gas-nozzle diameter

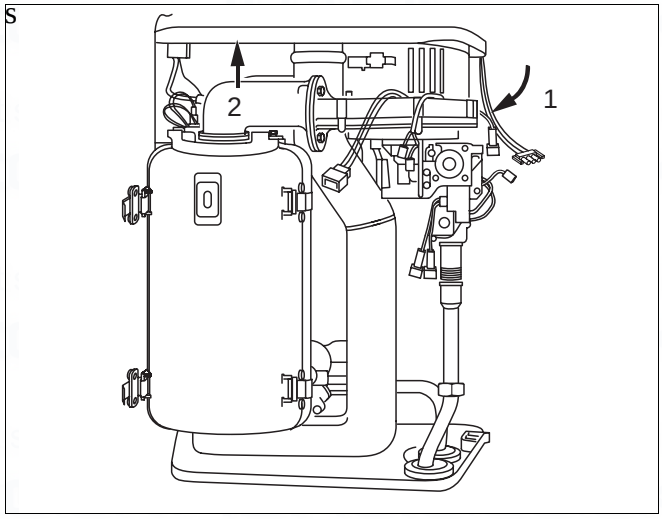

Fig. 92 Remove the air combination unit

Replacing a gas nozzle

WARNING!
Conversion to another gas type is implemented by installing/removing a gas nozzle (fig. 93, item 3) of the appropriate gas nozzle diameter (table 9).

- Undo the three screws (fig. 93, item 2) on the long side of the gas fitting.
- Remove the gas nozzle and insert the correct gas nozzle for the new gas type.
- Insert new seal (fig. 93, item 4).
- Remount all components in the reverse sequence.
- Cover stickers (fig. 94, item 1) with the new stickers (2 pieces, included in conversion kit).

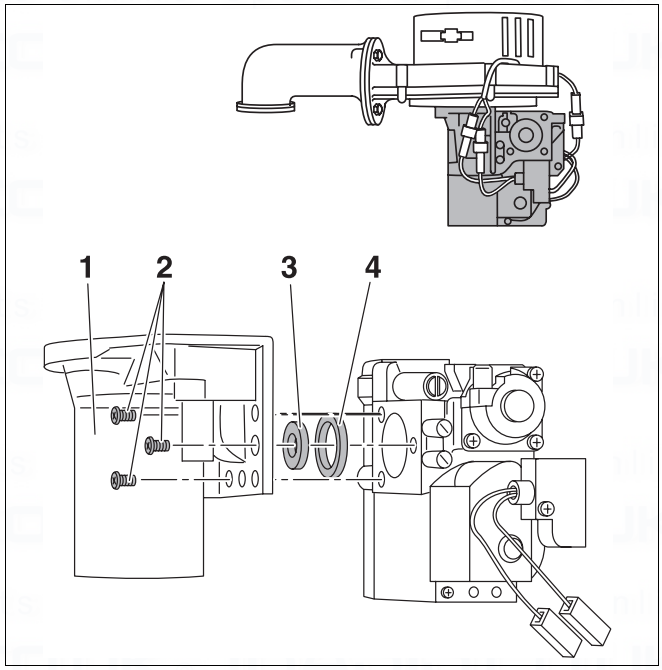

Fig. 93 Replacing a gaz nozzle

Starting up

- Start up the appliance following the procedure described in the mounting and maintenance instructions.
- Include all seal areas concerned during mounting in the gas-tightness check when in operation.
- Refit all covers.

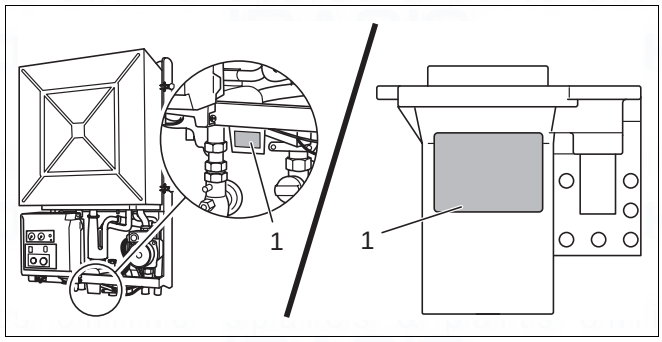

Fig. 94 Place new stickers

7 Appendix

7.1 Technical specifications

Dimensions	Unit	600 Series wall-mounted condensing gas boiler			
		11S	19S	24S	24C
Type of gas supply as established in EN 437 (GB)		GB II_{2H3P} 20 mbar, 37 mbar (natural gas **H** and propane **P**)			
Rated thermal load for hot water tank	kW kW	4.5 - 10.5 4.5 - 13.0	9.0 - 18.2	9.0 - 23.0	9.0 - 23.0
Rated heating capacity for system temperature (modulating from 30° to 100°) Heating curve 75/60 °C Heating curve 40/30 °C	 kW kW	 4.3 - 10.0 4.9 - 11.0	 8.6 - 17.4 9.7 - 19.0	 8.6 - 22.0 9.7 - 24.0	 8.6 - 22.0 9.7 - 24.0
Seasonal efficiency (SEDBUK)	%	90.3	90.3	90.2	90.1
Central heating installation					
Heating water temperature	°C	40 - 80			
ΔT at residual head of 200 mbar	K	<20			
Max. operating overpressure of boiler	bar	3.0			
Volume heat exchanger heating circuit	l	1.0			
Pump stopping time heating circuit Position 1 Position 2	 min h	 4 24			
Expansion vessel					
Capacity of expansion vessel	l	12			
Admission pressure of expansion vessel	bar	0.75			
Hot water tank (type 24C)					
Hot water capacity of heat exchanger	l	-	-	-	0.95
Outlet flow at 60 °C (ΔT = 50 °C)	l/min	-	-	-	6.5 (type 24C)
Adjustable hot water temperature	°C	40 - 60			
Minimum connection pressure	bar	0.75			
Maximum connection pressure	bar	10			

Dimensions	Unit	600 Series wall-mounted condensing gas boiler			
		11S	19S	24S	24C
Pipe connections					
Gas		G1 (device) / R½ (accessory)			
Heating water		G¾ (device) / R¾ (accessory)			
Domestic water		G½ (device) / R½ (accessory)			
Condensate-water outlet	mm	32			
Flue gas values					
Condensate water quantity, natural gas, 40/30 °C	l/h	0.7	1.3	1.6	1.6
pH value of condensate water		approx. 4.1			
Exhaust-fume mass-flow rate Full load Part-load	 g/s g/s	 4.9 2.2	 8.4 4.3	 10.6 4.3	 10.6 4.3
Exhaust-fume temperature, full load Heating curve 75/60 °C Heating curve 40/30 °C	 °C °C	 75 50	 85 55	 95 55	 95 55
Exhaust-fume temperature, part-load Heating curve 75/60 °C Heating curve 40/30 °C	 °C °C	 65 40	 70 45	 70 45	 70 45
CO_2 full load, natural gas standard test gas G20	%	9.2			
CO_2 full load, natural gas standard test gas G31 propane	%	10.3			
Standard emission factor CO	mg/kWh	<22			
Standard emission factor NO_x	mg/kWh	<30			
Flow pressure available for use	Pa	35	60	100	100
Flue-gas system					
Type of exhaust-fume connection		C_{13}, C_{33}, C_{53}			
Diameter of flue gas system	mm	60/100			
Electrical data					
Mains connection voltage	V	230			
Electrical power consumption Full/Part load	W	105/100	110/105	115/105	115/105
Electrical protection rating		IPX4D			
Boiler dimensions and weight					
Height x Width x Depth	mm	850 x 480 x 370			
Weight (without casing)	kg	39	40	40	45
Casing	kg	7	7	7	7

7.2 Short list of spare parts

The following are parts commonly required due to damage or expendability. Their failure or absence is likely to affect safety or performance of this appliance. For a pictorial representation of the part see the respective position number on the exploded view pictures on pages 7 and 8.

	Description	Product No.
1	Flow connection piece	73581
2	Automated air vent	38618
3	Hairpin heat exchanger	73582s
4	Flow sensor	38323
5	Clip	73056s
6	Flow pipe	73613
7	Clip flow pipe	38602s
8	Back part heat exchanger	73611
9	Seal heat exchanger	73578
10	Sealing ring burner	73571s
11	Burner 11S / 19S and 24(C)	73593 / 73594
12	Heat exchanger	73612
13	Front panel heat exchanger	73610
14	Sight glass	73576
15	Fastener	75132s
16	Ventilation cover	75135
17	Casing	38091
18	Syphon	73589
19	Syphon cap with seal	73124
20	Drain pipe	73592
21	Sealing ring	73561
22	Flue gas sensor	73376
23	Sealing ring	73736
24	Flue gas pipe	73743
25	Flue gas pipe seal	73579
26	Condensate collector	73630
27	Lipring	73563
28	Combustion divider	73587
29	Insulation divider	73515
30	Fan	73366
31	Gas/air supply pipe	73570
32	Fan seal	73565
33	Venturi 11S / 19S and 24(C)	73567 / 73568
34	Gas valve	73278
35	Rectifier	38355
36	Suction pipe	73573
37	Gas pipe	73279
38	Concentric adapter	77463
39	Lip ring	77464
40	Adapter clip	38496
41	Bracket	38092
42	Cable duct	38463s
43	Ventilation cover seal	38456
44	Pipe duct	38462s
45	Sealing ring	73561

	Description	Product No.
46	Cable harness	73371
47	UBA	38324
48	Power switch	38340
49	Temp-pressure gauge	75300
50	UBA panel	38488
51	230V cable	75301
52	O-ring	73580s
53	O-ring	73584s
54	Return pump connection pipe	73616
55	1-speed pump / 3-speed pump	75302 / 75303
56	Expansion vessel	38461
57	Expansion vessel pipe	38621
58	Manifold assembly	20378
59	Pressure relief valve	73199
60	Spring set	73531
61	Connection house by-pass	38611
62	Clip by-pass	38483
63	Connection house three-way valve	38614
64	Spring set	73531
65	Connection housing pump	73617
66	Connection housing	38611
67	Clip	38475s
68	By-pass pipe	38610
69	DHW pipe (hot)	38601
70	Clip	38474s
71	DHW supply pipe	73614
72	Hot water sensor	38352
73	Boiler sensor	38353
74	Insulation hot water tank	38493
75	DHW pipe (cold)	38605
76	RTH converter 230V	78091
82	Ionisation electrode	38320

8 Reports

8.1 Start-up report

- Please check off the start-up tasks carried out and enter the corresponding readings.

Initial start-up tasks	Remarks or measurement readings
1. Note down gas characteristics: Wobbe-index Operating heat value	 _____ kWh/m^3 _____ kWh/m^3
2. Inspect to check for leaks (See section 2.1.2 on page 23)	☐
3. Check combustion air/flue gas connection (See section 2.1.4 on page 24)	☐
4. Checking the boiler equipment (change to another type of gas if necessary) (See section 2.1.5 on page 25)	☐
5. Carry out adjustment settings (See section 2.1.8 on page 26)	☐
6. Measure the gas connection pressure (flow pressure) (See section 2.1.11 on page 27)	_____ mbar
7. Checking and adjusting the gas/air -ratio CO_2-content: at full load at part load (See section 2.1.12 on page 27)	_____ Pa _____ % _____ %
8. Leak test in operational condition	☐
9. Measure carbon monoxide content (CO), vacuum (See section 2.1.14 on page 28)	_____ ppm
10. Function testing Measuring the ionisation current (See section 2.1.15 on page 28)	☐ _____ µA
11. Fit the boiler casing	☐
12. Instruct the user. Fill in Benchmark log book. Hand over documentation. (See section 2.1.16 on page 29)	☐
13. Confirm initial start-up Confirmation of initial start-up by qualified service technician (Company stamp, signature)	

8.2 Inspection and maintenance reports

The inspection and maintenance reports provide an overview of all the tasks and operations carried out.

See also Section 3: "Inspection“ on page 30 or Section 4: "Maintenance“ on page 31.

Please check off the inspection and/or requirement-related maintenance tasks carried out and enter the corresponding readings.

- Sign details of inspection and maintenance tasks, indicating date carried out.

Use only original replacement parts.

Inspection tasks	Date: _____	Date: _____
1. Check general state of system	☐	☐
2. Visual inspection and function check of system	☐	☐
3. Check gas- and water-bearing components for - leaks - signs of corrosion - signs of ageing	☐	☐
4. Take system out of service and check the burner, heat exchanger and siphon for signs of dirt and soiling. (See section 4.1.1 on page 31)	☐	☐
5. Check the burner, hot surface ignitor and ionisation electrode, after disconnecting the system. (See section 4.1.1 on page 31)	☐	☐
6. Measuring the ionisation current (See section 2.1.15 on page 28)	_____ µA	_____ µA
7. Measure the gas connection pressure (flow pressure) (See section 2.1.11 on page 27)	_____ mbar	_____ mbar
8. Check the gas-air ratio (See section 2.1.12 on page 27)	_____ Pa	_____ Pa
9. Gas leak test in operational condition (See section 2.1.2 on page 23)	☐	☐
10. Measure the carbon monoxide content (CO), vacuum (See section 2.1.14 on page 28)	_____ ppm	_____ ppm
11. Pressure-testing of heating system: - admission pressure of expansion tank (see installation instructions supplied with expansion tank) - Filling pressure	_____ mbar _____ mbar	_____ mbar _____ mbar
12. Check ventilation and exhaust conduits for correct functioning and safety	☐	☐
13. Check requirement-related adjustment settings of control device (see documentation supplied with control device)	☐	☐
14. Final check of inspection tasks, with record kept of measurement readings and test results	☐	☐
15. Confirm inspection carried out by qualified service engineer and fill out the **Benchmark** Company stamp / Date / Signature)		

Date: _____	Date: _____	Date: _____	Date: _____	Date: _____
☐	☐	☐	☐	☐
☐	☐	☐	☐	☐
☐	☐	☐	☐	☐
☐	☐	☐	☐	☐
☐	☐	☐	☐	☐
_____ µA	_____ µA	_____ µA	_____ µA	_____ µA
_____ mbar	_____ mbar	_____ mbar	_____ mbar	_____ mbar
_____ Pa	_____ Pa	_____ Pa	_____ Pa	_____ Pa
☐	☐	☐	☐	☐
_____ ppm	_____ ppm	_____ ppm	_____ ppm	_____ ppm
_____ mbar _____ mbar	_____ mbar _____ mbar	_____ mbar _____ mbar	_____ mbar _____ mbar	_____ mbar _____ mbar
☐	☐	☐	☐	☐
☐	☐	☐	☐	☐
☐	☐	☐	☐	☐

Requirement-related maintenance tasks	Date: _____	Date: _____
1. Clean heat exchanger, burner and condensate trap (See section 4.1 on page 31)	☐	☐
2. Check and adjust the gas-air ratio CO_2-content: at full load at part load (See section 2.1.12 on page 27)	_____ Pa _____ % _____ %	_____ Pa _____ % _____ %
3. Confirm servicing work Confirmation of servicing carried out by qualified technician Company stamp, signature)		

Date: _____	Date: _____	Date: _____	Date: _____	Date: _____
☐	☐	☐	☐	☐
_____ Pa _____ % _____ %	_____ Pa _____ % _____ %	_____ Pa _____ % _____ %	_____ Pa _____ % _____ %	_____ Pa _____ % _____ %

Notes

spares & parts online IBASIS.CO.UK

Notes

spares & parts online IBASIS.CO.UK

Boulter Buderus

Heating system specialist:

Boulter Buderus Ltd.
Magnet House

30 Whitehouse Road
Ipswich
Suffolk, IP1 5JA
Telephone: 01473 241555
Fax: 01473 241321/463411

http://www.boulter-buderus.co.uk
e-mail: info@boulter-buderus.co.uk

720.967A - 4003 - 05/2004

spares & parts online IBASIS.CO.UK

Servicing manual

Wall-mounted condensing gas boiler
600 Series - 11S / 19S / 24S / 24C

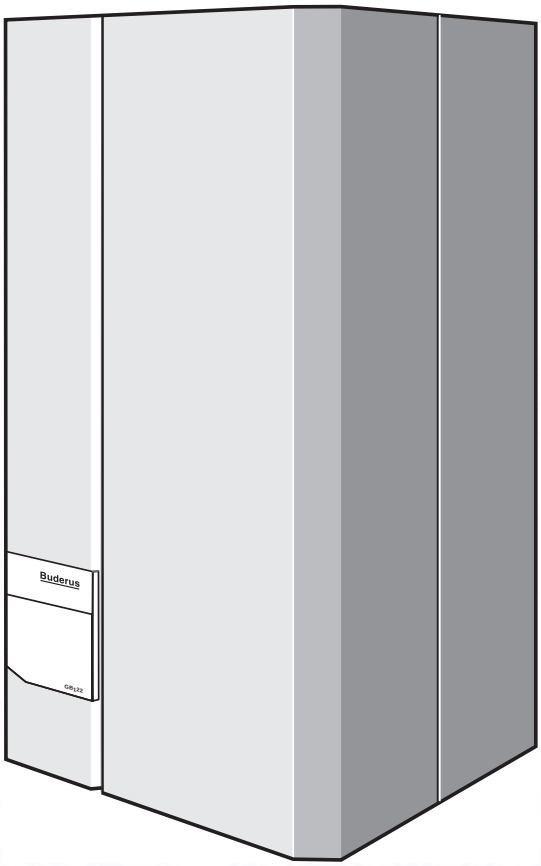

Buderus

List of contents

1 Messages – Universal Automatic Burner (UBA) 3
1.1 UBA status display 3
1.2 UBA operating level 1.5 4
1.3 Service tool 4
1.4 Operating messages 5
1.5 Fault messages 6

2 Faults that the UBA does not display . . . 8

3 Troubleshooting 9
3.1 Troubleshooting tasks 47
3.1.1 Unblocking the 600 Series 11S / 19S / 24S / 24C 47
3.1.2 Chimney-sweep mode 47
3.1.3 Removing and refitting the outer casing 48
3.1.4 Removing and refitting the combustion-chamber cover 48
3.1.5 Checking the exhaust-gas sensor 49
3.1.6 Replacing the exhaust-gas sensor 49
3.1.7 Checking the air intake and outlet openings 50
3.1.8 Replacing the UBA 50
3.1.9 Checking the fan 51
3.1.10 Replacing the fan 51
3.1.11 Checking the wiring connections of the UBA 53
3.1.12 Checking the miniature fuses 53
3.1.13 Checking the connections for the second solenoid valve, modulating pump and floor thermostat switching contact 53
3.1.14 Checking the circulation pump 54
3.1.15 Replacing the circulation pump 54
3.1.16 Checking the safety sensor 55
3.1.17 Replacing the safety sensor 55
3.1.18 Checking the safety sensor connection lead 55
3.1.19 Checking the feed sensor 56
3.1.20 Replacing the feed sensor 56
3.1.21 Checking the feed sensor connection lead 56
3.1.22 Checking the domestic hot water / mains water supply 57
3.1.23 Changing the domestic hot water / mains water supply 58
3.1.24 Checking the incandescent firing electrode 59
3.1.25 Replacing the incandescent firing electrode 59
3.1.26 Checking the gas-burner control system for correct activation 60
3.1.27 Replacing the gas burner fitting 60
3.1.28 Checking and adjusting the gas-to-air ratio 62
3.1.29 Measuring the ionisation current 63
3.1.30 Replacing the ionisation electrode 63
3.1.31 Checking the 3-way motorised valve for correct operation 64
3.1.32 Replacing the motorised valve body control valve 64
3.1.33 Replacing the three-way valve 65
3.1.34 Checking the ERC/RC connections to the UBA . 66
3.1.35 Replacing the terminal strip 66
3.1.36 Checking connections at the ERC or RC 67
3.1.37 Replacing the room-temperature control device . 67

Preface

Important general instructions for use

This device should only be operated in accordance with its designated use and the indications given in the servicing instructions. All maintenance and repair operations must be carried out by a qualified service technician.

Always operate in conjunction with original accessories, and use only genuine spare parts. Other combinations of units, accessories and consumables are only to be used if they completely fulfil the specifications involved, and if system performance and safety are not affected in any way.

Note that all the servicing tasks described here must be carried out by a qualified maintenance firm. Work on gas pipes and fittings must only be carried out by a CORGI registered engineer.

Subject to technical modifications

As a result of our policy of constant development, there may be small differences between illustrations, functional steps and technical data.

CE

The boiler meets the basic requirements of the appropriate standards and directives.

Conformity has been substantiated by the proper documents which - together with the declaration of conformity - are filed with the manufacturer.

benchmark™

BENCHMARK' Log Book

All Boulter Buderus gas boilers now include an Installation, Commissioning and Service record log book. The details of the log book will be required in the event of any warranty work being requested.
Please complete the appropriate section at each service visit.

REMEMBER: Please hand the log book back to the user.

1 Messages – Universal Automatic Burner (UBA)

1.1 UBA status display

Operational condition and error messages appear on the display of the Universal Automatic Burner (UBA).
The message consists of two characters.
The first character is displayed automatically.

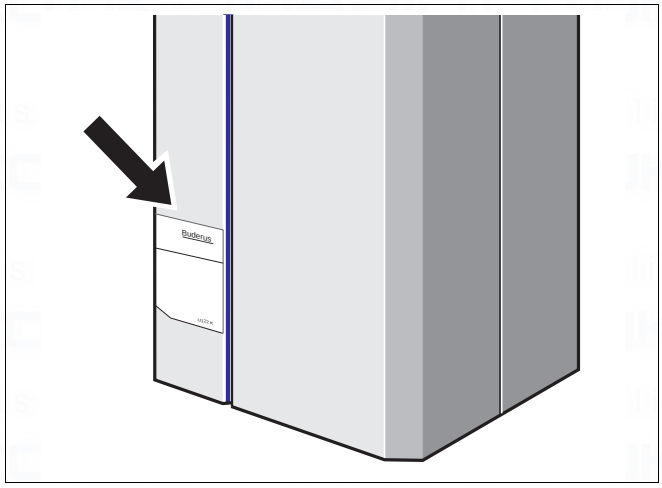

Fig. 1 600 Series 11S / 19S / 24S / 24C: Display

To display the second character:

- Hinge the control panel cover to the left to open.

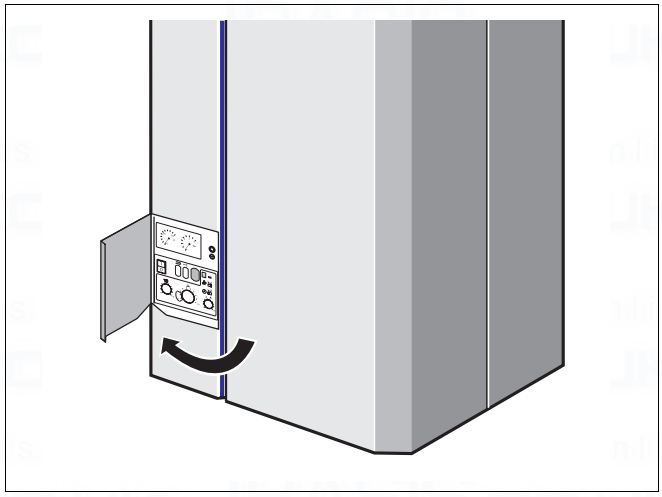

Fig. 2 600 Series 11S / 19S / 24S / 24C: Open the control panel cover

- Press the "Service" button.

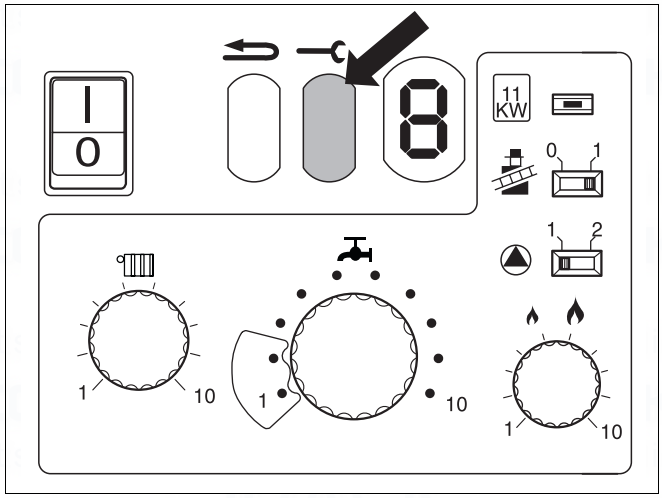

Fig. 3 "Service" button

1.2 UBA operating level 1.5

UBA operating level 1.5 (fig. 4).

Key:

Item 1: Display

Item 2: Service button

Item 3: Reset button

Item 4: Boiler flow temperature

Item 5: Hot-water temperature

Item 6: Power adjustment

Item 7: Pump overrun switch

Item 8: Chimney-sweep switch

Item 9: 11 kW jumper

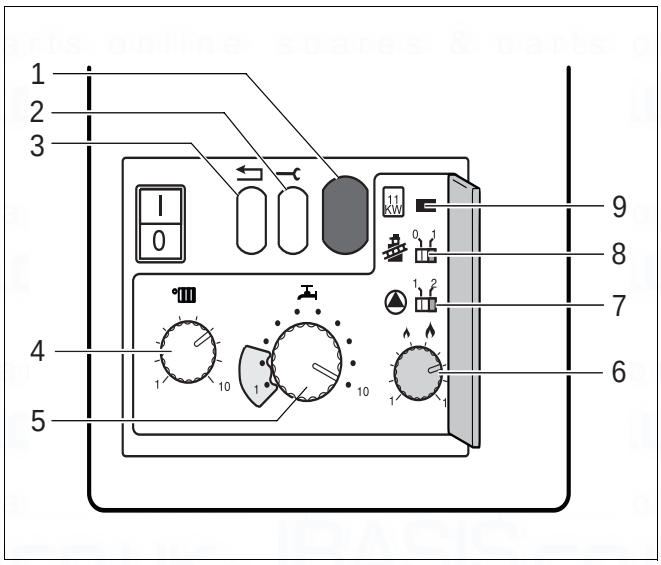

Fig. 4 UBA operating level 1.5

1.3 Service tool

The service tool allows you to determine the operating status of the boiler, check components and carry out fast fault diagnosis.

- Open the cover at the front of the boiler unit and insert the twin plug connector of the service tool into the sockets provided (fig. 5, item 1).

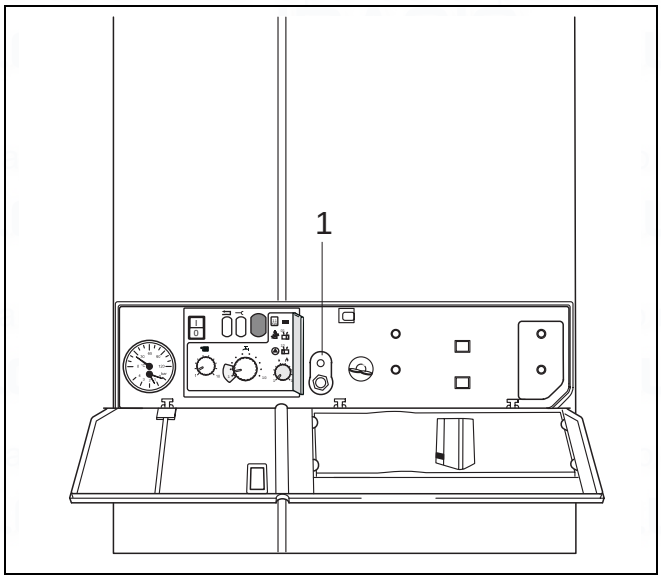

Fig. 5 Service tool connection

1.4 Operating messages

Display	Display after pressing the service button	Meaning
0		**600 Series 11S / 19S / 24S / 24C is ready for operation**
	A	Burner interval circuit, 10 min from burner start-up
	C	Waiting for the three-way valve and/or pump to switch
	H	Standby activated, 600 Series 11S / 19S / 24S / 24C ready to provide heat or hot water
	L	Initial safety period: self-testing of UBA during burner start-up
	U	Post- or pre-flushing period of fan unit
	y	Flow temperature at adjustment setting
-.		**600 Series 11S / 19S / 24S / 24C running in heating mode**
	A	“Chimney-sweep” mode, flow-temperature controller bypassed, 600 Series 11S / 19S / 24S / 24C heating to previously-entered flow temperature
	H	Normal heating mode
	y	Service mode
=.		**600 Series 11S / 19S / 24S / 24C running in hot-water mode**
	H	Normal hot water mode
r		Reset

Table 1 Displayed UBA operating messages

1.5 Fault messages

Display	Display after pressing the service button	Meaning	Trouble-shooting flow diagram
2		**Water flow**	
	C	Safety sensor exceeds 100 °C	page 10
	P	Excessive temperature increase at safety sensor	page 11
3		**Air volume flow**	
	C	Bad plug-in connection at cable loom, or damaged wiring	page 12
4		**Temperatures**	
	A	Feed sensor above 100 °C	page 13
	C	F2 fuse malfunction, or exhaust-gas sensor tripped	page 15
	F	Safety sensor exceeds 100 °C	page 17
	H	Dripping tap	page 18
	L	Short circuit in safety sensor	page 19
	P	Safety sensor, loose contact or defective	page 20
	U	Short circuit in feed sensor	page 21
	y	Feed sensor, loose contact or defective	page 22
5		**Communication**	
	C	600 series has switched off after disconnection of diagnosis plug	page 23
6		**Flame monitoring**	
	A	F1 fuse defective, or no ionisation message after ignition	page 24
	C	Ionisation message, but no flame	page 28
	H	Flame dies out after gas valve is opened	page 29
	L	Flame goes out during warm-up phase	page 30

Display	Display after pressing the service button	Meaning	Trouble-shooting flow diagram
7		**Mains voltage**	
	A	Voltage in UBA too low or too high	page 31
	C	Mains voltage interrupted following a fault warning message	page 32
	F	F3 fuse defect, or UBA system error	page 33
	H	Voltage peaks in UBA	page 34
	L	UBA timer error	page 35
8		**General fault/gas-pressure**	
	y	External switching contact, e.g. temperature monitor for floor heating, has been tripped	page 36
9		**System error**	
	A	System error	page 37
	C	Incorrect cable connection at KIM, or KIM defective	page 38
	F, H, P	System error (UBA defective)	page 39
	L	Wiring to gas-burner assembly incorrect, or loose wiring connections in UBA	page 40
	U	KIM defective	page 41
E		**UBA system fault**	
	Any indication, except P	UBA system fault	
	P	Non-compatible UBA fitted	page 42

Table 2 Displayed UBA fault warning messages

2 Faults that the UBA does not display

Hot-water mode

Although the UBA is apparently ready for use, situations may arise where a hot-water tap is opened and no hot water flows out, or flows out for only a short period.

Troubleshooting flow diagram:
page 43/44.

Heating mode

Although the UBA is apparently ready for use, and the room temperature has not yet reached the preset level, the 600 Series 11S / 19S / 24S / 24C wall-mounted condensing gas boiler fails to go into heating mode.

Troubleshooting flow diagram:
page 45.

3 Troubleshooting

The following flow diagrams are provided for the purpose of systematic troubleshooting.

Take the opportunity, while carrying out fault diagnosis, to check that all that plugs and wiring terminals on the UBA are connected correctly.

WARNING
Switch off the 600 Series 11S / 19S / 24S / 24C BEFORE checking the connections.

Each time a fault has been rectified, push the “reset” button "↩" to unblock the UBA and return it to standby mode.

NOTE
The system **cannot** be reset by disconnecting at the master switch.

Certain troubleshooting tasks must be carried out with the 600 Series 11S / 19S / 24S / 24C in heating mode.
When doing so, the chimney-sweep switch should be set to "**1**" (fig. 6).

Remember to return the chimney-sweep switch to “**0**” once work is complete.

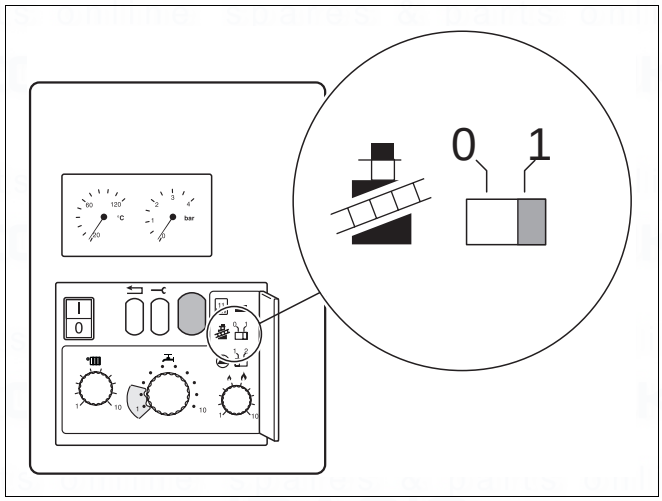

Fig. 6 Chimney sweeper switch on UBA

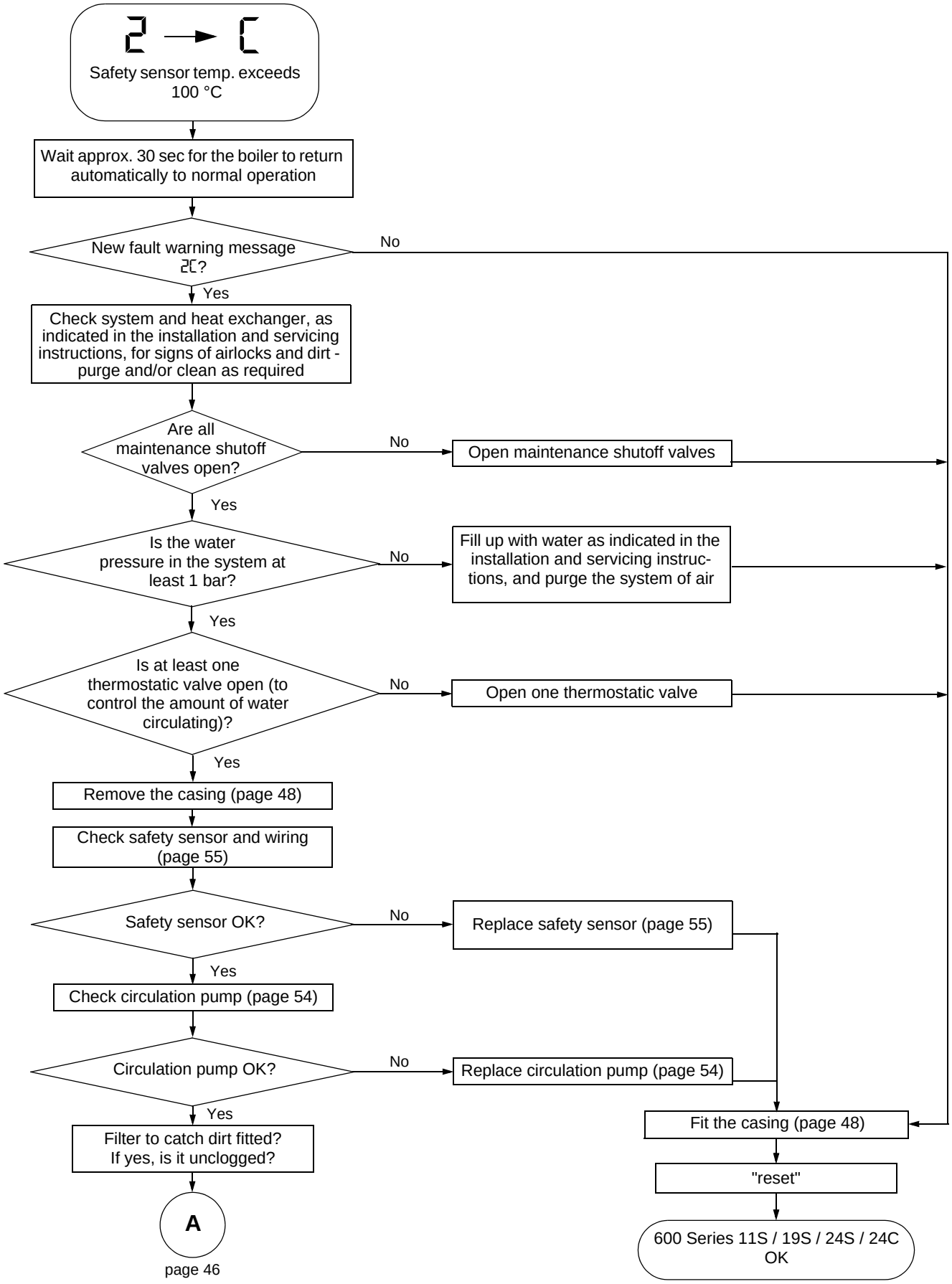

Fig. 7 Fault warning message 2C: Safety sensor temp. exceeds 100 °C

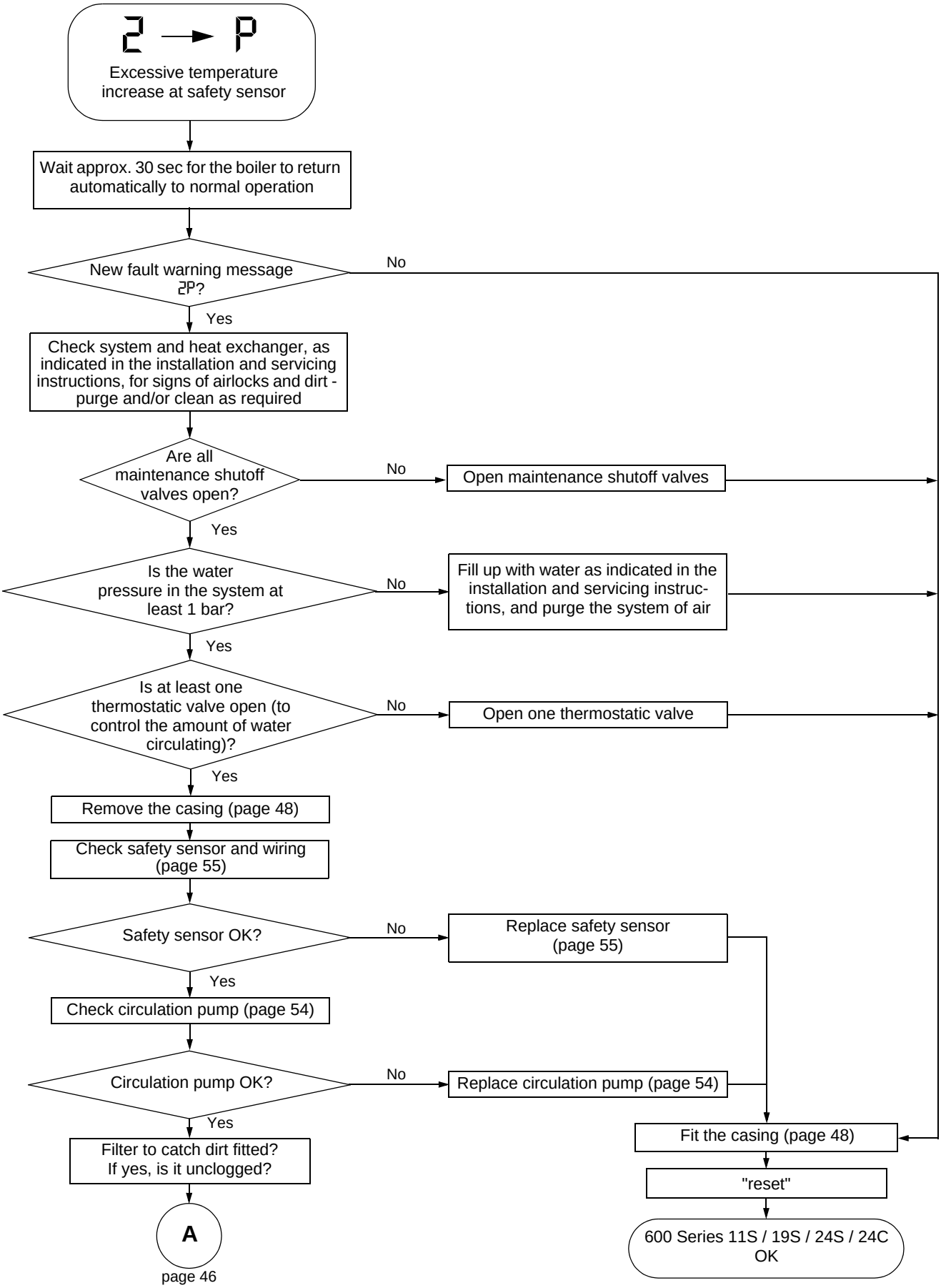

Fig. 8 Fault warning message 2P: Excessive temperature increase at safety sensor

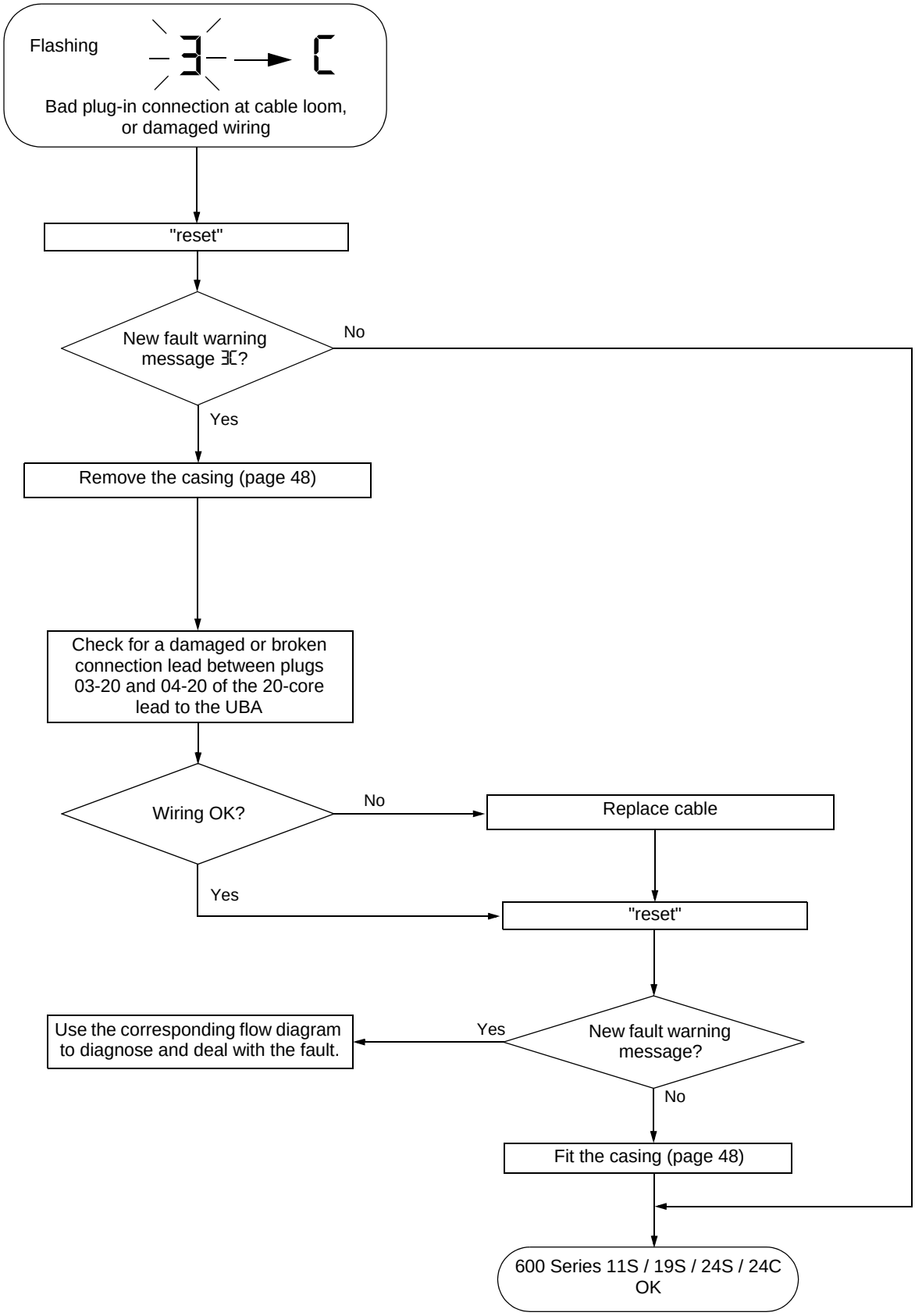

Fig. 9 Fault warning message 3C: Bad plug-in connection at cable loom, or damaged wiring

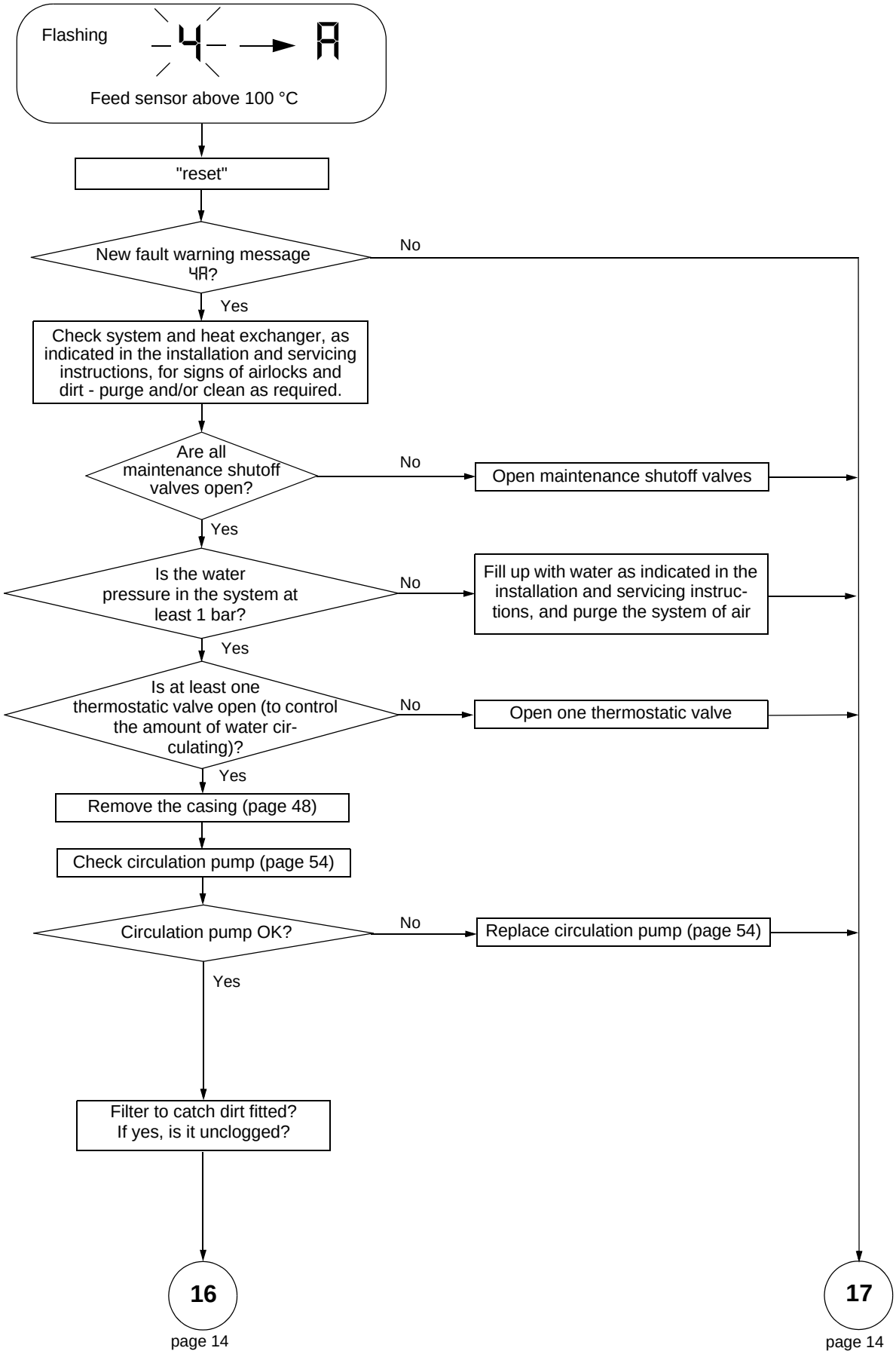

Fig. 10 Fault warning message 4A: Feed sensor above 100 °C

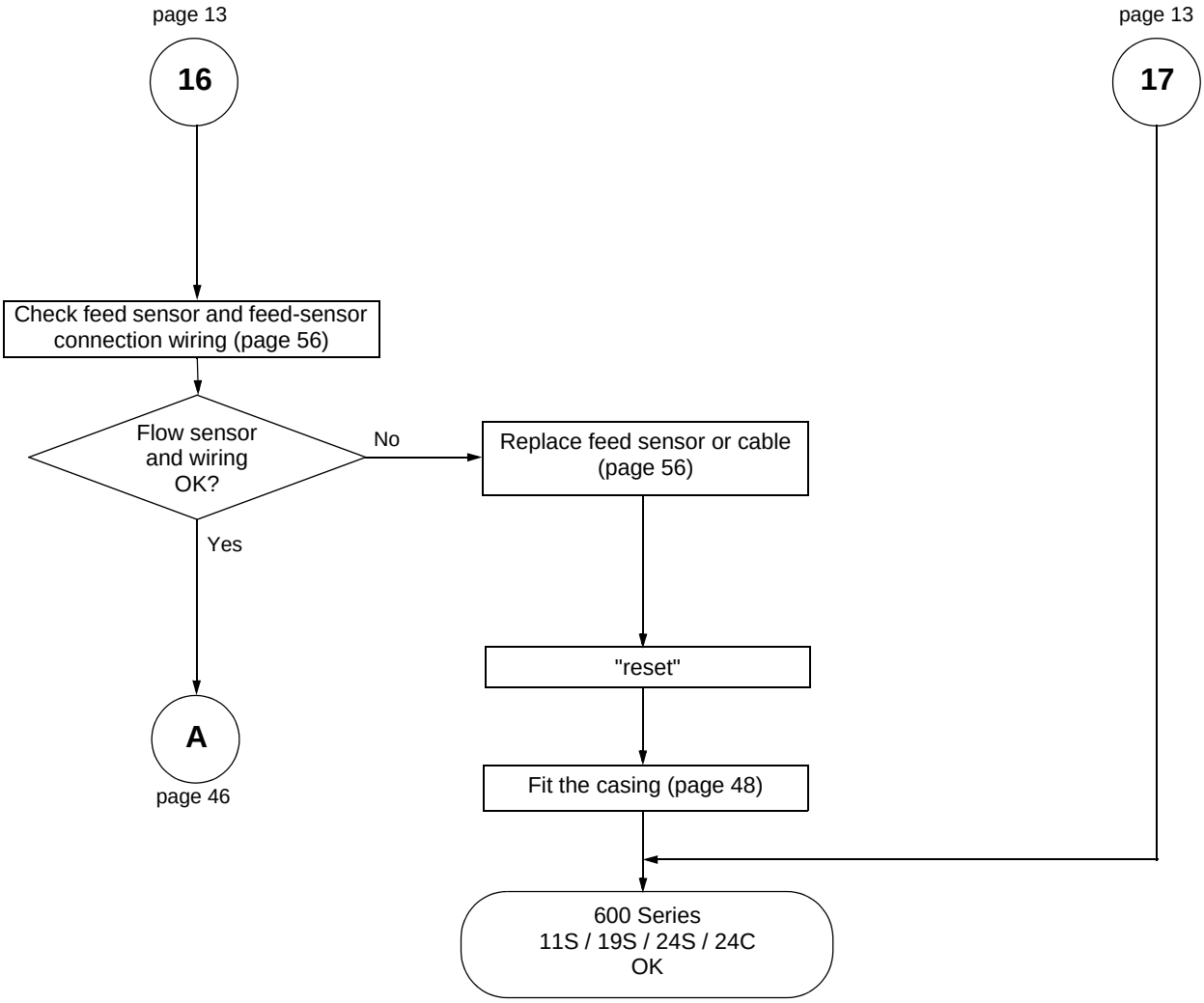

Fig. 11 Continuation of fault warning message 4A: Feed sensor above 100 °C

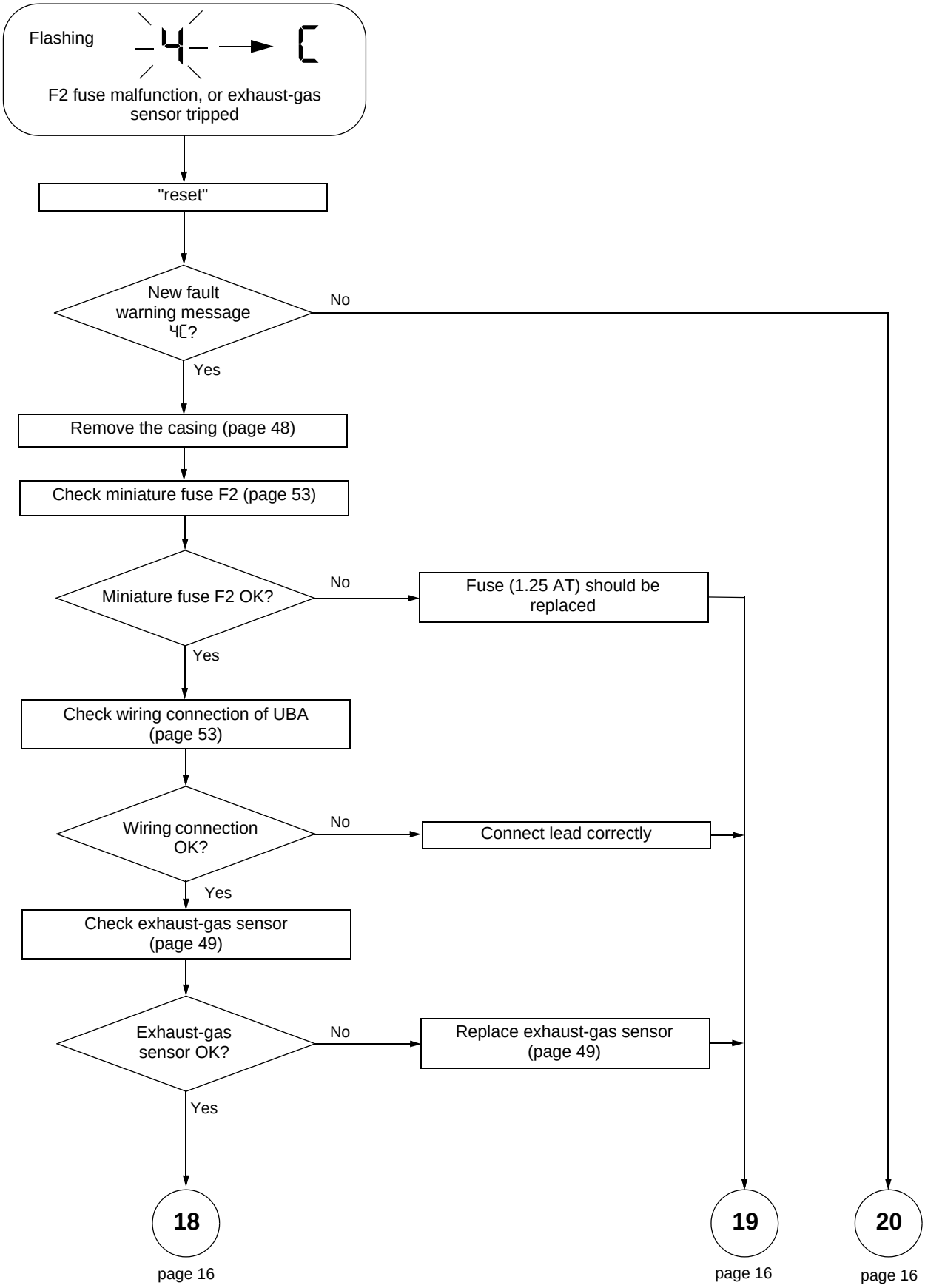

Fig. 12 Fault warning message 4C: F2 fuse malfunction, or exhaust-gas sensor tripped

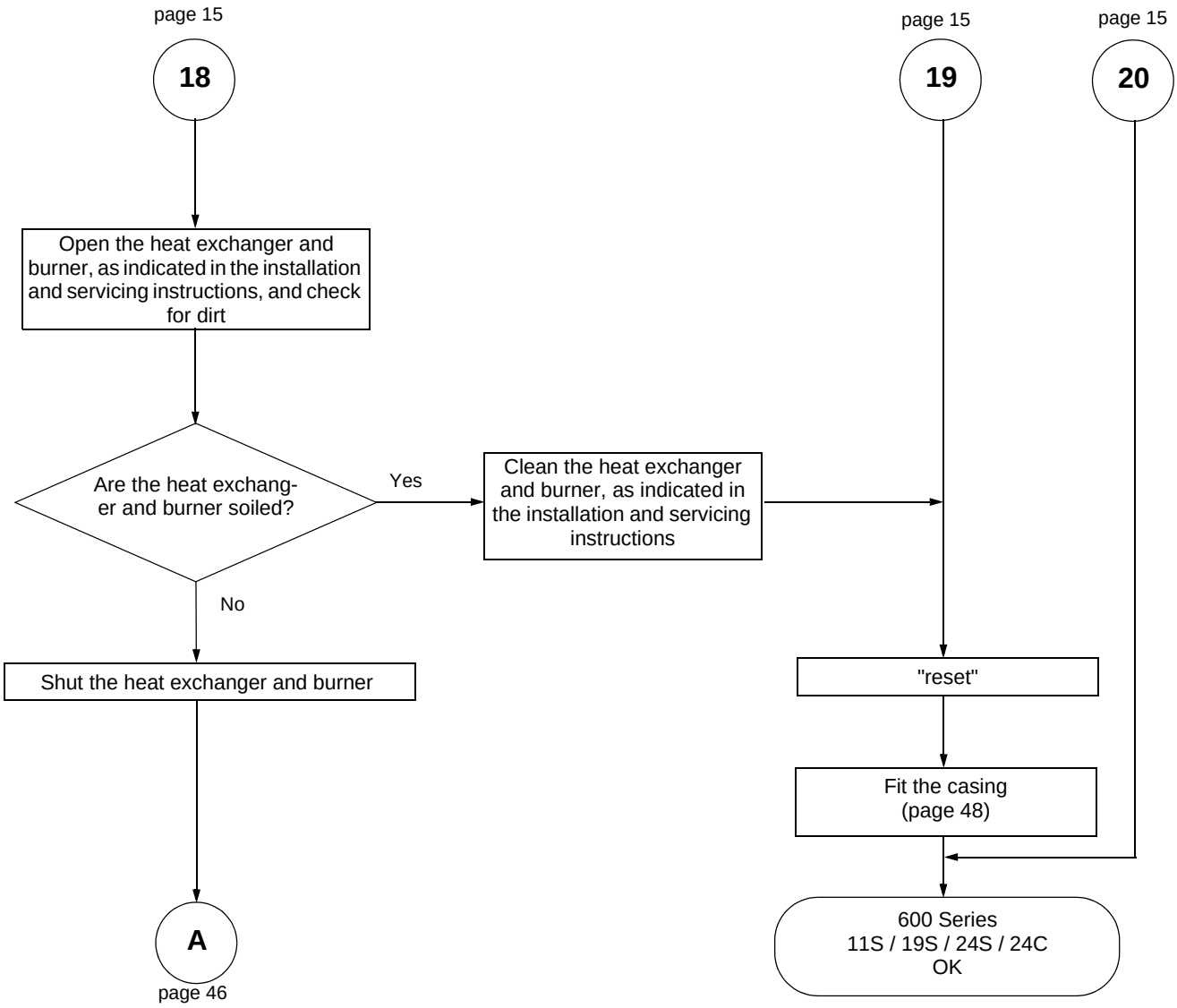

Fig. 13 Continuation of fault warning message 4C: F2 fuse malfunction, or exhaust-gas sensor tripped

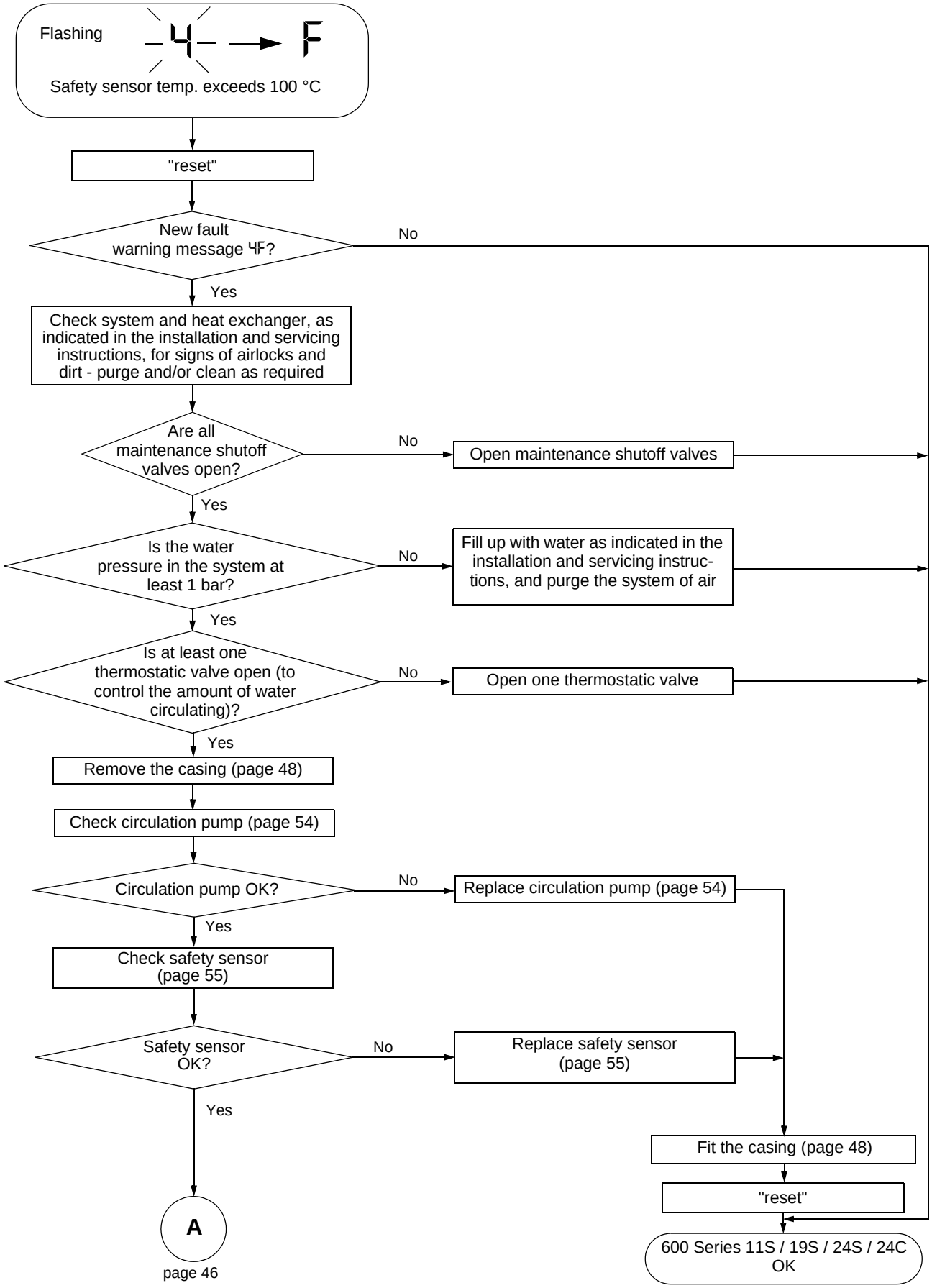

Fig. 14 Fault warning message 4F: Safety sensor temp. exceeds 100 °C

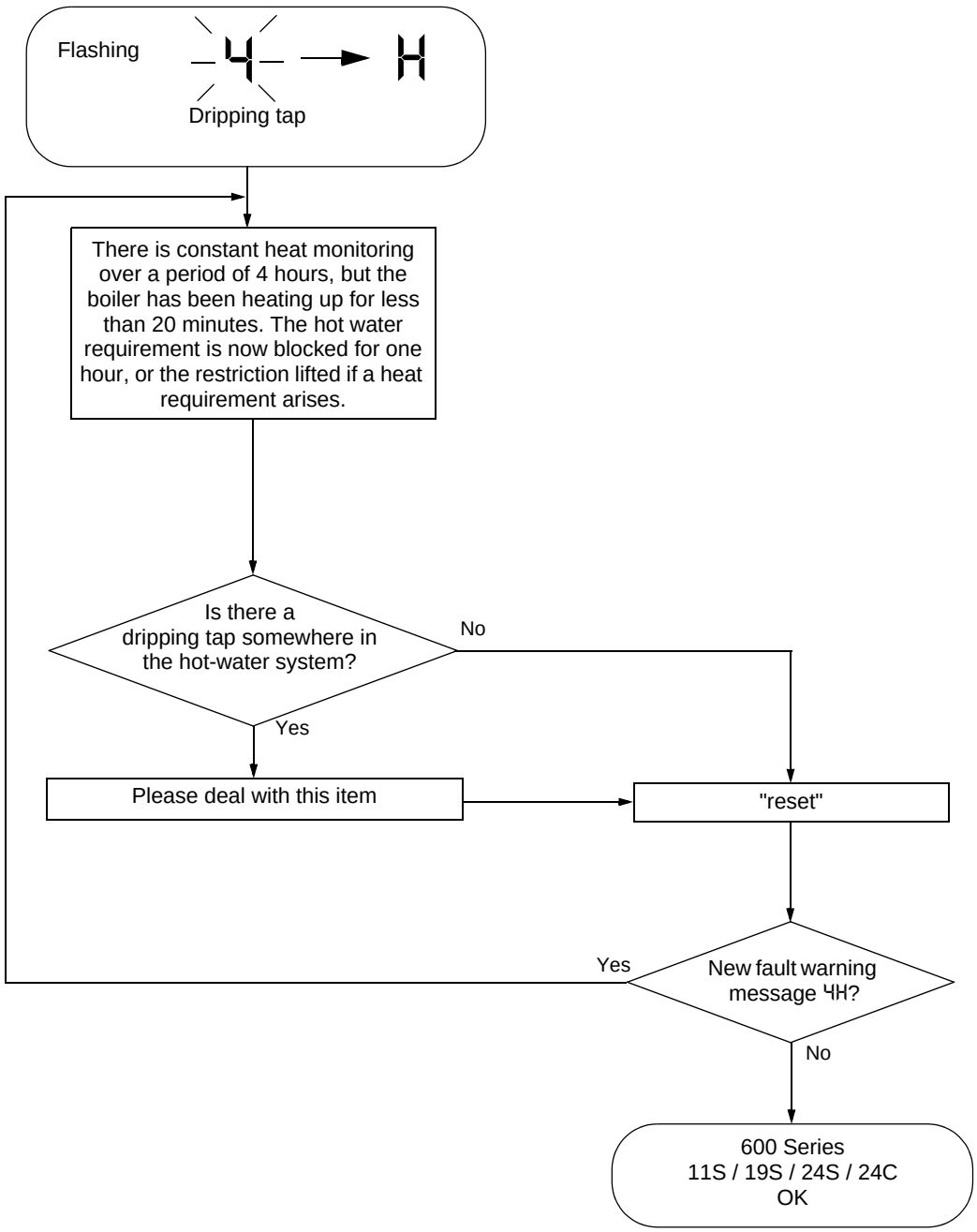

Fig. 15 Fault warning message 4H: Dripping tap

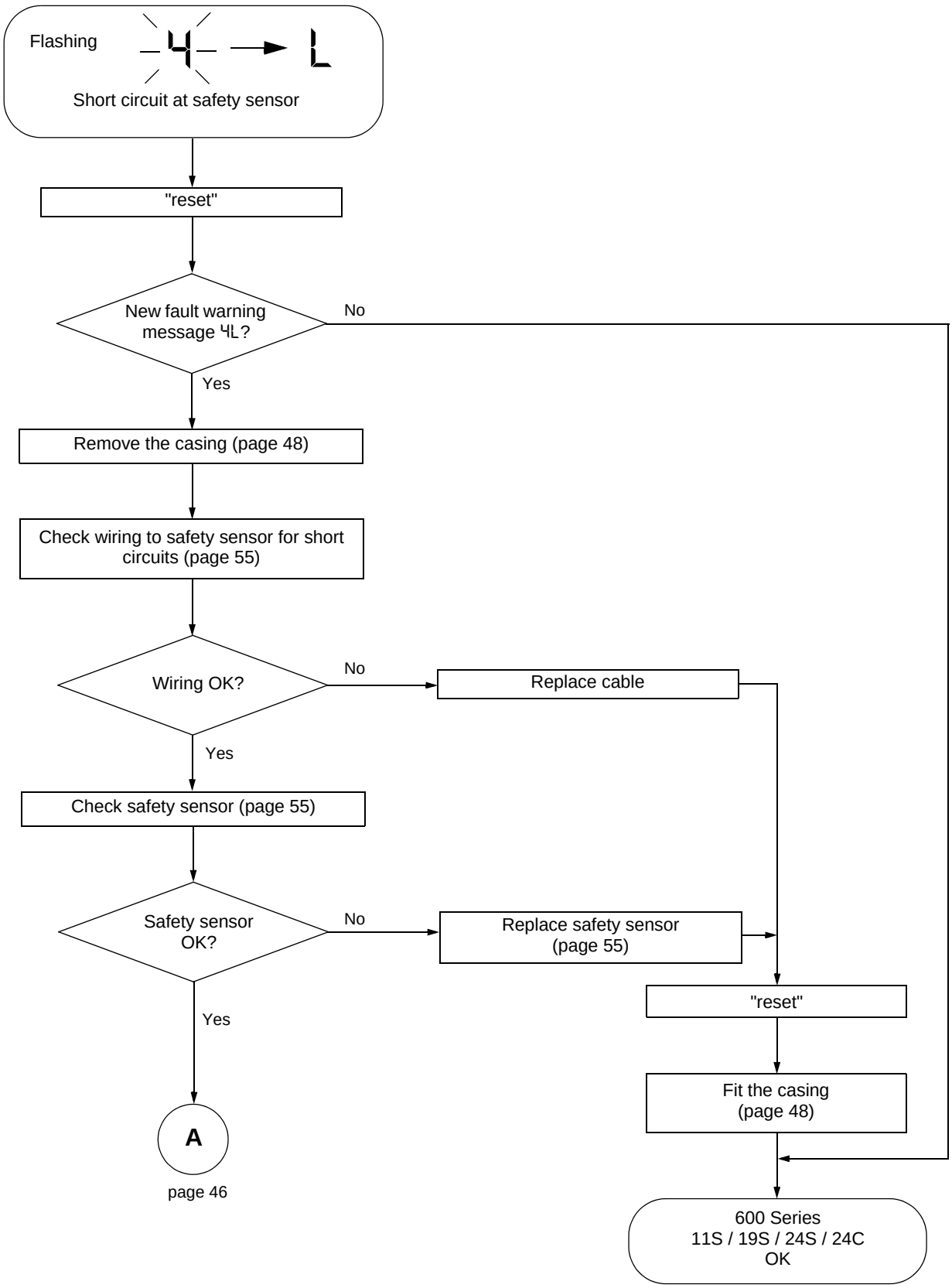

Fig. 16 Fault warning message 4L: Short circuit in safety sensor

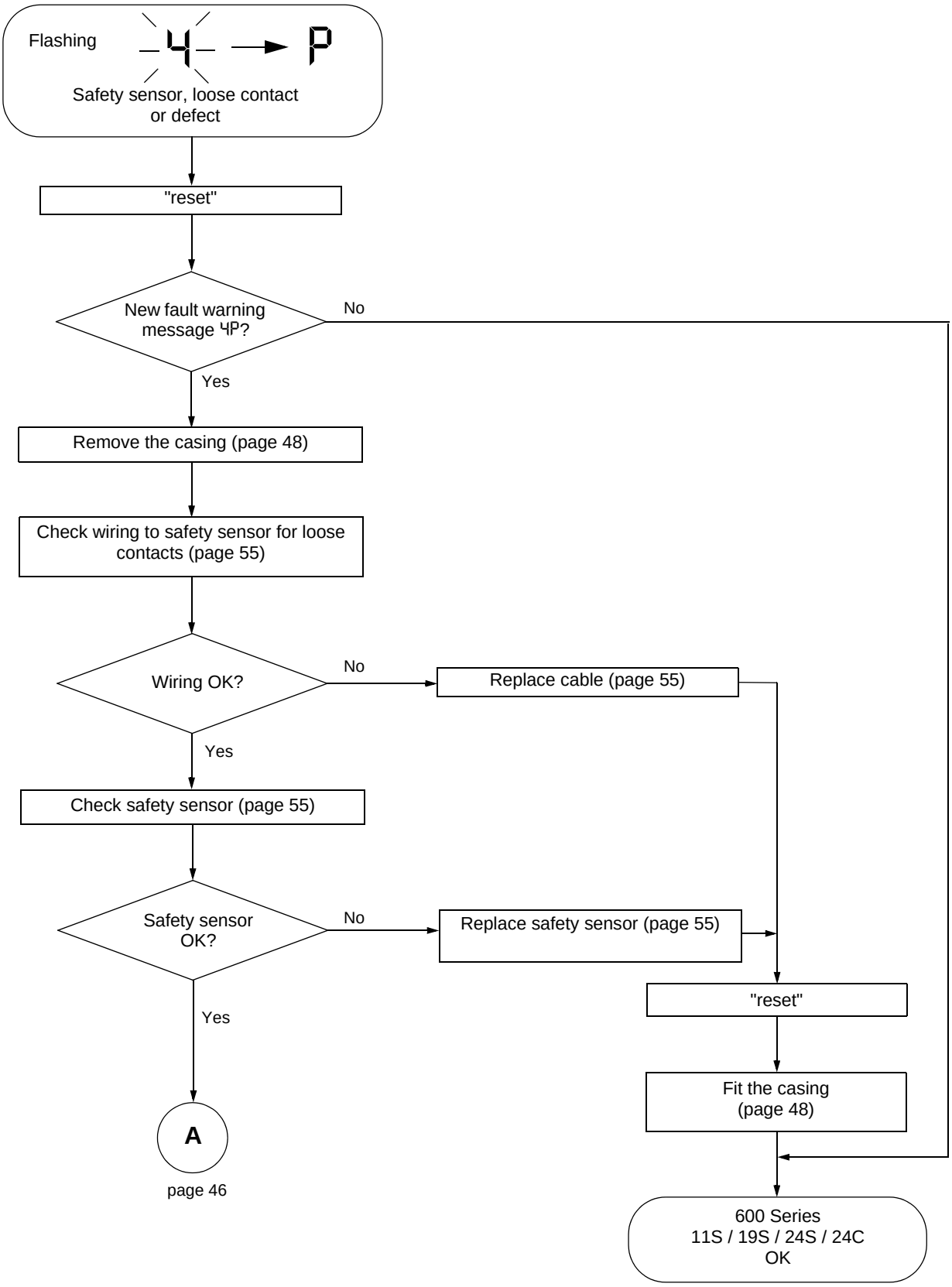

Fig. 17 Fault warning message 4P: Safety sensor, loose contact or defect

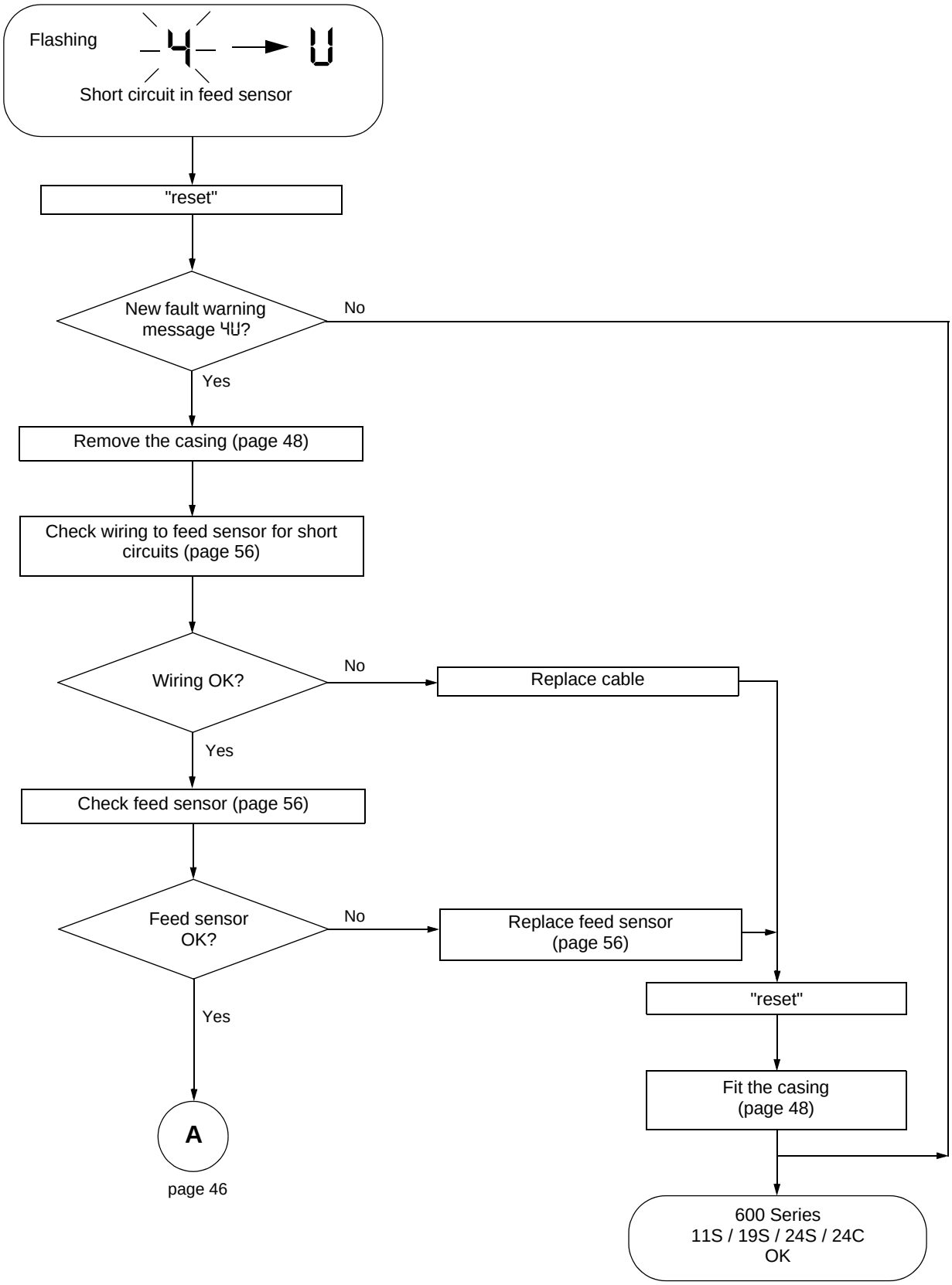

Fig. 18 Fault warning message 4U: Short circuit in feed sensor

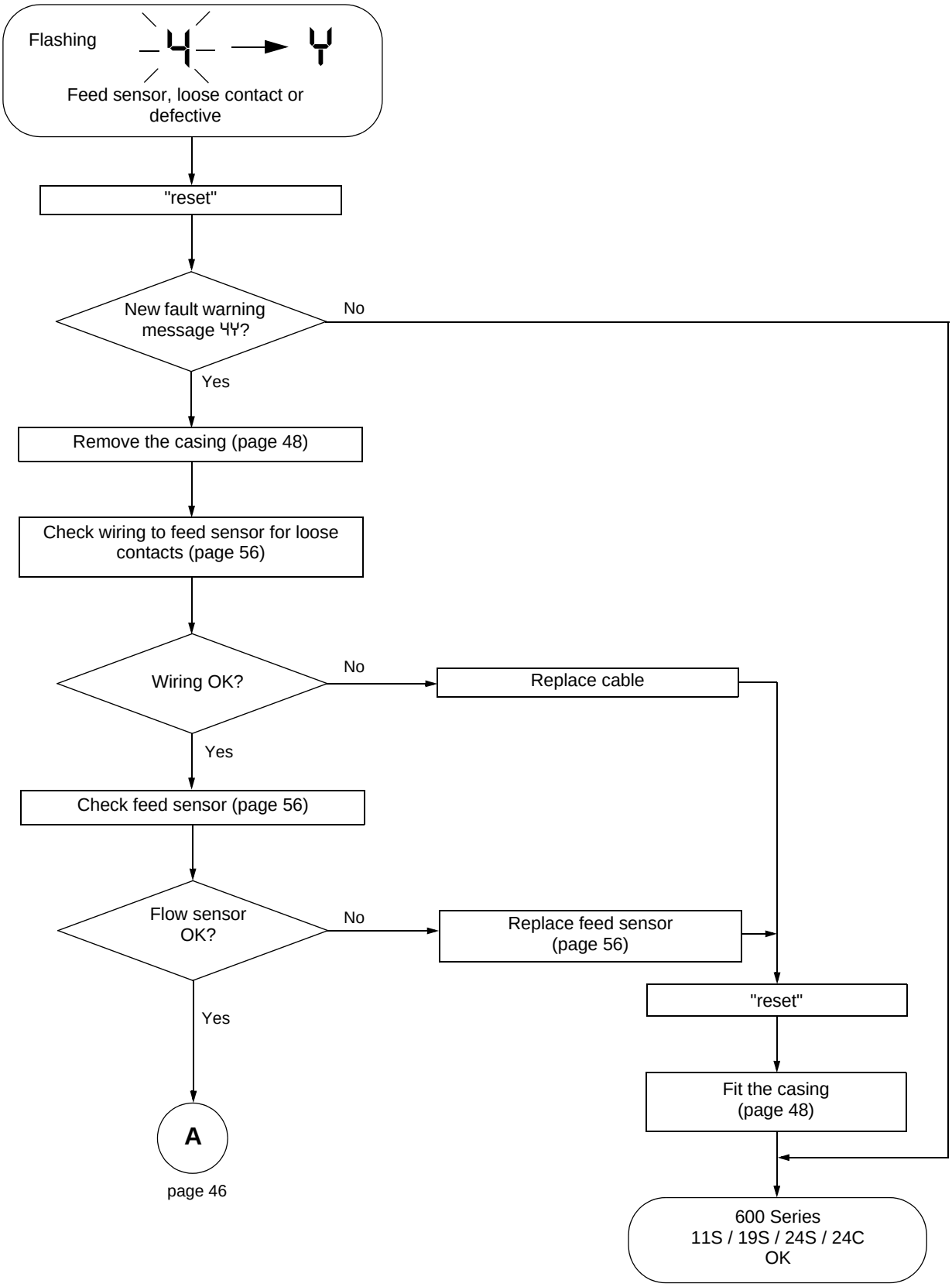

Fig. 19 Fault warning message 4Y: Feed sensor, loose contact or defective

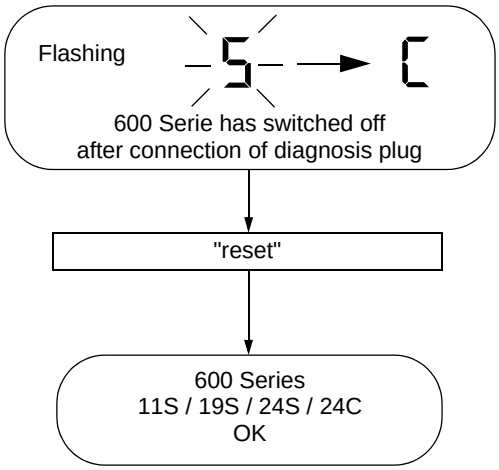

Fig. 20 Fault warning message 5C: 600 Series has switched off after disconnection of diagnosis plug

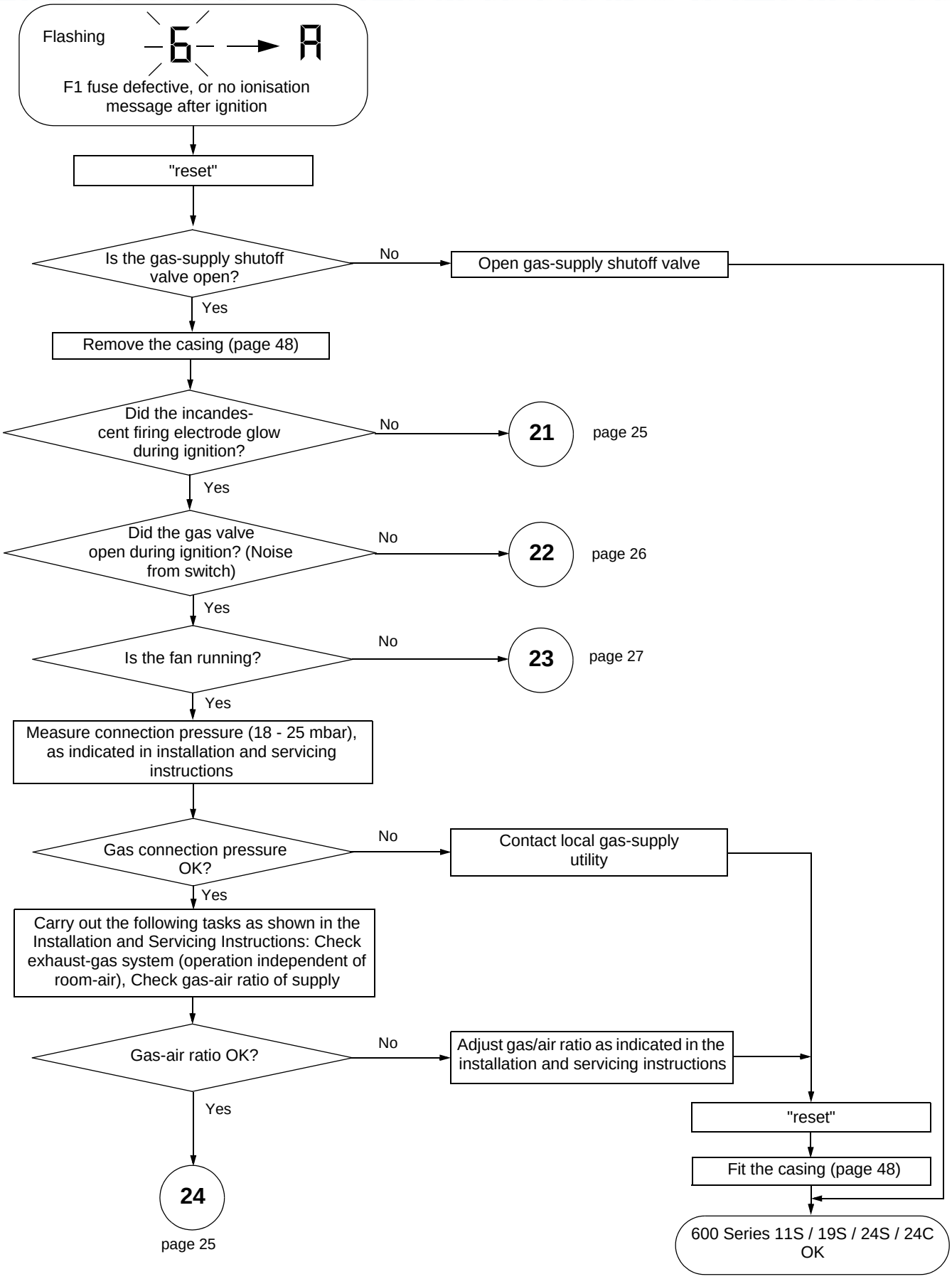

Fig. 21 Fault warning message 6A: F1 fuse defective, or no ionisation message after ignition

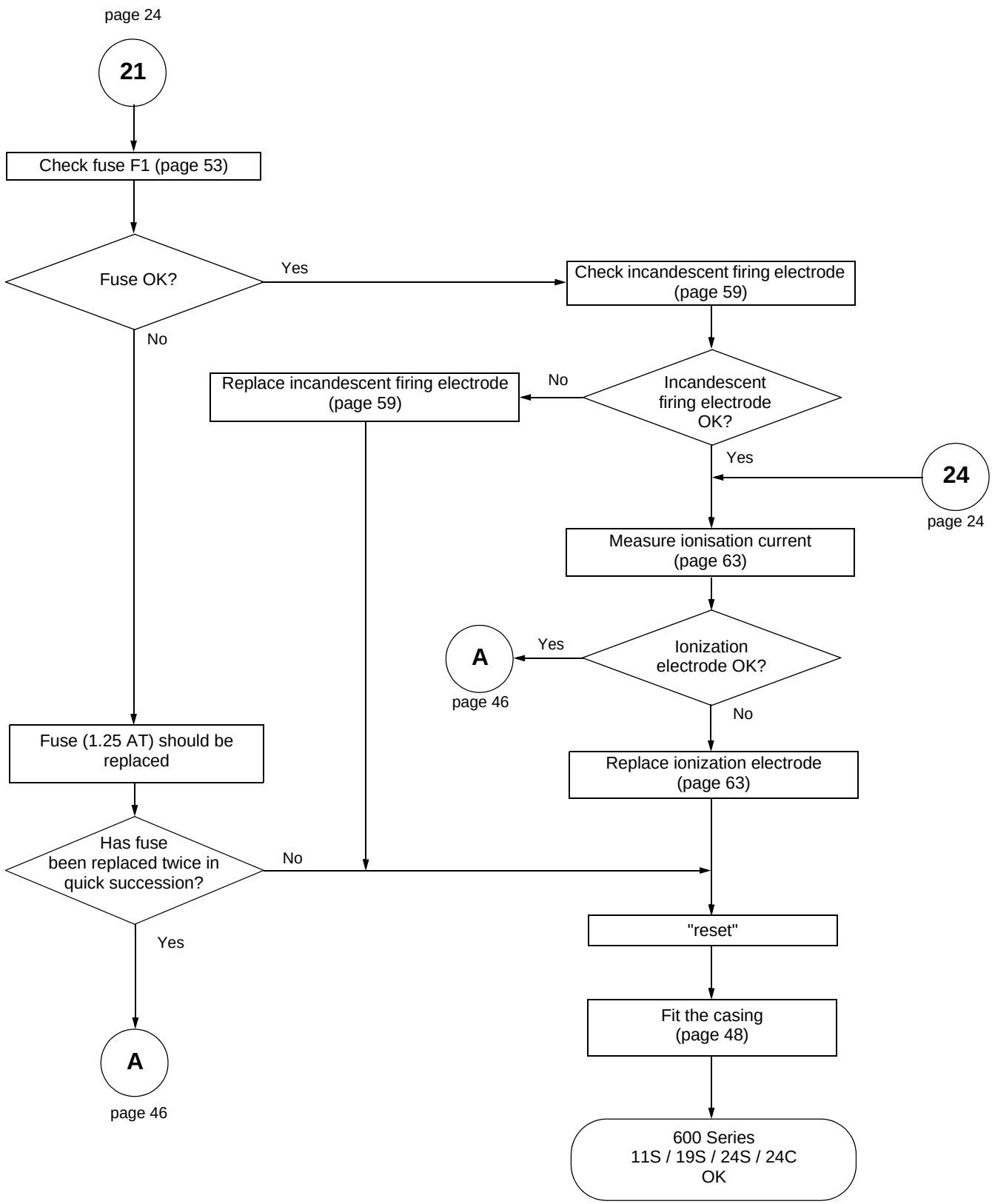

Fig. 22 Continuation of fault warning message 6A: F1 fuse defective, or no ionisation message after ignition

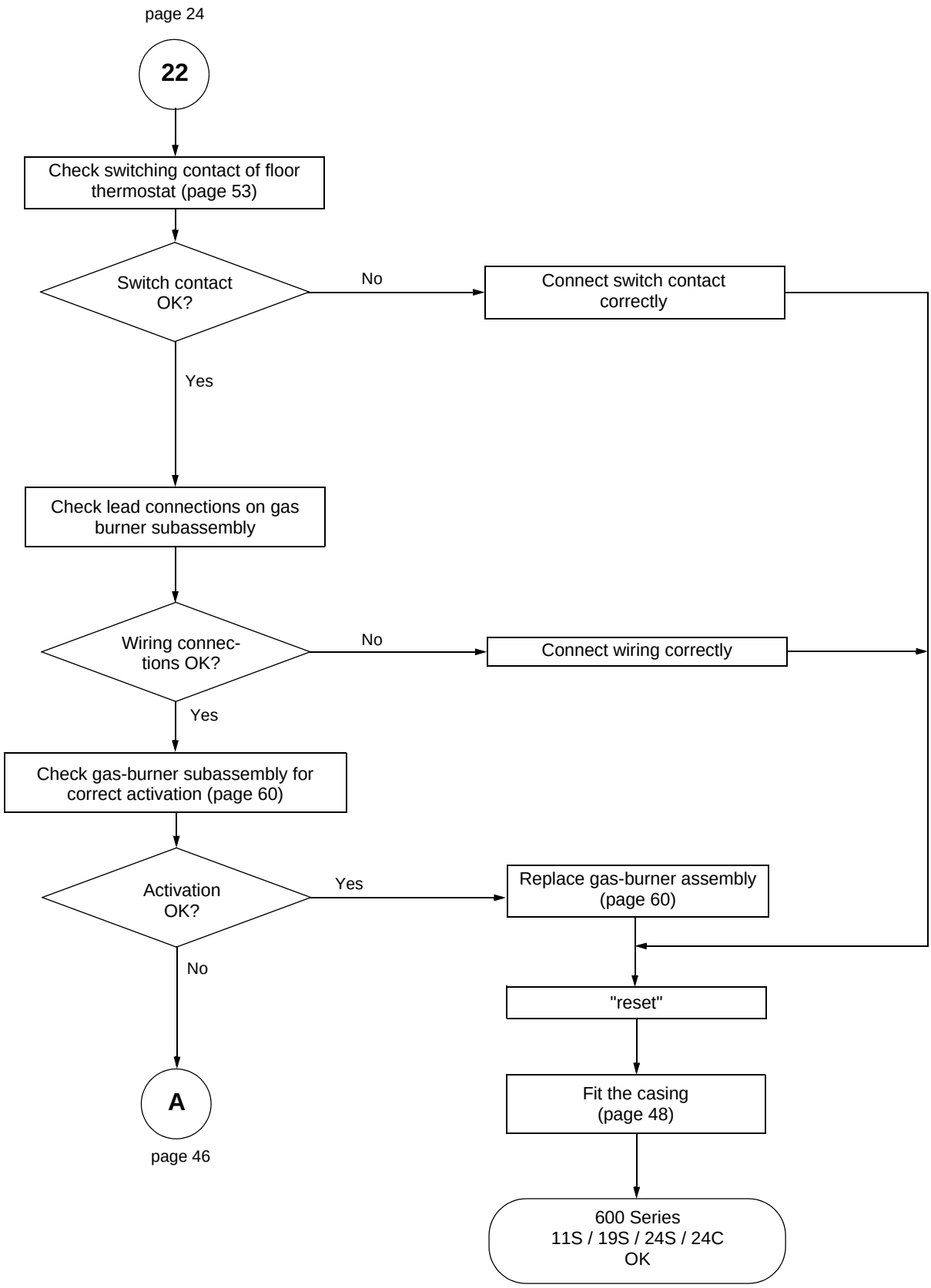

Fig. 23 Continuation of fault warning message 6A: F1 fuse defective, or no ionisation message after ignition

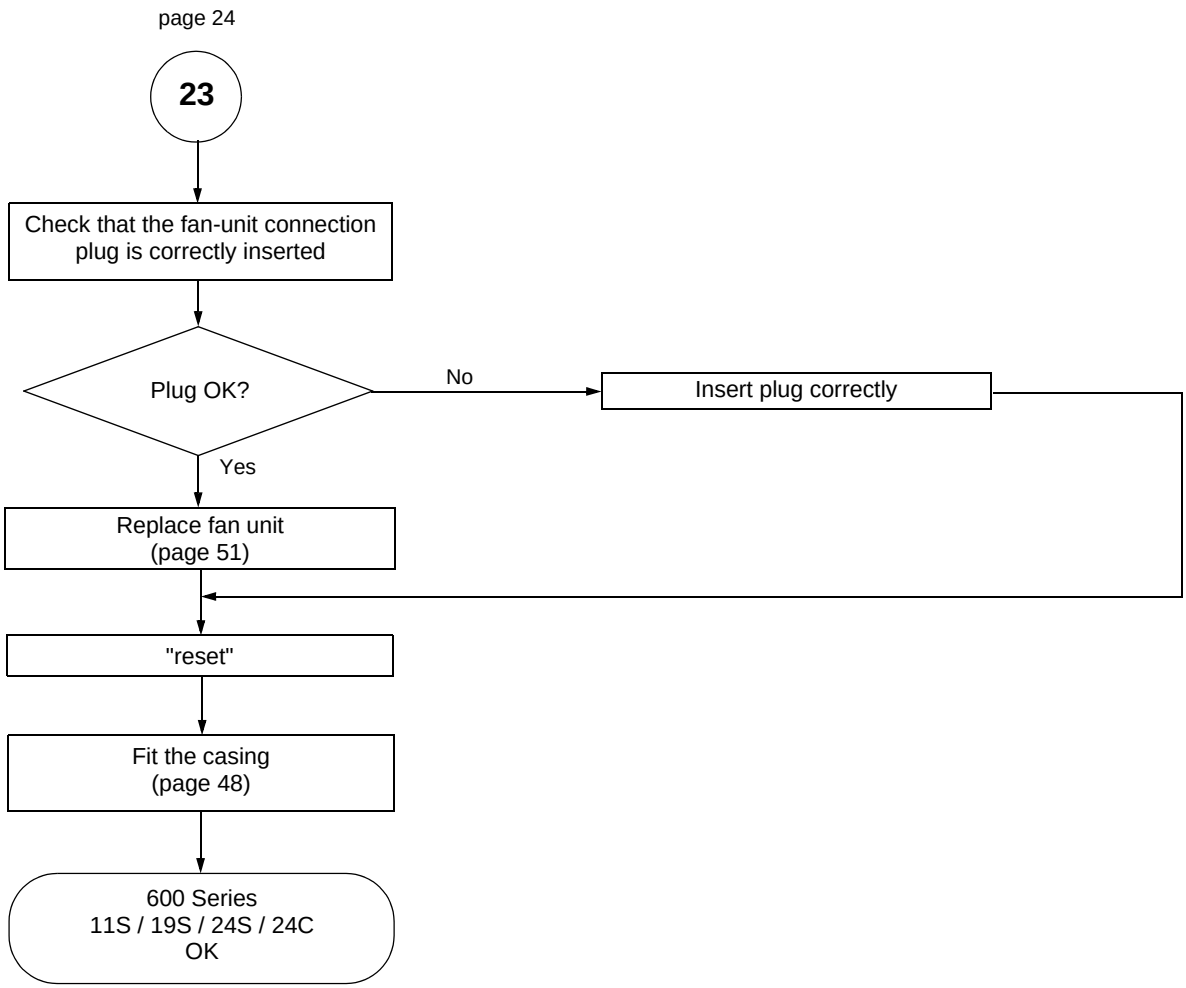

Fig. 24 Continuation of fault warning message 6A: F1 fuse defective, or no ionisation message after ignition

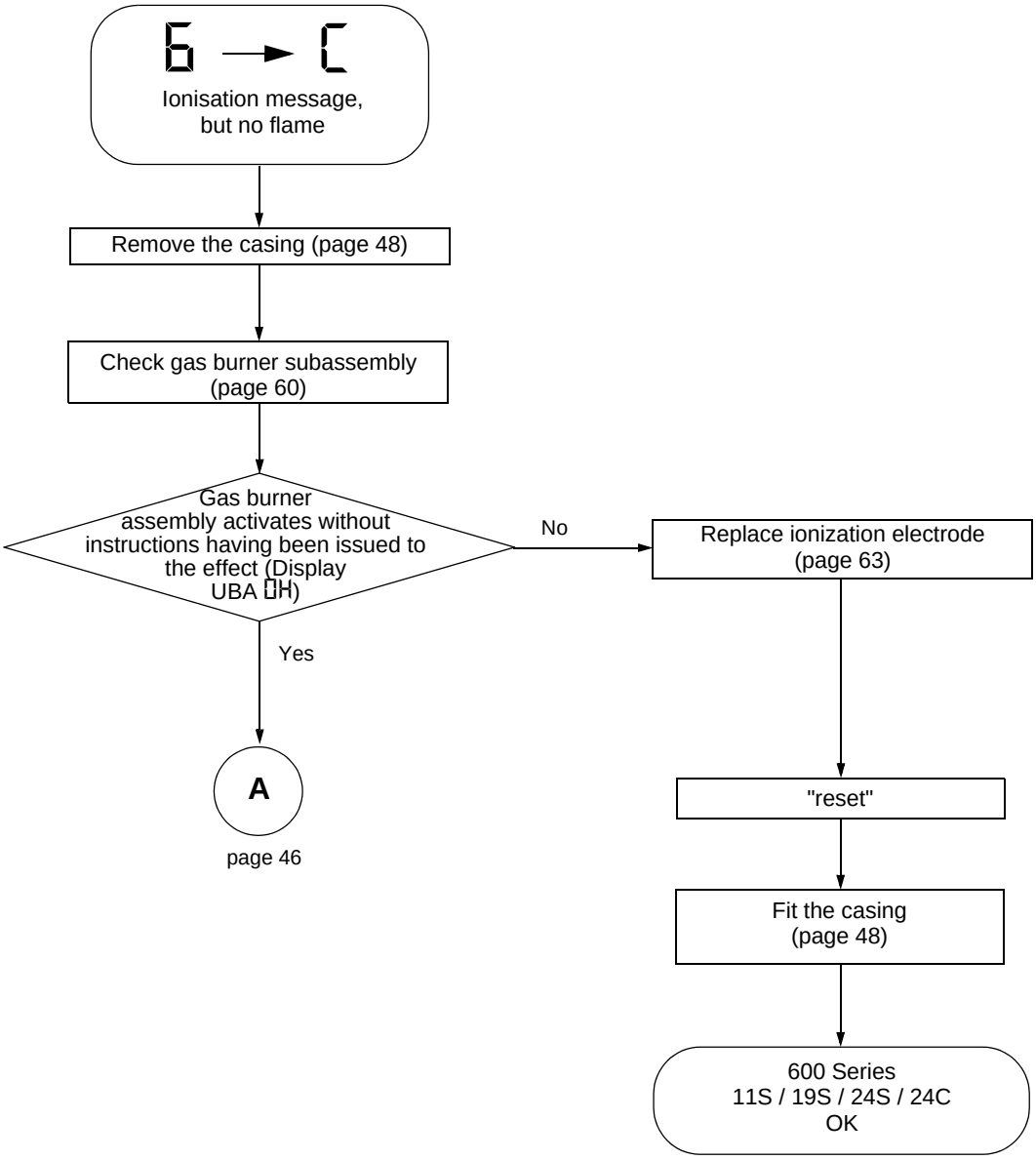

Fig. 25 Fault warning message 6C: Ionisation message, but no flame

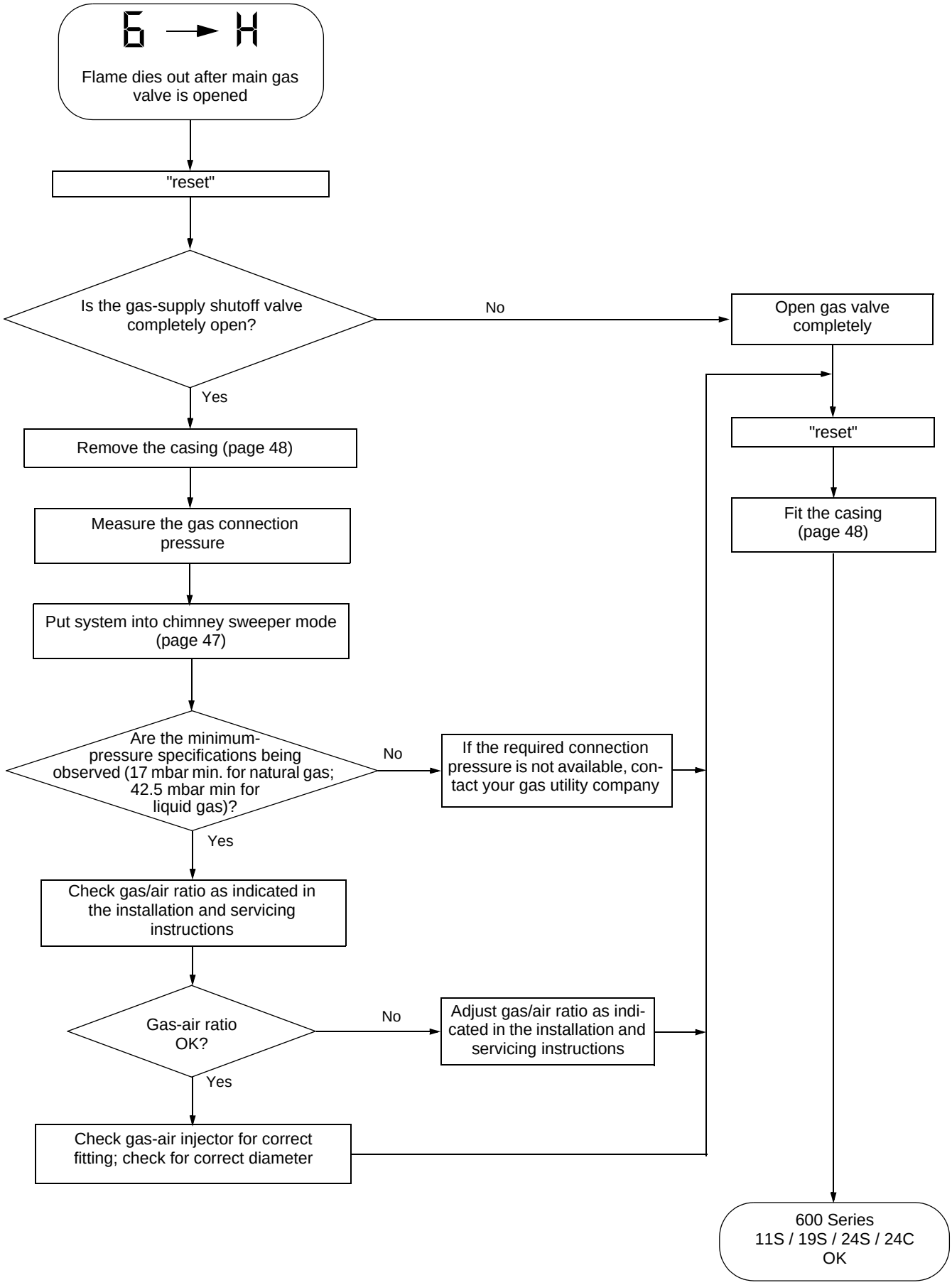

Fig. 26 Fault warning message 6H: Flame dies out after main gas valve is opened

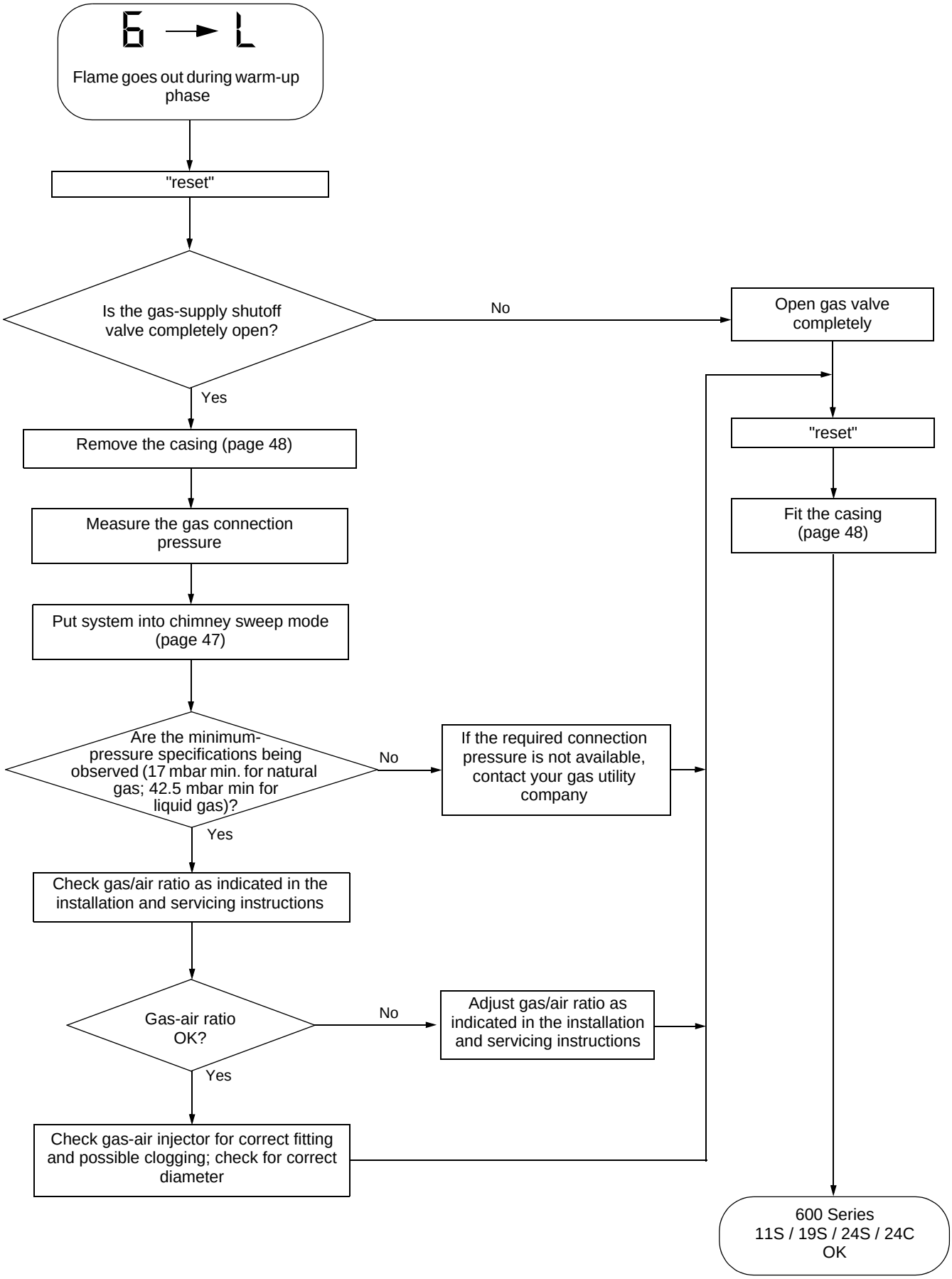

Fig. 27 Fault warning message 6L: Flame goes out during warm-up phase

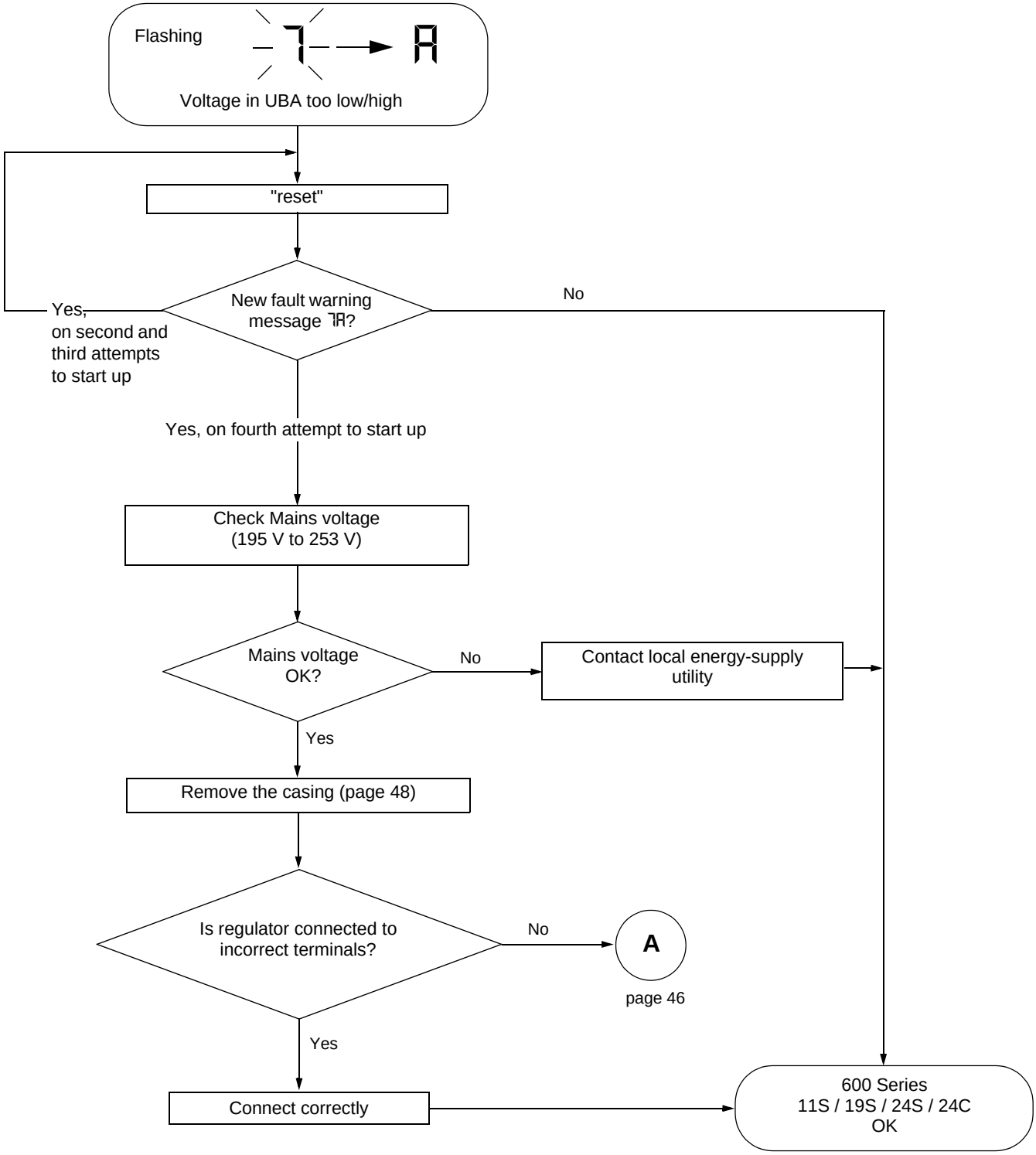

Fig. 28 Fault warning message 7A: Voltage in UBA too low or too high

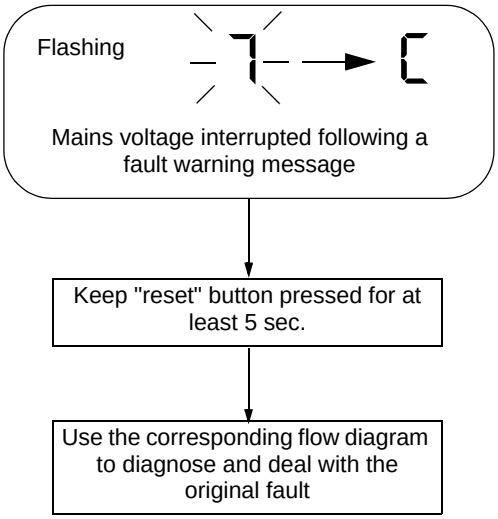

Fig. 29 Fault warning message 7C: Mains voltage interrupted following a fault warning message

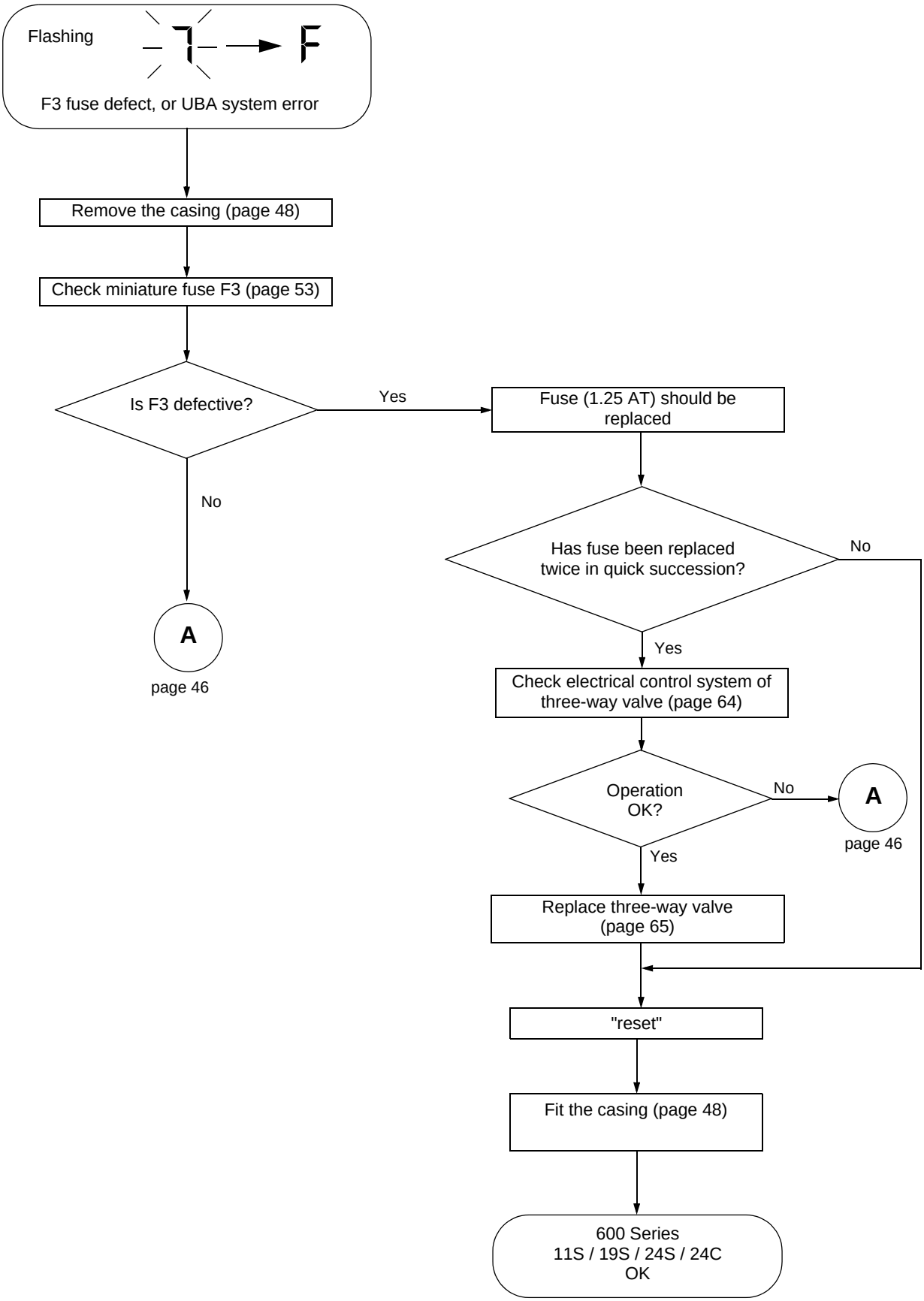

Fig. 30 Fault warning message: 7F: F3 fuse defect, or UBA system error

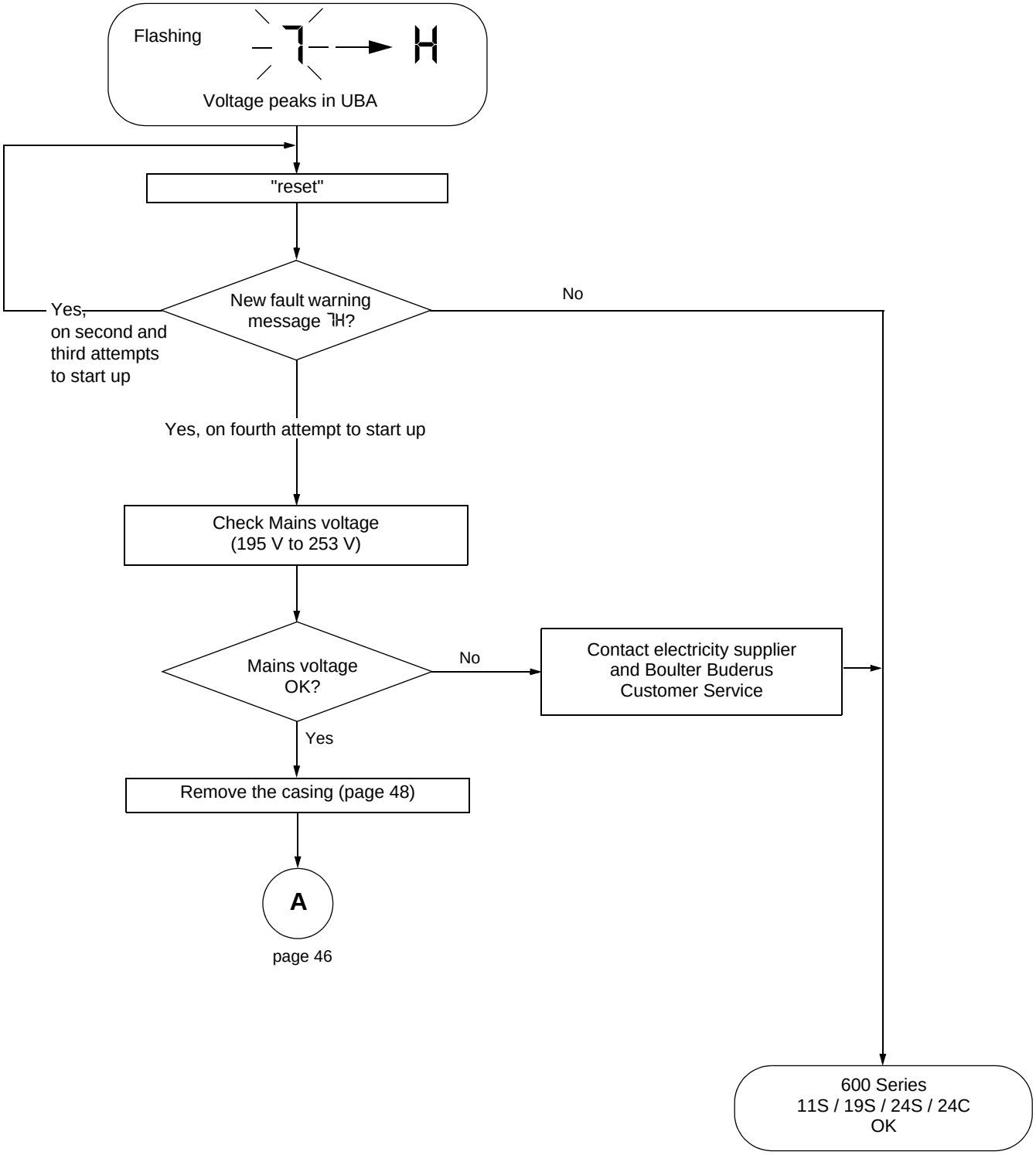

Fig. 31 Fault warning message 7H: Voltage peaks in UBA

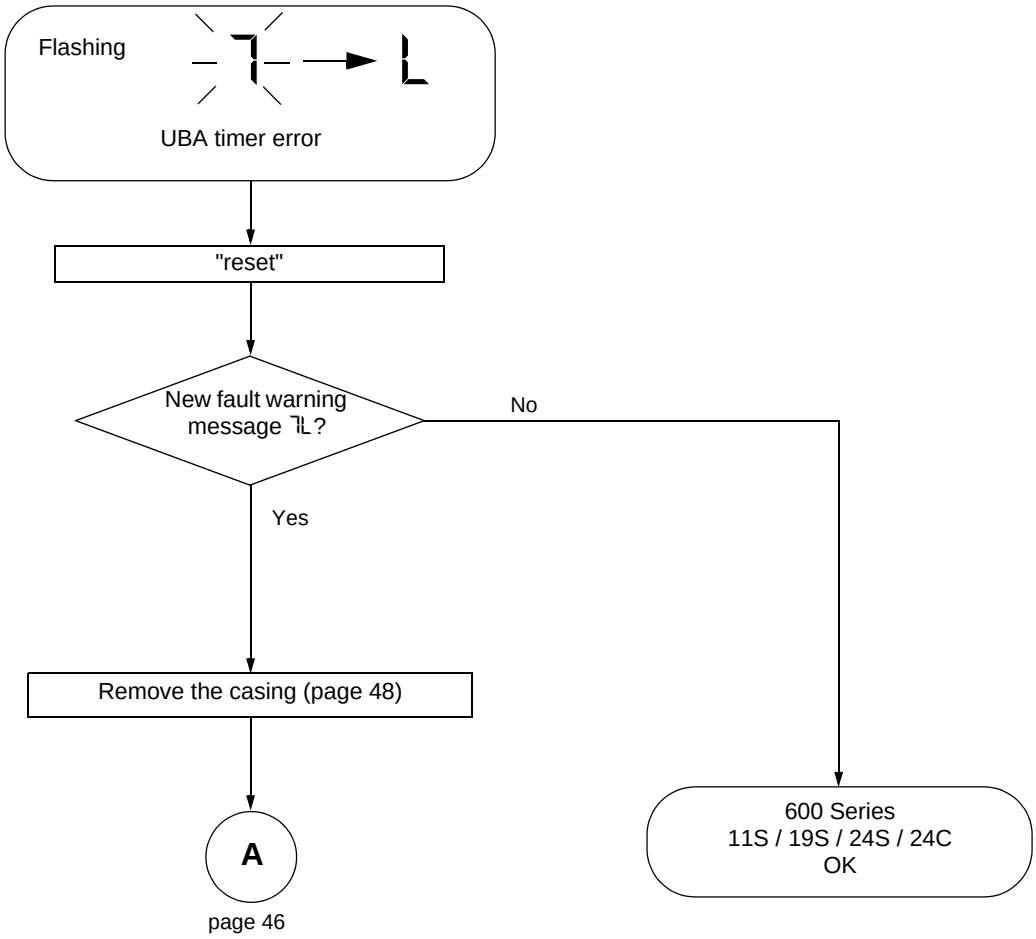

Fig. 32 Fault warning message 7L: UBA timer error

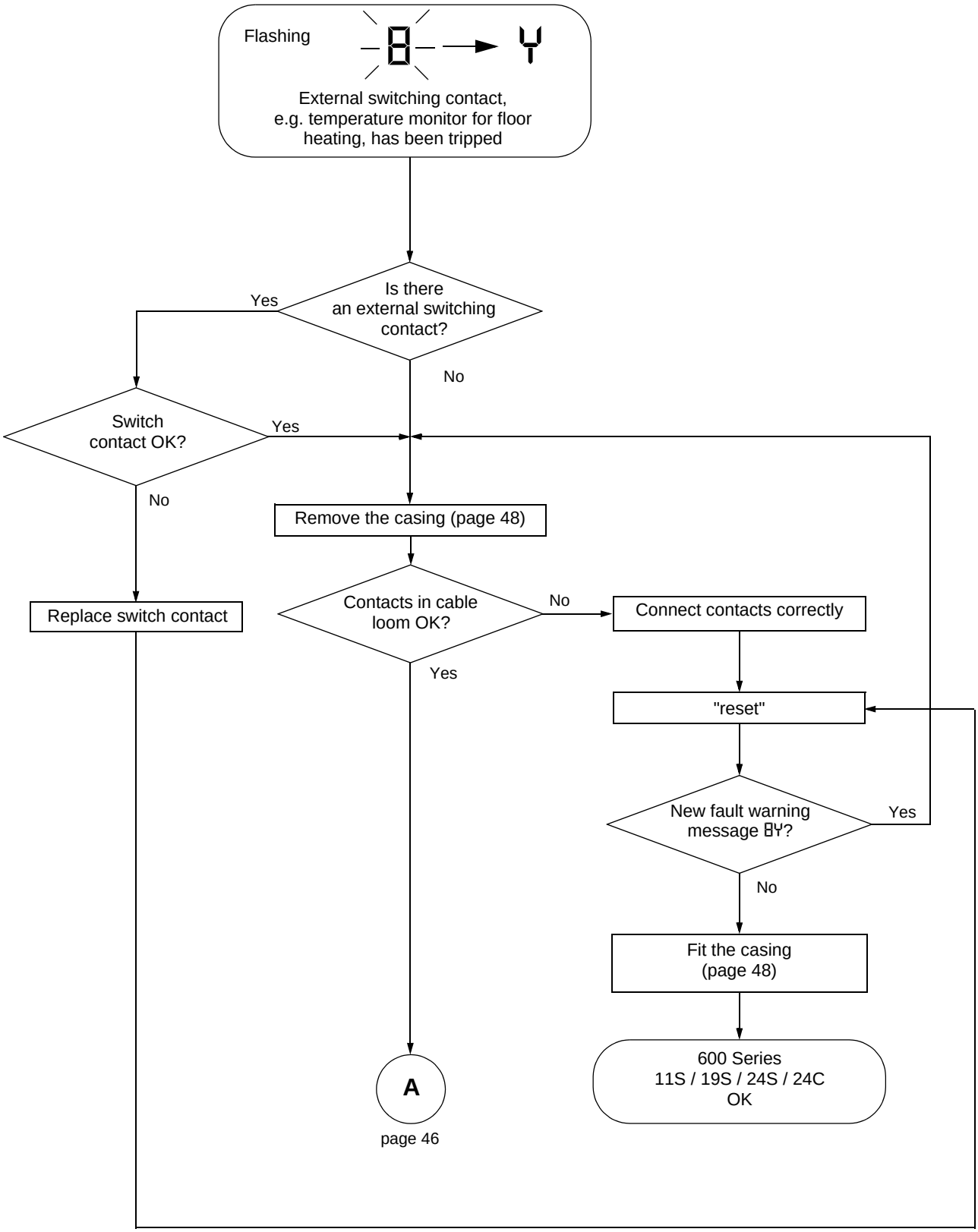

Fig. 33 Fault warning message 8Y: External switching contact, e.g. temperature monitor for floor heating, has been tripped

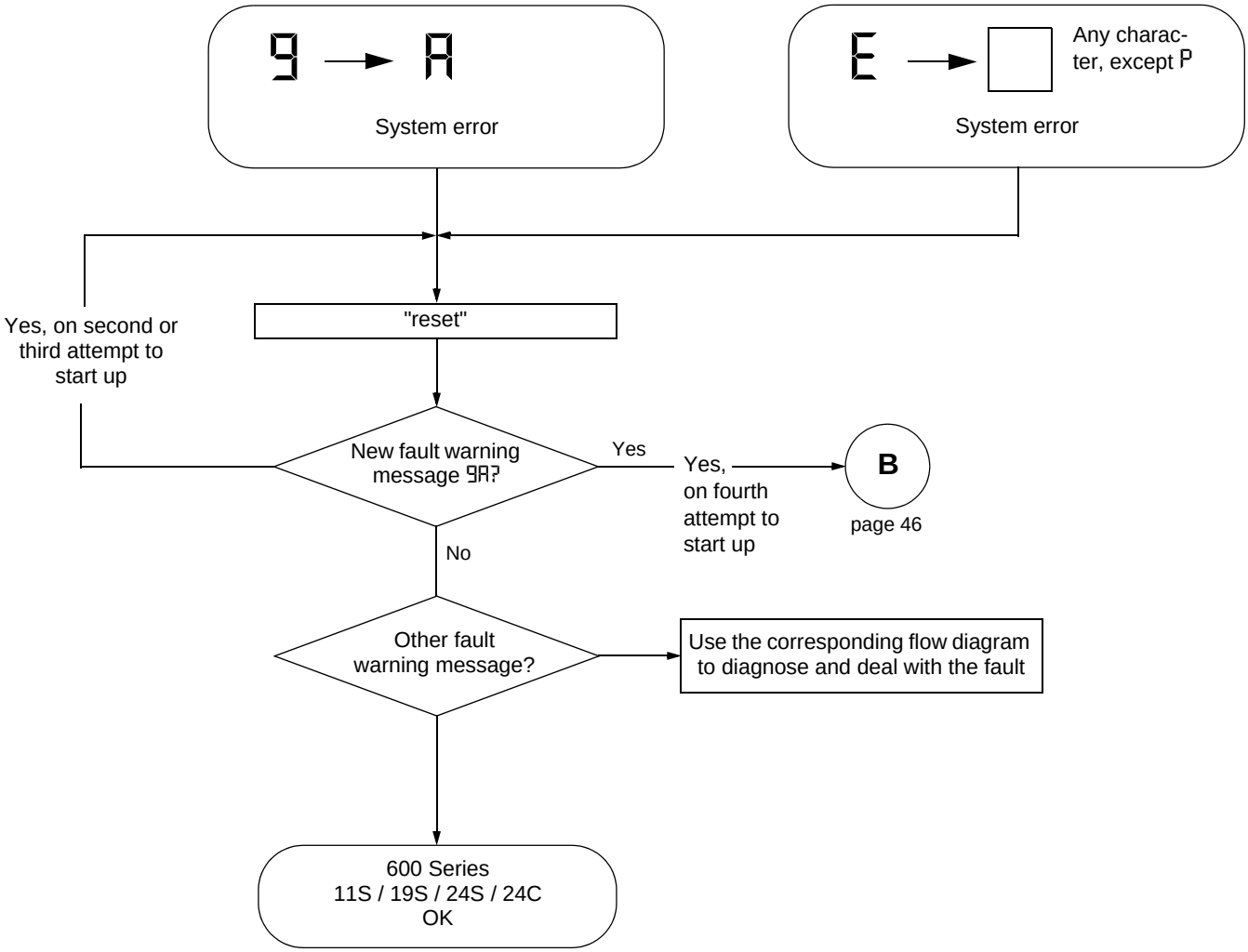

Fig. 34 Fault warning message 9A (with any character except P): System error

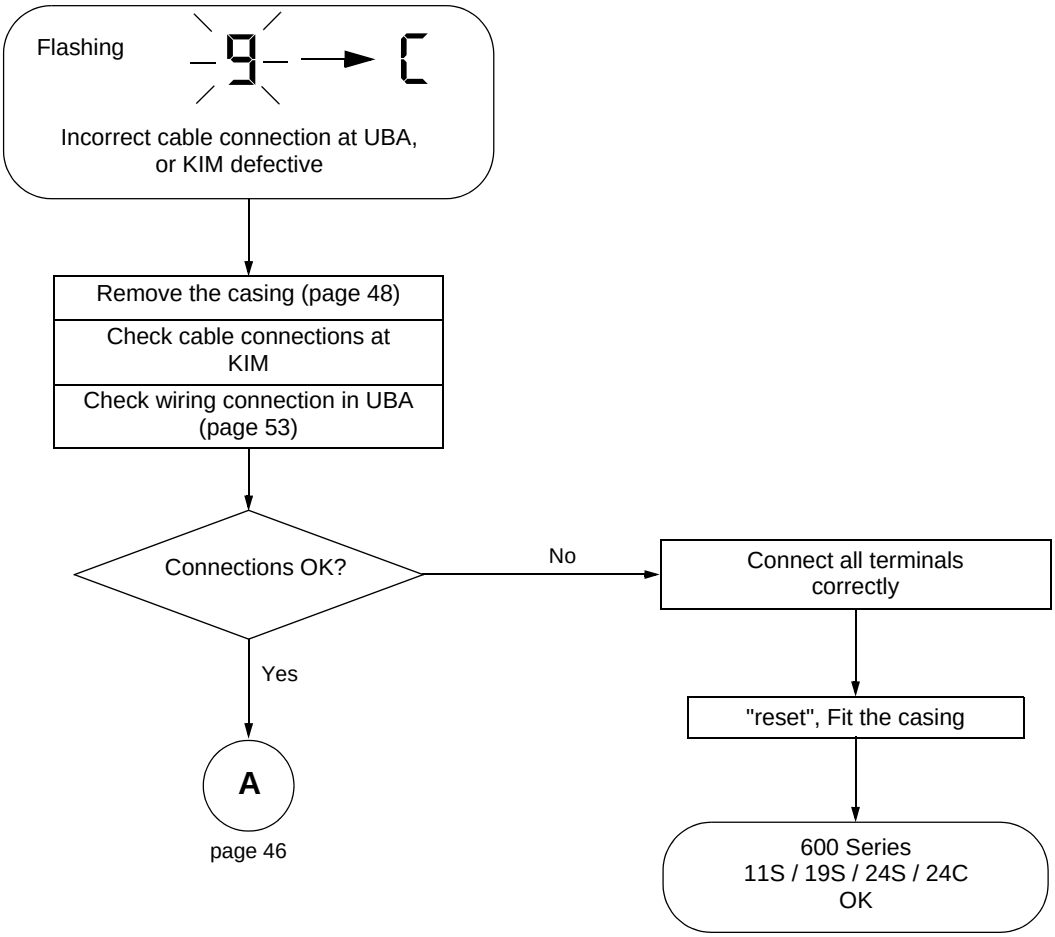

Fig. 35 Fault warning message 9C: Wiring to KIM connected incorrectly

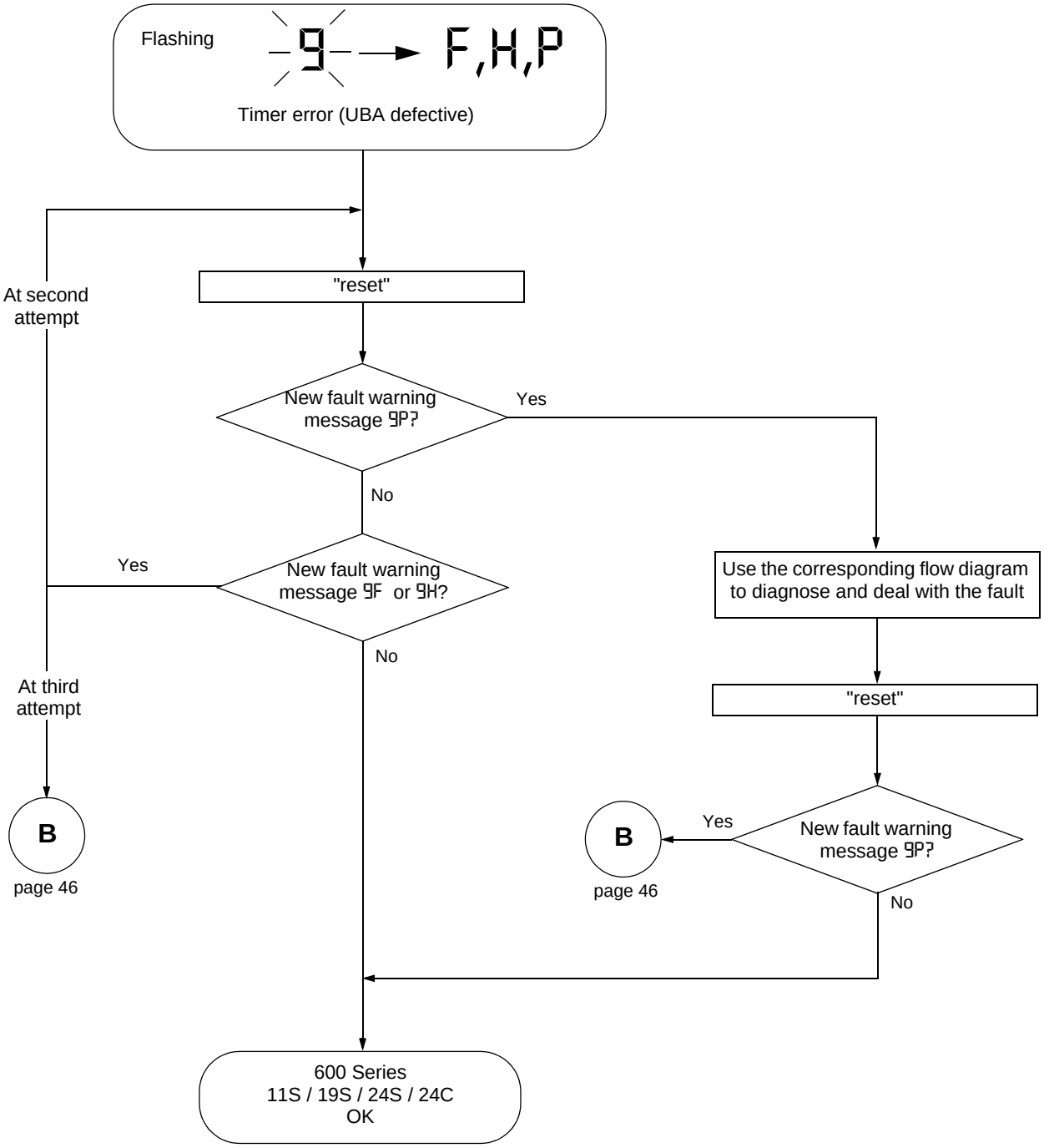

Fig. 36 Fault warning message 9F,H,P: System error (UBA defective), or KIM defective

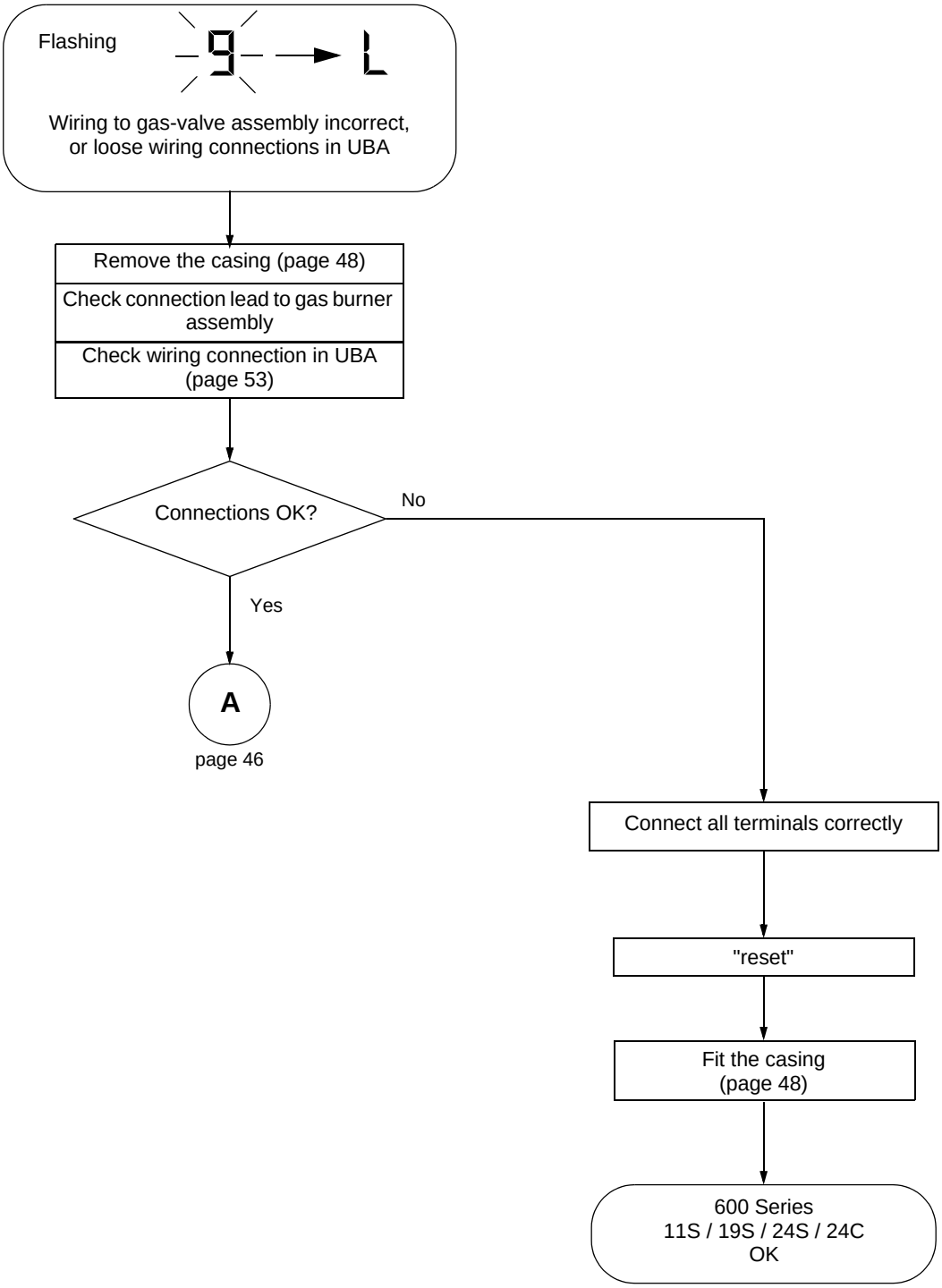

Fig. 37 Fault warning message 9L: Wiring to gas-valve assembly incorrect, or loose wiring connections in UBA.

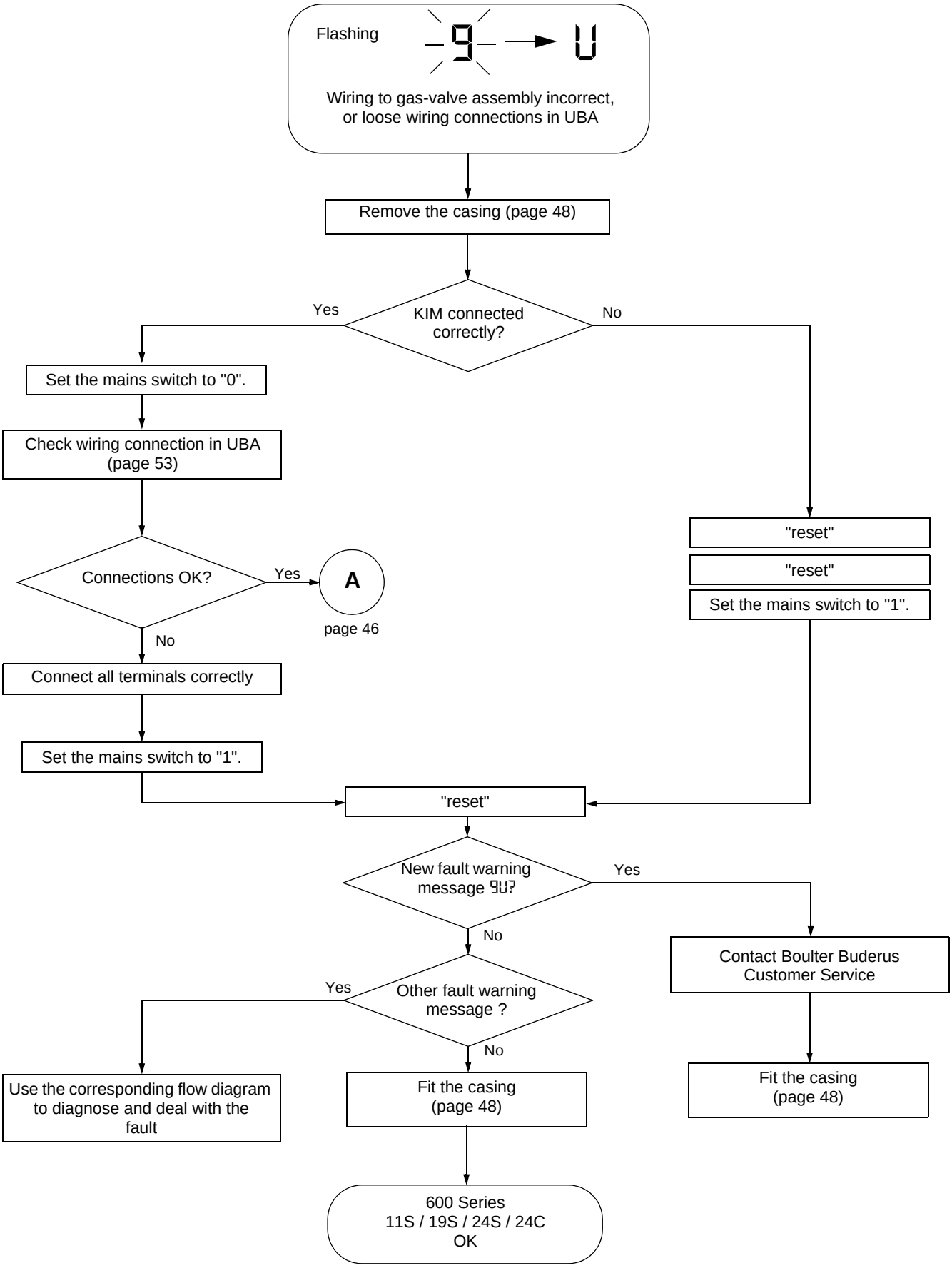

Fig. 38 Fault warning message 9U: Incorrect cable connection at UBA (KIM defective)

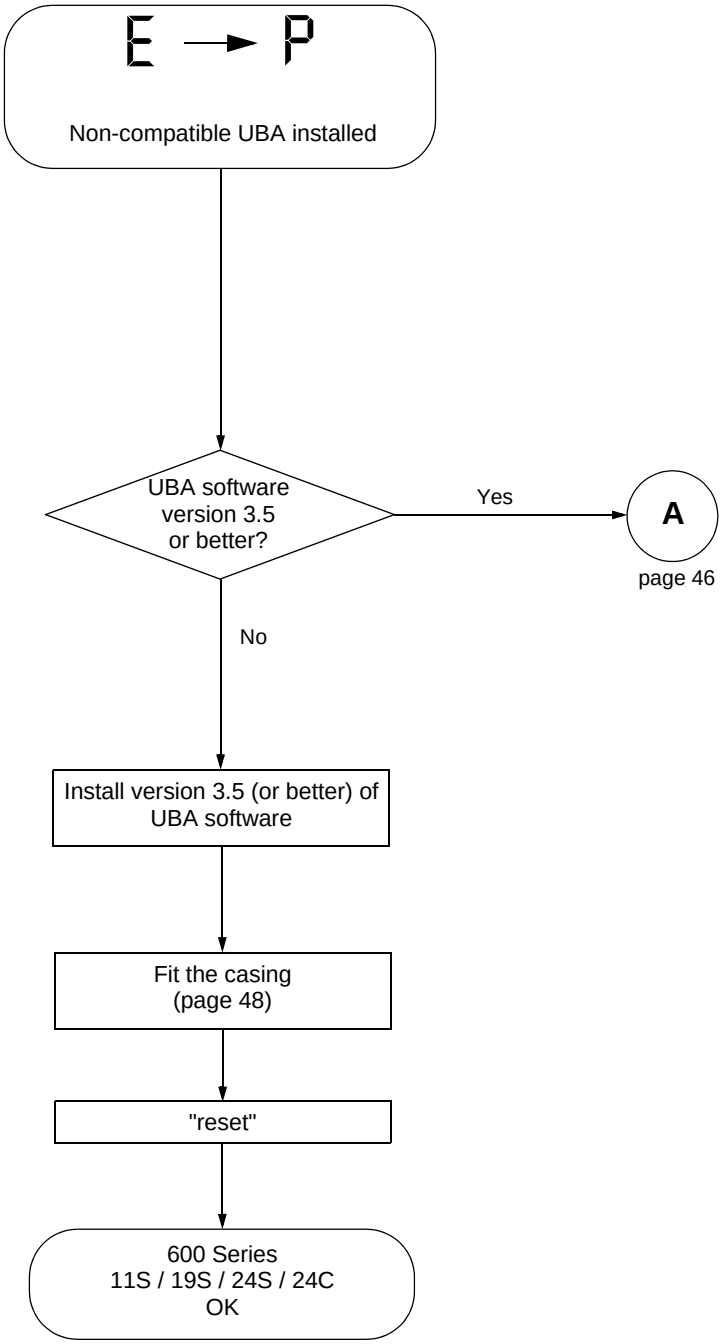

Fig. 39 Fault warning message EP: Non-compatible UBA installed

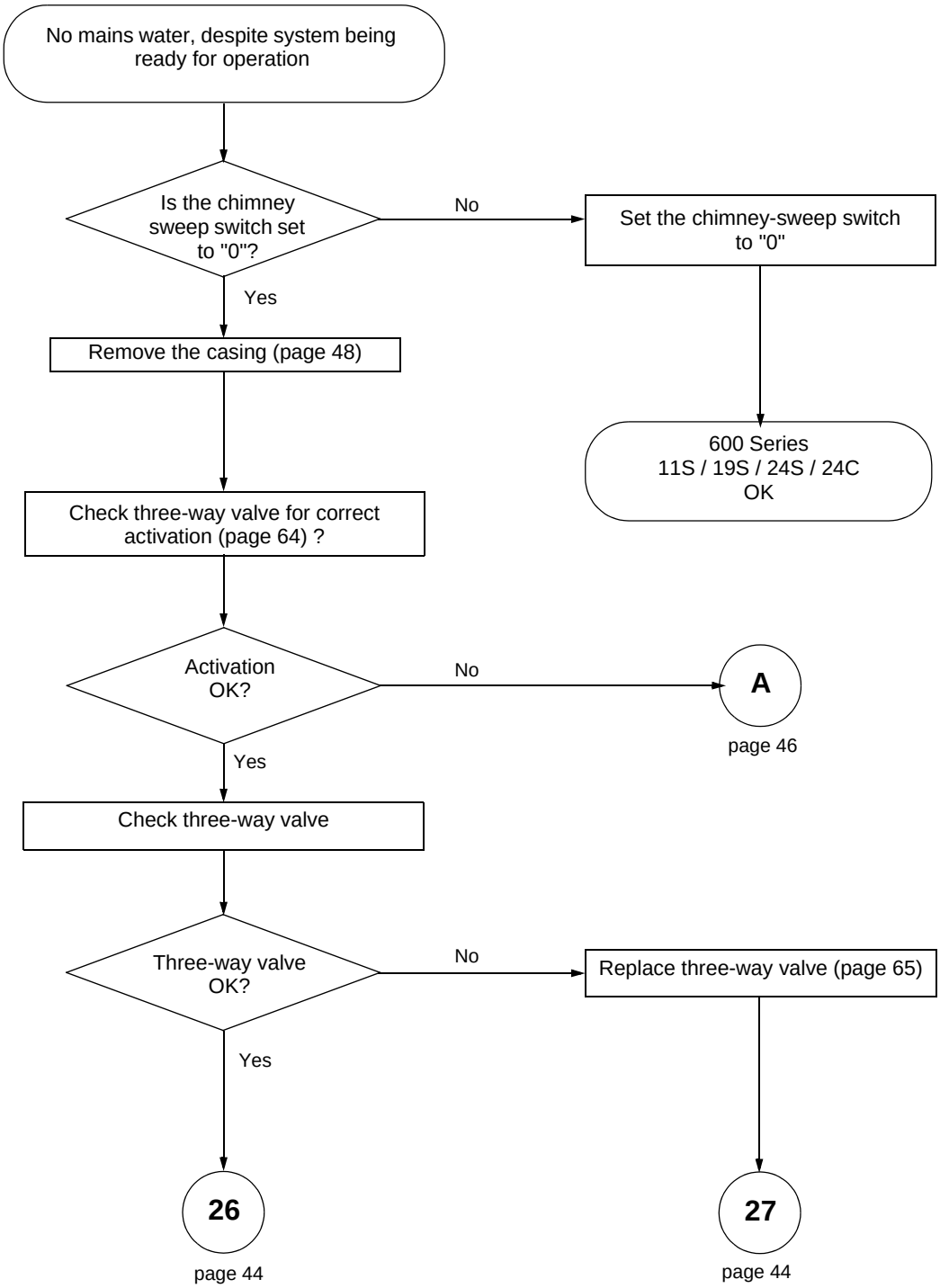

Fig. 40 Malfunction: No mains water, despite system being ready for operation

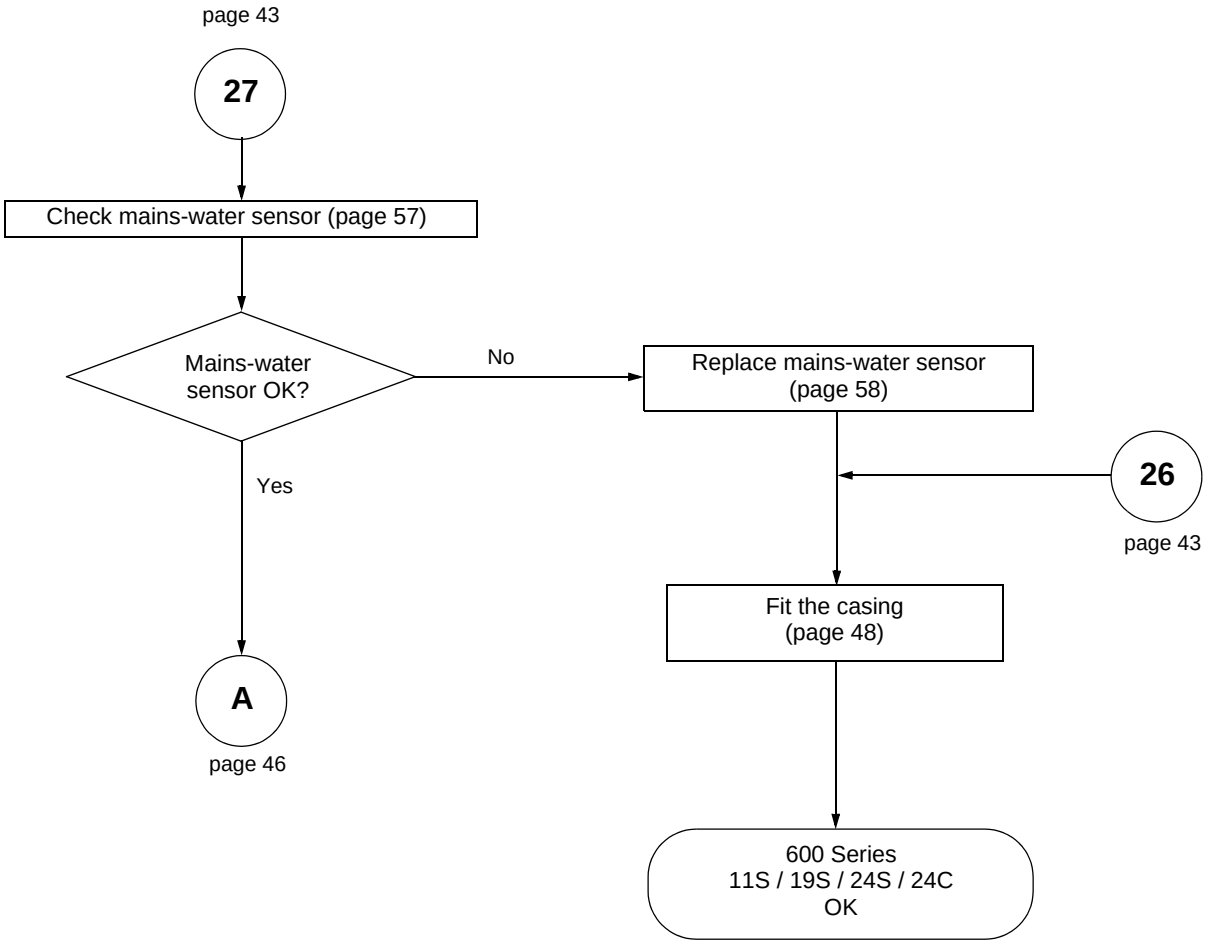

Fig. 41 Continued malfunction: No mains water, despite system being ready for operation

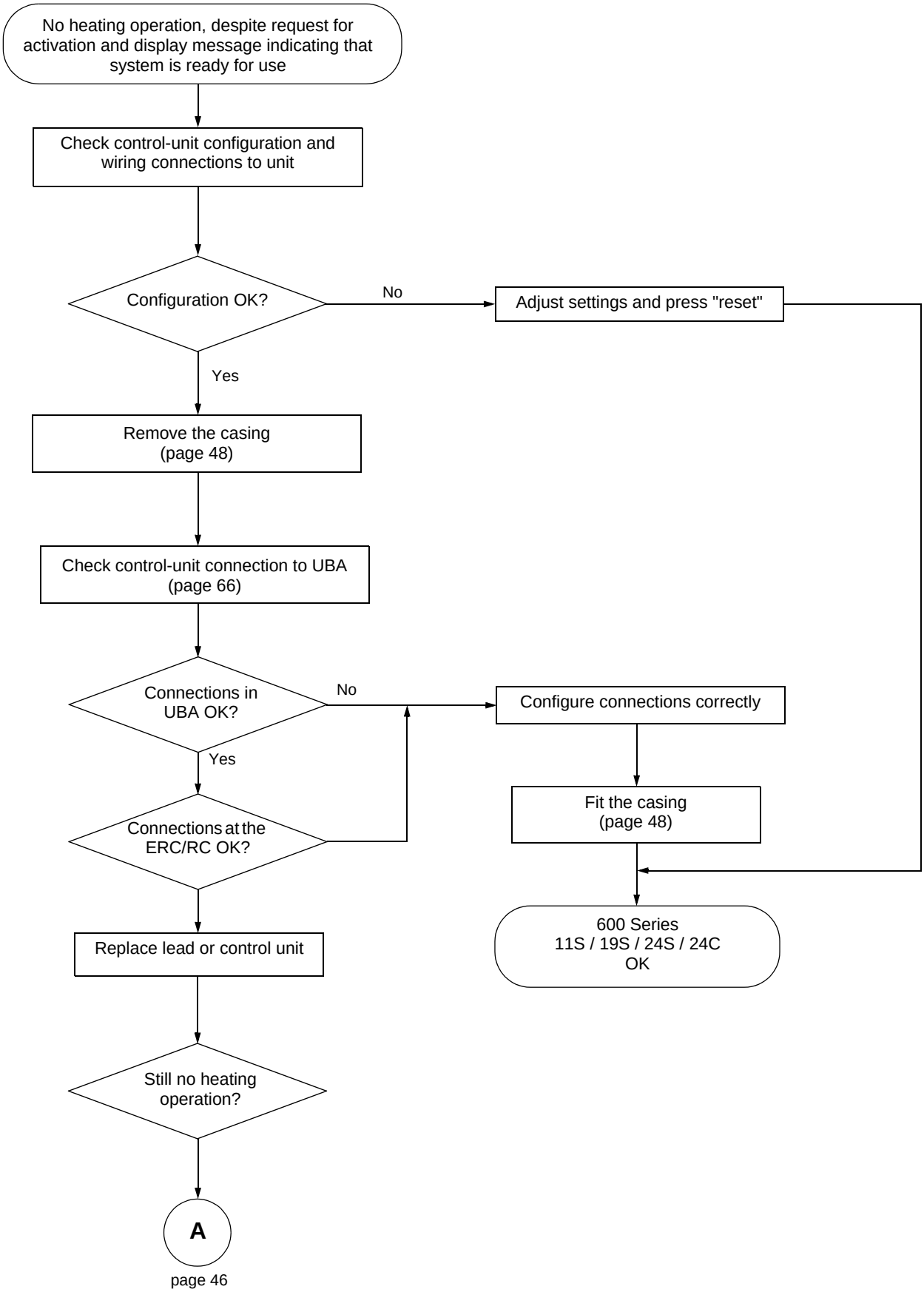

Fig. 42 Malfunction: No heating operation, despite request for activation and display message indicating that system is ready for use

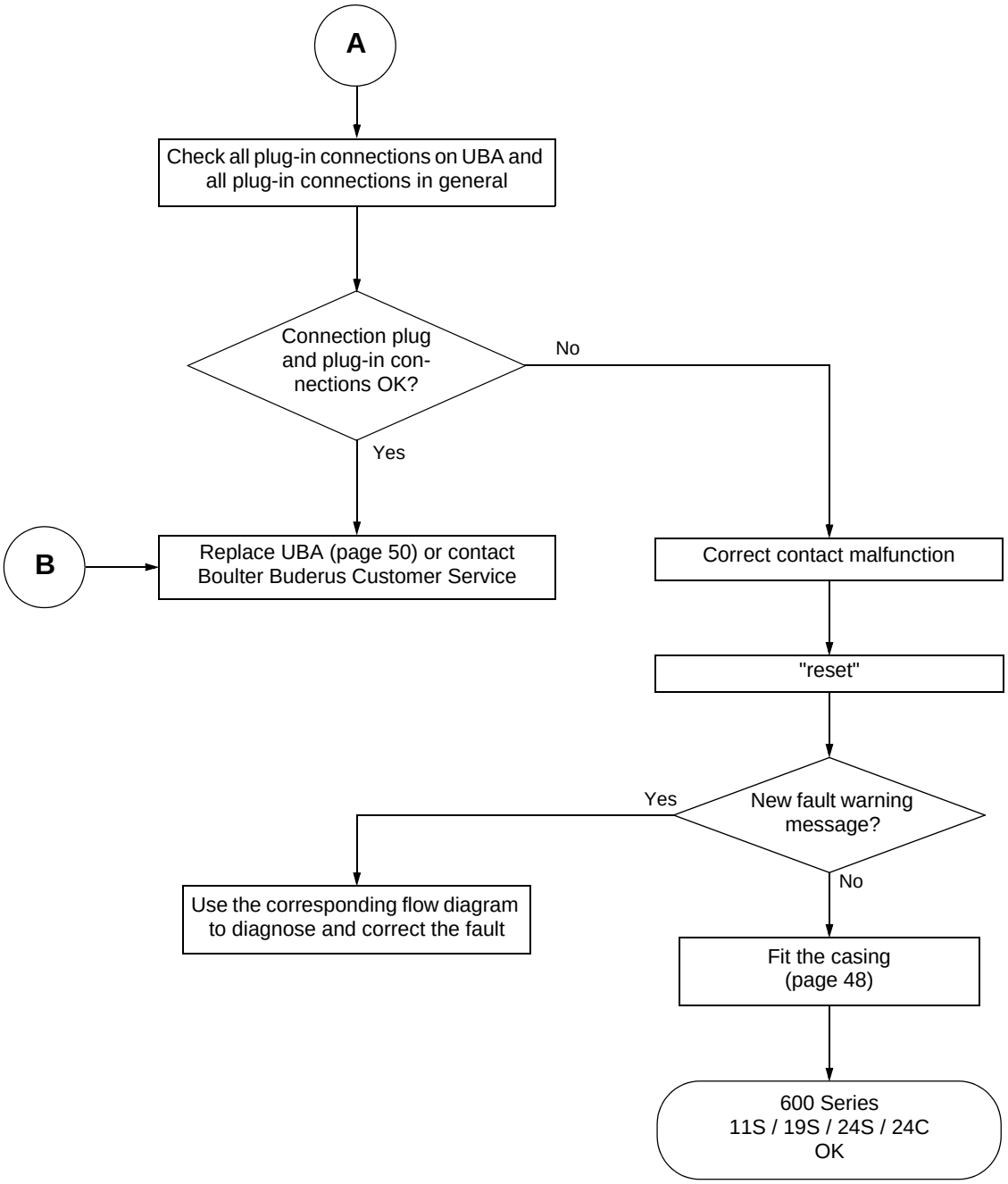

Fig. 43 Continued malfunction: No heating operation, despite request for activation and display message indicating that system is ready for use

3.1 Troubleshooting tasks

CAUTION
All work on the gas supply must be carried out by a CORGI registered engineer.
All work on water and electrical supplies must be carried out by a competent person.

3.1.1 Unblocking the 600 Series 11S / 19S / 24S / 24C

Press the “reset” button (fig. 44) after rectifying each fault.
A letter “**r**” will appear on the display.
This unblocks the UBA and returns it to standby mode.

NOTE
The system cannot be unblocked by disconnecting at the master switch.

If the "reset" button is not kept pressed for long enough, the display will first show a "**7**" and, after the Service button is pressed, a "**C**".
Unblock by pressing the “reset” button once more and keeping it pressed for the required time.

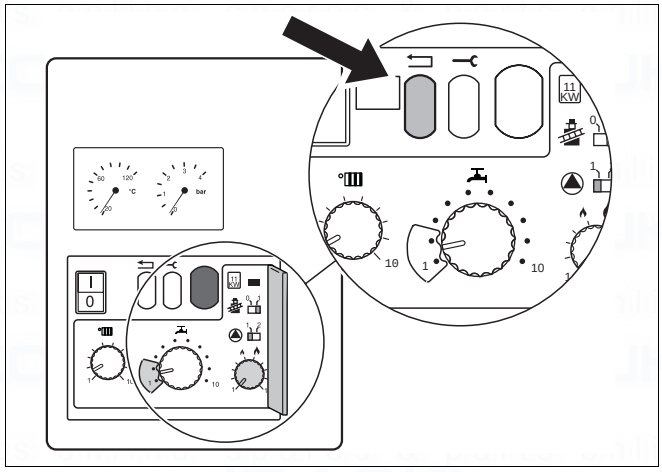

Fig. 44 "Reset" button

3.1.2 Chimney-sweep mode

Certain troubleshooting tasks must be carried out with the 600 Series 11S / 19S / 24S / 24C in heating mode.

- Before proceeding, open the cover of the second operating level on the UBA (fig. 45).
- Set the chimney-sweep switch to “**1**”.
- Remember to return the chimney-sweep switch to “**0**” once work is complete.
- Close the cover of the second operating level on the UBA.

NOTE
The system cannot be used to supply hot water while it is in chimney-sweep mode. With chimney sweep mode activated, the boiler heats up to its preset feed temperature.

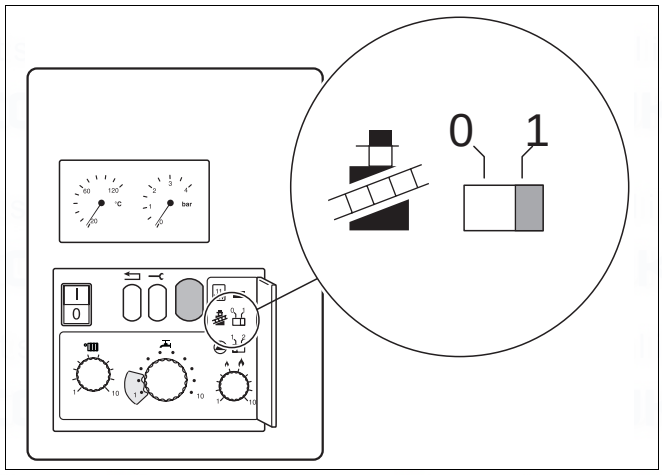

Fig. 45 Chimney-sweep switch

3.1.3 Removing and refitting the outer casing

- Note current display.
- Set the mains switch to “**0**”.
- Loosen the fixing screw (fig. 46, item 1).
- Detach the outer casing.
- To refit the casing, follow the above procedure in reverse order. Then return the mains switch to “**I**”.

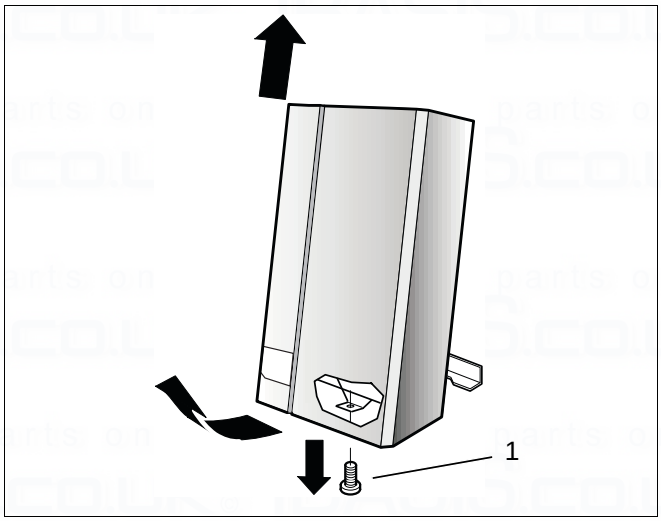

Fig. 46 Remove outer casing

3.1.4 Removing and refitting the combustion-chamber cover

- Open the clip fastenings (fig. 47, item 1).
- Remove combustion-chamber cover.
- To refit the cover, follow the above procedure in reverse order.

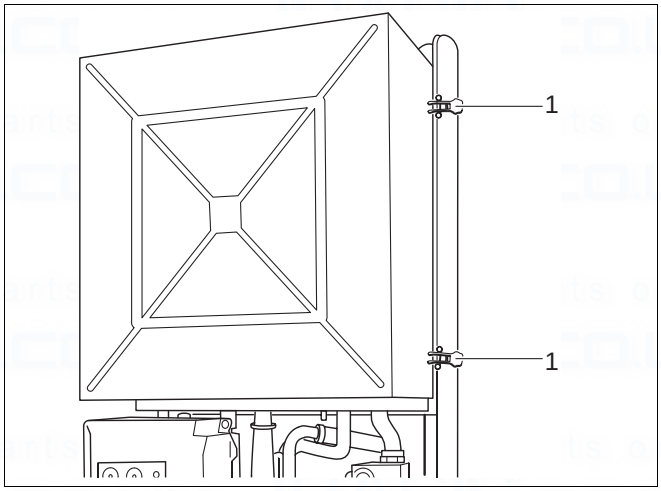

Fig. 47 600 Series 11S / 19S / 24S / 24C: Remove combustion-chamber cover

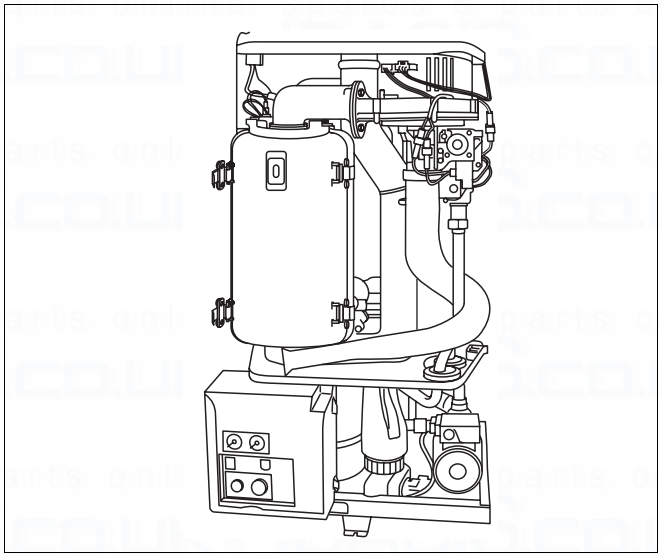

Fig. 48 600 Series 24C: Combi-unit

3.1.5 Checking the exhaust-gas sensor

- Detach plug-and-socket connection on cable to exhaust-gas sensor. Ensure that no cable is earthed (grounded) at any point.
- Allow the exhaust-gas sensor to cool down.
  Activation temperature:
  600 Series 11S / 19S / 24S / 24C: 105 °C
- Check exhaust-gas sensor for free throughput. If throughput is not free, the exhaust-gas sensor is defective.
- Replace any exhaust-gas sensor found to be defective. Ensure you use only genuine Boulter Buderus spare parts.
- If the exhaust-gas sensor is working correctly, plug it in once more.

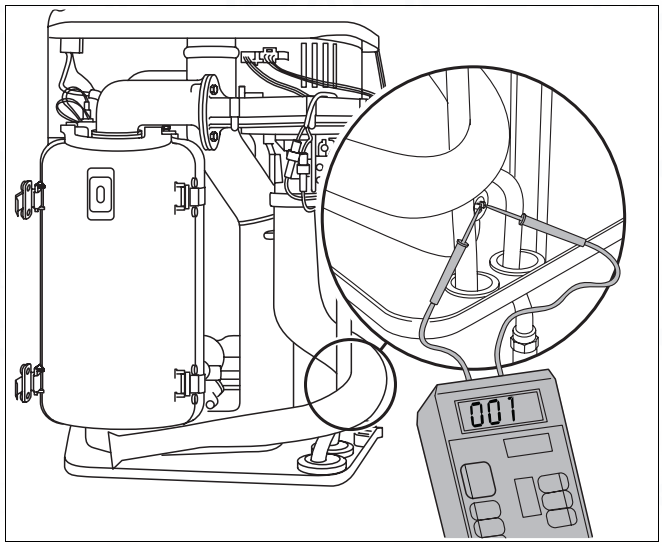

Fig. 49 600 Series 11S / 19S / 24S / 24C: Checking the exhaust-gas sensor

3.1.6 Replacing the exhaust-gas sensor

- Unscrew the flow-backup mounting.
- Detach the cable plug at the exhaust-gas sensor.
- Loosen both retaining screws on the exhaust-gas sensor.
- Remove the exhaust-gas sensor and replace with a new unit (fig. 50).
- Retighten the retaining screws.
- Reconnect the cable plug.
- Screw the mounting into place.

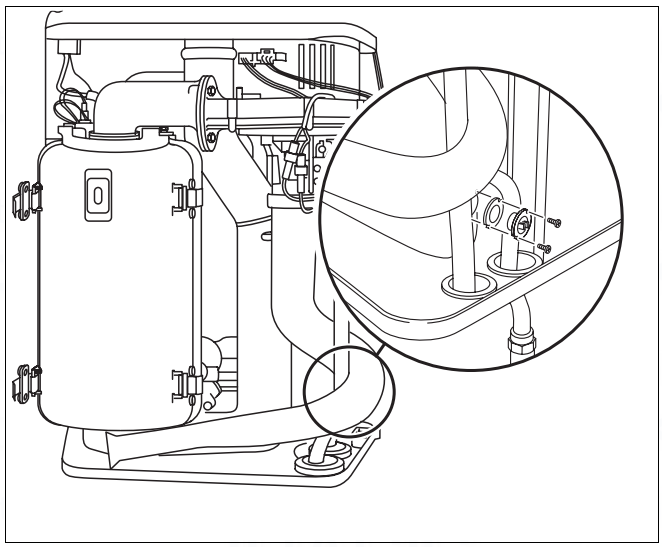

Fig. 50 600 Series 11S / 19S / 24S / 24C: Replacing the exhaust-gas sensor

3.1.7 Checking the air intake and outlet openings

- Check to ensure that the air intake and outlet openings are of sufficient size, and that they are not obstructed or clogged.

3.1.8 Replacing the UBA

- Disconnect the system from the power supply.
- Loosen crosshead screw (fig. 51, item 1) on UBA housing.
- Swivel UBA housing downwards.

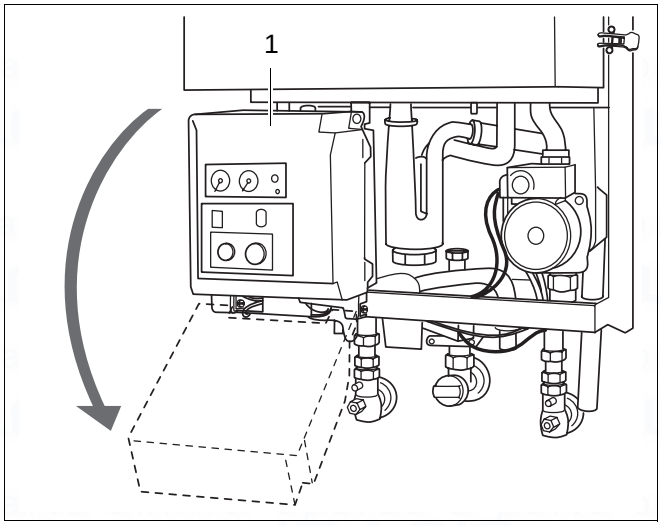

Fig. 51 Swivel UBA housing downwards

- Open the UBA housing (fig. 52).
- Note the position of the cable plugs, disconnect all cable plugs.
- Open the mains connection box by loosening the screw.
- Loosen the four screws and remove the strain-relief clamp.

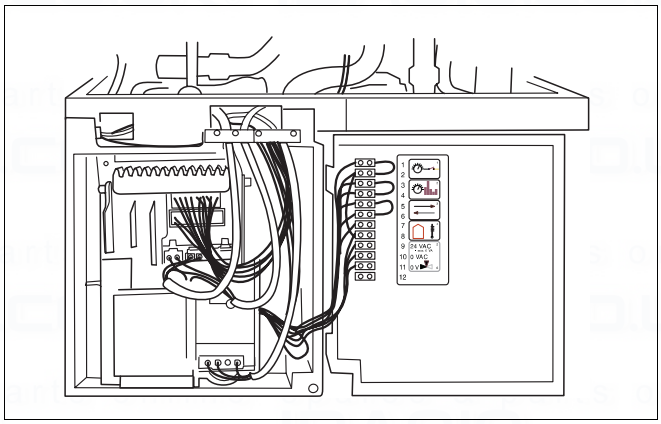

Fig. 52 Opening the UBA housing

- Carefully lift the UBA and remove by pulling forwards (snap lock) (fig. 53).
- Fit new UBA.
- Reconnect all plug-in cables to their correct sockets.
- Feed the mains lead in through the strain-relief clamp in the connection box and connect to the terminals as per the wiring diagram.
- Retighten the strain-relief clamp and shut the connection box.
- Shut the mains connection box.
- Shut the UBA housing.
- Swivel the UBA housing upwards and screw into place.
- Fit the casing.
- Connect system to mains power supply.

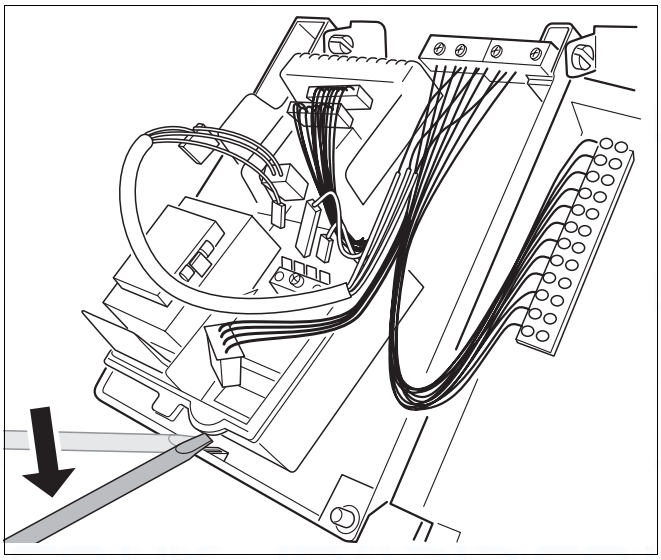

Fig. 53 Carefully lift the UBA to remove

3.1.9 Checking the fan

- Set the mains switch to “**0**”.
- Disconnect the fan's plug and socket connection.
- Connect a multimeter (230 V AC).
- Turn the mains power switch to “**I**”.
- Take voltage reading at measuring device.
  If the voltage reading is 230 V, the power supply is in order.
- Set the mains switch to “**0**”.
- If the power supply is in order, plug the unit in once more.
- Turn the mains power switch to “**I**”.
- If the fan now fails to run, it must be replaced.
- If the fan runs at only partial load (i.e. effective operation of the boiler is not possible), troubleshooting should start at the connection cable to the UBA or UBA.

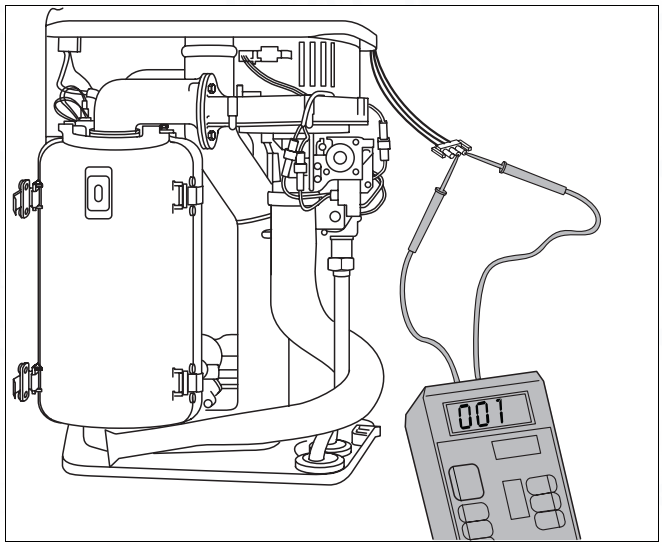

Fig. 54 Checking the fan

3.1.10 Replacing the fan

- Shut the gas cock.
- Disconnect the system from the power supply.
- Disconnect the fan, using the plug and socket from the power supply (fig. 55, item 1), loosen the UBA control line at the fan (fig. 55, item 2) and the gas burner fitting (fig. 55, item 3).
- Loosen the union nut (fig. 55, item 4) on the gas burner fitting.

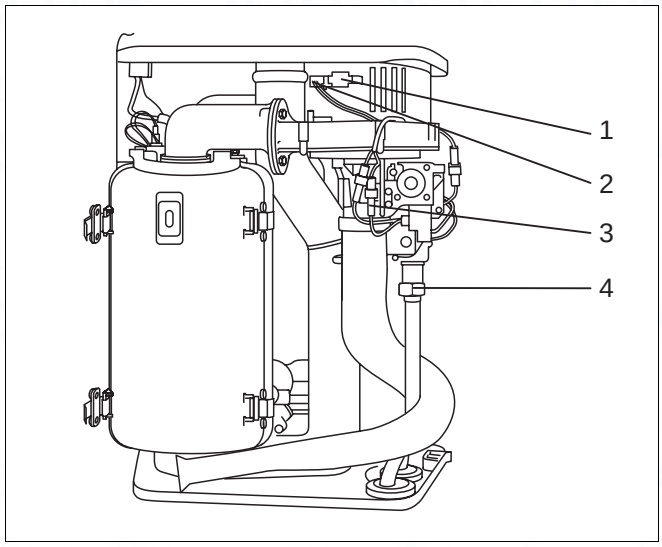

Fig. 55 Replacing the fan on the 600 Series: Loosen plug and union nut

- Push the safety plate out of the way (fig. 56, item 1).
- Turn air suction tube and pull off from below.

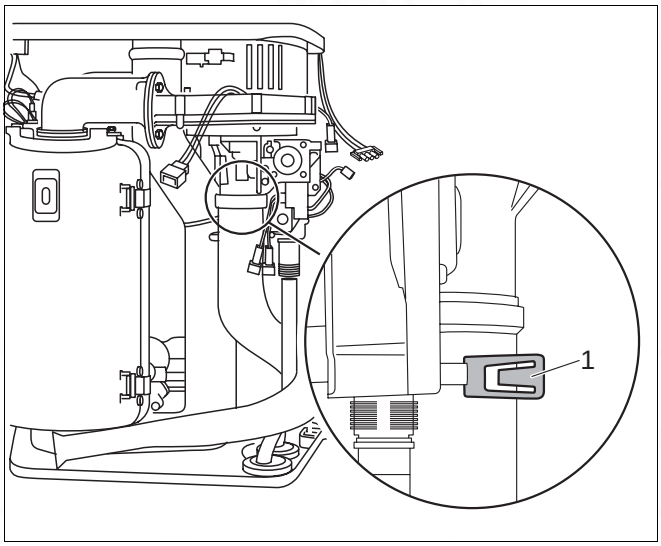

Fig. 56 Replacing the fan on the 600 Series: Remove the air suction tube

- Swivel the "CombiVENT" gas combination unit forward (fig. 57, item 1)
- Remove the "CombiVENT" gas combination unit from its bayonet connector and pull upwards to detach (fig. 57, item 2).

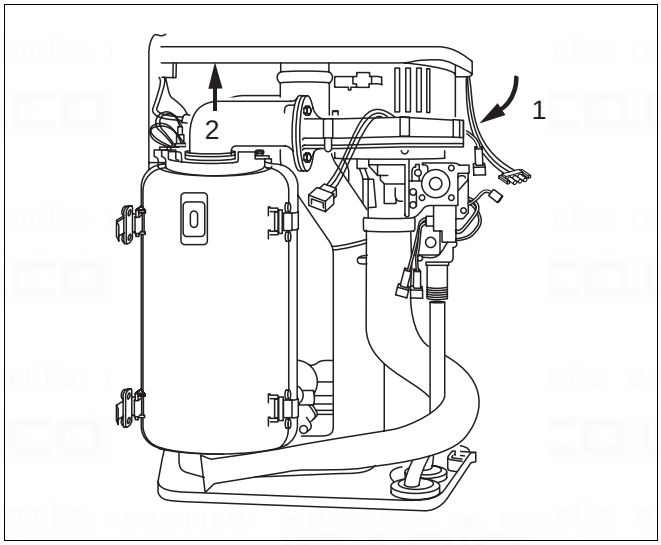

Fig. 57 Replacing the fan on the 600 Series: Remove the gas connection unit

- Detach the fan by loosening the 2 x 2 screws on the connection unit.
- Replace the fan.
- Refit by following the above procedure in reverse.

NOTE
Once installation has been completed successfully, carry out leak testing as per "Installation and Servicing Instructions" supplied with 600 Series 11S / 19S / 24S / 24C.

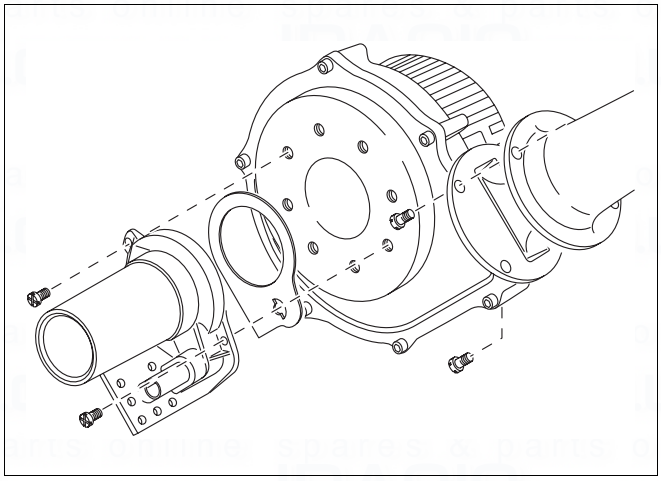

Fig. 58 Replacing the fan on the 600 Series: Replace the fan

3.1.11 Checking the wiring connections of the UBA

- Disconnect the system from the power supply.
- Loosen crosshead screw on UBA housing.
- Swivel UBA housing downwards.
- Open the UBA housing.
- Check all cable terminals for tightness and resecure/retighten as required.
- Shut the UBA housing.
- Swivel the UBA housing upwards and screw into place.
- Connect system to mains power supply.

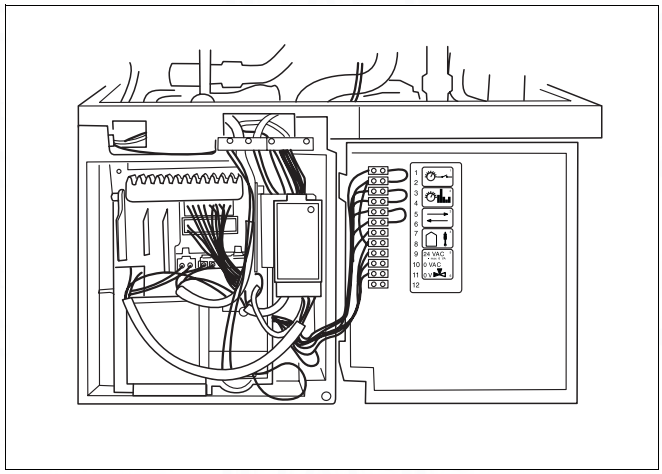

Fig. 59 Checking the wiring connections of the UBA

3.1.12 Checking the miniature fuses

- Disconnect the system from the power supply.
- Loosen crosshead screw on UBA housing.
- Swivel UBA housing downwards.
- Open the UBA housing.
- Check miniature fuses (fig. 60) for correct functioning, or carry out visual inspection. If defective, fit new fuse (1.25 AT).

Fuse	Function
1	Incandescent firing electrode
2	UBA, sensors, thermostat valve
3	UBA, three-way valve

- Shut the UBA housing.
- Swivel the UBA housing upwards and screw into place.
- Connect system to mains power supply.

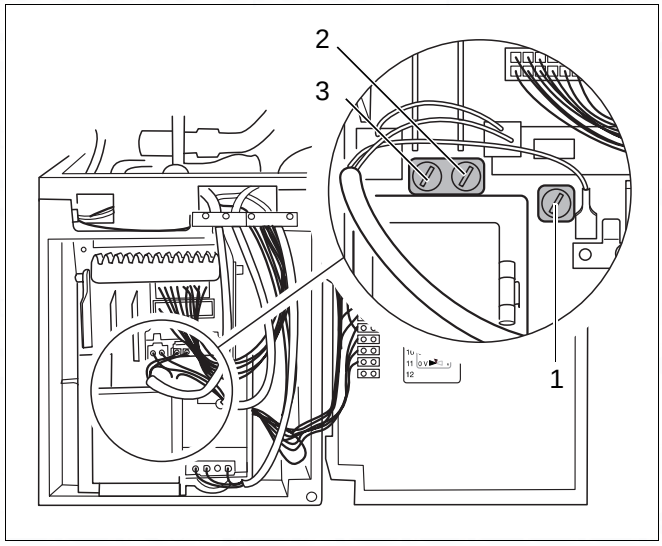

Fig. 60 Checking the miniature fuse

3.1.13 Checking the connections for the second solenoid valve, modulating pump and floor thermostat switching contact

- Pull on mains connection box to detach.
- Check connections of second solenoid valve (fig. 61, item 1), modulating pump (fig. 61, item 2) and floor thermostat switching contact (fig. 61, item 3).

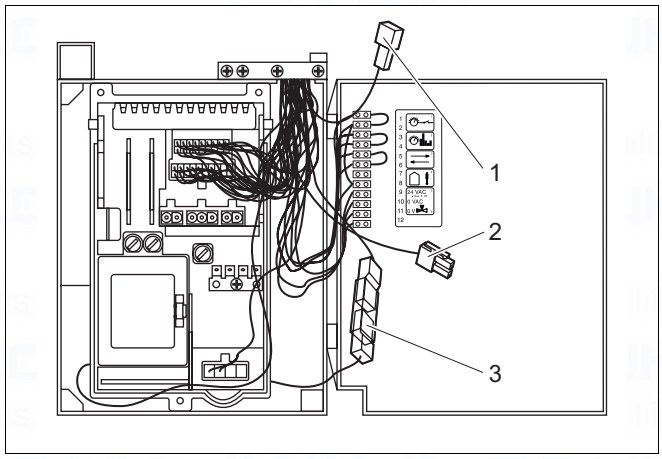

Fig. 61 Connections for the second solenoid valve, modulating pump and external switching contact

3.1.14 Checking the circulation pump

- Remove screw plug on circulation pump (fig. 62).
- Turn the UBA mains power switch to “**I**”.
- Check to ensure that the circulation pump is running. The circulation pump’s running mechanism may become blocked if the heating system has been out of use for an extended period. Use a screwdriver to rotate the circulation pump in its normal running direction and release the blockage in question. If this procedure does not work, replace the circulating pump.
- If the circulation pump is working correctly, screw the plug back in.

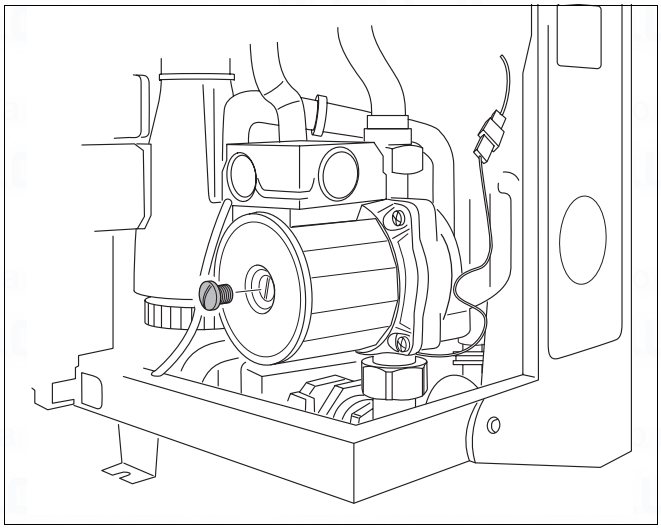

Fig. 62 600 Series 11S / 19S / 24S / 24C: Checking the circulation pump

3.1.15 Replacing the circulation pump

- Disconnect the system from the power supply.
- Shut the servicing cock.
- Drain the 600 Series 11S / 19S / 24S / 24C as per the "Installation and Servicing Instructions".
- Loosen the screw on the terminal box (fig. 63, item 2) of the circulation pump and open the terminal box. Note the wiring layout, and loosen the cables (fig. 63, item 1).
- Loosen the screw-in connections on the circulation pump (fig. 63, item 3) and remove the pump.
- Fit new pump and connect to system.
- Connect cables in previously-noted order inside terminal box, close terminal box and screw shut.
- Connect system to mains power supply.
- Open servicing cocks.

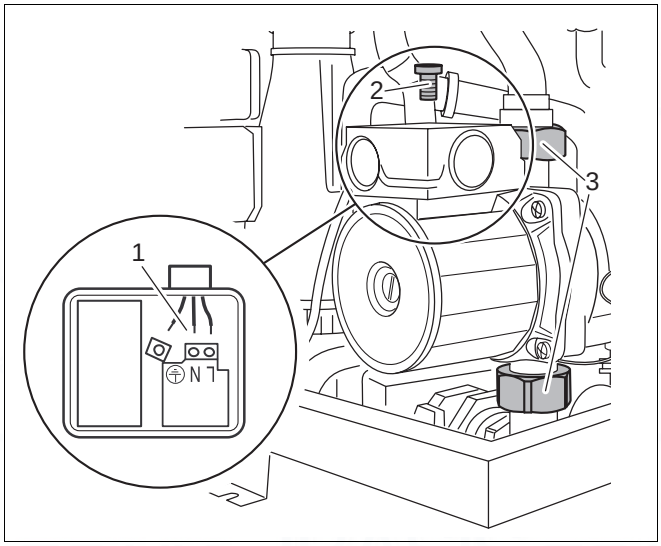

Fig. 63 600 Series 11S / 19S / 24S / 24C: Replacing the circulation pump

NOTE
Fill the 600 Series 11S / 19S / 24S / 24C and purge the system of air as indicated in the installation and servicing instructions.

3.1.16 Checking the safety sensor

- Unplug cable connection from sensor.
- Measure resistance of sensor (fig. 64, item 1).
- Use a second-reading thermometer to measure the temperature around the sensor.
- Compare readings with values shown intable 3 on page 57. If there is any mismatch (i.e. > 5%), the sensor is defective.
- If the sensor is working correctly, plug it in once more.

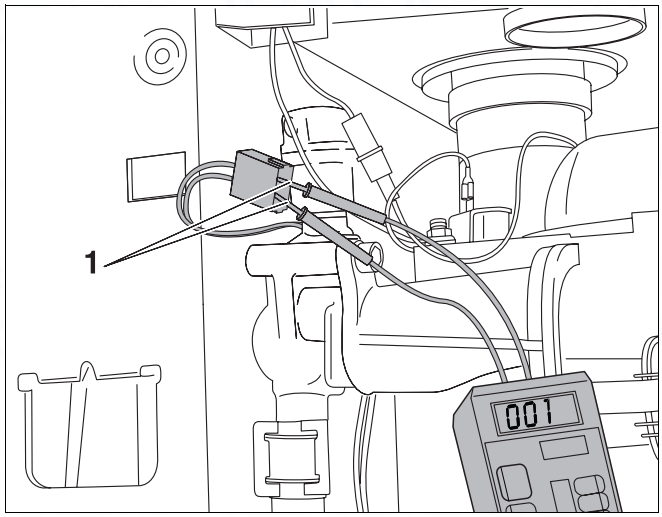

Fig. 64 600 Series 11S / 19S / 24S / 24C: Checking the safety sensor

3.1.17 Replacing the safety sensor

- Shut the servicing cock.
- Drain the 600 Series 11S / 19S / 24S / 24C as per the "Installation and Servicing Instructions".
- Loosen the plug-in connection (fig. 65, item 1).
- Unscrew the sensor (fig. 65, item 2) and replace with a new unit.
- Plug in cable connection.
- Open servicing cocks.

NOTE
Fill the 600 Series 11S / 19S / 24S / 24C and purge the system of air as indicated in the installation and servicing instructions.

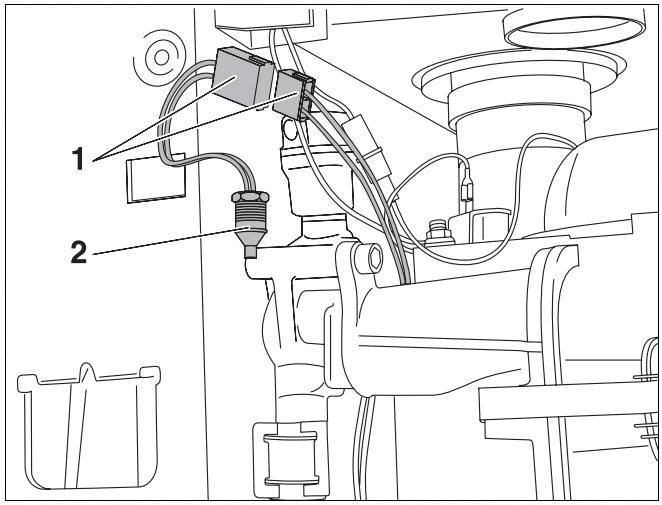

Fig. 65 600 Series 11S / 19S / 24S / 24C: Replacing the safety sensor

3.1.18 Checking the safety sensor connection lead

Check to ensure that all plug-in connections on the sensor and UBA are in order. Note that an incorrectly-inserted plug can lead to the generation of error messages. Start up the boiler by pressing the “reset” button.

- Set the mains switch to “**0**”.
- Disconnect the system from the power supply.
- Unplug cable connection from feed sensor.
- Disconnect 18-pin plug from UBA.
- Use a continuity tester to check the cable between the plug-in connection and the 18-pin plug in the UBA. The test should be carried out on connections 06-18 and 08-18 (fig. 66).
- If the cables are in order, plug them in.
- Connect system to mains power supply.
- Turn the mains power switch to “**I**”.

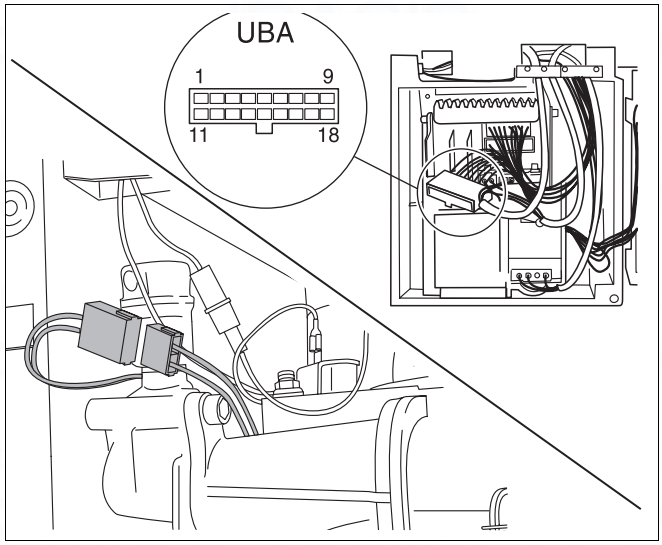

Fig. 66 600 Series 11S / 19S / 24S / 24C: Checking the safety sensor connection lead

3.1.19 Checking the feed sensor

- Unplug cable connection from sensor.
- Measure resistance of sensor (fig. 67, item 1).
- Use a second-reading thermometer to measure the temperature around the sensor.
- Compare readings with values shown in table 3 on page 57. If there is any mismatch (i.e. > 5%), the sensor is defective.
- If the sensor is working correctly, plug it in once more.

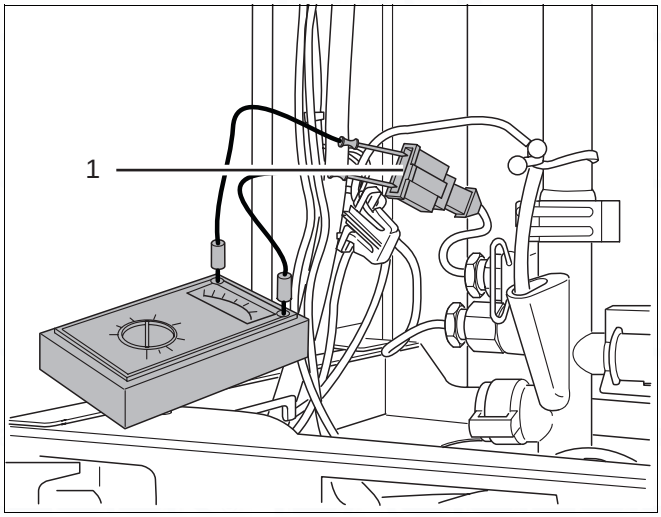

Fig. 67 600 Series 11S / 19S / 24S / 24C: Checking the feed sensor

3.1.20 Replacing the feed sensor

- Shut the servicing cock.
- Drain the 600 Series 11S / 19S / 24S / 24C as per the "Installation and Servicing Instructions".
- Loosen the plug-in connection (fig. 68, item 1).
- Unscrew the sensor (fig. 68, item 2) and replace with a new unit.
- Plug in cable connection.
- Open servicing cocks.

NOTE
Fill the 600 Series 11S / 19S / 24S / 24C and purge the system of air as indicated in the installation and servicing instructions.

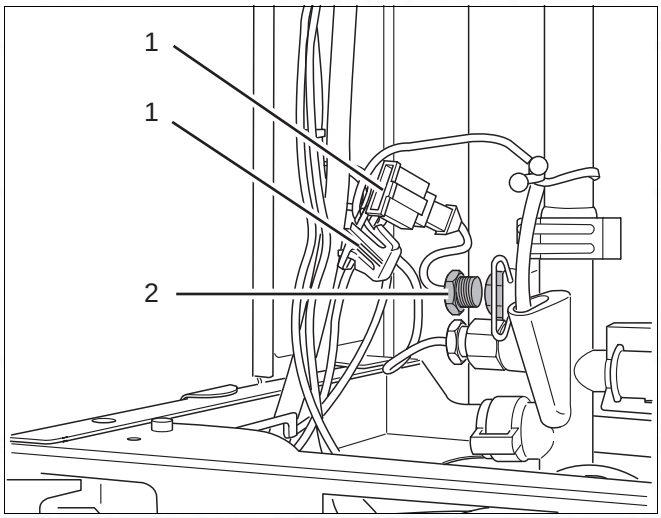

Fig. 68 600 Series 11S / 19S / 24S / 24C: Replacing the feed sensor

3.1.21 Checking the feed sensor connection lead

Check to ensure that all plug-in connections on the sensor and UBA are in order. Note that an incorrectly-inserted plug can lead to the generation of error messages. Start up the boiler by pressing the “reset” button.

- Set the mains switch to “**0**”.
- Disconnect the system from the power supply.
- Unplug cable connection from feed sensor.
- Disconnect 20-pin plug from UBA.
- Use a continuity tester to check the cable between the plug-in connection and the 20-pin plug in the UBA. The test should be carried out on connections 05-20 and 18-20 (fig. 69).
- If the cables are in order, plug them in.
- Connect system to mains power supply.
- Turn the mains power switch to “**I**”.

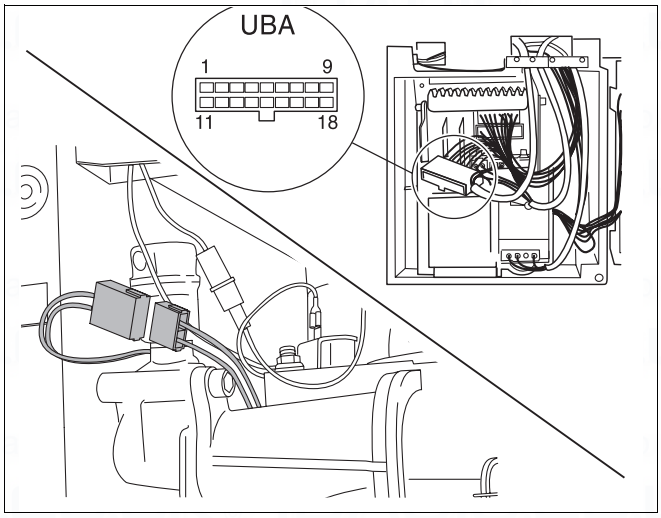

Fig. 69 600 Series 11S / 19S / 24S / 24C: Checking the feed sensor connection lead

3.1.22 Checking the domestic hot water / mains water supply

- Disconnect the plug-and-socket connection on the hot-water sensor cable (fig. 70, item 1) and/or the mains-water sensor (fig. 70, item 2).
- Measure resistance, take a temperature reading at the thermal pressure gauge (tolerance ± 5 K) and compare with the values listed in table 3. If there is any marked mismatch, the hot-water sensor is defective.
- If the hot-water/mains-water sensor is in order, plug it back in.

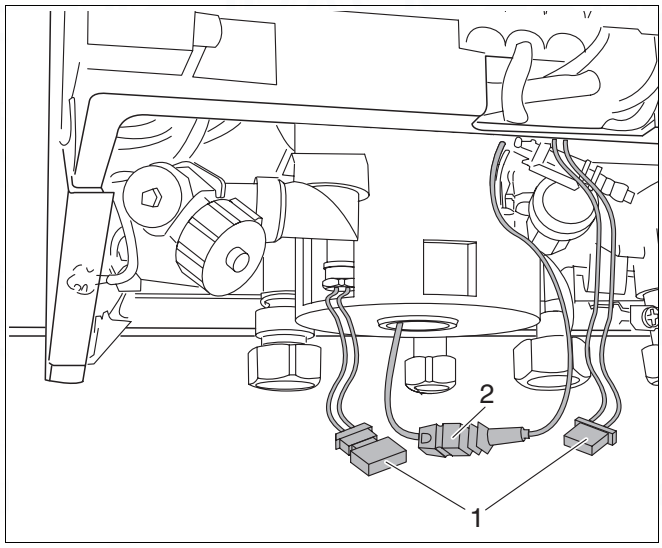

Fig. 70 Checking the domestic hot water / mains water supply

Temperature [°C]	**Resistance** [Ω]
0	29490
5	23462
10	18787
15	15136
20	12268
25	10000
30	8197
35	6754
40	5594
45	4656
50	3893
55	3271
60	2760
65	2339
70	1990
75	1700
80	1458
85	1255
90	1084
95	939,6
100	817,2

Table 3 Resistance values for hot-water/mains-water sensor (approximate values)

3.1.23 Changing the domestic hot water / mains water supply

- Shut the servicing cock.
- Drain the 600 Series 11S / 19S / 24S / 24C as per the "Installation and Servicing Instructions".
- Disconnection plug-and-socket connection on cable to hot-water/mains-water sensor.
- Remove insulation mounting (fig. 71, item 1) and detach insulation.

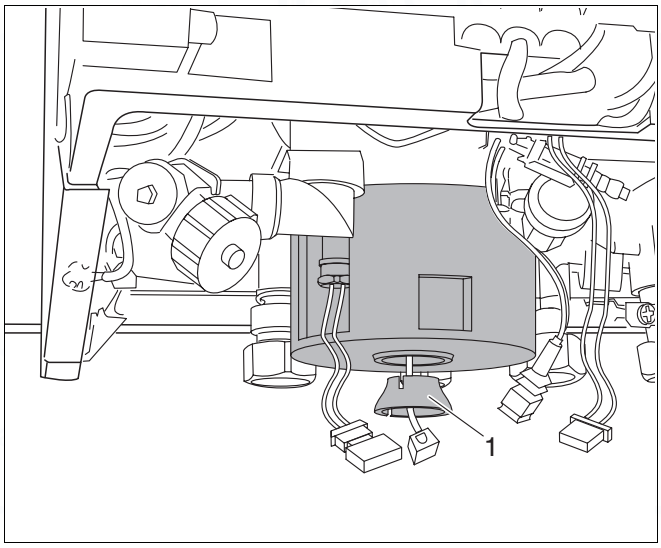

Fig. 71 Changing the domestic hot water / mains water supply

- Pull out the sensor fuses (fig. 72).
- Unscrew hot-water/mains-water sensor and replace with new unit.
- Refit insulation and corresponding mounting elements.
- Plug cable connection in once more.
- Open servicing cocks.
- Fill the 600 Series 11S / 19S / 24S / 24C and purge the system of air as indicated in the installation and servicing instructions.

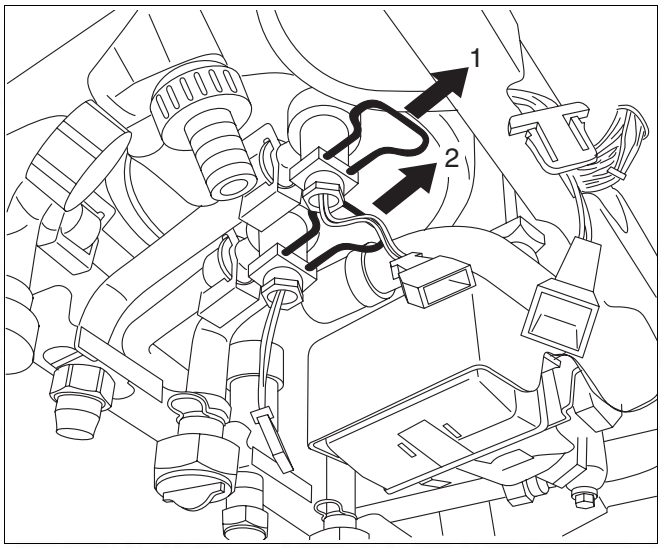

Fig. 72 Changing the domestic hot water / mains water supply

3.1.24 Checking the incandescent firing electrode

- Disconnect the system from the power supply.
- Loosen crosshead screw on UBA housing.
- Swivel UBA housing downwards.
- Open the UBA housing.
- Unplug and remove incandescent firing electrode from UBA housing (fig. 73).
- Check incandescent firing electrode for free throughput. If throughput is free, the incandescent firing electrode is in order.
- If the incandescent firing electrode is in order, plug the cable into the UBA housing.
- Shut the UBA housing.
- Swivel the UBA housing upwards and screw into place.
- Connect system to mains power supply.

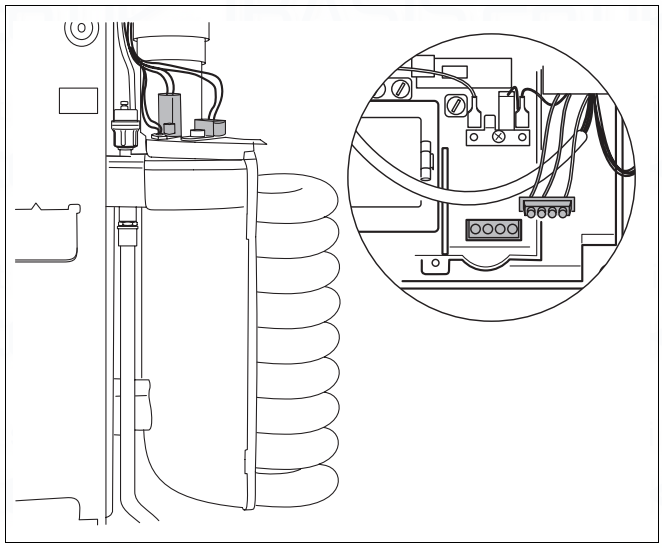

Fig. 73 Checking the incandescent firing electrode

3.1.25 Replacing the incandescent firing electrode

- Disconnect the system from the power supply.
- Remove combustion-chamber cover.
- Remove the earth (ground) lead from the incandescent firing electrode (fig. 74, item 1).

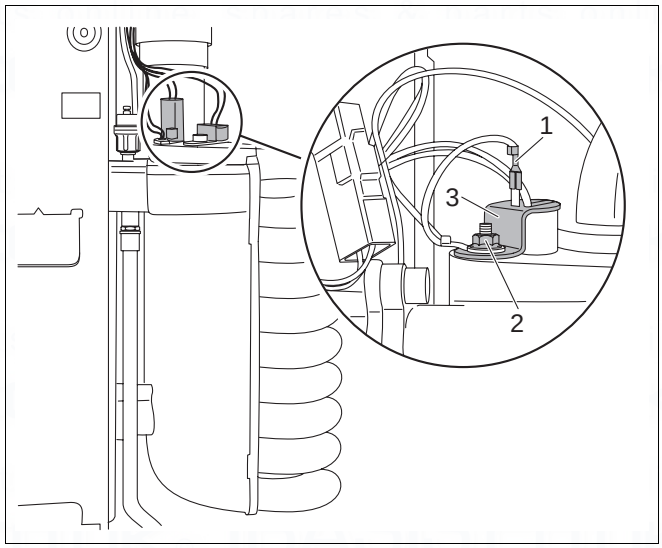

Fig. 74 Replacing the incandescent firing electrode

- Loosen crosshead screw on UBA housing.
- Swivel UBA housing downwards.
- Open the UBA housing.
- Unplug incandescent firing electrode connection cable from UBA housing (fig. 75).
- Loosen nut on clamp used to secure earth (ground) lead (fig. 74, item 2).
- Detach retaining plate of incandescent firing electrode (fig. 74, item 3) and remove incandescent firing electrode.

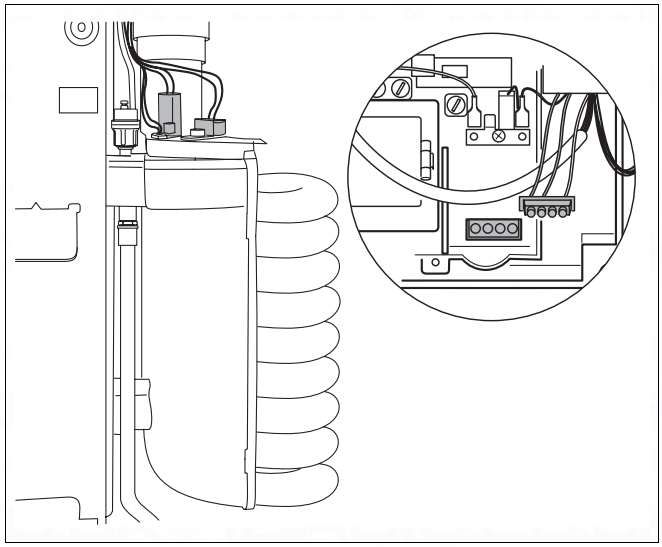

Fig. 75 Disconnect the plug-in cable from the UBA housing

3.1.26 Checking the gas-burner control system for correct activation

- Set the mains switch to “**0**”.
- Connect the multimeter (AC) to the plug-and-socket power-supply connection to the gas burner fitting.
- Turn the mains power switch to “**I**”.
- Set the chimney-sweep switch to “**I**”.
- Start up the device. Take a reading after about 30 seconds of running time.
- If the voltage reading is 24 V, the control system of the gas burner fitting is in order.
- When the test is complete, set the mains switch to “**0**”.

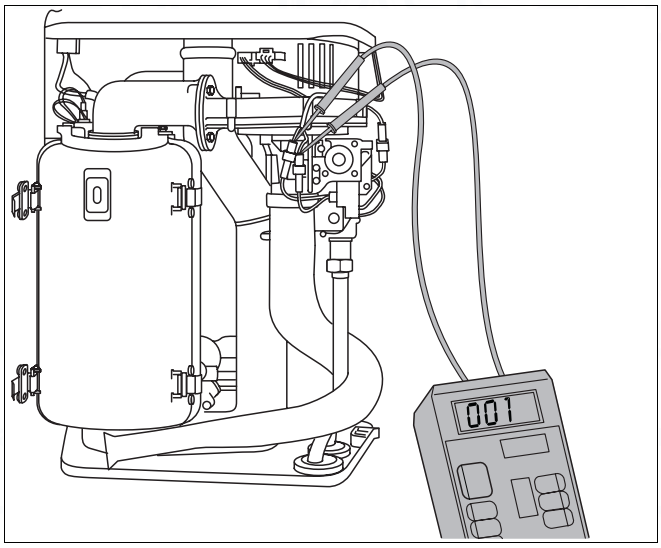

Fig. 76 600 Series 11S / 19S / 24S / 24C: Checking the gas-burner assembly for correct activation

3.1.27 Replacing the gas burner fitting

DANGER !
All work on the gas supply must be carried out by a CORGI registered engineer.

- Shut the gas cock.
- Disconnect the system from the power supply.
- Disconnect the fan using the plug and socket (fig. 77, item 1), loosen the UBA control line at the fan (fig. 77, item 2) and the gas burner fitting (fig. 77, item 3).
- Loosen the union nut (fig. 77, item 4) on the gas burner fitting.

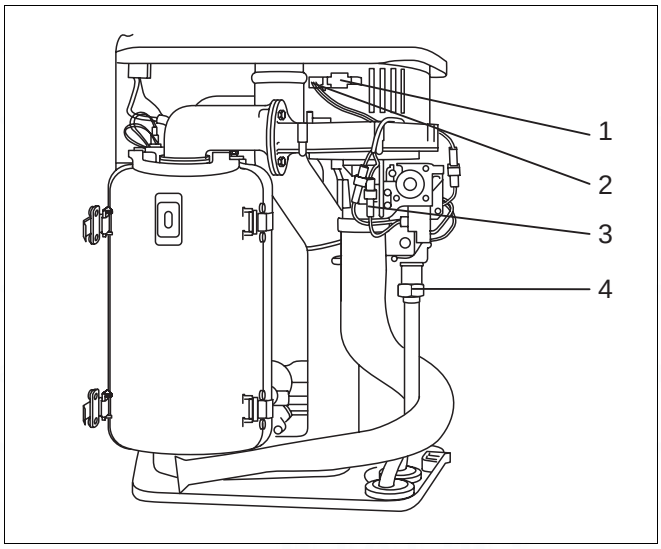

Fig. 77 Replacing the gas burner fitting on the 600 Series: Loosen plug and union nut

- Push the safety plate out of the way (fig. 78, item 1).
- Turn air suction tube and pull off from below.

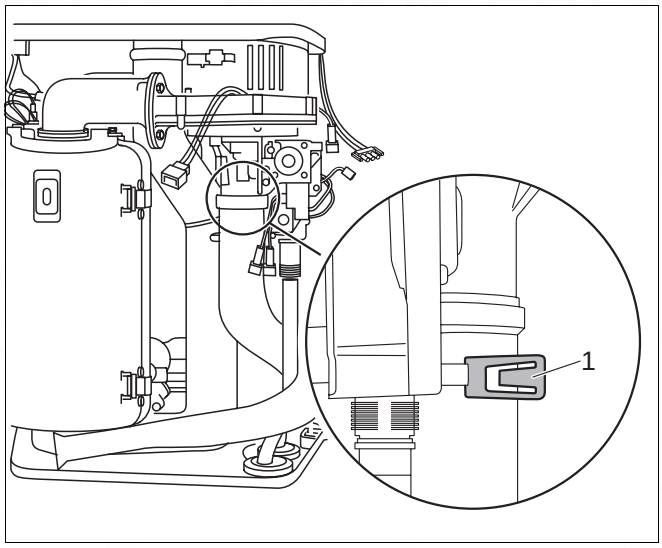

Fig. 78 Replacing the gas burner fitting on the 600 Series: Remove the air suction tube

- Swivel the "CombiVENT" gas combination unit forward (fig. 79, item 1)
- Remove the "CombiVENT" gas combination unit from its bayonet connector and pull upwards to detach (fig. 79, item 2).

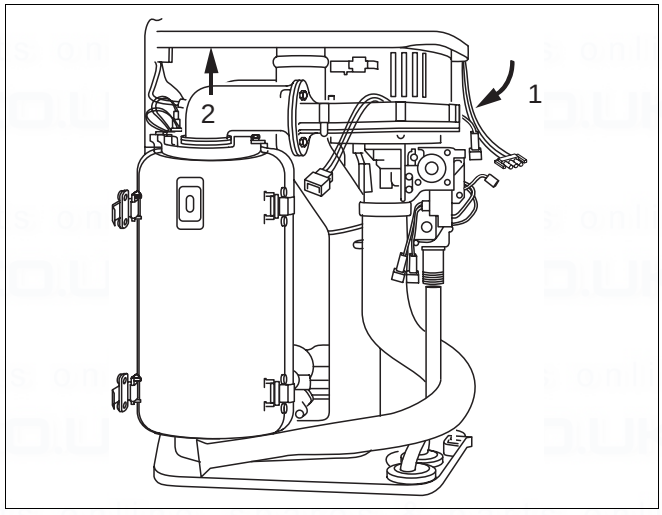

Fig. 79 Replacing the gas burner fitting on the 600 Series: Remove the gas connection unit

- Loosen the three screws (fig. 80).
- Screw the air suction tube safety plate into place (not supplied with new gas burner fitting).

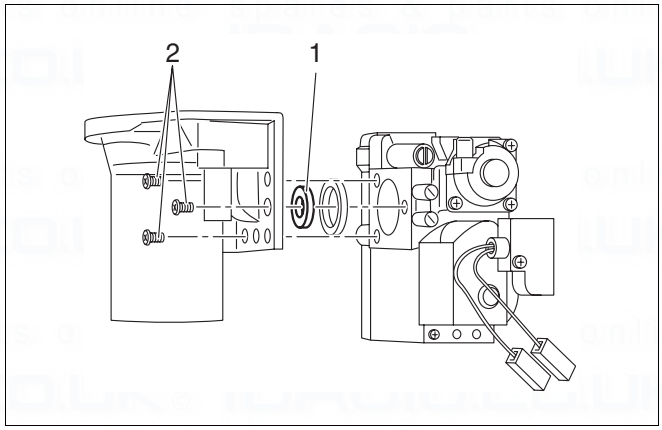

Fig. 80 Replacing the gas burner fitting on the 600 Series: Replace the gas burner fitting

3.1.28 Checking and adjusting the gas-to-air ratio

- Set mains switch (fig. 82, item 1) and chimney-sweep switch (fig. 82, item 3) to "**0**".
- Unscrew the sealing closure of the burner-pressure testing nipple by one turn (fig. 81).
- Set pressure gauge to zero.
- Connect the positive terminal of the pressure gauge with a hose to the burner pressure measuring nipple (fig. 81).

NOTE
The negative terminal of the pressure gauge MUST NOT be connected.

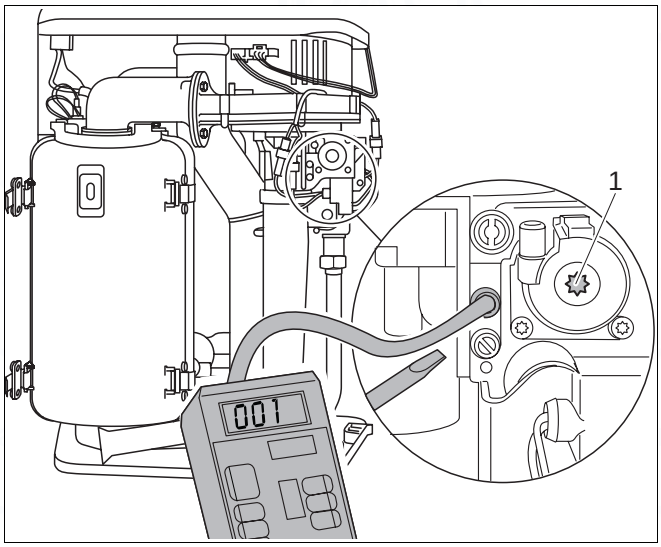

Fig. 81 Check the gas-air ratio

- Turn the mains power switch to "**I**" and the chimney-sweep switch to "**1**".
- When the burner has fired (after approx. 30 seconds), push the service button (fig. 82, item 2) and keep it pressed until "**Y**" is shown on the display.
- Set the heating-capacity controller (fig. 82, item 4) to "**1**".
- Read the differential pressure. The differential pressure ($p_{gas} - p_{air}$) must be -5 Pa (±5 Pa) (display on meter: -10 PA to 0 PA).
- In the event of any anomaly in the gas-to-air ratio, readjust at the setscrew (fig. 81, item 1).

NOTE
Remove the cover fixing screw before readjusting. The cover fixing screw must be secured before readings can be taken.

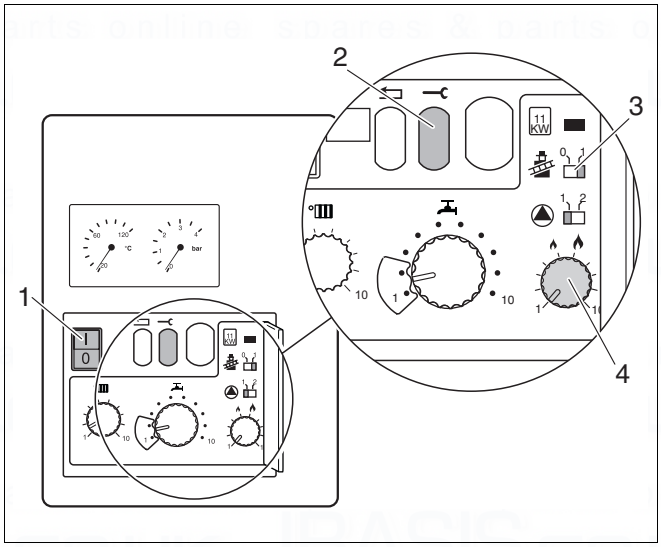

Fig. 82 Check the default gas-air ratio settings

- Turn mains power switch and chimney-sweep switch to "**0**".
- Remove the measuring equipment and retighten the screw in the burner-pressure measuring nipple.
- Readjust the heating capacity controller to its original (factory default) setting.
- Turn the mains power switch to "**I**".

3.1.29 Measuring the ionisation current

- Disconnect the system from the power supply.
- Loosen the plug-and-socket connector of the monitoring cable and connect the measuring device in series.
  Select the µA direct current range on the multimeter.
  The multimeter must have a resolution of at least 1 µA.
- Reconnect the system to the power supply and turn the chimney-sweep switch to “**1**”.
- Measure the ionisation current.
  The ionisation current must be > 2 µA DC.
- Enter the reading on the report form.
- Disconnect the system from the power supply.
- Remove the measuring device and restore the plug-and-socket connection to its original state.
- Turn the chimney-sweep switch to position “**0**”.
- Refit the cover for 2nd control level.
- Reconnect the system to the power supply. When the display shows “**7**”, press the service button to display “**c**”. Press the "reset" button. The display shows “**r**”.

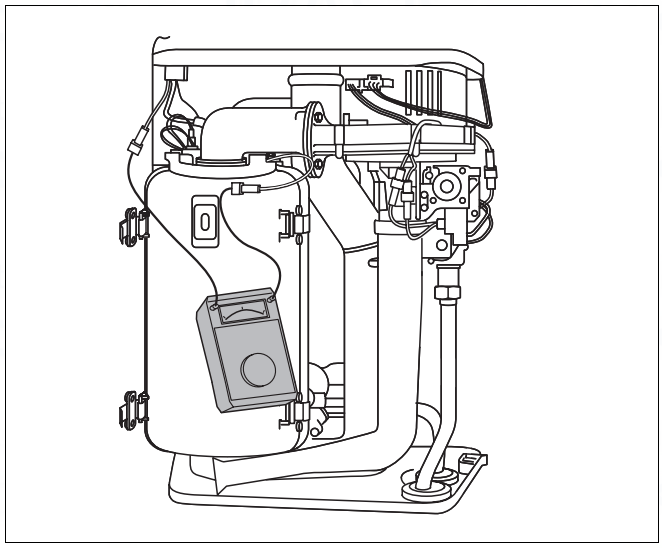

Fig. 83 Measuring the ionisation current

3.1.30 Replacing the ionisation electrode

- Remove the CombiVENT air combination unit as described in “Replacing the gas burner fitting” on page 60.
- Loosen the plug-and-socket connection of the ionization electrode.
- Loosen screw (fig. 84, item 1) by a half-turn and slide bar to remove.
- Pull electrode to remove, and fit new unit.
- Reassemble by following the above procedure in reverse.

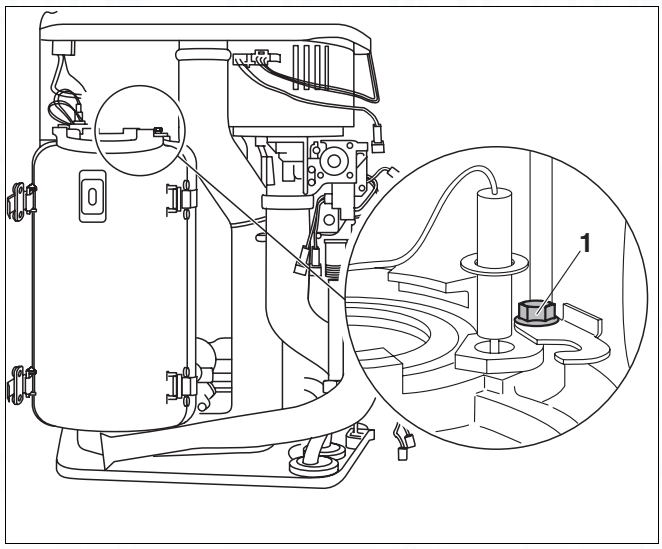

Fig. 84 Replacing the ionisation electrode

3.1.31 Checking the 3-way motorised valve for correct operation

- Disconnect the system from the power supply, set mains switch to "**0**".
- Dismantle discharge pipe.
- Remove protective cap from three-way valve.
- Remove bottom insulation from internal hot-water reservoir (applies to GB122-24K only).
- Push in catch on regulating motor and
- remove bayonet connector by twisting anticlockwise.
- Remove regulating motor.
- Set the mains switch to “**I**” and press the “reset” button.
- Once the 600 Series 11S / 19S / 24S / 24C is in operation, open one of the hot-water taps.
  The UBA displays " ⁼. " for hot water. If the regulating motor starts up (check for movement of adjusting lever), the motorised head is working.
- Shut the hot-water tap.
- Set the mains switch to “**0**”.
- If the motorised head is working, attach the regulating motor and lock into place by twisting the bayonet connector.
- Connect the system to the power supply, set the mains switch to “**I**” and press the “reset” button.

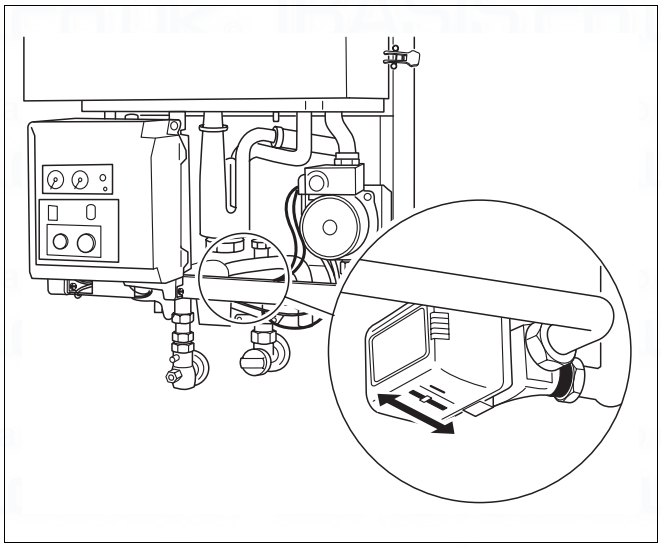

Fig. 85 600 Series 11S / 19S / 24S / 24C: Checking the motorised head for correct activation

3.1.32 Replacing the motorised valve body control valve

- Shut the servicing cock and drain the 600 Series 11S / 19S / 24S / 24C as per the "Installation and Servicing Instructions".
- Dismantle discharge pipe.
- Remove protective cap from three-way valve.
- Remove bottom insulation from internal hot-water reservoir (applies to 600 Serie 24 C only).
- Push in catch on regulating motor and remove bayonet connector by twisting anticlockwise.
- Remove regulating motor.
- Remove the control valve with a spanner and fit a new unit (fig. 86).
- Fit regulating motor and lock into place by twisting the bayonet connector.
- Reconnect the cable plug.

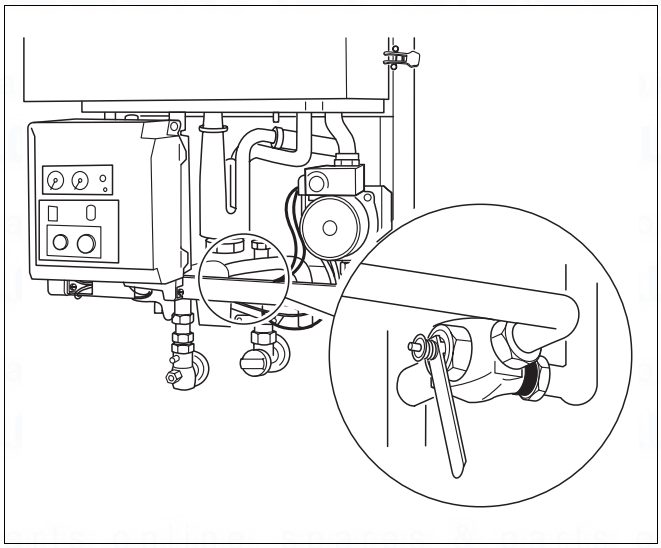

Fig. 86 600 Series 11S / 19S / 24S / 24C: Replacing the control valve

NOTE
Open servicing cocks, fill the 600 Series 11S / 19S / 24S / 24C and purge the system of air as indicated in the installation and servicing instructions.

- Set the mains switch to “**I**” and press the “reset” button.

3.1.33 Replacing the three-way valve

NOTE
Replace the three-way valve only if leaking occurs on the screw-in pipe connectors.
A: Mains water, **B**: Heating,
AB: Boiler feed line

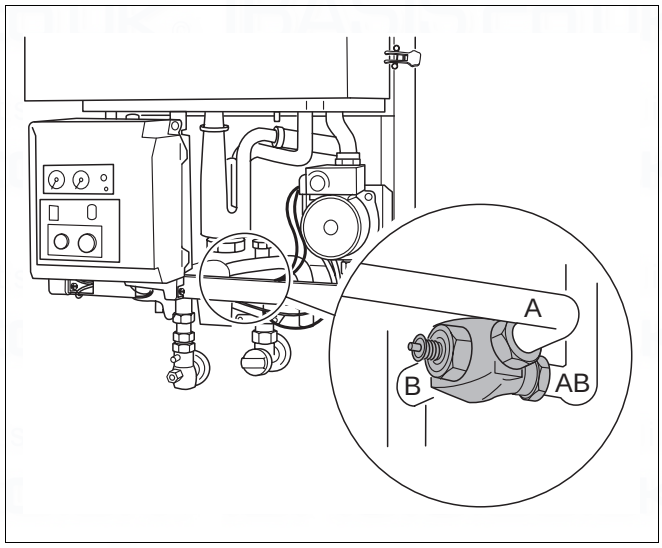

Fig. 87 600 Series 11S / 19S / 24S / 24C: Replacing the three-way valve

- Shut the servicing cock and drain the 600 Series 11S / 19S / 24S / 24C as per the "Installation and Servicing Instructions".
- Dismantle discharge pipe.
- Remove protective cap from three-way valve.
- Remove bottom insulation from internal hot-water reservoir (applies to 600 serie 24 C only).
- Push in catch on motorised valve head and remove bayonet connector by twisting anticlockwise.
- Remove motorised head.
- Loosen the 3 compression nuts (fig. 87).
- Remove three-way valve and fit new unit.
- Tighten the 3 compression nuts.
- Fit motorised valve head and lock into place by twisting the bayonet connector.
- Reconnect the cable plug.

NOTE
Open servicing cocks, fill the 600 Series 11S / 19S / 24S / 24C and purge the system of air as indicated in the installation and servicing instructions.

- Connect the system to the power supply, set the mains switch to “**I**” and press the “reset” button.

3.1.34 Checking the ERC/RC connections to the UBA

- Disconnect the system from the power supply.
- Loosen crosshead screw on UBA housing.
- Swivel the UBA housing downwards (fig. 88).
- Push in UBA housing on left-hand side and open to the right (fig. 89).
- Check to ensure that ERC or RC are correctly connected to 3 and 4.
- Terminals 1 and 2 should not be wired in any way. The unit is supplied with a dummy connector between terminals 1 and 2 (fig. 90). The DC voltage at terminals 3 and 4 should be approx. 11.5 V. If this is not so, the UBA or the cable harness is defective.

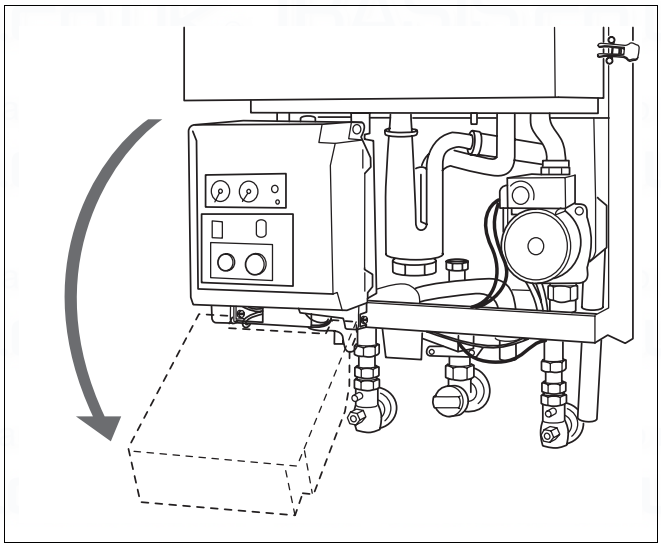

Fig. 88 Swivel UBA housing downwards

- Shut the UBA housing once more.
- Swivel the UBA housing upwards and screw into place.
- Connect system to mains power supply.
- Set the mains switch to “**I**” and press the “reset” button.

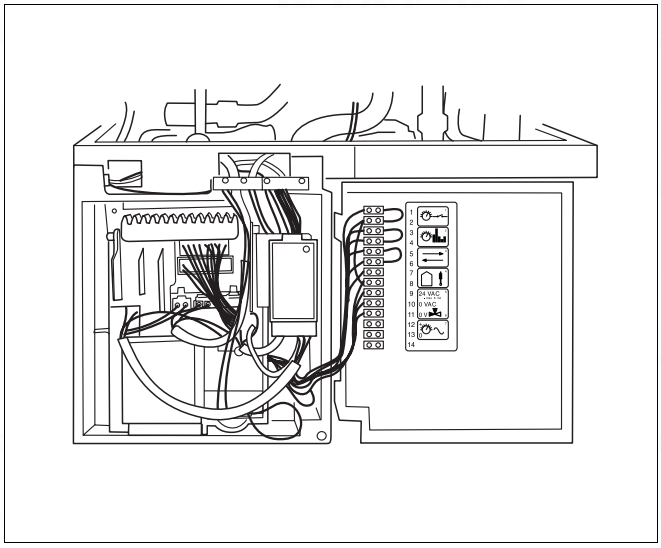

Fig. 89 Opening the UBA housing

3.1.35 Replacing the terminal strip

- Note order of cable terminals. Loosen all cables.
- Connect the cables, in the right order, to the new terminal strip.

3.1.36 Checking connections at the ERC or RC

- Check contact link between cable and ERC or RC.
- There should be a DC voltage of approx. 11.5 V at the ERC or RC.

NOTE
It is possible, in order to limit the source of errors, to disconnect the ERC or RC from the boiler (bridge required at 3 and 4) and to install a conductor bridge at 1 and 2 (fig. 90).
The heating and hot-water requirement is then passed via the potentiometer setting of the UBA.

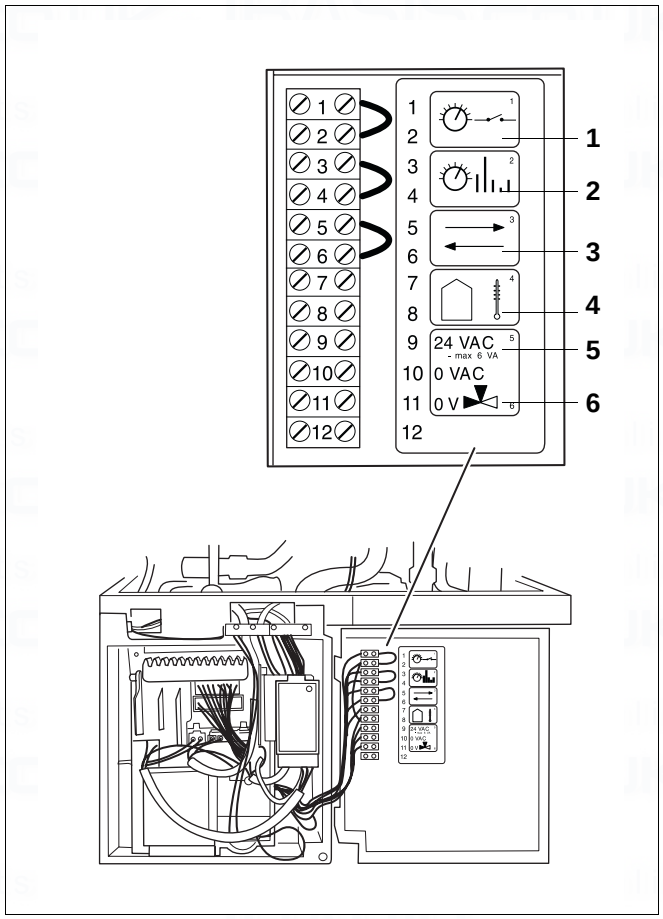

Fig. 90 Checking the controller-device connections at the boiler

Key to control-device connections:

Item 1: ON/OFF temperature controller

Item 2: Mod. room temperature controller (digital) ERC / RC

Item 3: I/O port / communication port

Item 4: Outdoor-temperature sensor

Item 5: Power supply 24 VAC/max. 6 VA

Item 6: Turn-on voltage for three-way valve (9+11)

3.1.37 Replacing the room-temperature control device

- Note order of cable terminals. Loosen all cables.
- Attach cables, in the right order, to the new room-temperature control device.
- Carry out the corresponding adjustment settings on the room-temperature control device.

Heating system specialist:

Boulter Buderus Ltd.
Magnet House
Whitehouse Road
Ipswich
Suffolk, IP1 5JA
http://www.boulter-boilers.com

721.013A - 3593 - 12/2002

spares & parts online IBASIS.co.uk

Users manual

Wall-mounted condensing gas boiler

600 - 11S / 19S / 24S / 24C

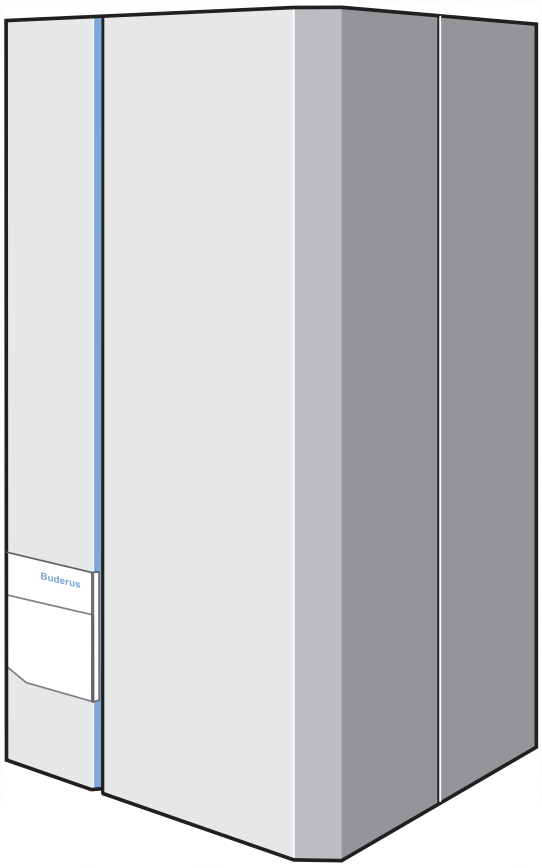

Buderus

Preface

Introduction

Please read these instructions and follow them carefully for a safe and economical use of your boiler.

Important general instructions for use

This device should only be used for its intended purpose and in accordance with the operating instructions.
It is the law and in your own interest, and that of safety that this boiler must be installed by a CORGI registered installer, in accordance with the relevant requirements of the current Gas Safety (Installation and Use) Regulations, The Building Regulations, current I.E.E. Wiring Regulations and the relevant British Standard Codes of Practice.

The device may only be used in combination with the units, accessories and spare parts listed in the installation and servicing instructions.
Other combinations of units, accessories and consumables are only to be used if they completely fulfil the specifications involved, and if system performance and safety are not affected in any way.

Subject to technical modifications

As a result of our policy of constant development, there may be small differences with respect to illustrations, functional steps and technical data.

Cleaning

For normal cleaning simply dust with a dry cloth.

To remove stubborn marks and stains, wipe with a damp cloth and finish off with a dry cloth.

DO NOT use abrasive cleaning materials.

Dear Customer,

Your Buderus **600 Series** wall-mounted condensing gas boiler has been designed and built in accordance with state-of-the-art technological standards and the recognised safety rules. Special focus has been placed on operator convenience in this respect.

Carefully read the safety instructions and operating manual to ensure safe, economic and ecologically beneficial use of the unit.

Due to the high efficiency of the boiler a plume of water vapour may form at the terminal during operation.
This is normal.

1 Safety precautions

DANGER!
If you smell gas:

1. **No naked flames ! Do not smoke !**
2. **Avoid sparks !**
   Do not operate electrical switches.
   Do not use the telephone, plug-in devices of any kind or the doorbell!
3. **Shut off the main gas supply!**
4. **Open windows and doors!**
5. **Warn building occupants and evacuate the building!**
6. **Call TRANSCO (under 'GAS' in the telephone directory) from outside the building!**

NOTE
In the event of any other type of incident, shut off the main gas supply and electric supply to the appliance and seek assistance from a CORGI registered engineer.

2 Installation area / boiler room

DANGER!
The air intake and outlet openings must not be reduced in size or closed.

DANGER!
Do not store or use inflammable materials or liquids near the heating boiler.

NOTE
To prevent the boiler from being damaged, care must be taken not to contaminate the combustion air with halogenated hydrocarbons (e. g. contained in aerosol sprays, solvents, detergents, paints, and adhesives), or with high quantities of dust. The room in which the boiler is installed must be frost-proof and be well ventilated.

3 Working in the heating system

DANGER !
Only a CORGI registered Engineer is to be entrusted with the installation of this boiler, the gas supply and the flue connection.
Commissioning, Servicing and any Repairs must be carried out by a competent person i.e.: a CORGI Registered Engineer.
All CORGI Registered Installers carry a CORGI identification card and have a registration number. Both should be recorded in your boiler logbook. You can check your installer/Engineer is registered by telephoning 01256 372300 or by writing to:
CORGI, 1 Elmwood, Chineham Business Park, Crockford Lane, Basingstoke. RG24 8WG

NOTE
It is mandatory to clean and service the system once a year ! This includes an inspection of the entire system to see if it is in full working order. Any faults and defects found in the course of inspection must be rectified immediately.

It is recommended to enter into a service contract with a specialist company.

4 Functions of the system and operating instructions

The installer should familiarize the user with the functions and operation of the heating system and ensure that a complete set of technical documentation is supplied.

5 Maintenance

The appliance should be serviced at least once a year by a CORGI registered installer.

6 Initial start-up

6.1 Preparing for operation

Please note also the operating instructions supplied with the control unit.

6.1.1 Check water pressure

- Open the control panel cover.
- Check the water pressure (fig. 1, item 1).
  Optimum filling pressure is 1.0 to 1.2 bar, max. water pressure is 1.5 bar.

If pressure is below 1.0 bar, proceed as described in “Topping up the heating system”, otherwise continue as described in Section 6.1.3 “Temperature-setting adjustments”.

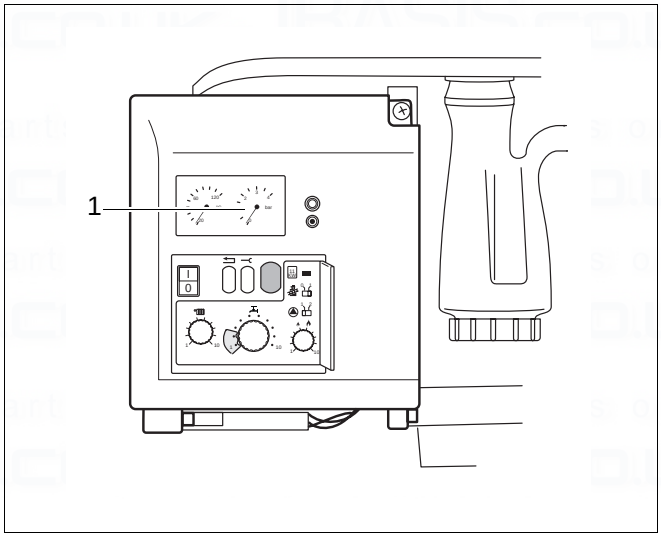

Fig. 1 Pressure display

Topping up the heating system

WARNING!
The wall-mounted condensing gas boiler must not be activated at this stage.

The system should be filled with untreated mains water.

- Set three-way valve to the middle setting (applicable for 24C only). This is done by pushing the lever on the three-way valve (fig. 2) with a screwdriver to the middle setting.

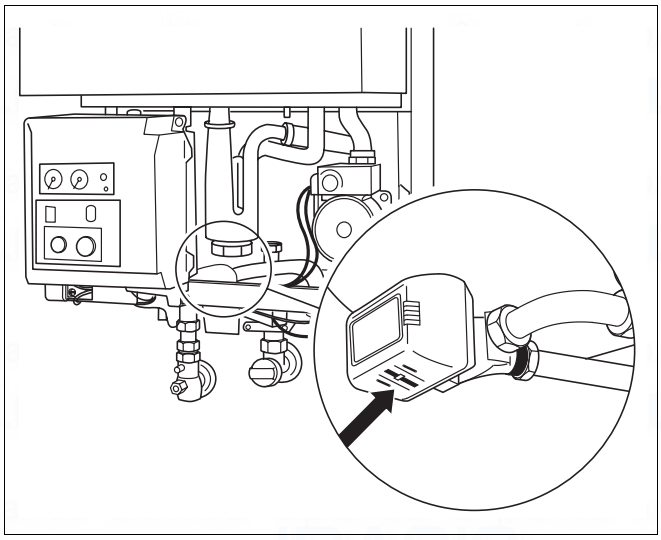

Fig. 2 Three-way valve

- If necessary open the CH flow and CH return maintenance valves (fig. 3, item 1 and 2).

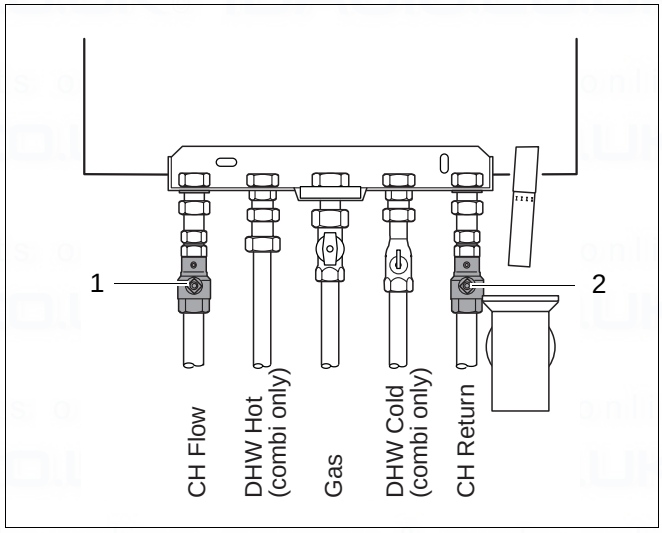

Fig. 3 Maintenance shutoff valves

- Connect temporary hose (fig. 4).
- Open both stop valves.

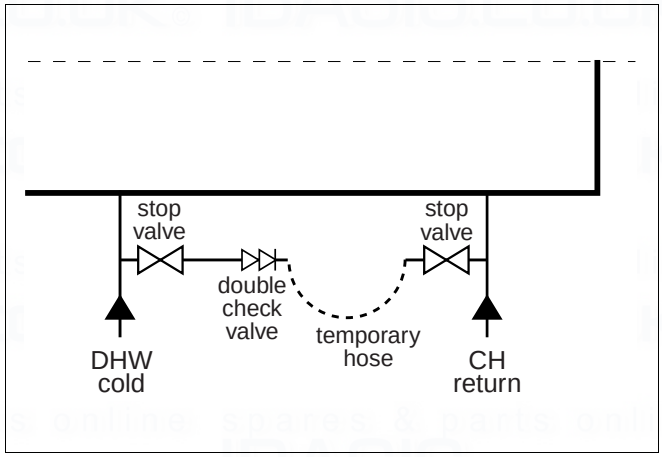

Fig. 4 Connecting temporary hose

- Fill the system to a pressure of 1.0 to 1.2 bar (fig. 5, item 1). Max. water pressure is 1.5 bar.
- Shut both stop valves and disconnect the filling loop.

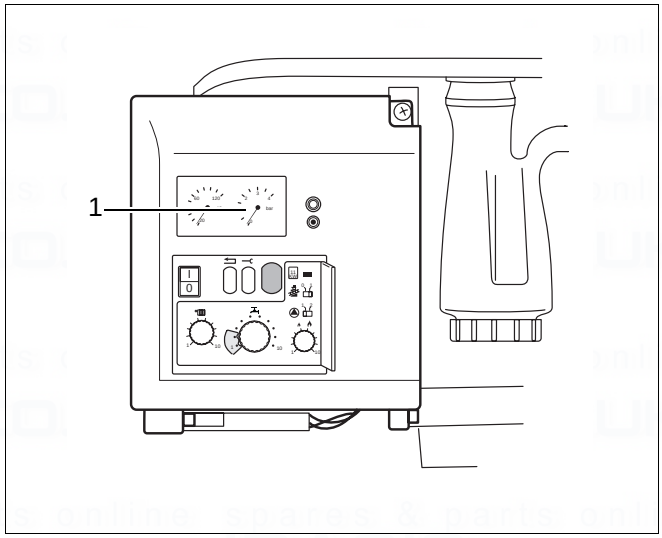

Fig. 5 Pressure display

6.1.2 Purging the heating-water circuit

- Unscrew the four screws at the top and bottom of the ventilation cover (fig. 6, item 1) and remove the ventilation cover.

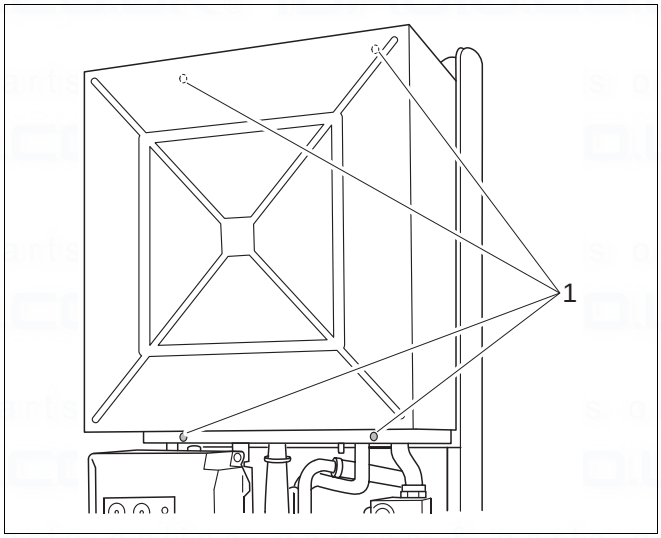

Fig. 6 Remove ventilation cover

- Open the cap on the automatic vent unit (fig. 7) by one turn to allow any residual air to escape.
- If the air purging operation causes the pressure to drop, top up with water.
- Refit the ventilation cover.
- Remove the hose from the filling and draining valve, unscrew the hose spigot and screw the cover cap back on.

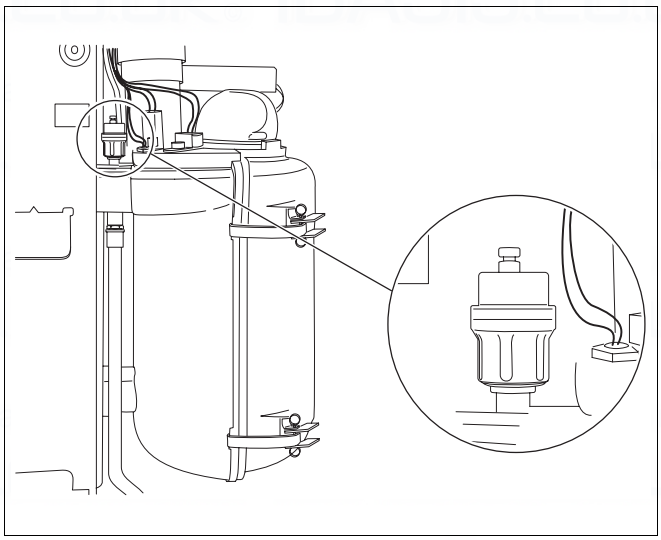

Fig. 7 Automatic air vent unit

- Purging the system at the radiator bleed-valves.

NOTE
If there are frequent water losses, have the system examined and repaired by a CORGI registered installer.
Have the inhibitor concentration checked every year.

6.1.3 Temperature-setting adjustments

- Set flow temperature at the control unit (fig. 8, item 6) (see table 1).
- Set hot-water temperature for 600 - 24 C with integrated hot-water supply at knob (fig. 8, item 3) (see table 2).
  For energy saving (no heat-retention function) move knob (fig. 8, item 3) to cold-start-setting "**1**".
  Set outlet temperature, at the same time, to 60 °C.
- Set hot-water temperature for 600 Series with external tank at control unit (fig. 8, item 3) using table 3.
- Adjust room temperature to maximum setting at the control unit.
- Open the gas service valve by pushing in and turning anticlockwise into a vertical position (fig. 8, item 4).
- Push the mains power switch (fig. 8, item 1) to "**I**". The boiler runs through the start-up programme and the burner is ignited after approx. 30 seconds.
- Adjust room temperature to desired setting at the control unit.

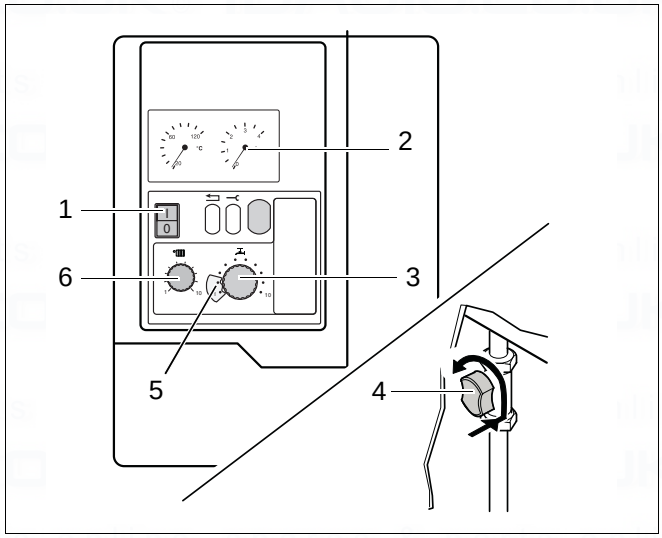

Fig. 8 Control panel, pressure display, gas service valve, temperature indicator

Control unit	Range of application	Controller position / boiler flow temperature
Buderus *i*RT30	Floor heating	3 (48 °C, max. factory-adjusted setting for floor heating)
	Radiator heating	7 (67 °C, min. factory-adjusted setting for radiator heating)
ON/OFF temperature controller, 24 V	Radiator heating	5 (58 °C, new building) up to 10 (80 °C, old building)*

* Basic setting: Have the specific system settings of the Buderus control system and burner-control unit control panel adjusted by a specialist heating system company.

Table 1 Flow temperature

Controller position	DWH-storage temperature [°C]	Outlet temperature [°C]
1	–	60
2	–	60
3	40	40
4	43	43
5	46	46
6	49	49
7	52	52
8	55	55
9	58	58
10	60	60

Tab. 2 Hot-water temperature for 600 - 24 C

Range of application	Controller position	Water temperature in external tanks
Minor convenience, small heat losses	1	27 °C
Average convenience, medium heat losses	5	41 °C
Optimum convenience, normal heat losses	10	60 °C

Table 3 Hot-water temperature in external tanks

6.2 Combustion fuels

Natural gas or propane.

6.3 Frost hazard for the heating system

In the event of any risk of the heating system freezing up:

- Open the control panel cover.
- Open cover for 2nd control box (fig. 9, item 1).
- Move switch to ▲ position "**2**" (pump post-purge period 24 h) (fig. 9, item 5).
- Shut cover for 2nd control box and control panel.

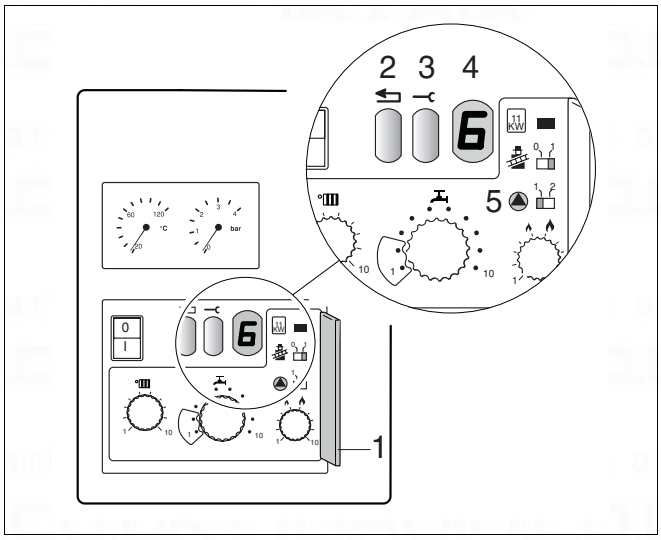

Fig. 9 2nd control box

6.4 Operational and fault codes (table 4)

Operating conditions and possible faults are shown on the display (fig. 10, item 4). The codes consists of two characters. Press the Service button (fig. 10, item 3) to display the second character.

All codes not contained in table 4 should be noted down separately. These are malfunctions that require the presence of a specialist technician.

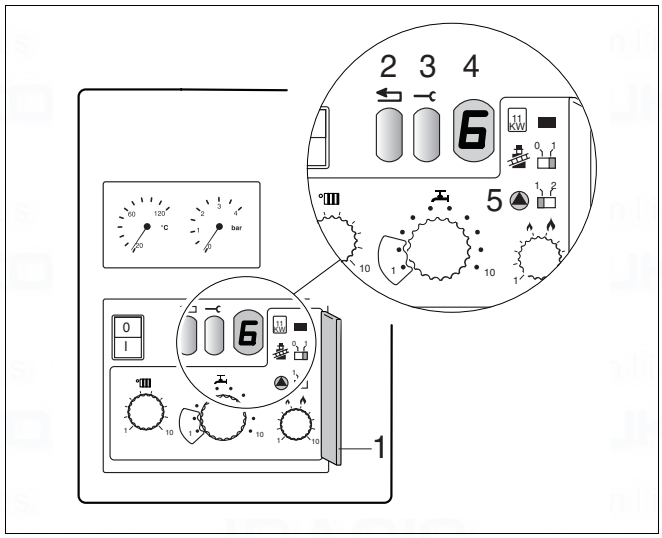

Fig. 10 Operational and fault codes

Display	Display after pressing the service button	Meaning	Rectification
0	A, H, L, P, U, Y	Boiler is ready for operation	
6*	A	Burner not ignited	Press reset button (fig. 10, item 2). If the burner fails to ignite after several unblocking operations, consult a specialist company.
-.	H	Normal heating mode	
=.	H	Normal hot water mode	

* Flashing after three start-up attempts.

Table 4 Operational and fault codes

7 Taking the system out of service

- Open the control panel cover.
- Push the mains power switch (fig. 11, item 1) to “**0**”.
- Close the gas service valve by turning it clockwise (fig. 11, item 2).
- Close the control panel cover.

Frost hazard for the heating system

- Turn the mains switch to “**I**” and leave the gas service valve open.
- Adjust room temperature to minimum (or frost-protection) setting at regulating device or on remote control unit.

NOTE
If you intend to shut down the system fully under frost hazard conditions, note that the system must be drained entirely of water.

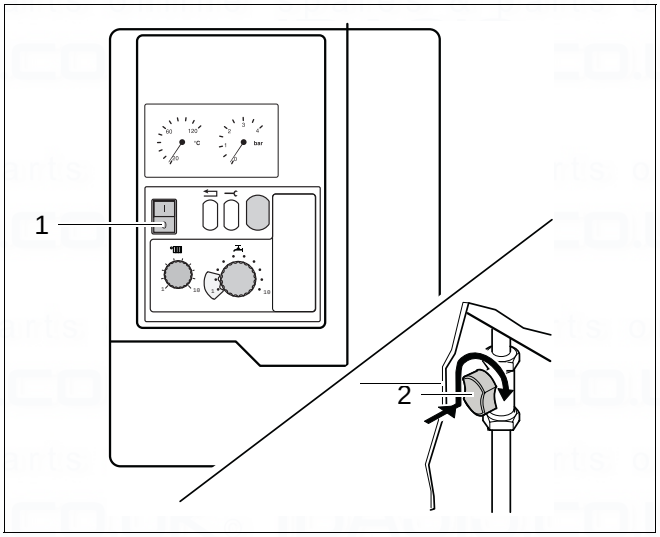

Fig. 11 Mains switch, gas service valve

7.1 Draining the system

- Close the DHW cold and the CH return valve.
- Connect temporary hose (fig. 12).
- Open the CH return stop valve to drain the system.

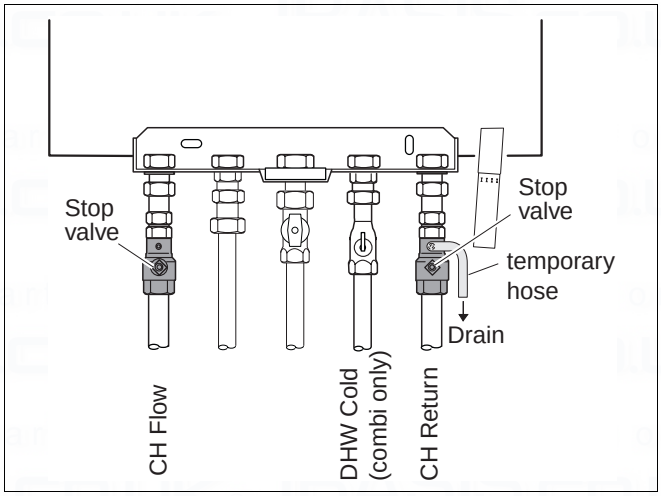

Fig. 12 Draining the system

Notes

spares & parts online IBASIS.CO.UK

Heating system specialist:

Boulter Buderus Ltd.
Magnet House
Whitehouse Road
Ipswich
Suffolk, IP1 5JA
http://www.boulter-boilers.com

720.968A - 3939 - 11/2003

spares & parts online IBASIS.CO.UK