Installation and servicing instructions

Gas wall hung Boiler condensing Buderus 600 - 28C

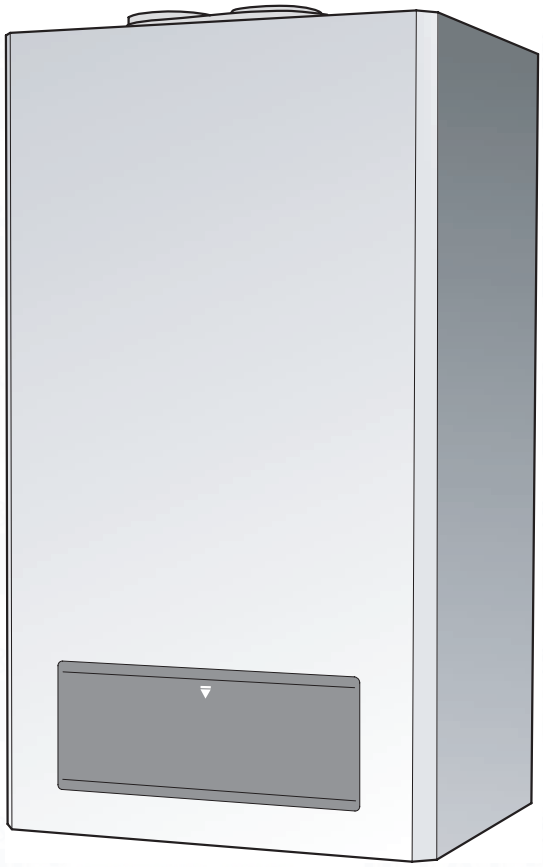

benchmark

Buderus

The boiler meets the basic requirements of the appropriate standards and directives.

Conformity has been substantiated by the proper documents which - together with the declaration of conformity - are filed with the manufacturer.

CE Declaration of Conformity

The design and operation of this product conform to European Directives and the supplementary national requirements.
Conformity is demonstrated by the CE designation.
You can view the Declaration of Conformity regarding this product on the internet at www.buderus.de/konfo or www.buderus.com or request a copy from your local Buderus sales office.

Subject to technical modifications!

Constant development efforts may result in minor deviations in illustrations, functional steps and technical data.

Updating the documentation

If you have suggestions for improvement or have found discrepancies, please do not hesitate to contact us.

Contents

1 Installation 6
1.1 Dimensions, connections and assembly 6
1.2 Boiler assembly - exploded view 7
1.3 Flue Installation 8
1.4 Items supplied with unit 10
1.5 Hanging the boiler 10
1.6 Water circulation system 11
1.7 Pipe connections 11
1.8 Flue installation 14
1.9 Electrical connections. 16
1.10 Wiring Diagram. 17
2 Initial start-up 21
2.1 Preparing the boiler for operation. 21
3 Inspection 31
3.1 General directions 31
3.2 Preparing the boiler for inspection 31
4 Maintenance 32
4.1 Cleaning the heat exchanger and burner 32
4.2 Cleaning the condensate trap 35
4.3 Flushing the hot water tank 36
5 Servicing 37
6 Appendix 63
6.3 Short list of spare parts 66

G. C. Apliance No. :

Buderus 600 - 28C 47-110-02

Preface

These installation and servicing instructions apply to:
Buderus gas wall hung boiler condensing 600 - 28C.

Model C_{13}, C_{33}, C_{53}

Type GB/IE II_{2H3P} 20 mbar, 37 mbar

In this document: NG = 2H-G20-20 mbar
LPG = 3P-G31-37 mbar

Power rating 230 VAC, 50 Hz, IPX4D

Fuse rating: 5 AF sand filled

Important general instructions for use

Only use the boiler in accordance with its designated use and the installation and servicing instructions. Servicing and repair must be carried out by CORGI registered installer. Only use the boiler in combinations and with the accessories and spare parts indicated in the installation and servicing instructions. Other combinations, accessories and consumables may only be used if they are expressly provided for the designated use and if system performance and safety are not affected in any way.

The boiler is suitable for connection to fully pumped, sealed water systems ONLY. Adequate arrangements for completely draining the system by provision of draining valves must be provided in the installation pipework.

Pipework from the boiler is routed downwards as standard, but may be routed upwards behind the boiler using the distance frame (supplied in a separate kit).

Subject to technical modifications.

As a result of our policy of constant development, there may be small differences between illustrations, functional steps and technical data.

BENCHMARK' Log Book

All Buderus gas fired boilers now include an installation, commissioning and service record log book.
The details of the log book will be required in the event of any warranty work being requested.
Please complete the appropriate sections on completion of the installation and commissioning.

REMEMBER: Please hand the log book back to the user.

Regulations and directives

It is law that all gas appliances are installed and serviced by a CORGI registered installer in accordance with the regulations. Failure to install appliances correctly could lead to prosecution. It is in your own interest, and that of safety, to ensure the law is complied with.

The installation must also be in accordance with the latest I.E.E (**BS.7671**) Wiring Regulations, water regulations, the building regulations and the Building Standards (Scotland) and any relevant requirements of the local authority.

It is a requirement and in your own interest, and that of safety that this boiler must be installed by a CORGI registered installer, in accordance with the relevant requirements of the current Gas Safety (Installation and Use) Regulations, The Building Regulations, current I.E.E. Wiring Regulations and the relevant British Standard Codes of Practise.

Detailed recommendations are contained in the following British Standard Codes of Practice:

BS. 5440:1	Flues (for gas appliances of rated input not exceeding 70 kW).
BS. 5440:2	Ventilation (for gas appliances of rated input not exceeding 70 kW).
BS. 5449	Forced circulation hot water systems.
BS. 5546	Installation of gas hot water supplies for domestic purposes (2nd. family Gases).
BS. 6798	Installation of gas fired hot water boilers of rated input not exceeding 60 kW.
BS. 6891	Low pressure installation pipes.
IGE/UP/1b	Tightness testing and purging domestic sized gas installations.

Health and & Safety Document No. 635.

The Electricity at Work Regulations, 1989.

The manufacturer's notes must not be taken, in any way, as overriding statutory obligations.

The design and construction of the Buderus gas wall hung boiler condensing 600 - 28C conforms to the basic specifications listed in the European directive governing gas-fired appliances 90/396/EEC, and with respect to EN 625, EN 483 and EN 677.

NOTE
Observe the corresponding technical rules and the building supervisory and statutory regulations when installing and operating the system.

WARNING!
Keep the burner-control unit housing CLOSED when working on water-bearing components.

NOTE
For optimum, long-term reliable functioning of the heating boiler, and in order to be able to claim under the terms of the manufacturer's warranty, the heating boiler must be inspected and maintained at least once a year (under normal operating conditions) by an officially recognized installation and service engineer. The term "normal operating conditions" means that the heating boiler is used to provide central heating and/or hot water to no more than one single-family dwelling.

In all other cases, the heating boiler must be inspected and maintained by an officially recognised installation service engineer every 2,500 burner operating hours.

NOTE
When instructions aren't followed, warranty expires.

Timber Framed Buildings

If the boiler is to be fitted in a timber framed building it should be fitted in accordance with the Institute of Gas Engineering document **IGE/UP/7:1998.**

Bathroom Installations

This appliance is rated IPX4D.

The boiler may be installed in any room or internal space, although particular attention is drawn to the requirements of the current IEE (**BS.7671**) Wiring Regulations and, in Scotland, the electrical provisions of the building regulations applicable in Scotland, with respect to the installation of the boiler in a room or internal space containing a bath or shower.

If the appliance is to be installed in a room containing a bath or shower then, providing water jets are not going to be used for cleaning purposes (as in communal baths/showers), the appliance can be installed in Zone 3, as detailed in **BS.7671**.

Compartment Installations

A compartment used to enclose the boiler should be designed and constructed especially for this purpose.

An existing cupboard or compartment may be used, provided that it is modified for the purpose.

In both cases, details of essential features of cupboard/ compartment design, including airing cupboard installation, are to conform to the following:
BS 6798 (No cupboard ventilation is required - see 'Air Supply' for details).

It is not necessary to have a purpose-provided air vent in the room or internal space in which the boiler is installed. Neither is it necessary to ventilate a cupboard or compartment in which the boiler is installed, due to the low surface temperatures of the boiler casing during operation; therefore the requirements of **BS 6798**, **Clause 12**, and **BS 5440:2** may be disregarded.

The position selected for installation MUST allow adequate space for servicing in front of the boiler.

For the minimum clearances required for safety and subsequent service, see the wall mounting template.
In addition, sufficient space may be required to allow lifting access to the wall mounting plate.

Gas wall hung boilers condensing must only be operated with the combustion air/flue gas systems especially devised and authorised for this type of boiler.

Observe the relevant standards, regulations and legislation of the country of final use.

CAUTION
Use this device for its intended purpose only.

DANGER!
Notes relating to the heating system water.

Thoroughly flush the system before it is filled with water. Use only untreated water or water treatment product such as Sentinel X100 to fill and top up the system.

When using water treatment, only products suitable for use with Buderus heat exchangers are permitted (e.g. Sentinel X100).
Your warranty is at risk if an incorrect water treatment product is used in conjunction with this appliance. For more information, contact Buderus Product Support Department.

It is most important that the correct concentration of the water treatment product is maintained in accordance with the manufacturer's instructions.

If the boiler is used in an existing system any unsuitable additives MUST be removed by thorough cleaning. **BS.7593:1992** details the steps necessary to clean a domestic central heating system.

In hard water areas, treatment to prevent lime scale may be necessary - however, the use of artificially softened water is NOT permitted.

Under no circumstances should the boiler be fired before the system has been thoroughly flushed.

Do not use water softened in a salt bedding exchanger.

Do not use inhibitors, anti-freeze or other additives.

The expansion vessel must be of sufficient size.

When oxygen-permeable pipes are used (e. g. for floor heating systems) the system must be separated by means of heat exchangers. Unsuitable heating water promotes sludge formation and corrosion. This may cause malfunctions and damage in the heat exchanger.

NOTE:
Notes relating to domestic hot water.

- The domestic hot water service must be in accordance with **BS 5546** and **BS 6700**.
- The boilers are suitable for connection to most types of washing machine and dishwasher appliances.
- When connecting to suitable showers, ensure that:
  a. The cold inlet to the boiler is fitted with an approved anti-vacuum or condensate trap non-return valve.
  b. Hot and cold water supplies to the shower are of equal pressure.
- Where the water hardness exceeds 150 mg/litre, it is recommended that a proprietary scale reducing device is fitted into the boiler cold supply with the requirements of the local water company.

CAUTION
Provision must be made to accommodate the expansion of DHW contained within the appliance, if a non-return valve is fitted to the DHW inlet, as detailed in **BS. 67989: §5.4.3**.

Safe handling of substances

Care should be taken when handling the boiler's insulation, which can cause irritation to the skin.

No asbestos, mercury or CFCs are included in any part of the boiler and its manufacture.

1 Installation

1.1 Dimensions, connections and assembly

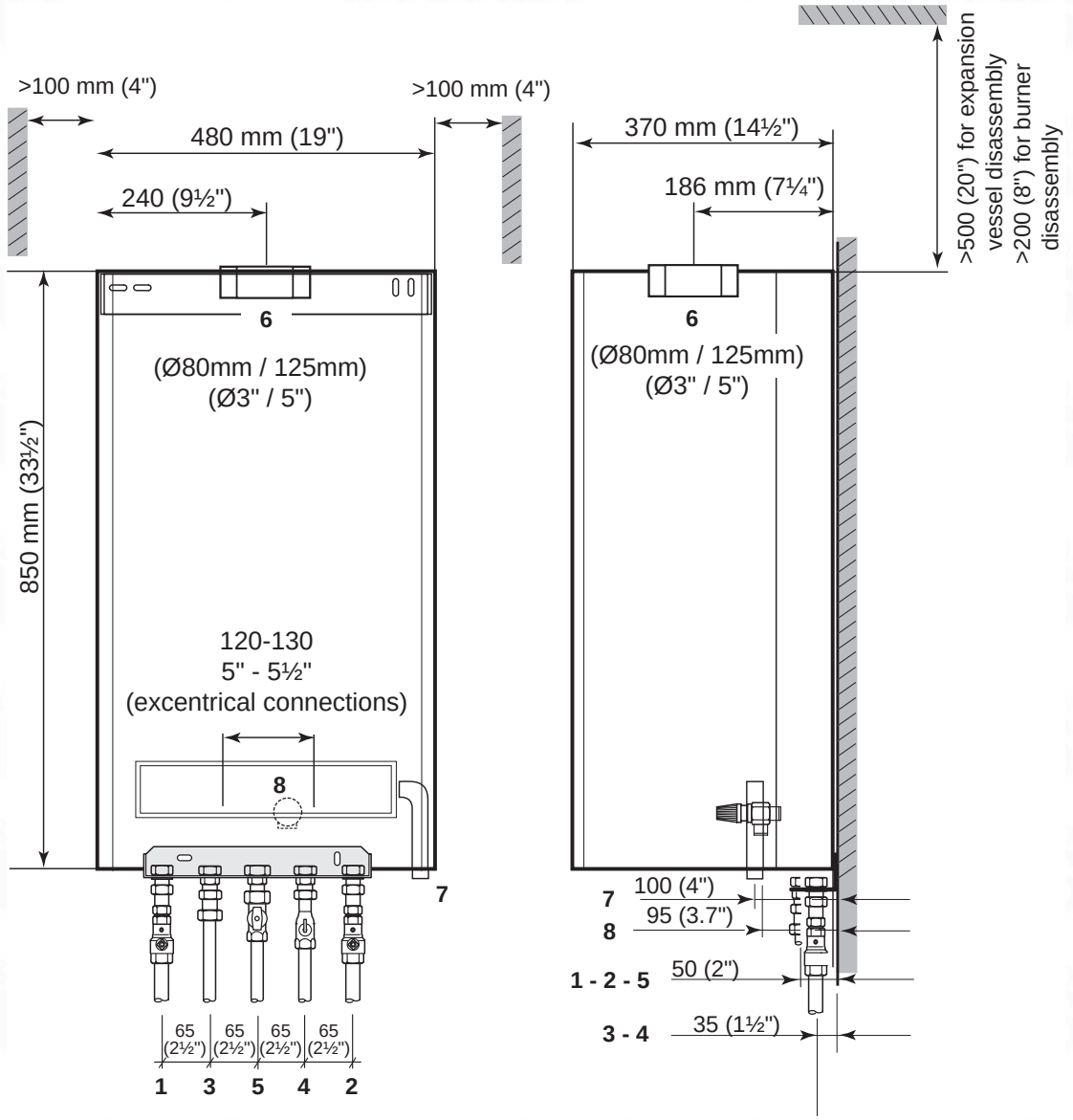

1. CH flow Ø 22 mm (compression fitting)
2. CH return Ø 22 mm (compression fitting)
3. DHW hot Ø 15 mm (compression fitting)
4. DHW cold Ø 15 mm (compression fitting)
5. Gas connection Ø 22 mm (compression fitting)
6. Air supply Ø 80 or Ø 125 mm socket
7. Condensate drain G1 "
8. Safety valve R¾" (¾"-½" adaptor supplied with boiler)

NOTE
See wall-mounting template for the necessary clearances.

1.2 Boiler assembly - exploded view

Combi unit (Buderus 600 - 28C)

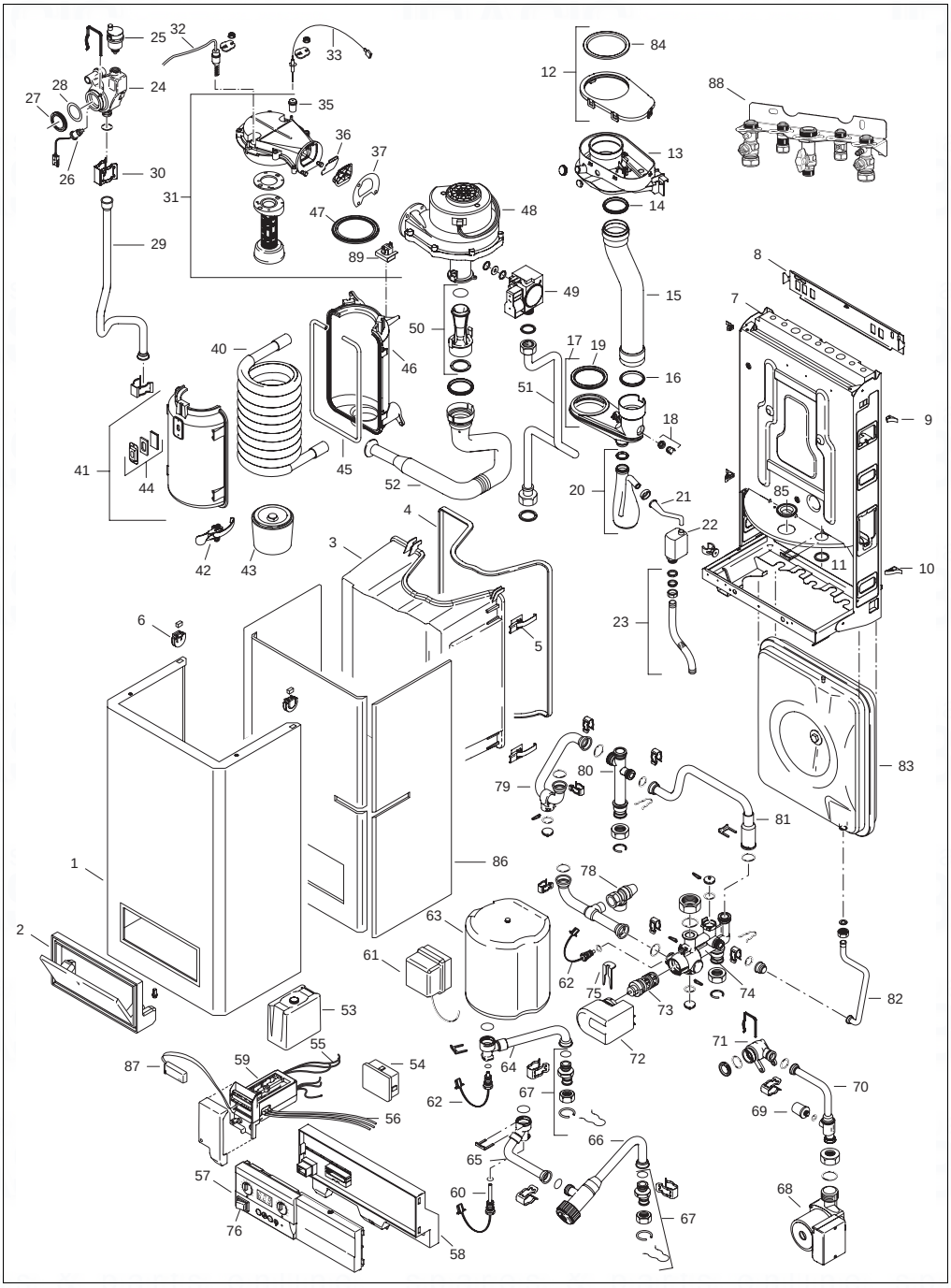

Legend

1. *Casing (incl. insulation)*
2. *Door control panel*
3. *Ventilation cover*
4. *Seal ventilation cover*
5. *Latches*
6. *Assembly casing block*
7. *Insulation frame*
8. *Bracket*
9. *Seal top*
10. *Seal bottom*
11. *Seal*
12. *Cover flue gas adaptor*
13. *Flue gas adaptor*
14. *Seal 60 mm*
15. *Exhaust pipe*
16. *Seal 60 mm*
17. *Condensate collector*
18. *Flue gas sensor*
19. *Seal exhaust pipe*
20. *Condensate trap*
21. *Drain pipe condensate trap*
22. *Syphon*
23. *Flex. drain pipe condensate trap*
24. *Flow connection piece*
25. *Automated air vent*
26. *Bi-sensor*
27. *Sealing*
28. *O-ring*
29. *Supply pipe*
30. *Clip*
31. *Service set GLE complete*
32. *Ignition unit*
33. *Ionisation electrode*
34. *Seal*
35. *Seal*
36. *Gas/air supply valve*
37. *Seal fan*
38. *Seal burner*
39. *–*
40. *Heat exchanger*
41. *Front panel heat exchanger*
42. *Latches*
43. *Divider combustion gas*
44. *Sight glass*
45. *Seal heat exchanger*
46. *Back panel heat exchanger*
47. *Seal heat exchanger / gas/air supply*
48. *Fan*
49. *Gas valve*
50. *Venturi 24 KW*
51. *Gas pipe*
52. *Suction pipe*
53. *UBA 3*
54. *Room control converter*
55. *Cable harness 24V*
56. *Cable harness 230V*
57. *BC10 mount*
58. *Backpanel mounting plate*
59. *Backpanel KIM*
60. *Sensor flow detection*
61. *Transformer*
62. *Sensor CH and outflow*
63. *Hot water tank*
64. *DHW pipe (hot)*
65. *DHW pipe (cold)*
66. *Hot water flow regulator*
67. *Connection assembly*
68. *Pump Uper 15-50-130*
69. *Pressure sensor*
70. *Return pump connection*
71. *Return connection*
72. *Actuator 3-way valve*
73. *Cartridge 3-way valve*
74. *3-way valve without actuator*
75. *Clip actuator*
76. *Power switch*
77. *Return pipe*
78. *Pressure relief valve*
79. *Sanitary supply pipe*
80. *Supply manifold*
81. *By-pass*
82. *Expansion vessel pipe*
83. *Expansion vessel*
84. *Seal 125 mm*
85. *Seal frame/condensate trap*
86. *Insulation casing*
87. *RCC connection box*
88. *Manifold assembly*
89. *Burner thermostat (if present)*

1.3 Flue Installation

1.3.1 Siting the flue terminal

The flue must be installed in accordance with the recommendations of **BS. 5440-1:2000**.

Pluming will occur at the terminal so terminal positions where this could cause a nuisance should be avoided.

The air supply and the flue gas exhaust must meet the applicable general regulations. Please consult the instructions provided with the flue terminal kits prior to installation.

The boiler MUST be installed so that the terminal is exposed to external air.

It is important that the position of the terminal allows the free passage of air at all times.

Minimum acceptable spacing from the terminal to obstructions and ventilation openings are specified in table 1.

If the terminal is fitted within 1000 mm of a plastic or painted gutter or within 500 mm of painted eaves, an aluminium shield of at least 1000 mm long should be fitted to the underside of the gutter or painted surface.

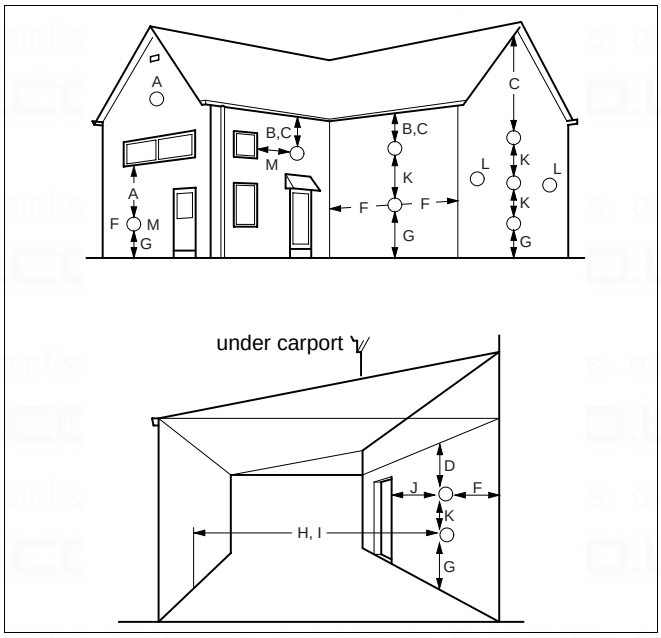

fig. 1 Flue terminal position

If the lowest part of the terminal is less than 2 metres above the level of the ground, balcony, flat roof or place to which any person has access, the terminal must be protected by a guard.

Ensure that the guard is fitted centrally.

The flue assembly shall be so placed or shielded as to prevent ignition or damage to any part of the building.

The air inlet/products outlet duct and the terminal of the boiler MUST NOT be closer than 25 mm (1") to combustible material. Detailed recommendations on the protection of combustible material are given in **BS. 5440-1:2000**.

NOTE
It is absolutely essential to ensure, in practice, that products of combustion discharging from the terminal cannot re-enter the building or any other adjacent building through ventilators, windows, doors, other sources of natural air infiltration, or forced ventilation/air-conditioning.

If this could occur the appliance MUST be turned off (with the owners permission), and labelled as unsafe until corrective action can be taken.

Terminal Position	Minimum Spacing
A. Directly below or alongside an opening window, air vent or other ventilation opening	300 mm (12")
B. Below guttering, drain pipes or soil pipes	75 mm (3")
C. Below eaves	200 mm (8")
D. Below balconies or a car port roof	200 mm (8")
E. From vertical drain pipes or soil pipes	150 mm (6")
F. From internal or external corners	300 mm (12")
G. Above adjacent ground, roof or balcony level	300 mm (12")
H. From a surface facing the terminal	600 mm (24")
I. From a terminal facing a terminal	1200 mm (48")
J. From an opening in a car port (e.g. door or window) into dwelling	1200 mm (48")
K. Vertically from a terminal on the same wall	1500 mm (60")
L. Horizontally from a terminal on the wall	300 mm (12")
M. Adjacent to opening	300 mm (12")

table 1 Balanced flue terminal position

1.3.2 Air supply and flue gas exhaust in a closed installation

A ventilation cover is integrated into the 600 Series condensing gas boilers. This cover houses a number of components, such as the burner and the heat exchanger. Since this ventilation cover is part of the air supply system, it is vital that it is always installed correctly.

To ensure optimal operation, the 600 Series appliances must be connected to a Buderus horizontal or vertical flue terminal. These terminals have been developed specifically for the 600 Series condensing gas boilers and have been comprehensively tested. The Buderus horizontal or vertical flue terminal kits ensure trouble-free operation.

Horizontal flue pack:

– **item 1**: 1 Flue turret 80/125 to 60/100 (NE 87603);

– **item 2**: 1 Horizontal flue terminal 60/100;

– **item 3**: 1 Flue finishing kit.

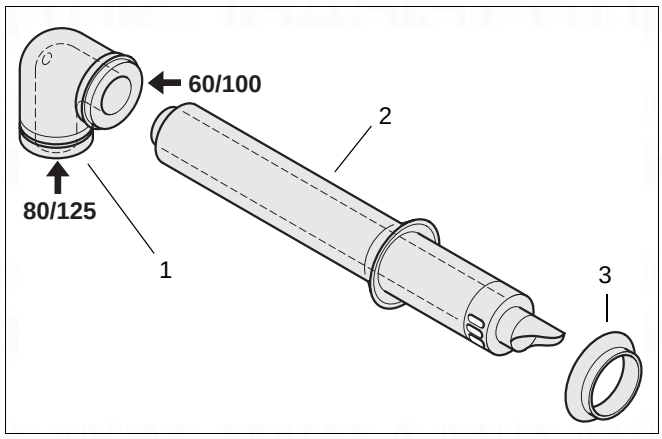

fig. 2 Horizontal flue pack

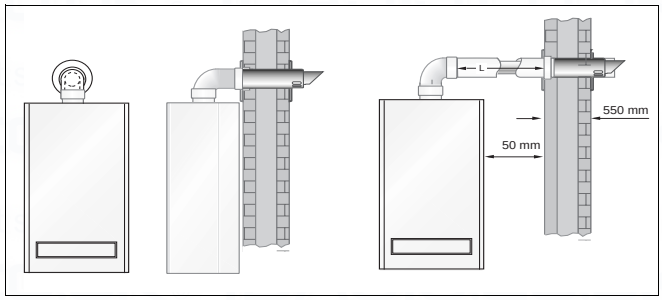

fig. 3 Side flue and rear flue installation

1.3.3 Maximum Flue length

The maximum pipe length of the air supply and flue gas exhaust pipes for the 600 Series condensing gas boilers (→ table 2) is determined by the total pressure loss of all components in the flue gas exhaust / air supply system.

Flow pressure available for use [Pa]	
Buderus 600 - 28C	**75**

Take the flue pipe clearances into account when planning the layout of the place of installation (→ subsection 1.3.1: "Siting the flue terminal" on page 8).

Maximum wall thickness without extensions is 550 mm. Maintain a minimum side of 100 mm (→ fig. 3).

Boiler Buderus 600 - 28C	Maximum pipe length	For every 90° bend the maximum pipe length has to be reduced by
for 60/100	L = 12.0 m	1.4 m
for 80/125	L = 20.0 m	1.4 m

table 2 Pipe length

1.3.4 Additional flue parts

Additional flue parts (→ table 3) can be ordered from your supplier.

Flue parts	Order No.
Concentric pipe, 500 mm long, adjustable, 60/100	NE 83703
Concentric pipe, 1000 mm long, not adjustable, 60/100	NE 83704
Concentric bend 90°, 60/100	NE 83705
Concentric bend 45°, 60/100	NE 83706
Vertical flue turret adaptor 80/125 to 60/100	

table 3 Additional flue parts

1.4 Items supplied with unit

- Check the contents against the packing list to ensure that nothing is missing.

Requirements to be met by the place of installation

NOTE
Observe all statutory building regulations applying to the place of installation.

DANGER!
Inflammable materials or liquids must not be stored or used near gas wall hung boilers condensing. The site of installation must be frost-protected.

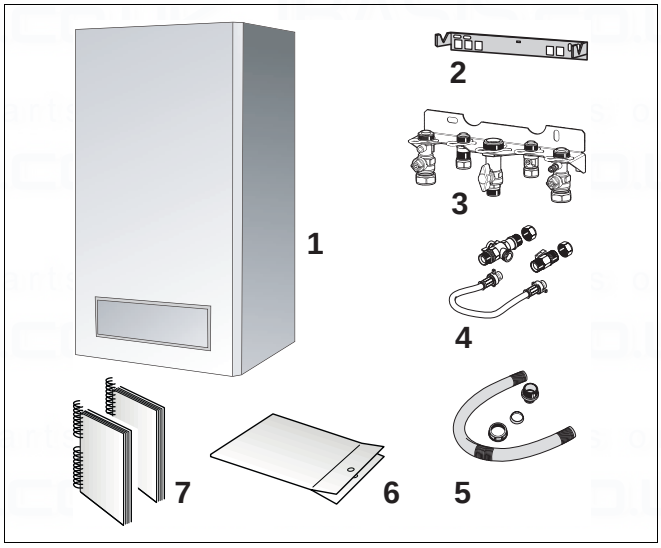

fig. 4 Items supplied with unit

Key to fig. 4:

1: *Gas wall hung boiler condensing*

2: *Wall bracket*

3: *Manifold assembly (located at top of boiler)*

4: *Filling loop*

5: *Condensate drain*

6: *Plastic bag containing the following accessories:*
2 x wall fixing screws
2 x wall plugs
2 x washers
Seals (1 x G½“ - 1“, 2 x ¾“ - 22 mm, 2 x ½“ - 15 mm)
Initial start-up sticker
Second identification plate
Safety valve nipple (from ¾“ to ½“)
Pressure meter

7: *Technical documents*

1.5 Hanging the boiler

CAUTION
DO NOT remove the polystyrene foam bottom slab protecting the connection nozzles.
During installation work, cover the gas wall hung boiler condensing and the flue gas adapter to prevent site dirt from entering, e. g. using aluminium foil.

- Attach the manifold assembly (located at top of boiler) to the wall (→ fig. 5, item 1).
- Attach the pipes.

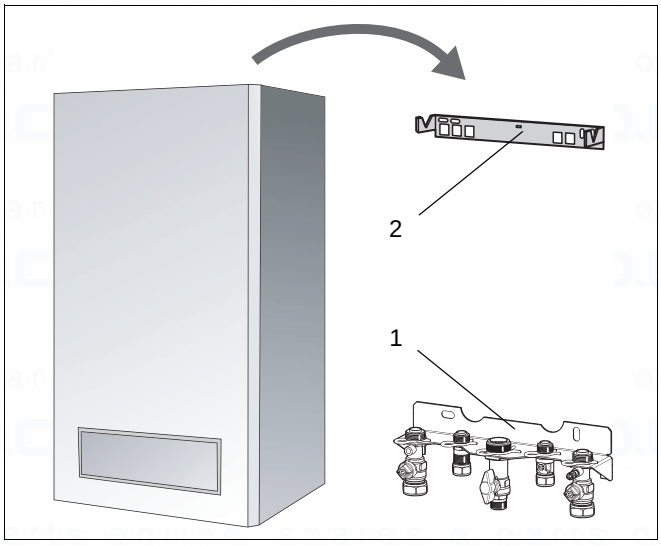

fig. 5 Installation

- Attach the wall bracket (→ fig. 5, item 2).
- When using a stand-off frame, refer to the manual of the stand-off frame for the correct mounting instructions.
- Loosen the retaining screw on the bottom of the condensing gas boiler (→ fig. 6, item 1).
- Detach the outer casing of the condensing gas boiler.
- Hang the condensing gas boiler onto the wall bracket (→ fig. 5).

NOTE
If the boiler isn't connected to the pipework immediately, place caps on the pipe connections.

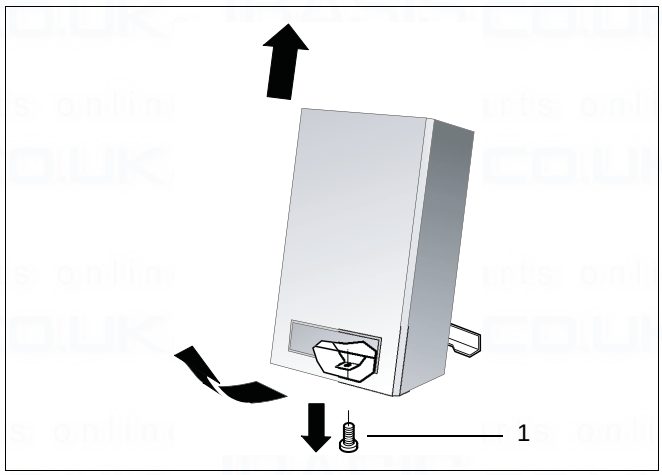

fig. 6 Remove outer casing

1.6 Water circulation system

The central heating system should be in accordance with **BS.6798** and, in addition, for smallbore and microbore systems, **BS.5449**.

1.7 Pipe connections

Pipework from the boiler is routed downwards as standard, but may be routed upwards behind the boiler using the stand-off frame (supplied in a separate kit).

- Connect pipes as shown in fig. 7. Ensure that all pipework is routed so as to minimise any strain on the boiler fittings.

1.7.1 Gas Supply

The gas installation must be installed in accordance with **BS6891**.

CAUTION!
Pipework from the meter to the boiler MUST be of adequate size.

The complete installation MUST be tested for gas tightness and purged as described in **IGE/UP/1b**.

1.7.2 Gas connection

- Connect to gas supply according to relevant standards, installing a screw-threaded gas shutoff valve (accessory) to the gas supply system.

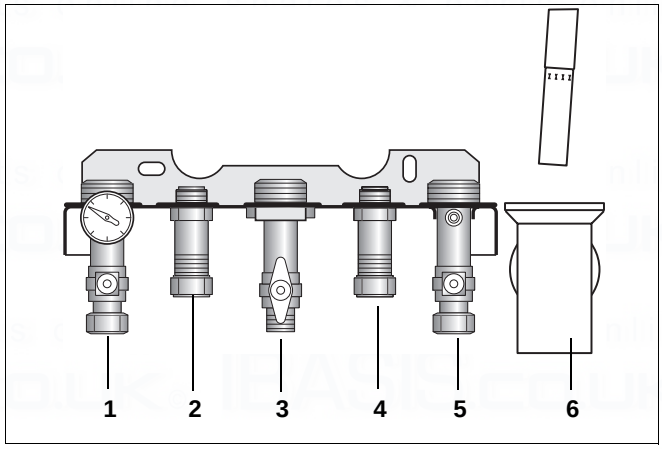

fig. 7 Pipe connections

Key to fig. 7:

1:	*CH flow*	***4:***	*DHW cold in*
2:	*DHW warm out*	***5:***	*CH return*
3:	*Gas*	***6:***	*Condensate trap*

1.7.3 Hot water temperature

CAUTION
DO NOT use galvanised pipes or fittings.
The hot water heat exchanger is made of copper and is liable to suffer the effects of electrolytic corrosion.

NOTE
When using plastic pipes, observe the supplier's instructions - especially those referring to recommended jointing techniques and the notes relating to the heating system water on page 5.

- Connect pipes free of tension (→ fig. 7).

1.7.4 Condensate drain

A condensate drain is integrated in the boiler.
The drain outlet is a standard (21.5 mm) overflow pipe.

- Assemble hose as shown in fig. 8.
- Screw the hose to the condensate trap as shown in fig. 9.
- Insert the end of the flexible hose to a drainage point.

All pipework and fittings in the condensate drainage system MUST be made of plastic - no other materials may be used.
The routing of the drain must be made to allow a minimum fall of 1 in 20 away from the boiler, throughout its length.
Excessive external pipe runs should be avoided in order to prevent possible freezing.
Any external pipework should be a minimum of 32 mm internal diameter.

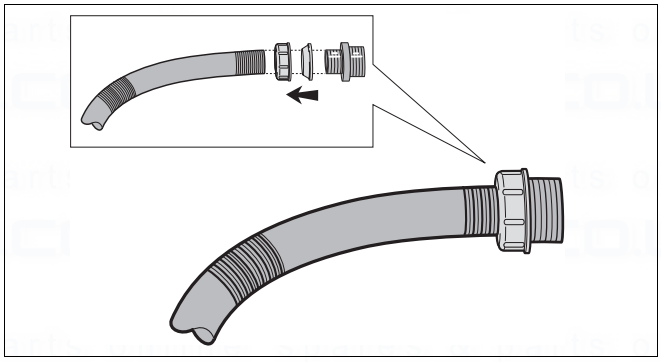

fig. 8 Hose assembly

WARNING!
Any external run must be insulated.

Ensure that the condensate trap is filled with water.

1.7.5 Condensate removal

Positioning and termination of the condensate drain pipe

The condensate pipe should be run and terminate internally to the house soil and vent stack or waste pipe. Alternatively, the condensate can be discharged into the rainwater system, or into a purpose-made soak away (condensate absorption point).

All connecting drainage pipework should have a fall of at least 2.5° to the horizontal, or approximately 50 mm per metre of pipe run.

If the drainage pipe has to be run externally, it is recommended that the pipe be insulated to protect against frost.

It should be noted that the connection of a condensate pipe to a drain may be subject to local building controls.

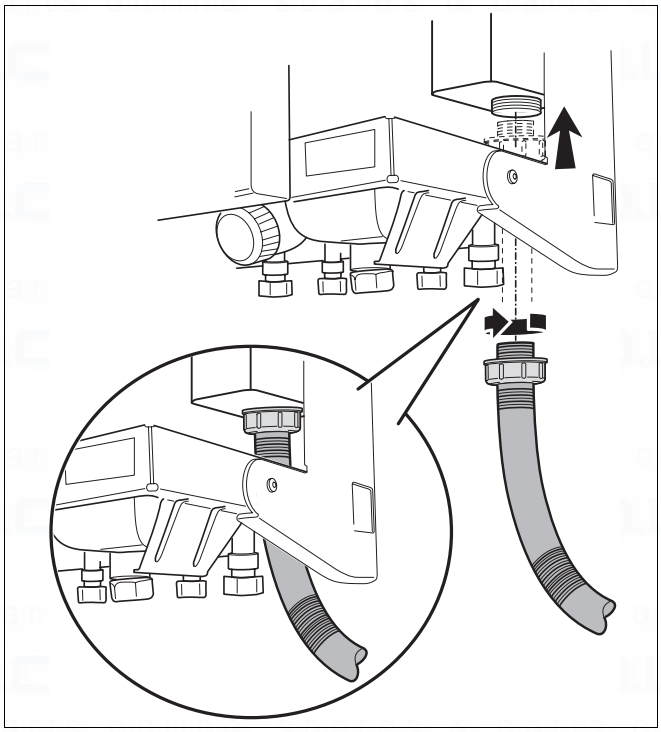

fig. 9 Hose connection

Material for condensate

The condensate drainage pipe should be run in a standard drain pipe material, e.g. PVC (polyvinyl chloride), PVC-U (unplasticized polyvinyl chloride), BS (acrylonitrile-butadienes-tyrene), PP (polypropylene polyprolene) or PVC-C (cross-linked polyvinyl chloride).

Any internal pipework should be of a diameter to match the requirements of the condensate exit pipe on the appliance. A 32 mm (1¼") waste pipe solvent weld fitting can be used, fitted externally over the condensate exit pipe on the appliance.
All external pipework should be kept to a minimum to avoid freezing and should have a diameter of not less than 22 mm.

Internal termination to internal stack

The condensate drainage pipe should have a minimum diameter of G1" outside connection with no length restriction. It should incorporate a trap with a 75 mm condensate seal and be connected to the stack at a point at least 450 mm above the invert of the stack. The trap built into the boiler will provide this 75 mm condensate seal. For all internal and external stack connections a second trap is required to prevent any odours emanating from the condensate air break at the boiler (→ fig. 10).

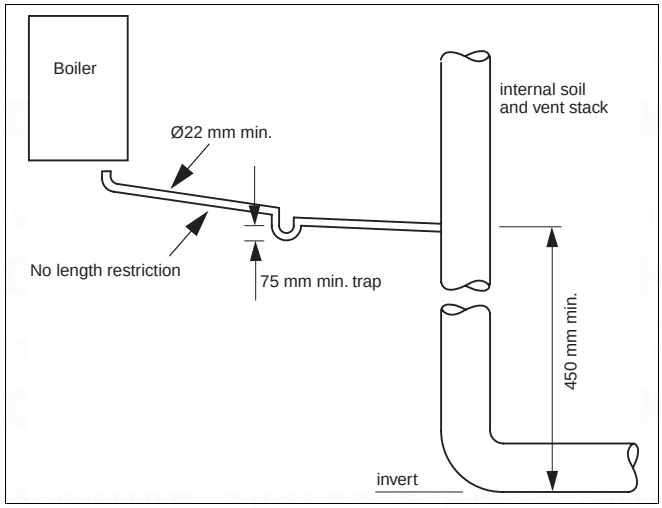

fig. 10 Internal termination of condensate drainage pipe to internal stack

External termination via internal branch (e.g. sink waste)

The condensate drainage pipe should have a minimum diameter of G1" outside connection with no length restriction and should incorporate a trap with a 75 mm seal. The connection should preferably be made downstream of the sink waste trap. If the connection is only possible upstream, then the air break is needed between the two traps. This is normally provided by the sink waste pipe (→ fig. 11 and fig. 12).

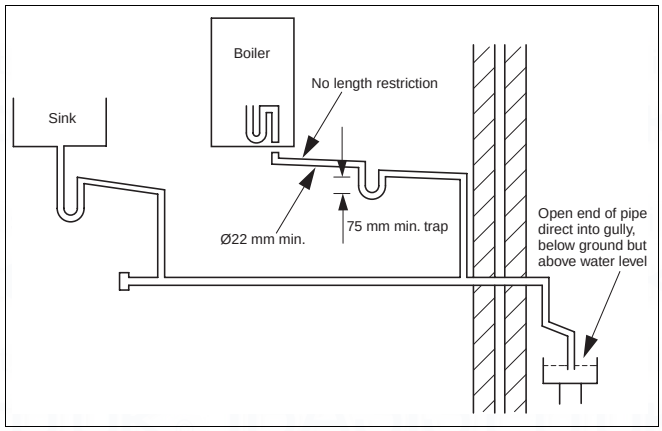

fig. 11 External termination of condensate drainage pipe via internal discharge branch (e.g. sink waste) and condensate trap

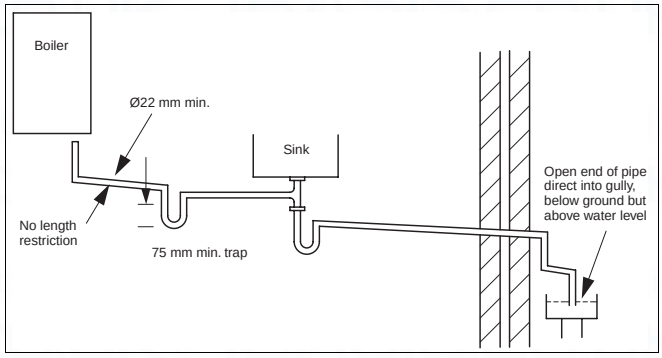

fig. 12 External termination of condensate drainage pipe via internal discharge branch (e.g. sink waste – proprietary fitting) and condensate trap

Condensate absorption point

The condensate drainage pipe should have a minimum diameter of G1" outside connection and the external pipe length should not be more than 3 m. The condensate absorption point should be sited in a convenient position as close as possible to the boiler but not in the vicinity of other services (→ fig. 13 for information).

NOTE
When discharging condensate to an outside drain caution must be taken to ensure blockage cannot occur during freezing conditions. If this is likely to occur, the use of a condensate trap is recommended.

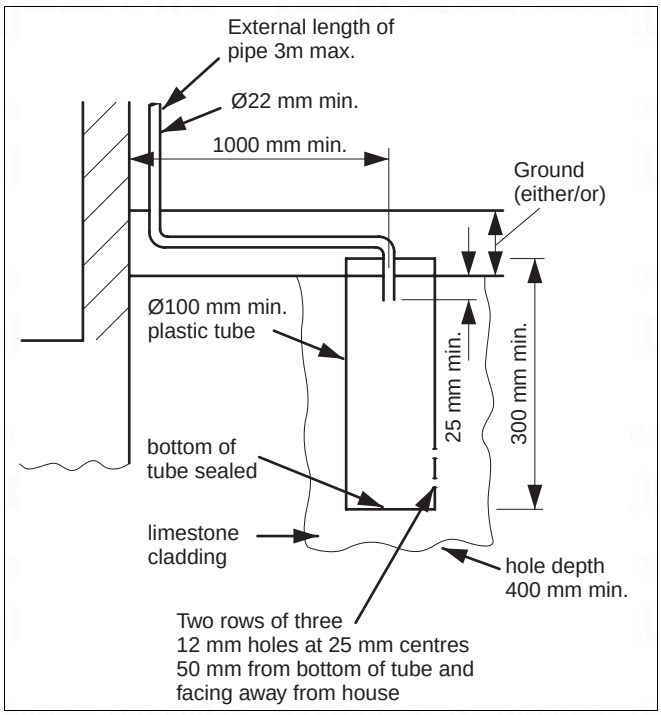

fig. 13 External termination of condensate drainage pipe to absorption point

1.8 Flue installation

The only flue systems that may be used are those supplied by Buderus. The flue system must be installed in accordance with the requirements of **BS5440:1. 2000**.

Standard 100 mm flue systems

The standard concentric flue system provides for a max. horizontal straight length of upto 12.0 m for 60/100 flue connection (→ subsection 1.3.3).
Full instructions for fitting this flue are in subsection 1.8.2: "Installation of the horizontal flue" on page 15.

IMPORTANT
Any horizontal flue system fitted to a condensing boiler must be incline towards the appliance at an angle of 3% (30 mm per metre length) to prevent condensate dripping from the flue terminal.
This means that the clearance above the appliance must be increased to match the duct length (→ figure on page 6).

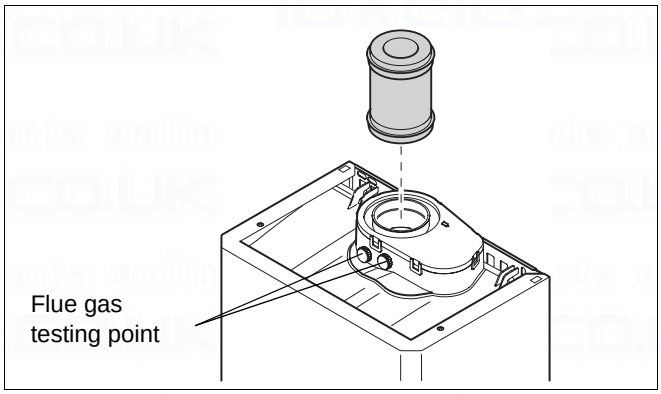

fig. 14 Vertical flue connection

NOTE
When using a stand-off frame, don't forget to take its measurements into account when designing a flue system.

1.8.1 Connecting the vertical flue gas duct

- Fit the vertical flue gas duct or flue gas adaptor (80/125 to 60/100) (→ fig. 14) onto the appliance flue connector.
- For remaining installation of the vertical flue assembly, refer to the relevant installation instructions.

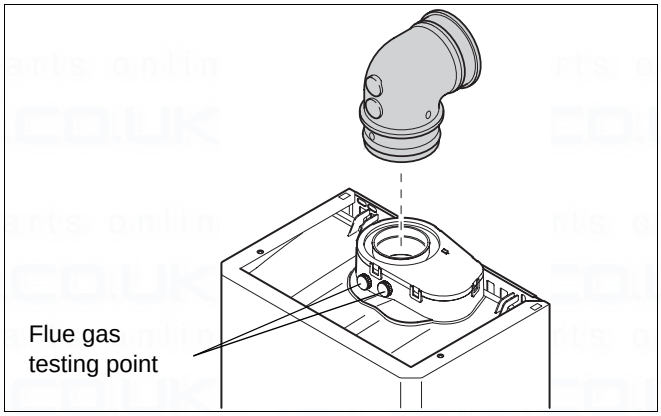

fig. 15 Elbow with flue gas testing point

1.8.2 Installation of the horizontal flue

The flue gas adaptor (80/125 to 60/100) is suitable for lengths upto 560 mm (→ fig. 16).
For longer flue runs upto 12.0 m, extension air/flue ducts are available (→ page 9, table 3).

NOTE
Use the wall-mounting template to help you mark the position of the side flue opening

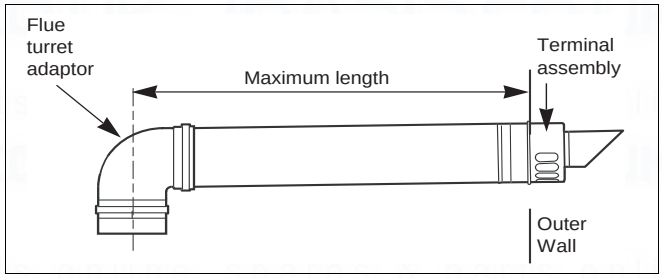

fig. 16 Installation with flue gas adaptor 80/125 to 60/100

1.8.3 Flue duct preparation and assembly

- Measure the flue length L. Refer to figures 17 and 18.

NOTE
The flue must be inclined to the boiler.

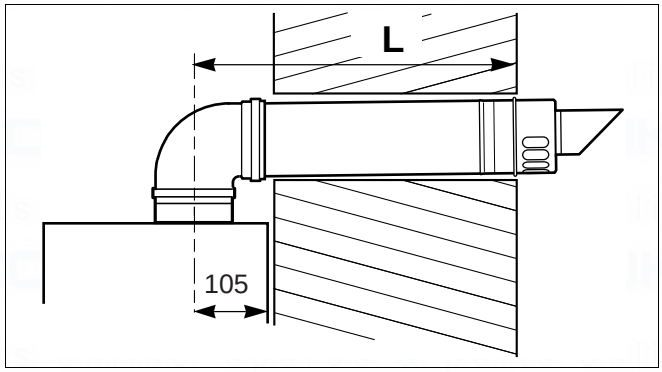

fig. 17 Flue length - rear

- Mark of the lengths shown onto the ducts and cut the length. The cuts must be square and free from burrs. Terminal assembly outer (air) duct - L-70 mm, inner (flue) duct - L-50 mm. The measurement is made from the ridge at the terminal indicating the outer face of the wall. Refer to figure 19.
  Extension air duct - L-70 mm, flue duct - L-50 mm.
  The measurement is from the formed end.

- Assemble flue system completely. Push the ducts fully together. The slope of the terminal outlet must be face downwards.
  The assembly will be made easier if a solvent free grease is lightly applied to the male end of the ducts.

NOTE
An inner wall sealing plate is provided which should be fitted to the ducts before assembly.

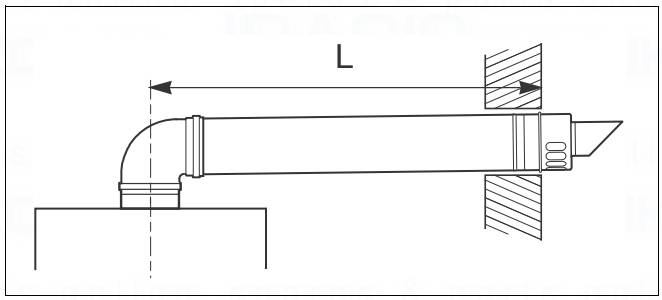

fig. 18 Flue length - side

- Push the assembly through the wall and slide the turret onto the flue connector. Refer to figure 15.
- Ensure that the turret is fully entered into the socket on the boiler. From the outside fix the flue finishing kit to the terminal and, after ensuring the duct is properly inclined towards the boiler, fix the finishing kit to the wall.
  If the terminal is within 2 m of the ground where there is access then an approved terminal guard must be fitted. The guard must give a clearance of at least 50 mm around the terminal and be fixed with corrosion resistant screws.

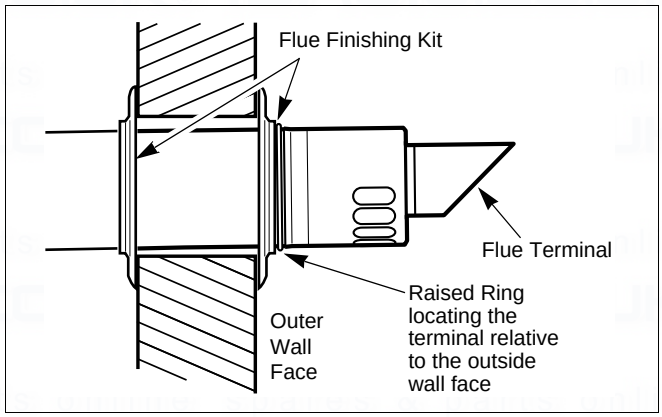

fig. 19 Flue terminal position

1.9 Electrical connections

1.9.1 Mains connection

A mains supply of 230 V - 50Hz is required.

External controls are suitable for volt free or 230 V installation.

Wiring to the boiler MUST be in accordance with the current I.E.E. (**BS.7671**) Wiring Regulations and any local regulations.

Wiring should be a 3 core PVC insulated cable, not less than 0.75 mm^2 (24 x 0.2 mm), and to **BS.6500 Table 16**.

Connection must be made in a way that allows complete isolation of the electrical supply such as a double pole switch having 3 mm (1/8") contact separation in both poles, or a plug and socket, serving only the boiler and system controls. This boiler is equipped with a double pole switch → fig. 20, item 1. The means of isolation must be accessible to the user after installation.

The electrical connection to the mains supply should be readily accessible and adjacent to the boiler.

If the supply cord is damaged, it must be replaced by a registered Corgi installer to avoid a hazard.

The electrical supply for both the boiler and the system must be taken from the same fused spur outlet.

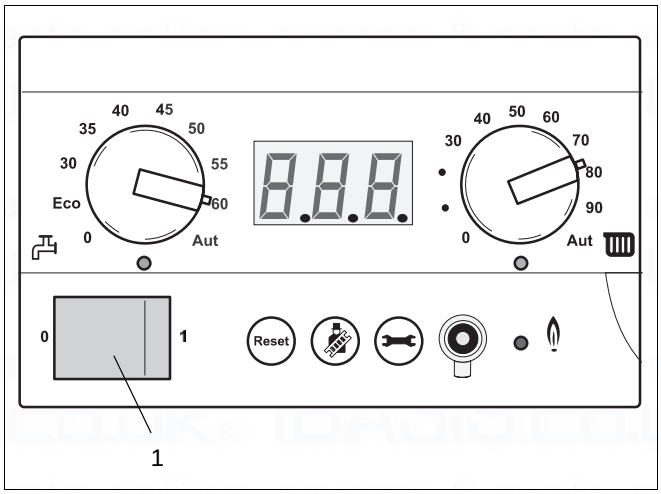

fig. 20 UBA

1.10 Wiring Diagram

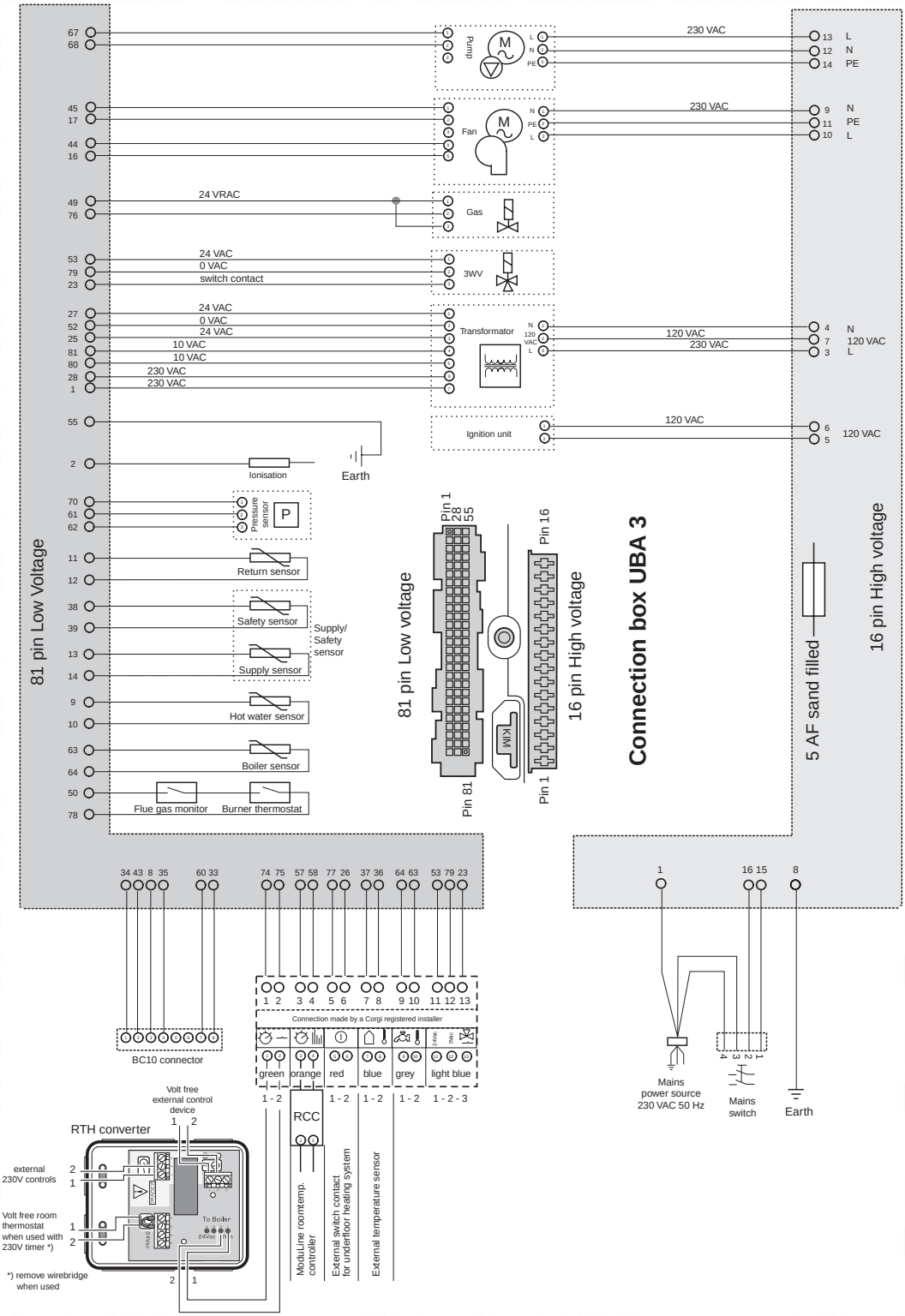

IMPORTANT
The wires in this mains lead are coloured in accordance with the following code:
GREEN AND YELLOW - EARTH ; BLUE - NEUTRAL ; BROWN - LIVE
As the colours of the wires in the mains lead of of the appliance may not correspond with the coloured markings identifying the terminals in your connector proceed as follows:
The wire coloured green and yellow must be connected to the terminal on the connector marked with the letter E or by the earth symbol ⏚ or coloured green or green-and-yellow. The wire coloured brown must be connected to the terminal marked with the letter L or coloured red. The wire coloured blue must be connected to the terminal marked with the letter N or coloured black.
WARNING
THIS APPLIANCE MUST BE EARTHED
Ensure that your appliance is connected correctly - if you are in any doubt consult a qualified electrician.

For location of individual components, see service section and the exploded views in this manual.

1.10.1 External controls

The gas wall hung boiler condensing can be fitted with the following external controls:

– a Buderus RC, *i*RT or ModuLink 250 RF modulating room-temperature controller (→ subsection 1.10.2);

– a room-temperature control device at 230V connected to the room control converter (→ subsection 1.10.3);

– ON/OFF temperature controller, volt free (→ subsection 1.10.4).

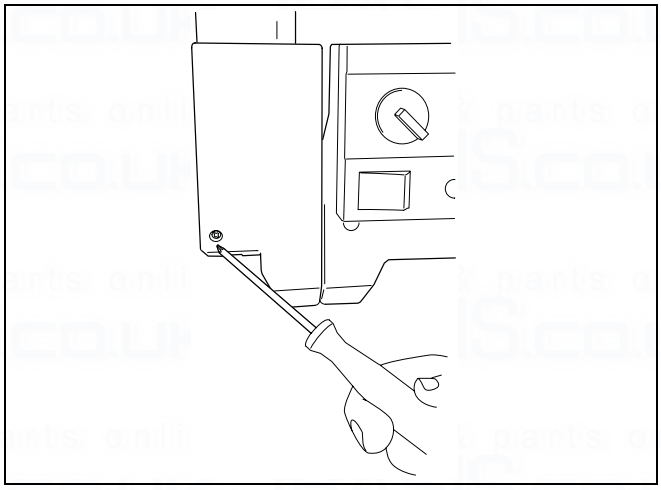

fig. 21 Connection box cover

1.10.2 Buderus modulating room thermostat connection

- Open the connection box (→ fig. 21).
- Connect a Buderus modulating room thermostat (Buderus *i*RT or RC) to the RCC connection box (→ fig. 22, item 1).
- Replace the cover of the connection box and secure with the screw.

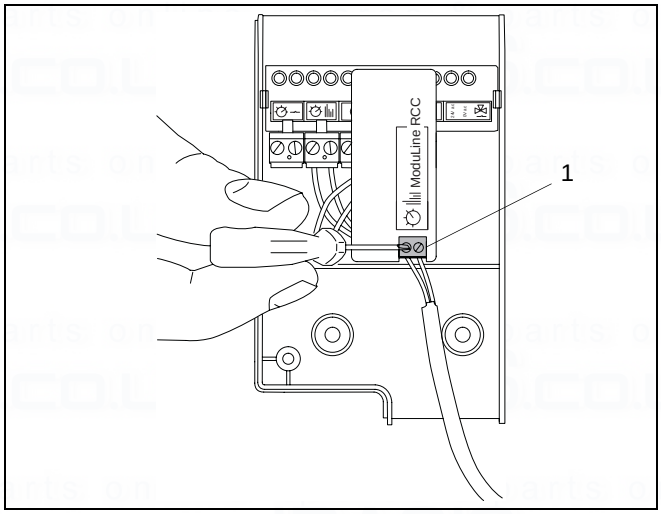

fig. 22 RCC connection box

1.10.3 External 230V controls

WARNING!
This appliance must be earthed.

- Connect the black pre-wired lead to a permanent live supply (from the same fused isolator as all other controls on the heating system), L N E.
- Remove the cover of the room control converter (→ fig. 23, item 1).
- Feed the 230V switch live and neutral (from external controls) through the cable gland (→ fig. 23).
- Identify the 230V terminal block by the shaded area and 230V label.
- Connect the switch live to terminal "1" and a neutral to terminal "2" (→ fig. 23, item 2).

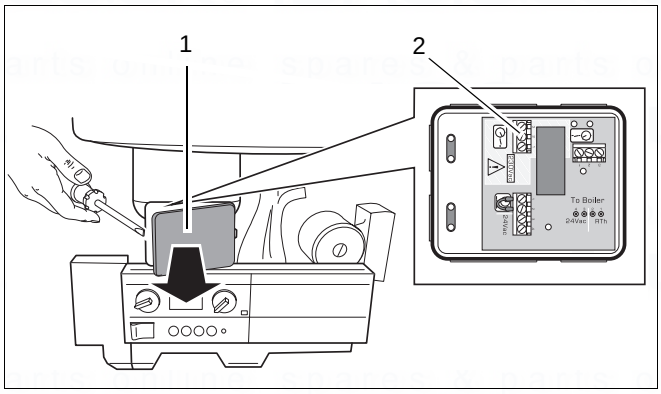

fig. 23 Connection box - 230 Volt connection

NOTE
Terminal 3 (→ fig. 23, item 2) is not used.

1.10.4 Volt free room-temperature control device connection

- Connect the black pre-wired lead to a permanent live supply (from the same fused isolator as all other controls on the heating system), L N E.
- Remove the cover of the room control converter (→ fig. 24, item 1).
- Lead the control device wire through the cable lead (→ fig. 24).
- Fix the wire to terminal 1 and 2 of the volt free connection (→ fig. 24, item 2).

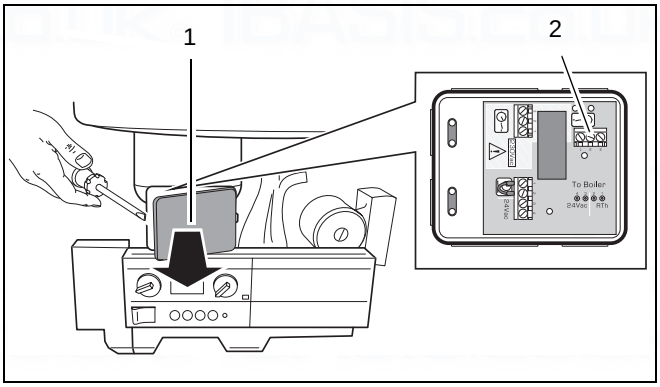

fig. 24 Connection box - Volt free connection

1.10.5 Other connections

Room control converter

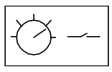

1-2 green

The room control converter is connected to this position.

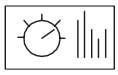

3-4 orange

Do not use this connection.

Connection of an external switch contact for underfloor heating system

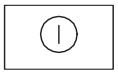

5-6 red

When this connection is in use for the safety of for example an underfloor heating system, then an "**8Y**" code is generated when the switch connection is open, the boiler will shut down.

External temperature sensor

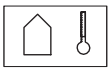

7-8 blue

When a Buderus modulating room temperature controller is installed which is used as an external temperature controller, then the external temperature sensor may be connected to this position.

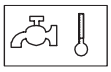

Do not use this connection.

Do not use this connection.

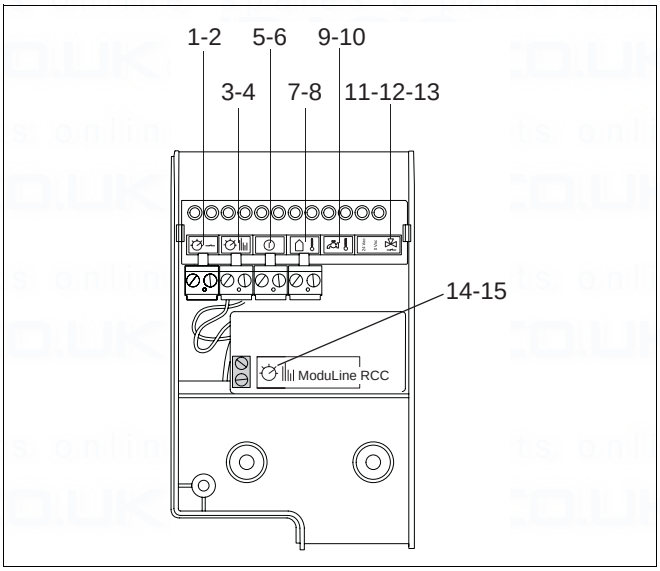

fig. 25 Connection box

1.10.6 System example

Buderus 600-28C with ModuLink 250 RF control

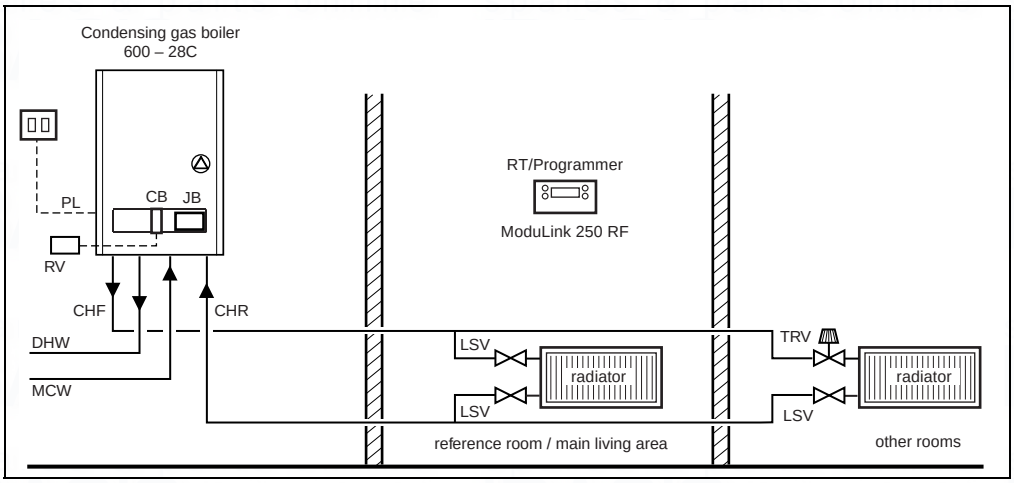

Key to abbreviations:
CB = Connection Block
CHF = Central Heating Flow
CHR = Central Heating Return
DHW = Domestic Hot Water
JB = Junction Block / RTH Converter
LSV = Lockshield Valve
MCW = Mains Cold Water
PL = Permanent Live
RT = ModuLink 250 RF
RV = ModuLink 250 RF Receiver
TRV = Thermostatic Radiator Valve

fig. 26

Buderus 600-28C with external 230V controls

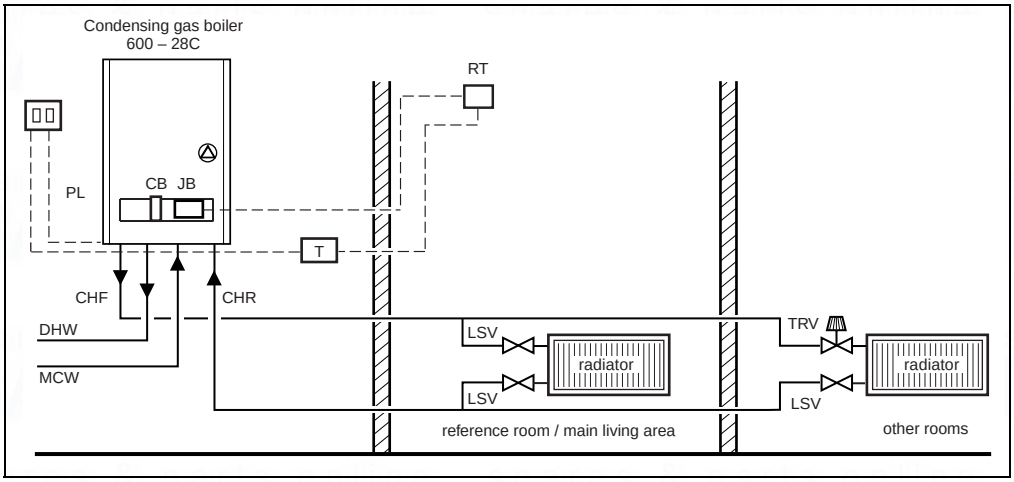

Key to abbreviations:
CB = Connection Block
CHF = Central Heating Flow
CHR = Central Heating Return
DHW = Domestic Hot Water
JB = Junction Block / Connection box (RTH Converter)
LSV = Lockshield Valve
MCW = Mains Cold Water
PL = Permanent Live
RT = Room Thermostat
T = Timer
TRV = Thermostatic Radiator Valve

fig. 27

Buderus 600-28C with external Volt Programable Room thermostat

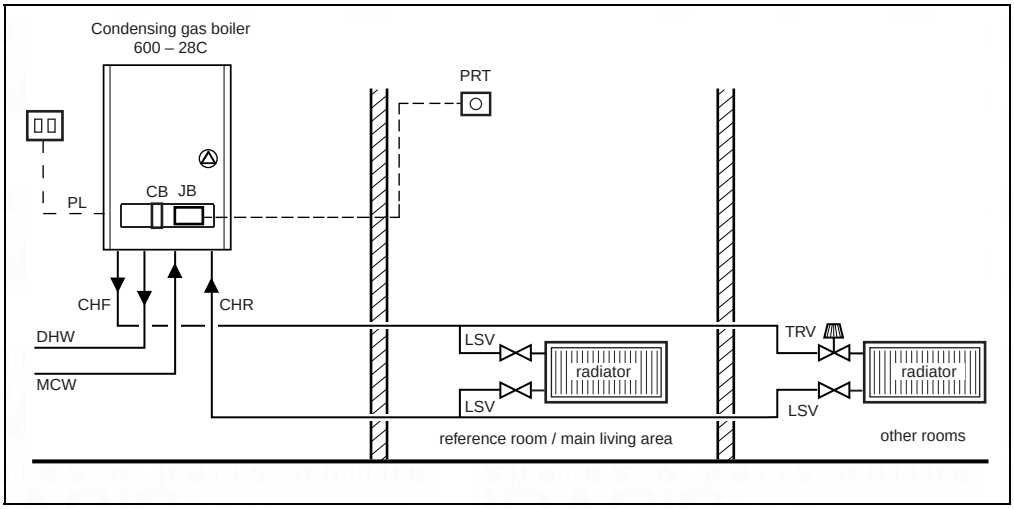

Key to abbreviations:
CB = Connection Block
CHF = Central Heating Flow
CHR = Central Heating Return
DHW = Domestic Hot Water
JB = Junction Block / Connection box (RTH Converter)
LSV = Lockshield Valve
MCW = Mains Cold Water
PL = Permanent Live
PRT = Programmable Room Thermostat (Volt Free Contacts)
TRV = Thermostatic Radiator Valve

fig. 28

2 Initial start-up

Fill out the protocol during the initial start-up.

2.1 Preparing the boiler for operation

CAUTION
DO NOT operate the condensing gas boiler if large amounts of dust are present, e.g. due to building work in and around the place of installation.

2.1.1 Fill the heating system

WARNING
The gas wall hung boiler condensing must not be activated at this stage.

NOTE
The boiler will not start up until the system pressure is greater than 0.2 bar.

- Remove the ventilation cover (→ fig. 29).

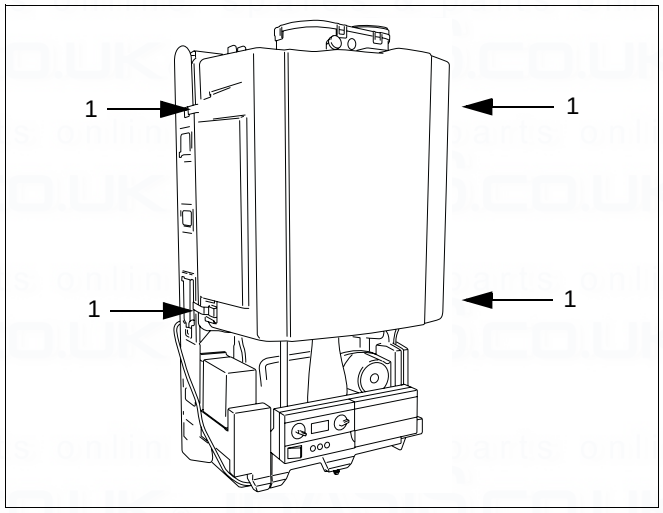

fig. 29 Remove ventilation cover

- Adjust the knobs for central heating (→ fig. 30, item 1) and domestic hot water (→ fig. 30, item 2) to '0'.

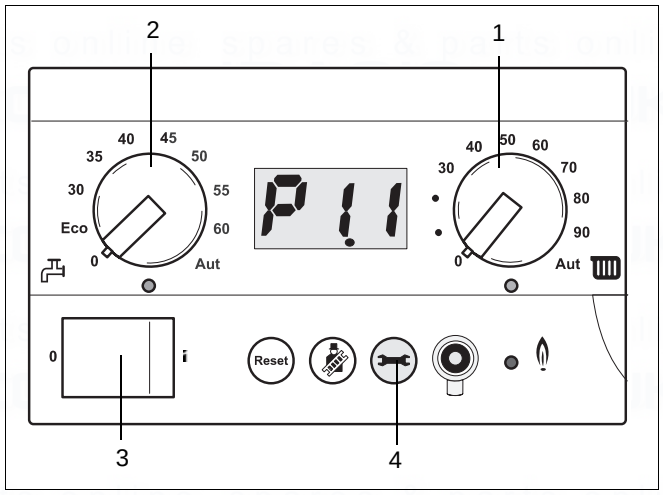

fig. 30 Control panel

- Loosen the automated air vent one turn (→ fig. 31).
- Connect the system to the mains power supply.
- Set the switch on the BC10 to "1" (→ fig. 30, item 3)
- Press the service button (→ fig. 30, item 4) several times until the system pressure (for example P1.1) appears in the display.

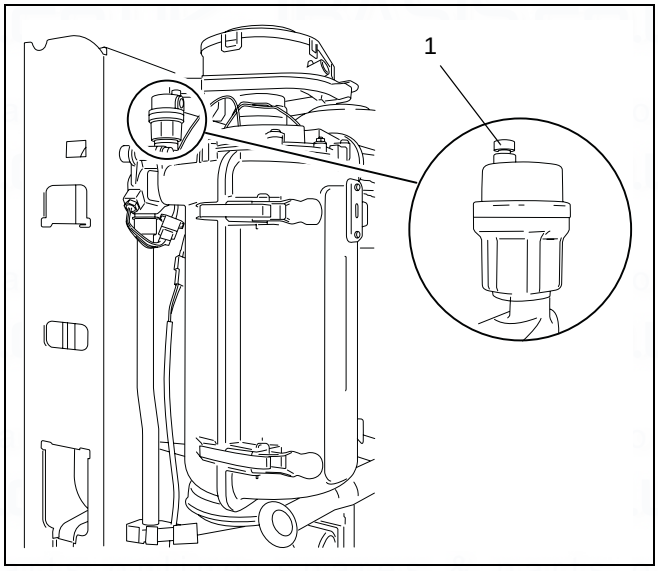

fig. 31 Automatic air vent

- If necessary open the CH flow and CH return maintenance valves (→ fig. 32, item 1 and 2).

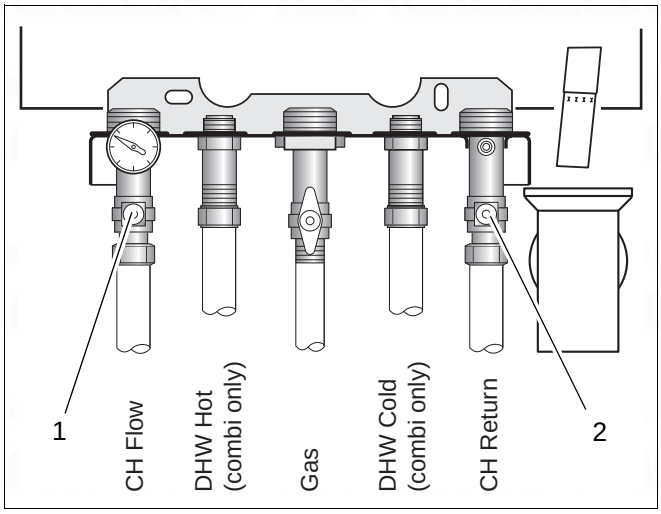

fig. 32 Maintenance shutoff valves

- Connect temporary hose (→ fig. 33).
- Open both stop valves.

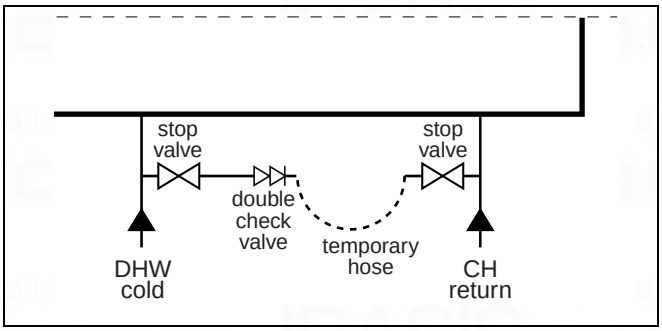

fig. 33 Connecting temporary hose

- Fill the system to a pressure of approx. 1.5 bar (→ fig. 34, item 1).
- Shut both stop valves and disconnect the filling loop.
- Purge all radiators from air starting downstairs and working your way up.
- Check the pressure after purging. If the pressure has dropped under 1.0 bar then top up the system as described previously.

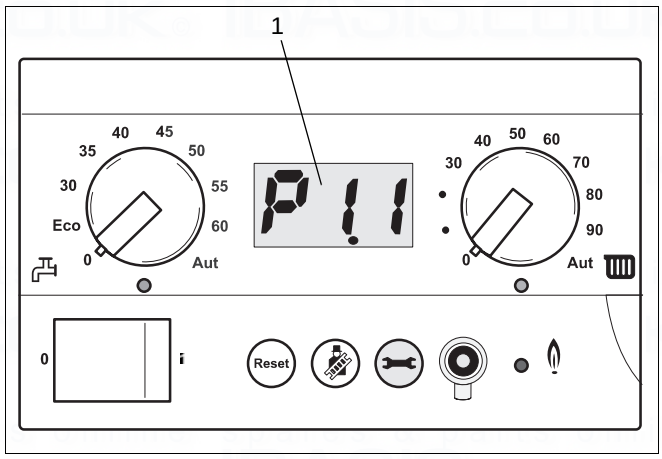

fig. 34 Pressure display

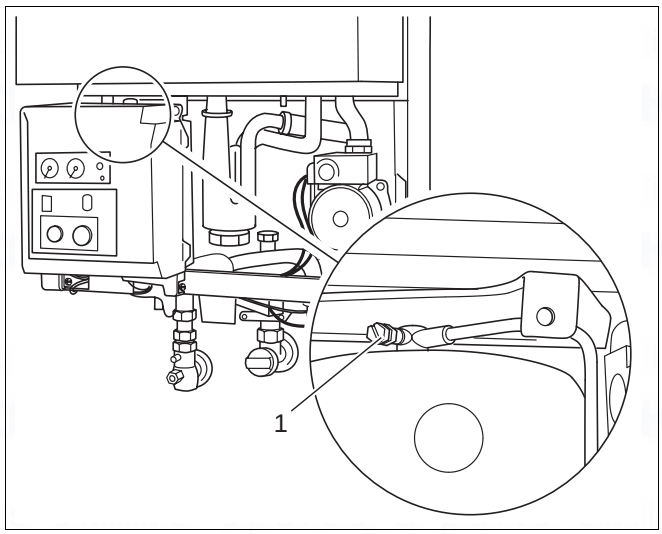

fig. 35 Purge the hot water heat exchanger of air

To drain the system take the following steps:

- Close the DHW cold and the CH return valve.
- Connect temporary hose (→ fig. 36).
- Open the CH return stop valve to drain the system.

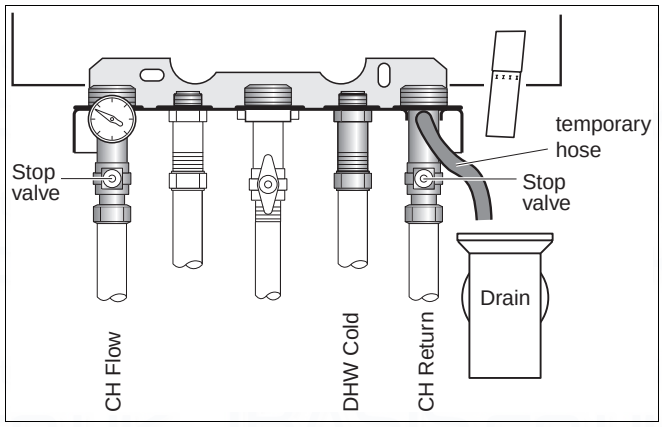

fig. 36 Draining the system

2.1.2 BC10 adjustments

The boiler is equipped with an 3.0 UBA. This is the brain of the boiler. The BC10 is located behind the access panel cover.

The BC10 allows you to operate the boiler and to make adjustments in its settings such as the temperature for the DHW.

BC10 overview:

Mains switch (→ fig. 37, item 1)

Use this switch to turn the boiler on or off.

Reset button (→ fig. 37, item 2)

When a blinking code is in the display, it is possible to try and restart the boiler by pressing this button.

Chimney sweep button (→ fig. 37, item 3)

When this button is pressed for 2 to 5 seconds, the boiler will operate at full power for central heating. A dot is visible in the lower right hand corner of the display when the chimney sweep mode (service mode) is active (→ fig. 38). When the set flow temperature is reached within 30 minutes then the boiler returns to normal operation. Otherwise the boiler will return to normal operation after 30 minutes. Once the boiler is in service mode you can terminate the service mode by pressing the chimney sweep button for 2 to 5 seconds again.

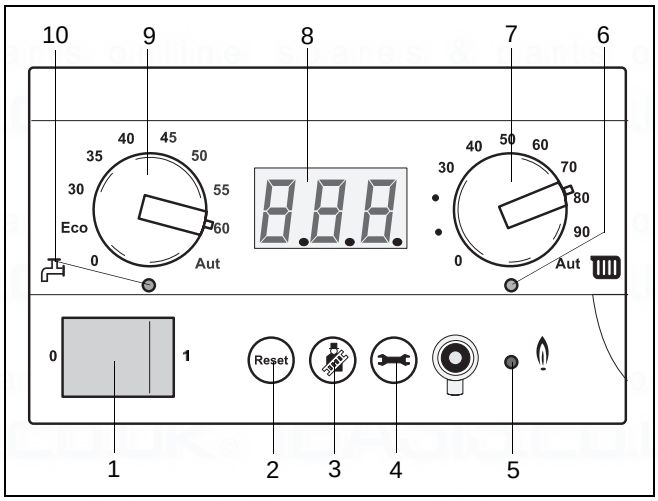

fig. 37 BC10

item 1: Mains switch
item 2: "reset" button
item 3: "chimney sweep" button
item 4: "service" button
item 5: LED "burner on"
item 6: LED "central heating staus"
item 7: central heating water temperature knob
item 8: display
item 9: DHW temperature knob
item 10: LED "DHW status"

Emergency operation

By pressing the chimney sweep button for longer than 5 seconds, the emergency operation is activated. The boiler will burn continuously for 24 hours according to the set flow temperature. Warm water is available during emergency operation.

The dot in the lower right hand corner of the display will blink (→ fig. 39).

- Press the chimney sweep button until the blinking dot disappears from the display to end the emergency operation.

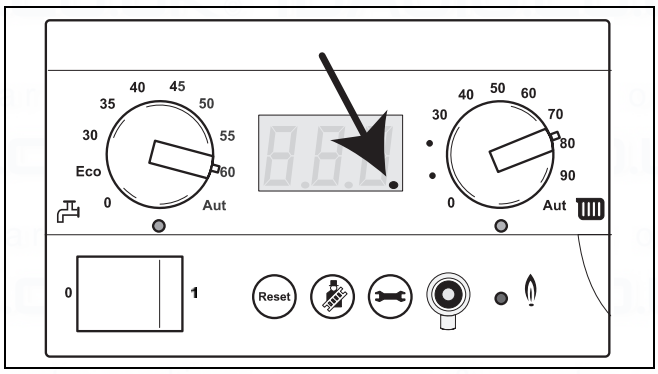

fig. 38 Boiler is in chimney sweep (service) mode

Service Button (→ fig. 37, item 4)

Pressing the 'service button' repeatedly allows you to scroll through this menu. The menu shows the flow temperature, system pressure and the current operating status.

LED "burner on" (→ fig. 37, item 5)

This LED indicates that the burner is on.

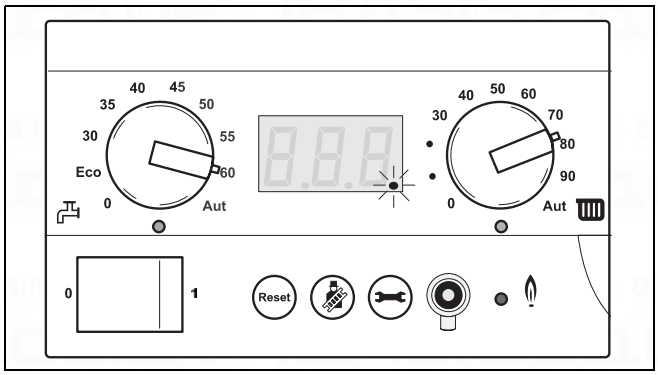

fig. 39 Emergency operation is active.

Setting the flow temperature (→ fig. 37, item 7)

The knob with the radiator symbol (→ fig. 37, item 7) allows the installer to set the maximum flow temperature (→ table 4). When the boiler is in operation for central heating then the LED "CH operation" (→ fig. 37, item 6) is lit.

Setting	Function	Description
0	off	Central heating function is switched off.
30 - 90	Flow temperature in °C. However the boiler is capped off at 80 °C. This means that position 80 is 80 °C, but also position 90 is 80 °C.	
Aut.	Do not use this setting	

table 4 Flow temperature

Setting the domestic hot water temperature (→ fig. 37, item 9)

Turn the knob with the tap symbol (→ fig. 37, item 9) to the desired temperature for your domestic hot water (→ table 5).

Set the knob to "**Eco**" when the boiler is situated in an area with calcareous water to prevent calcification as much as possible.

When the boiler is in operation for domestic hot water, the LED "DHW operation is on (→ fig. 37, item 10).

Setting	Function	Description
0	off	DHW is turned off
Eco	Energy saving setting The heat retaining temperature of the hot water tank is 26 °C and the outlet temperature of the hot water tank is 60 °C.	minimal comfort, minimal energy consumption, minimal calcification.
30 - 60	Desired temperature of the heat retaining temperature of the hot water tank and the outlet temperature of the hot water tank.	Maximum comfort when set at 60° C
Aut.	Do not use this setting	

table 5 Domestic hot water temperature

Setting the pump run over time

ATTENTION
When there is a freezing hazard set the pump run over time to 24 hours (Fld) (→ fig. 40, item 3).

- Press the chimney sweep button and the service button (→ fig. 40, item 2 and 1) simultaneously until "L−−" appears in the display.
- Press the service button repeatedly until "F 5" appears in the display. "F 5" means that the pump run over time is currently set at 5 minutes. This is the factory setting.
- Adjust the pump run over time by pressing the chimney sweep button to reduce the run over time of the pump and the reset button to increase the pump run over time. The range is 0 min to 60 min. (F 0..F60) and 24 hours (Fld).
- Confirm the selection by pressing the service button (→ fig. 40, item 1).

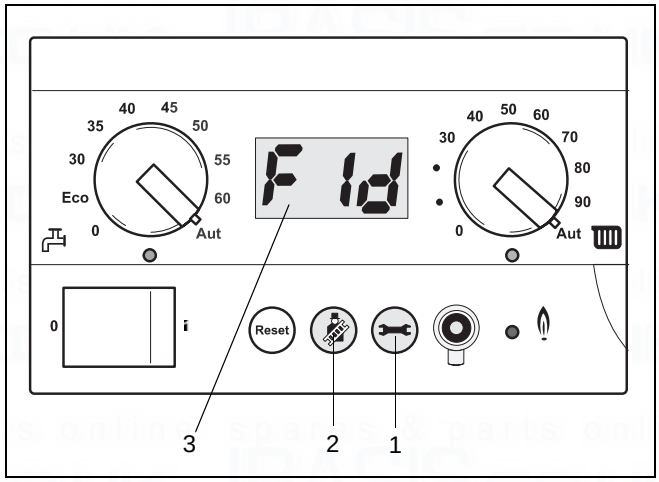

fig. 40 Pump run over time to 24 hours

2.1.3 Setting the heating capacity

The heating capacity can be adjusted on the BC 10.

- Press the chimney sweep button and the service button at the same time until "L--" (→ fig. 41) appears in the display.
- Adjust the capacity with the reset button and chimney sweep button. The range is from "L01..L99" (→ table 6). To run the boiler at 100% set to "L--"
- Confirm the setting by pressing the service button two times (→ fig. 41, item 1).

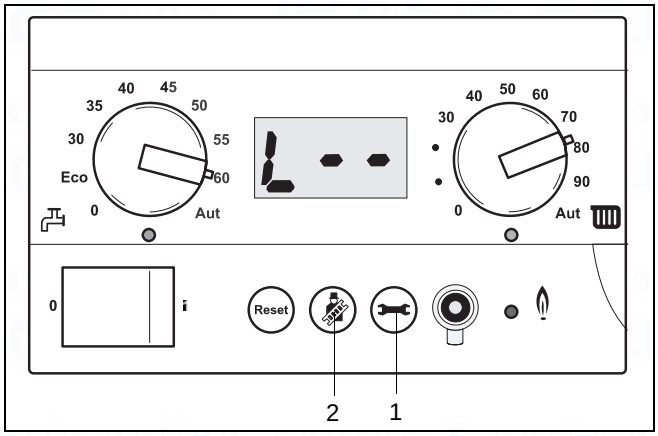

fig. 41 Maximum heating capacity

2.1.4 Checking for leaks

Use a suitable pressure gauge for the different pressure readings. It should be able to handle pressures a minimum of 50 mbar with an accuracy of 0.01 mbar minimum.

- Disconnect the system from the power supply.
- Check all sections of gas pipework and connections for signs of leaks before starting up the system for the first time. If a leak is detected during tightness testing, use an approved leak detector to check all connections for possible escapes.
  The product must be certified as a gas leak-testing agent. DO NOT allow the product to come into contact with electrical wiring.

The test pressure of the gas pipe when the gas shutoff valve is open may not exceed 150 mbar.

ATTENTION
Check the used measuring nipples for gas tightness.

Display [%]	Heating capacity at 40/30 °C [kW]
	Buderus 600 - 28C
L25	6.0
L30	7.2
L35	8.4
L40	9.6
L45	10.8
L50	12.0
L55	13.2
L60	14.4
L65	15.6
L70	16.8
L75	18.0
L80	19.2
L85	20.4
L90	21.6
L95	22.8
L--	24.0

table 6 Heating capacity in percentages

2.1.5 Checking the gas type

It is very important that the gas type to which the boiler will be connected corresponds to the gas type the boiler is equipped with. If this is not the case, then the boiler may not be put into operation.

- Check the gas type with your gas supplier and compare this to the boiler's gas type as registered on the identfication tag (→ table 8).

It is possible to change the boiler to another gas type (→ table 7). This accessory can be ordered from your supplier.

Type of gas	Factory settings of gas burners
Natural gas **H**	When delivered ready for operation and set to Wobbe index 14.1 kWh/m^3 (referred to 15 °C, 1013 mbar), applicable for Wobbe index range 11.3 to 15.2 kWh/m^3. Inscription on gas-type indicating label: Category setting: 2H G 20_20 mbar
LPG	After adaptation by a CORGI registered installer, the unit can be run on LPG. Inscription on gas-type indicating label: 3P G 31_37 mbar

table 7 Gas-supply types

Type of gas	Gas nozzles ∅ [mm]	Venturi tubes
	Buderus 600 - 28C	
Natural gas **H** (G20)	4.45	Standard Venturi tubes
LPG	3.45	Standard Venturi tubes

table 8 Gas-nozzle diameter

2.1.6 Adjusting the hot water flow regulator

CAUTION
It is important to adjust the flow of hot water, due to the resistance of the pipes in the installation and the differences in water pressure.

Adjust the hot water flow regulator (→ fig. 42) to the desired setting:

– To increase the flow of hot water: turn valve towards "**+**".

– To reduce the flow of hot water: turn valve towards "**-**".

Factory setting:
8 l/min of 60 °C, assuming that the DHW cold is 10 °C.

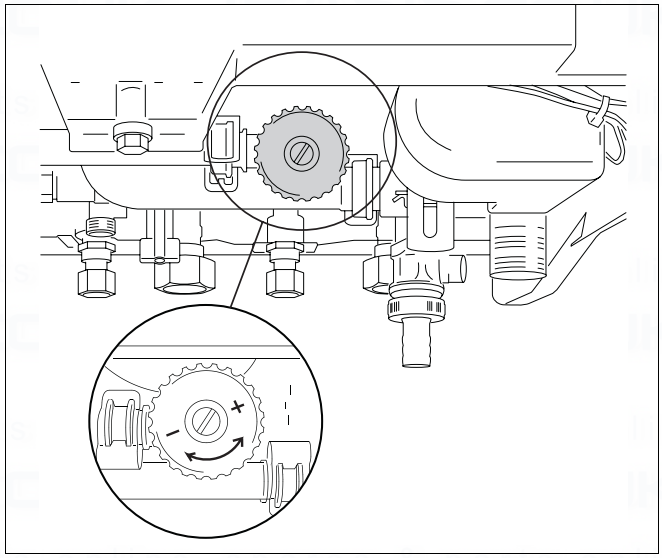

fig. 42 Hot water flow regulator

2.1.7 Measuring the gas-supply pressure (flow pressure)

There are two ways to measure the gas-supply pressure:
– measuring the standing gas-supply pressure (boiler not in operation);
– measuring the working gas-supply pressure (boiler operating at full power).

NOTE
The difference between the standing and working pressure may never be greater than 5 mbar.
If the difference between the two is greater than 5 mbar then the pressure in the gas pipe is too great.

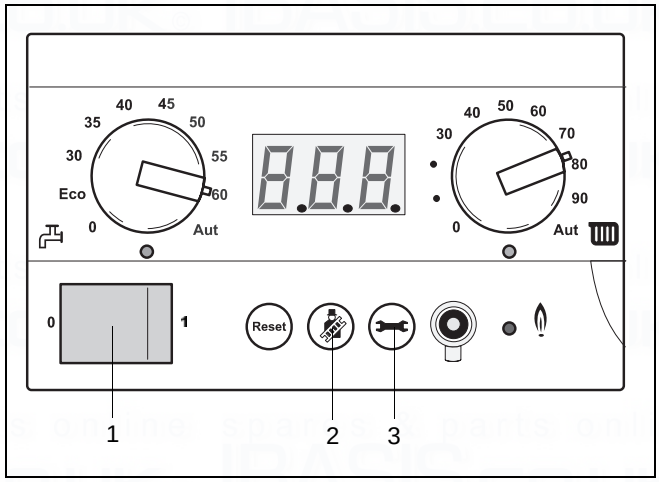

fig. 43 Press the chimney sweep button

Measuring the standing gas-supply pressure

- Take the boiler out of service by pressing the mains switch (→ fig. 43, item 1) to "**0**".
- Close the gas shutoff valve (→ fig. 44, item 1).
- Set the pressure gauge to "**0**".
- Attach a tube from the pressure gauge to the gas test nipple (the lower one, → fig. 45, item 2).
- Slowly open the gas shutoff valve.
- Measure the standing gas-supply pressure.

Measuring the working pressure

- Take the boiler out of service by pressing the mains switch (→ fig. 43, item 1) to "**0**".
- Close the gas shutoff valve (→ fig. 44, item 1).
- Set the pressure gauge to "**0**".
- Attach a tube from the pressure gauge to the gas test nipple (the lower one, → fig. 45, item 2).
- Slowly open the gas shutoff valve.
- Open at least two radiators.

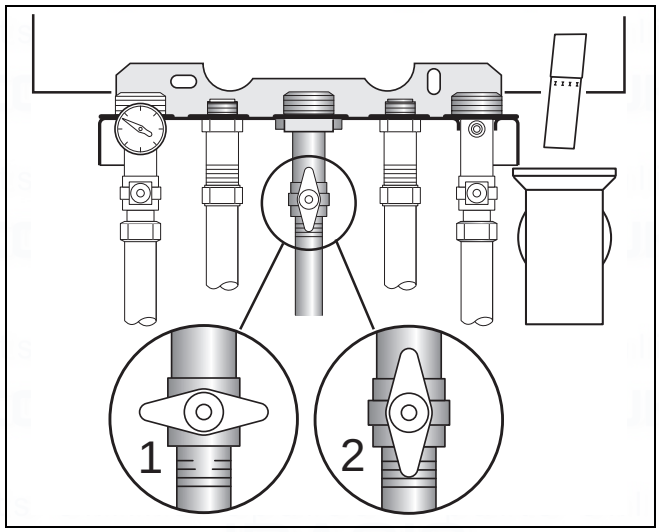

fig. 44 Gas valve
item 1: Gas valve closed
item 2: Gas valve open

- Set the mains switch (→ fig. 43, item 1) to "**1**".
- Create a heat demand by pressing the chimney sweep button (→ fig. 43, item 2), until a LED is visible in the lower right hand corner (chimney sweep mode).
- Measure the working gas-supply pressure.
- The working gas-supply pressure should be between:
  a minimum of 17 mbar and a maximum of 25 mbar (nominal connection pressure of 20 mbar) for **natural gas H**.
  a minimum of 30 mbar and a maximum 50 mbar (nominal connection pressure 37 mbar for **LPG**.
- Pull off the tube from the gas testing nipple.
- Tighten the screw of the gas testing nipple.

ATTENTION
If the required connection pressure is not available or too high, contact your gas supplier or TRANSCO.

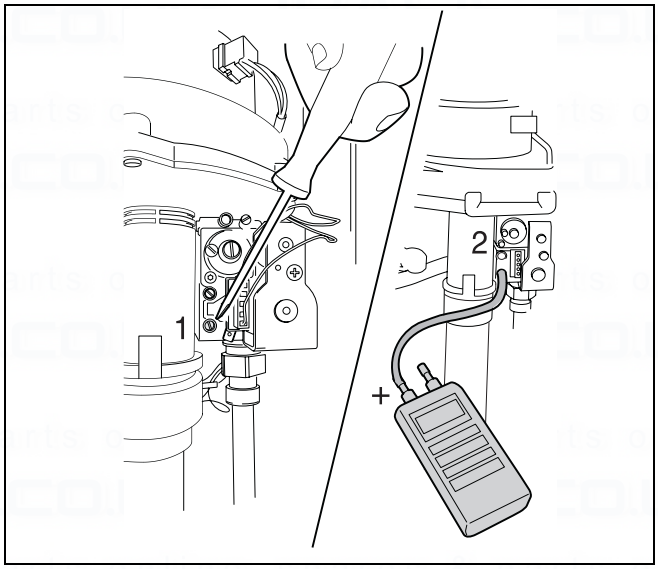

fig. 45 Measuring the gas-supply pressure

Ensure that all disturbed joints and connections are checked for gas tightness on completion of tasks.

2.1.8 Checking the gas/air ratio and adjust as required

- Turn mains power switch to "**0**" and make sure that the boiler is not in chimney sweep mode.
- Remove the casing of the boiler.
- Shut the gas shutoff valve underneath the boiler (→ fig. 44, item 1).
- Open at least two radiators.
- Open the top measuring nipple (→ fig. 46, item 1) with two turns.
- Set the pressure gauge to "**0**".
- Connect a tube from the "+" side of the pressure gauge to burner-pressure testing nipple (→ fig. 46, item 2)
- Open the gas shutoff valve (→ fig. 44, item 2).
- Set the mains switch to "**1**".
- Set the boiler in service mode by pressing the chimney sweep button until a non-blinking LED appears in the lower right hand corner of the display.
- Press the chimney sweep button and the service button at the same time, until "L−−" appears in the display.
- Adjust the capacity to "L25" by pressing the reset button.
- The optimum gas/air ratio is - 5 Pa (-0.05 mbar).
  The pressure difference should be between -10 and 0 Pa (→ fig. 47).

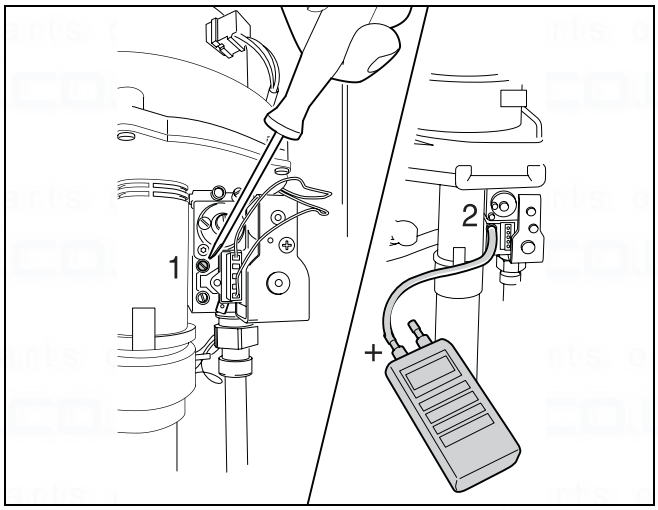

fig. 46 Check the gas/air ratio

If this is not the case then adjustment is needed:

- Remove the safety screw with a flat head screwdriver (→ fig. 48, item 1).
- Adjust the adjustment screw of the burner pressure to the correct gas/air ratio using a (4 mm) socket head wrench and by referring to fig. 47.
- Replace the safety screw.
- Set mains power switch to "**0**".

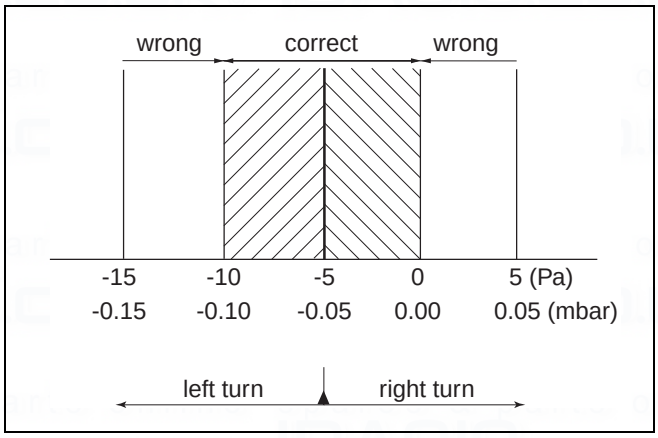

fig. 47 Pressure difference at gas/air at "L25"

- Shut the gas shutoff valve (→ fig. 44, item 1).
- Remove the tube from from the burner-pressure testing nipple.
- Tighten the screw on the burner-pressure testing nipple.
- Open the gas shutoff valve (→ fig. 44, item 2).
- Turn the mains power switch to "**1**".
- Set the boiler in service mode by pressing the chimney sweep button, until a non-blinking LED appears in the lower right hand corner of the display.
- Check the testing nipples for gas tightness.
- Turn off the boiler again by pressing the mains power switch to "**0**".
- Turn the boiler on by setting the mains power switch to "**1**".

CAUTION
Check the test nipples for gas tightness.

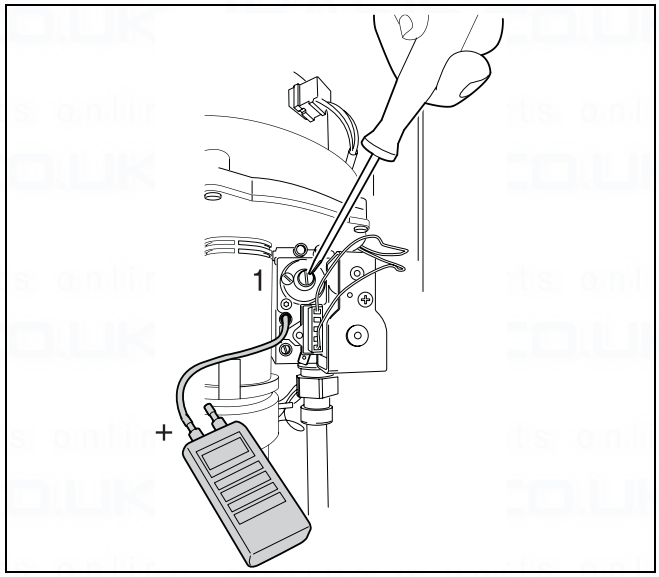

fig. 48 Adjust gas/air ratio

- Check if the boiler is still set at the desired heating capacity ("L−−" for example) and adjust when necessary (→ subsection 2.1.3: "Setting the heating capacity").

2.1.9 Gas rating test

- Isolate all other appliances.
- Set the boiler to maximum firing rate.
- Ensure that there is no modulating of the fan gas valve.
- Carry out the Gas Rating procedure as described in "Essential Gas Safety' 3rd edition on pages 169-176.

2.1.10 Checking for leaks while boiler is in operation

- Use an approved leak detector to check all connections for possible leaks. The product must be certified as a gasleak-testing agent.
- Do not allow the product to come into contact with the electrical wiring.

2.1.11 Function testing

NOTE
During initial start-up and annual servicing, make sure that all control, regulating and safety devices are in full working order and, if applicable, check for correct adjustment.

Measuring the ionisation current (→ fig. 49)

- Turn the mains power switch to "**0**" (→ fig. 43, item 1).
- Remove the casing.
- Remove the ventilation cover.
- Loosen the plug-and-socket connector of the ionisation electrode and connect the multimeter in series.
- On the measuring device, select the µ-direct current range. The measuring device must have a resolution of at least 1 µA.
- Set mains power switch to "**1**" (→ fig. 43, item 1).
- Set the boiler in service mode by pressing the chimney sweep button until a non-blinking LED appears in the lower right hand corner of the display.
- Press the chimney sweep button and the service button at the same time, until "L--." appears in the display. Write down the set heating capacity.
- Adjust the heating capacity to "L25." by pressing the reset button.
- Confirm by pressing the service button.
- Measuring the ionisation current. The ionisation current being checked must measure >2 µA direct current.
- Enter the reading on the report form.
- Set the mains power switch to "**0**" (→ fig. 43, item 1).
- Remove multimeter and restore the plug-and-socket connection to its original state.
- Refit the ventilation cover.
- Refit the casing and the safety screw (→ fig. 50, item 1).
- Set the mains power switch to "**1**" (→ fig. 43, item 1).
- Reset the heating capacity to the desired capacity (→ subsection 2.1.3: "Setting the heating capacity").

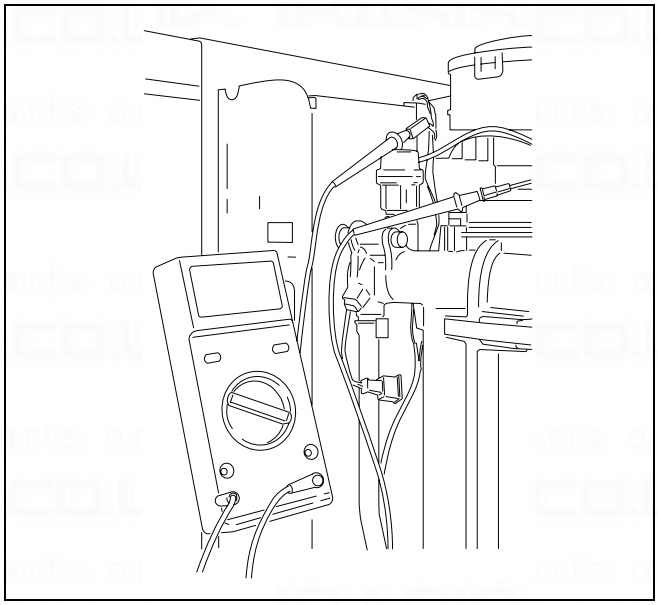

fig. 49 Measuring the ionisation current

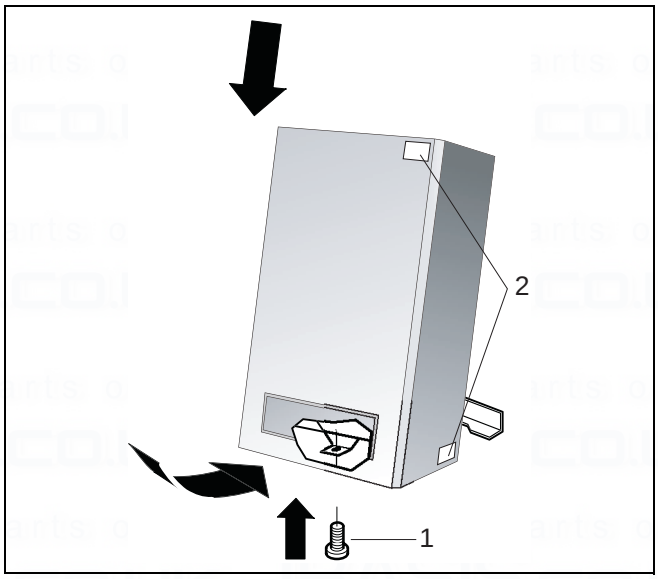

fig. 50 Refit casing and safety screw

2.1.12 Handing over

After completing the installation and commissioning of the system the installer should hand over to the householder by the following actions:

- Hand the user manual to the householder and explain his/her responsibilities under the relevant national regulations.
- Explain and demonstrate the lighting and shutting down procedures.

3 Inspection

3.1 General directions

- Do a visual and functional test of the installation.

3.2 Preparing the boiler for inspection

- Disconnect the boiler from the mains power supply.

DANGER OF FATAL INJURY
due to electric shock when system is opened.

- Before opening the system: disconnect the heating unit at the emergency OFF switch or the corresponding circuit breaker of the house power supply.
- Ensure that the heating system cannot be reconnected by accident.

- Remove the burner housing or cover from the heating boiler.

NOTE
If the gas supply pipes are to be disconnected from the burner, the housing MUST ONLY be removed by a qualified service technician and checked for tightness on reassembly.

- Replace the following seals two-yearly:
  - Flat seal between the gas pipe and gas air unit (→ fig. 53),
  - Seal ignition unit (→ fig. 55),
  - Seal ionisation electrode (→ fig. 55),
  - Seal heat exchanger (→ fig. 58),
  - Burner seal (→ fig. 59).
- Fill out the **Benchmark**.

3.2.1 Internal leak test

- Disconnect the boiler from the mains power supply.

Do not allow the product to come into contact with the electrical wiring.

3.2.2 Check the combustion chamber and heat exchanger for pollution

3.2.3 Check the burner

3.2.4 Check the functioning and safety of the flue gas exhaust

3.2.5 Check the pre-pressure of the expansion vessel

3.2.6 Check the hot water tank for leakage

3.2.7 Check the programming of the room thermostat

4 Maintenance

NOTE
The described cleaning of the burner and heat exchanger is only necessary when the boiler is heavily soiled. Otherwise it is sufficient to clean the burner and heat exchanger with a soft brush or compressed air without disassembling them.

4.1 Cleaning the heat exchanger and burner

- Switch the boiler off by setting the mains switch to "**0**" (→ fig. 43, item 1).
- Close the gas shutoff valve (→ fig. 44, item 1).
- Loosen the retaining screw (→ fig. 6, item 1) and remove the outer casing .
- Open the latches (→ fig. 51, item 1) and remove the ventilation cover.

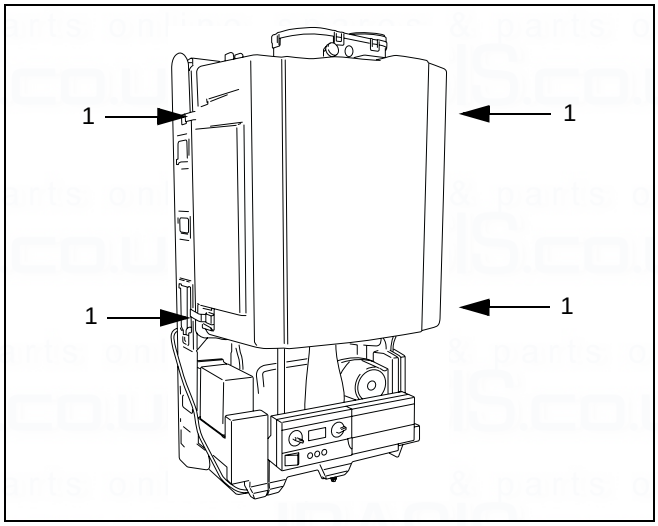

fig. 51 Remove the ventilation cover

- Loosen the gas connection between the gas supply and the gas air unit (→ fig. 52, item 1).

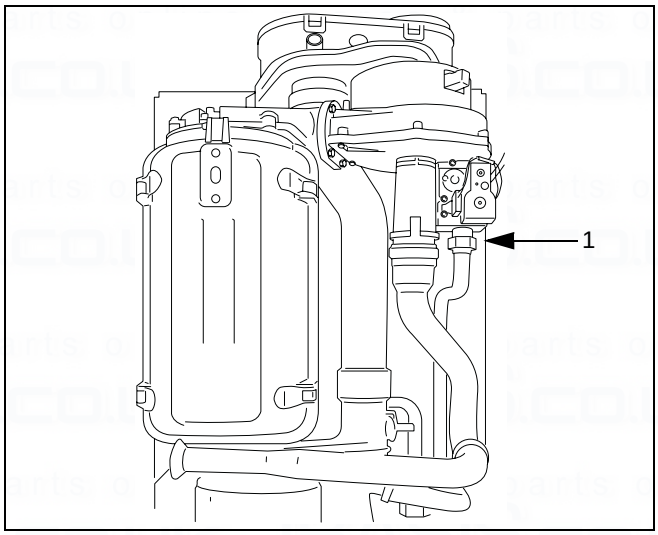

fig. 52 Loosen gas connection

- Replace the flat seal between the gas pipe and the gas air unit (→ fig. 53).

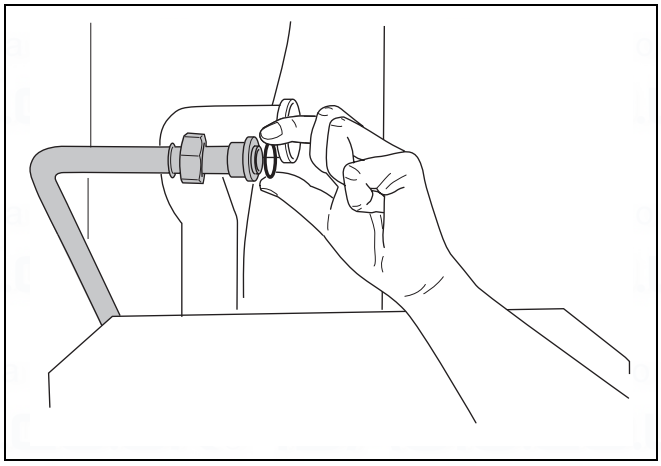
fig. 53 Replace the flat seal of the gas pipe

- Remove the plugs (→ fig. 54, item 1, 2 and 3) from the gas air unit.
- Remove the air suction tube from the gas air unit (→ fig. 54, item 4).
- Then remove the plugs of the ionisation electrode (→ fig. 54, item 6) and the ignition unit (→ fig. 54, item 5).

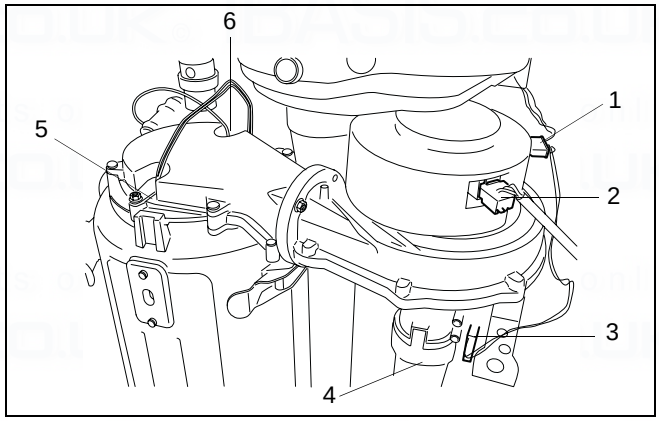

fig. 54 Remove plugs of the gas air unit

- Remove the ignition unit (→ fig. 55, item 1) and ionisation electrode (→ fig. 55, item 2).
- Mount a new ignition unit with mounting plate and nut.
- Mount the old ionisation electrode with a new seal, mounting plate and nut.

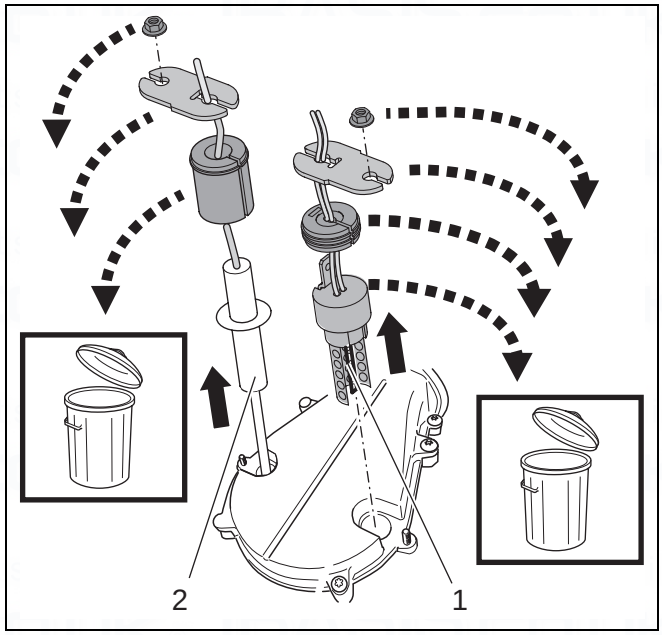

fig. 55 Remove the ignition unit and ionisation electrode

- By turning the unit a quarter turn (→ fig. 56, item 2), the unit can be removed by lifting it out of the boiler.
- Clean the burner when necessary. The burner may only be cleaned with a soft brush or compressed air.

CAUTION
Replace the ceramic burner seal after removing the burner from the gas air unit.

- Now the front cover of the heat exchanger can be removed by opening the latches (→ fig. 56, item 1).

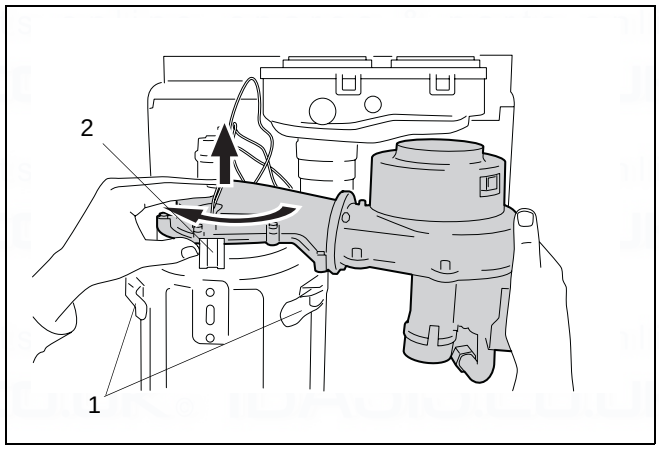

fig. 56 Remove gas air unit

- Remove the flue gas retarder from the heat exchanger (→ fig. 57, item 1).
- Inspect the heat exchanger. When needed clean the heat exchanger with a soft brush or compressed air.

NOTE
Only when a heat exchanger is heavily soiled is it recommended to drain the system, to remove the heat exchanger for cleaning.

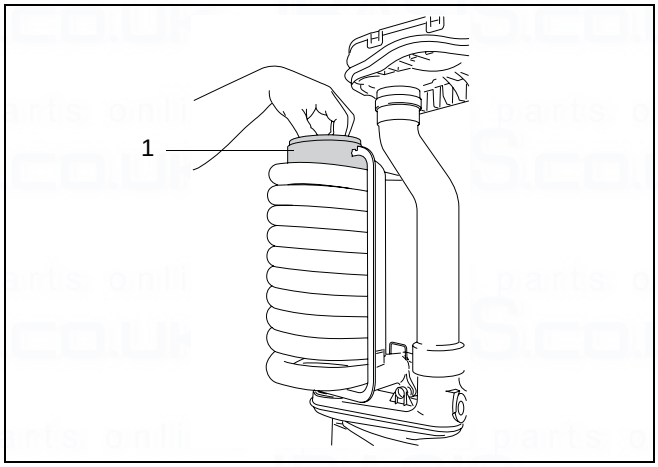

fig. 57 Remove flue gas retarder

- Replace the seal of the heat exchanger (→ fig. 59, item 1). The seal must be placed without tension and cut at the proper length at the end of it.
- Replace the 4 o-rings (→ fig. 59, item 2), 2 pieces at each side.

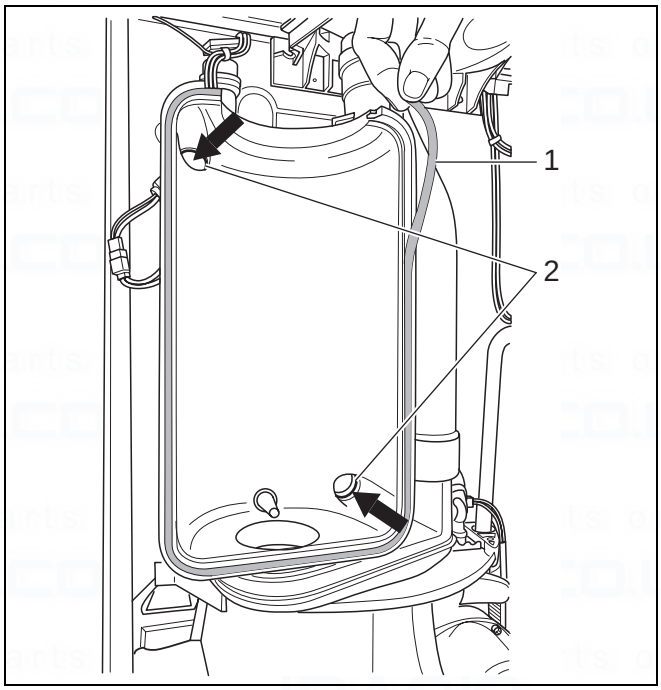

fig. 58 Replace the seal of the heat exchanger

- Remove the old burner seal (→ fig. 59).
- Place a new burner seal.

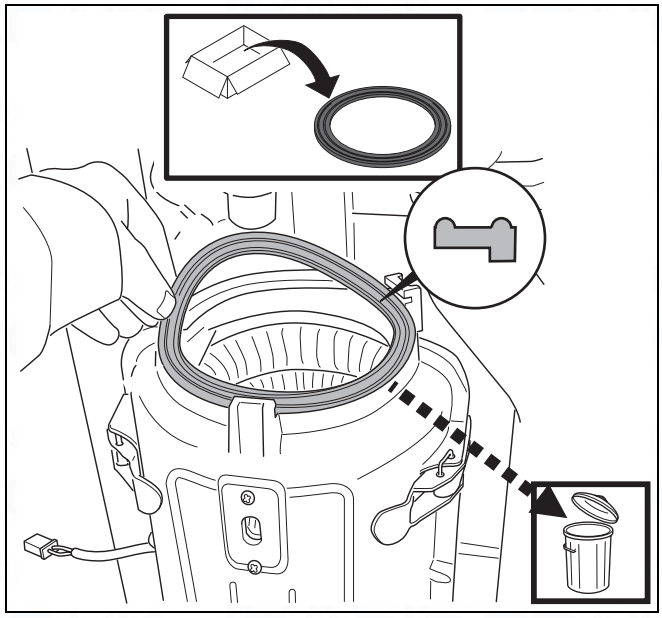

fig. 59 Replace burner seal

- Place a new flat seal between the gas pipe and the gas valve (→ fig. 60).
- Reassemble in reverse order.

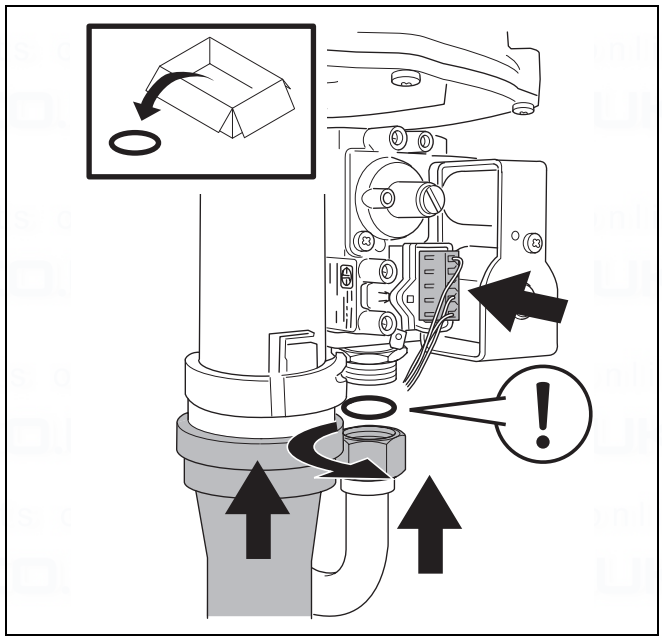

fig. 60 Place a new flat seal

4.2 Cleaning the condensate trap

- Remove the condensate trap (→ fig. 61).
- Clean the condensate trap with tapwater and a brush.
- If required, place a new lip seal.
- Fill the condensate trap with water and reassemble.

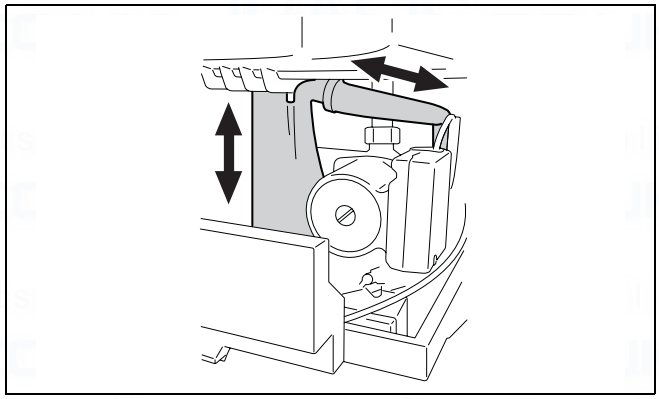

fig. 61 Cleaning the condensate trap

4.3 Flushing the hot water tank

- Switch the boiler off by setting the mains switch to "0" (→ fig. 43, item 1).
- Close the DHW (cold).
- Open the DHW (hot) to relieve the pressure from the water pipe.
- Pull out the safety clips (→ fig. 62, item 1).

CAUTION
Hot water will come out.

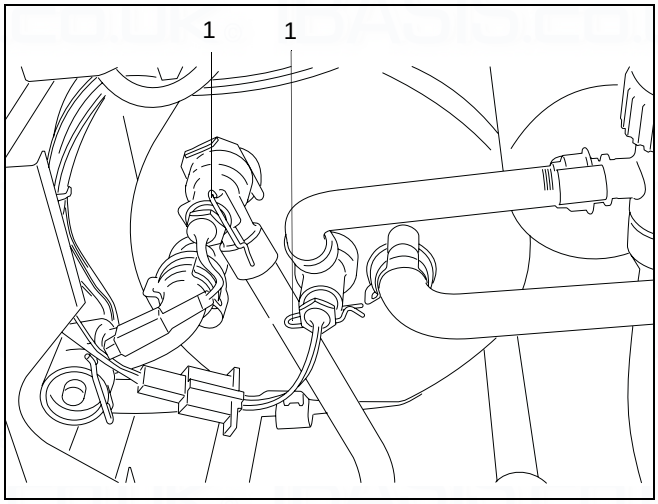

fig. 62 Remove safety clips of sensors DHW cold and hot

- Pull out the standby- and hot water sensor and place the flushing connections in their place (→ fig. 63).
- Connect the descaling device and flush the hot water tank. After flushing reconnect everything in reverse order.
- Open the DHW (cold) cock.
- Close the DHW (hot) cock after it has been purged and flushed.
- Take the boiler back in service by setting the mains switch to "1" (→ fig. 43, item 1).

ATTENTION
Check all couplings for leakage.

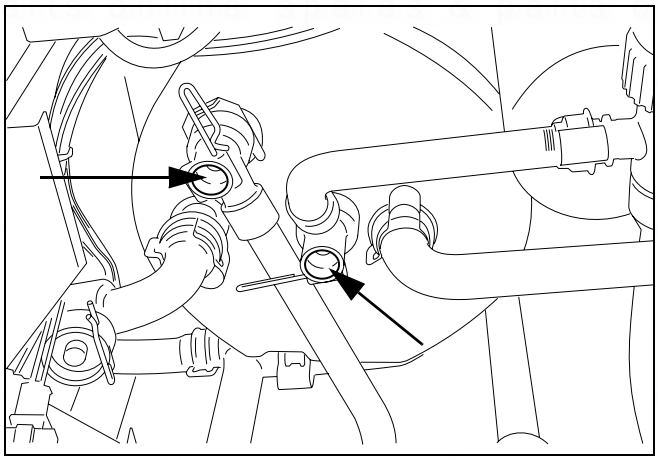

fig. 63 Flushing the hot water tank

5 Servicing

The display of the BC10 in the boiler always shows a code when the boiler is operational. It may be necessary to press the service button (→ fig. 43, item 2) once or twice to see the code.

The display will show normal operating codes (→ subsection 5.1), non-flashing fault codes and flashing fault codes (→ subsection 5.2).

The normal operating codes let the installer know what the current operational status is of the boiler.

A non-flashing fault code is mostly not too serious. Often the code disappears after a while, there is no need to reset the boiler.

A blinking fault code however is a blocking code. This means that the boiler will not operate until the problem is solved and/or the boiler is reset.

UBA 3

The LED on the UBA 3 (→ fig. 64, item 1) can also give useful information.

- When the indicator LED is off, then the boiler is operating normally.
- The LED flashes when there is a blocking fault code.
- The LED flashes quickly for 10 sec. when the boiler is fired for the first time.
- The LED is on when there is a problem with the UBA 3 or when it doesn't recognise the KIM.
- The LED comes on shortly after the electricity is switched on.

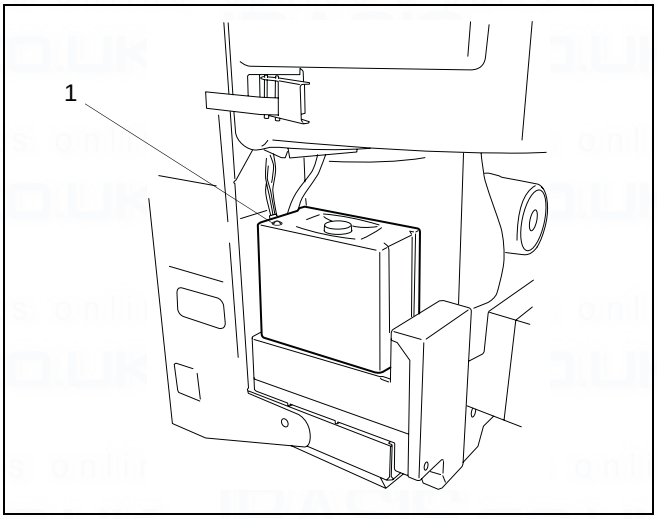

fig. 64 UBA 3

item 1: red indicator LED

5.1 Operating codes

NOTE
If the code displayed on the burner-control unit is not listed under the operating codes or fault codes, the burner-control unit itself is malfunctioning.

Display after pressing the service button	Meaning
0	**Buderus 600 - 28C is ready for operation**
0A	Burner interval circuit, 10 min. from burner start-up
0C	Waiting for activation of the three-way valve (if fitted) or pump
0H	Stand-by activated, Buderus 600 - 28C ready to provide heat or hot water
0L	Initial safety period: self-testing of burner-control unit during burner start-up
0U	Post- or pre-purging period of fan unit
0Y	Flow temperature at adjustment setting
–	**Buderus 600 - 28C running in heating mode**
–A	“Chimney-sweep” mode, flow-temperature controller bypassed, Buderus 600 - 28C heating to previously-entered flow temperature.
–H	Normal heating mode
–Y	Service mode
=	**Buderus 600 - 28C running in hot water mode**
=H	Normal hot water mode
r	**Reset**
rE	**Reset** (when the reset button is pressed on the BC10, the boiler will attempt to fire up)

table 9 BC10 operating codes (after pressing the service button)

5.2 Fault codes

Code	Meaning	
1C	***Blinking fault code**: Flue gas thermostat or the burner thermostat (if present) measured a too high temperature.*	
Possible cause		**Action**
1	Flue gas temperature too high	– Check the flue gas system – Check the flue gas retarder
2	Burner temperature too high	– Check the heat exchanger – Check the flue gas system (including condensate trap)
3	Flue gas sensor faulty	Check the wiring and connections of the flue gas sensor and replace when necessary (→ subsection 5.3.1)
4	Burner thermostat faulty	Check the wiring and connections of the burner thermostat and replace when necessary (→ subsection 5.3.20)

Code	Meaning	
2E	***Non blinking fault code**: Water pressure in the system lower than 0.2 bar*	
Possible cause		**Action**
1	System pressure not checked in time	Top up the system to at least 1.0 bar (→ subsection 2.1.1)
2	Pressure sensor is defect	Replace pressure sensor

Code	Meaning	
2F	***Non blinking fault code**: The flow part of the bi-sensor did not detect a rise in the temperature of the central heating water after a burner start*	
Possible cause		**Action**
1	Resistance in the installation is too high	Check if not all (thermostatic) radiator valves are closed or clogged with dirt
2	Water pressure is too low in the installation	Top up the system (→ subsection 2.1.1)
3	Problem with the pump or pump cabling (no circulation)	Check if the pump cabling is faulty or if the pump is stuck. Replace pump when necessary (→ subsection 5.3.6 and subsection 5.3.7)
4	Bi-sensor is dirty or faulty	Check the bi-sensor for dirt. Measure if resistance over the sensor is correct. If not replace bi-sensor (→ subsection 5.3.8 and subsection 5.3.9)

Code	Meaning	
2P	***Non blinking fault code**: Bi-sensor rises faster than 5 K/sec.*	
Possible cause		**Action**
1	Resistance in the installation is too high	Check if not all (thermostatic) radiator valves are closed or clogged with dirt
2	Water pressure is too low in the installation	Top up the system (→ subsection 2.1.1)
3	Problem with the pump or pump cabling (no circulation)	Check if the pump cabling is faulty or if the pump is stuck. Replace pump when necessary (→ subsection 5.3.6 and subsection 5.3.7)
4	Bi-sensor is dirty or faulty	Check the bi-sensor for dirt. Measure if resistance over the sensor is correct. If not replace bi-sensor (→ subsection 5.3.8 and subsection 5.3.9)

Code	Meaning	
2U	***Non blinking fault code**: Temp. difference between the bi-sensor and the return sensor is greater than 50 K*	
Possible cause		**Action**
1	Resistance in the installation is too high	Check if not all (thermostatic) radiator valves are closed or clogged with dirt
2	Water pressure is too low in the installation	Top up the system (→ subsection 2.1.1)
3	Problem with the pump or pump cabling (no circulation)	Check if the pump cabling is faulty or if the pump is stuck. Replace pump when necessary (→ subsection 5.3.6 and subsection 5.3.7)
4	Bi-sensor is dirty or faulty	Check the bi-sensor for dirt. Measure if resistance over the sensor is correct. If not replace bi-sensor (→ subsection 5.3.8 and subsection 5.3.9)
5	Return sensor may be faulty	Check return sensor and when necessary replace sensor (→ subsection 5.3.8)

Code	Meaning	
3A	***Non blinking fault code**: No communication between fan and UBA*	
Possible cause		**Action**
1	Faulty cable or connection	Check the cabling and connections and replace when necessary (→ subsection 5.3.3)
2	Fan is defect	Replace fan (→ subsection 5.3.3)

Code	Meaning	
3L	***Blinking fault code**: Fan signal not detected at power up stage*	
Possible cause		**Action**
1	Faulty cable or connection	Check the cabling and connections and replace when necessary (→ subsection 5.3.3)
2	Fan is defect	Replace fan (→ subsection 5.3.3)

Code	Meaning	
3P	***Blinking fault code**: Fan running too slow*	
Possible cause		**Action**
1	Fan may be dirty	Check fan for dirt (→ subsection 5.3.3)
2	Power supply may be faulty	Check the power supply
3	Fan wiring or connections faulty	Check the fan wiring and connections (→ subsection 5.3.3)

Code	Meaning	
3Y	***Blinking fault code**: Fan running too fast*	
Possible cause		**Action**
1	Fan wiring or connections faulty action	Check the fan wiring and connections (→ subsection 5.3.3)
2	Power supply may be faulty	Check power supply
3	Flue gas system may be dirty	Check the flue gas system (→ subsection 5.3.1)
4	Problem with the fan, heat exchanger, burner	Check the fan, heat exchanger and burner for dirt

Code	Meaning	
4A	***Blinking fault code**: Flow sensor exceeds 105 °C*	
Possible cause		**Action**
1	Resistance in the installation is too high	Check if not all (thermostatic) radiator valves are closed or clogged with dirt
2	Water pressure is too low in the installation	Top up the system (→ subsection 2.1.1)
3	Problem with the pump or pump cabling (no circulation)	Check if the pump cabling is faulty or if the pump is stuck. Replace pump when necessary (→ subsection 5.3.6 and subsection 5.3.7)
4	Bi-sensor is dirty or faulty	Check the bi-sensor for dirt. Measure if resistance over the sensor is correct. If not replace bi-sensor (→ subsection 5.3.8 and subsection 5.3.9)

Code	Meaning	
4E	***Blinking fault code**: Bi-sensor not working*	
Possible cause		**Action**
1	Bi-sensor is faulty	Replace bi-sensor (→ subsection 5.3.9)

Code	Meaning	
4F	***Blinking fault code**: Flow sensor exceeds 100 °C*	
Possible cause		**Action**
1	Resistance in the installation is too high	Check if not all (thermostatic) radiator valves are closed or clogged with dirt
2	Water pressure is too low in the installation	Top up the system (→ subsection 2.1.1)
3	Problem with the pump or pump cabling (no circulation)	Check if the pump cabling is faulty or if the pump is stuck. Replace pump when necessary (→ subsection 5.3.6 and subsection 5.3.7)
4	Bi-sensor is dirty or faulty	Check the bi-sensor for dirt. Measure if resistance over the sensor is correct. If not replace bi-sensor (→ subsection 5.3.8 and subsection 5.3.9)

Code	Meaning	
4L	***Blinking fault code**: Wiring or connections or sensor exceeds 130 °C*	
Possible cause		**Action**
1	Resistance in the installation is too high	Check if not all (thermostatic) radiator valves are closed or clogged with dirt
2	Water pressure is too low in the installation	Top up the system (→ subsection 2.1.1)
3	Problem with the pump or pump cabling (no circulation)	Check if the pump cabling is faulty or if the pump is stuck. Replace pump when necessary (→ subsection 5.3.6 and subsection 5.3.7)
4	Bi-sensor is dirty or faulty	Check the bi-sensor for dirt. Measure if resistance over the sensor is correct. If not replace bi-sensor (→ subsection 5.3.8 and subsection 5.3.9)

Code	Meaning	
4P	***Blinking fault code**: Bi-sensor has a loose connection or is defective*	
Possible cause		**Action**
1	Bi-sensor faulty or disconnected	Check the sensor and measure if resistance over the sensor is correct. If not replace bi-sensor (→ subsection 5.3.8 and subsection 5.3.9)
2	A short or bad connection in the cable harness	Check the cable harness and/or connector of the sensor
3	UBA might be faulty	Check the UBA by temporarily connecting a different UBA (→ subsection 5.3.2)

Code	Meaning	
4U	***Blinking fault code**: Short circuit in bi-sensor*	
Possible cause		**Action**
1	Bi-sensor is dirty or faulty	Check the sensor, replace when necessary (→ subsection 5.3.8 and subsection 5.3.9)
2	A short or bad connection in the cable harness	Check the cable harness and/or connector of the sensor
3	UBA might be faulty	Check the UBA by temporarily connecting a different UBA (→ subsection 5.3.2)

Code	Meaning	
4Y	***Blinking fault code**: Bi-sensor interrupted*	
Possible cause		**Action**
1	Bi-sensor faulty or disconnected	Check the sensor and measure if resistance over the sensor is correct. If not replace bi-sensor (→ subsection 5.3.8 and subsection 5.3.9)
2	A short or bad connection in the cable harness	Check the cable harness and/or connector of the sensor
3	UBA might be faulty	Check the UBA by temporarily connecting a different UBA (→ subsection 5.3.2)

Code	Meaning	
6A	***Blinking fault code**: No ionisation message after ignition*	
Possible cause		**Action**
1	There is no flame, ignition unit doesn't glow, fan is turning	– Check wiring of the ignition unit, measure the resistance of the ignition unit (should be between 50 and 300 Ω). Replace ignition unit when necessary (→ subsection 5.3.11 and subsection 5.3.12) – Check the UBA's F1 fuse, replace when necessary
2	There is no flame, ignition unit does glow, fan isn't turning	– Check the fan and KIM connectors and the UBA fuses
3	There is no flame, ignition unit and fan are working	– Check and adjust the gas/air ratio (→ subsection 2.1.8) – Check for 24 V~ on the gas valve during start up – Check the gas-supply pressure (→ subsection 2.1.7), this should be higher than 20 mbar for natural gas. – Check the earthing cable connections (yellow/green wire). – Check the cabling on the ionisation electrode
4	There is a flame, but the flame disappears when the fan starts up	– Check the gas-supply pressure (→ subsection 2.1.7), this should be higher than 20 mbar for natural gas. – Check and adjust the gas/air ratio (→ subsection 2.1.8) – Check the earthing cable connections (yellow/green wire) – Check the cabling on the ignition unit – Press reset. If fault code remains then try to temporarily connect a different UBA (→ subsection 5.3.2)

Code	Meaning	
6C	***Blinking fault code**: Ionisation message, but no flame*	
Possible cause		**Action**
1	There is no flame, ignition unit doesn't glow, fan is turning	– Check wiring of the ignition unit, measure the resistance of the ignition unit (should be between 50 and 300 Ω). Replace ignition unit when necessary (→ subsection 5.3.11 and subsection 5.3.12) – Check the UBA's F1 fuse, replace when necessary
2	There is no flame, ignition unit does glow, fan isn't turning	– Check the fan and KIM connectors and the UBA fuses
3	There is no flame, ignition unit and fan are working	– Check and adjust the gas/air ratio (→ subsection 2.1.8) – Check for 24V – on the gas valve during start up – Check the gas-supply pressure (→ subsection 2.1.7), this should be higher than 20 mbar for natural gas. – Check the earthing cable connections (yellow/green wire). – Check the cabling on the ignition unit
4	There is a flame, but the flame disappears when the fan starts up	– The gas valve doesn't close properly. If there is still more than 20 V~ on the gas valve when there is no heat demand then check the UBA by temporarily connecting a different UBA. – Check ionisation electrode/circuit (→ subsection 2.1.11 and subsection 5.3.13) – When both the UBA and the ionisation electrode/circuit are OK, then replace the gas valve – Press reset. If fault code remains than try to temporarily connect a different UBA (→ subsection 5.3.2)

Code	Meaning	
6L	***Blinking fault code**: Flame goes out during operation*	
Possible cause		**Action**
1	Gas/air ratio not in order	Check and adjust the gas/air ratio (→ subsection 2.1.8)
2	Wrong gas supply pressure	Check the gas-supply pressure (→ subsection 2.1.7)
3	Earthing cable may be faulty	Check the earthing cable connections (yellow/green wire)
4	Ionisation electrode may be faulty	Check the cabling on the ionisation electrode, check the ionisation electrode and replace when necessary (→ subsection 2.1.11 and subsection 5.3.13).
5	Recirculation of flue gas	Check the flue gas system
6	Gas valve shuts down during operation	Check connections and wiring of the gas valve and replace when necessary

Code	Meaning	
6P	***Blinking fault code**: Ignition unit has been on too long*	
Possible cause		**Action**
1		Try to reset the boiler by pressing the reset button for 2 seconds
2	KIM may be defect	Check if UBA 3 is fitted tightly onto the boiler (→ subsection 5.3.2). If this is the case then contact the Buderus service department.

Code	Meaning	
7C	***Blinking fault code**: Mains supply interrupted*	
Possible cause		**Action**
1	A problem with the mains supply	Carry out a power test procedure for safe testing of the mains electrical supply
2	Reset button pressed too briefly	Press the Reset button for two seconds

Code	Meaning	
7L	***Blinking fault code**: Internal UBA error*	
Possible cause		**Action**
1	Bad UBA connection	Check UBA connector
	UBA may be defective	Replace UBA (→ subsection 5.3.2)
	KIM may be defective	Call the service department of Buderus

Code	Meaning	
8Y	***Blinking fault code**: External switch contact is open*	
Possible cause		**Action**
1	External switch contact (e.g. temperature-monitoring device for underfloor heating has been tripped or gas pressure too low	– Check wiring and connections of the external switch contact – Check the external switch contact

Code	Meaning	
9A; 9H; 9U; P	***Blinking fault code**: System error*	
Possible cause		**Action**
1	UBA not placed correctly	Check to see if UBA is securely mounted (→ subsection 5.3.2)
2	UBA may be defective	Press reset. If fault code remains then try to temporarily connect a different UBA (→ subsection 5.3.2)
3	KIM may be defective action	Call the service department of Buderus

Code	Meaning	
9L	***Blinking fault code**: Gas valve assembly error*	
Possible cause		**Action**
1	Wiring to the gas valve incorrect, or loose wiring connections in UBA	– Check the electrical connections of the gas valve. – Measure the resistance of the gas valve – Check if for example induction fields interfere with the regulating device
2	UBA may be defective	Press reset. If fault code remains then try to temporarily connect a different UBA (→ subsection 5.3.2)
3	KIM may be defective	Call the service department of Buderus

Code	Meaning	
CA	***Blinking fault code**: Return sensor exceeds 105 °C*	
Possible cause		**Action**
1	Resistance in the installation is too high	Check if not all (thermostatic) radiator valves are closed or clogged with dirt
2	Water pressure is too low in the installation	Top up the system (→ subsection 2.1.1)
3	Problem with the pump or pump cabling (no circulation)	Check if the pump cabling is faulty or if the pump is stuck. Replace pump when necessary (→ subsection 5.3.6 and subsection 5.3.7)
4	Return sensor is dirty or faulty	Check the return sensor for dirt. Measure if resistance over the sensor is correct. If not replace return sensor (→ subsection 5.3.8)

Code	Meaning	
C0	***Blinking fault code**: Pressure sensor fault*	
Possible cause		**Action**
1	Wiring and connections of the pressure sensor may be faulty	Check the wiring and connection of the pressure sensor
2	Pressure sensor may be faulty	Check the pressure sensor and replace when necessary

Code	Meaning	
CU; CY	***Blinking fault code**: Short circuit in return sensor or interrupted*	
Possible cause		**Action**
1	Wiring and connections of the return sensor may be faulty	Check wiring and connections of the return sensor
2	Return sensor may be faulty	Check return sensor and replace when necessary

Code	Meaning	
E1; A; C; F; H; L; Y	***Non blinking fault code**: Internal UBA error*	
Possible cause		**Action**
1	Regulating device may have to cope with interference	– Check if for example induction fields interfere with the regulating device – Check if the are any peaks in the electrical network caused by maybe windmills or a power generator
2	UBA may be defective	– Press reset. If fault code remains then try to temporarily connect a different UBA (→ subsection 5.3.2) – Check if UBA 3 is correctly mounted (→ subsection 5.3.2)

Code	Meaning	
H07	***Non blinking fault code**: System pressure too low*	
Possible cause		**Action**
1	System pressure too low	Top up the system (→ subsection 2.1.1)
2	Pressure sensor may be defect	Check the pressure sensor

Problem: *No DHW, despite the system being operational*
– Check three-way valve replace when necessary
– Check DHW sensor and replace when necessary

Problem: *No heating, despite that there is a demand for heat and the boiler is operational*
– Check regulating device configuration and/ or the wiring
– Check the wiring between the regulating device and the UBA
– Check all the wiring
– Check the UBA and replace when necessary (→ subsection 5.3.2)

5.3 Checking and replacing parts

5.3.1 Checking and replacing the flue gas sensor

- Shut the boiler down by setting the mains switch to "0".
- Remove the casing.
- Remove the ventilation cover.
- Remove both plugs from the flue gas thermostat (→ fig. 65).

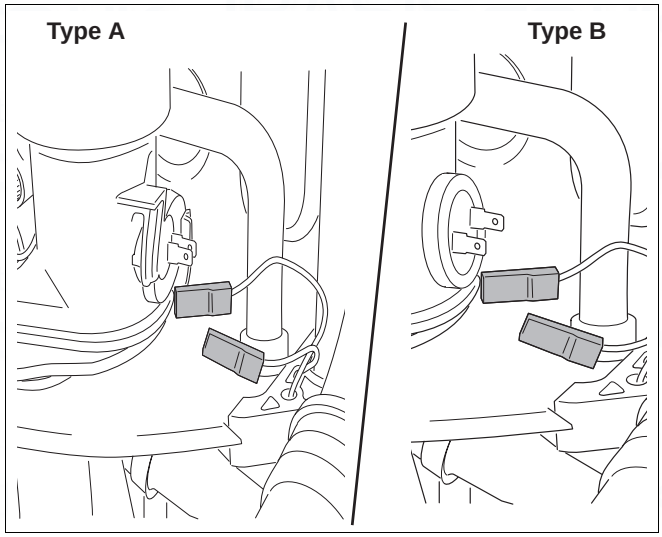

fig. 65 Remove plugs from flue gas thermostat

- Measure the resistance of the flue gas thermostat (→ fig. 66).
- Measure the temperature of the flue gas. Compare the outcome to the measured resistance using the table below.

Flue gas thermostat		
Temperature	**Position**	**Resistance in Ω**
≤ 105 °C	open	0
> 105 °C	closed	endless high

table 10 Flue gas thermostat

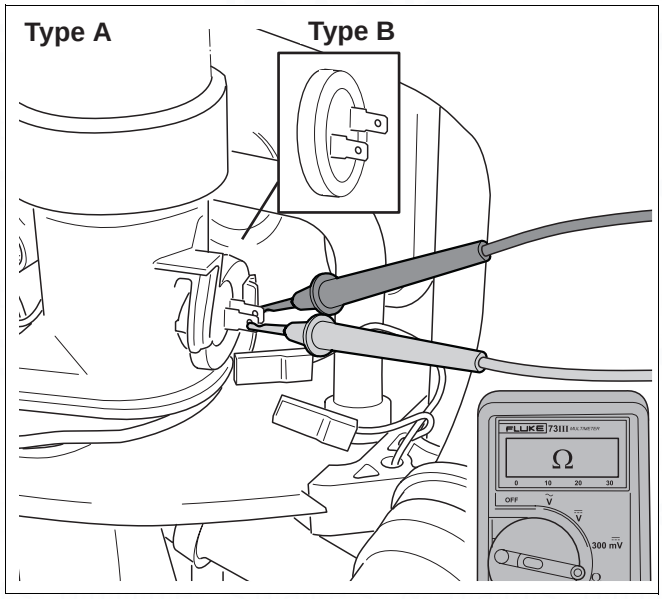

fig. 66 Measure flue gas thermostat resistance

- Remove the UBA 3 (→ fig. 67) to test the cable's resistance (→ fig. 68).
- Remove the flue gas sensor when necessary by pulling it out.
- Install the new flue gas sensor in reverse order.

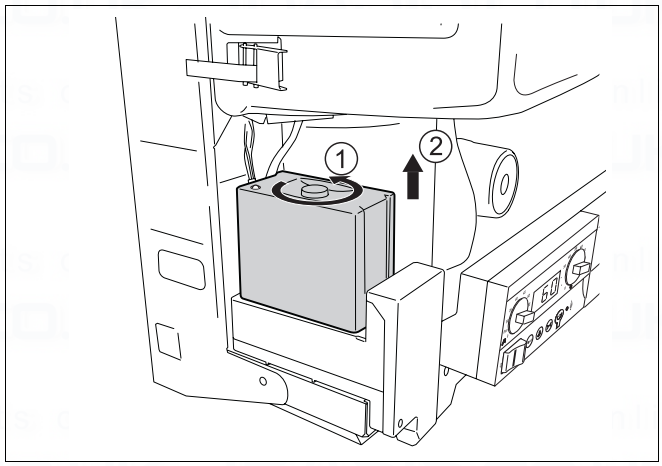

fig. 67 Remove UBA 3

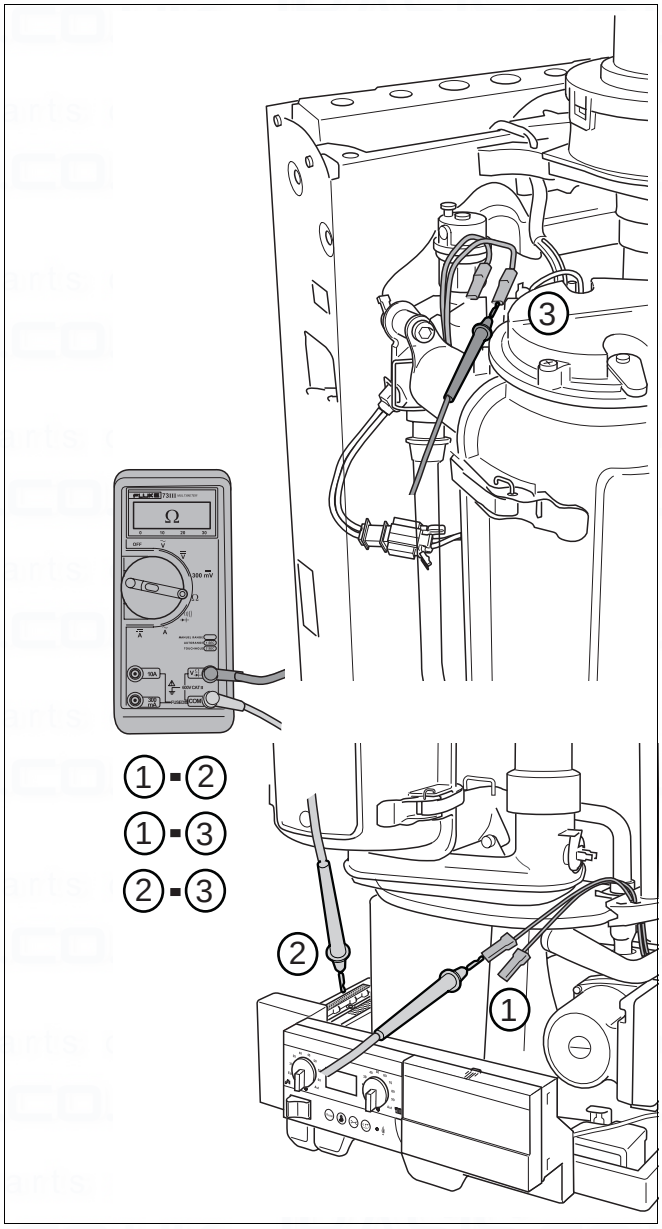

fig. 68 Measure cable resistance

5.3.2 Remove or replace the UBA 3

- Disconnect the system from the mains power supply.
- Loosen the screw (→ fig. 69, item 1) and remove the UBA 3 (→ fig. 69, item 2). When necessary install a new UBA 3 and secure by tightening the screw.
- Connect system to mains power supply.

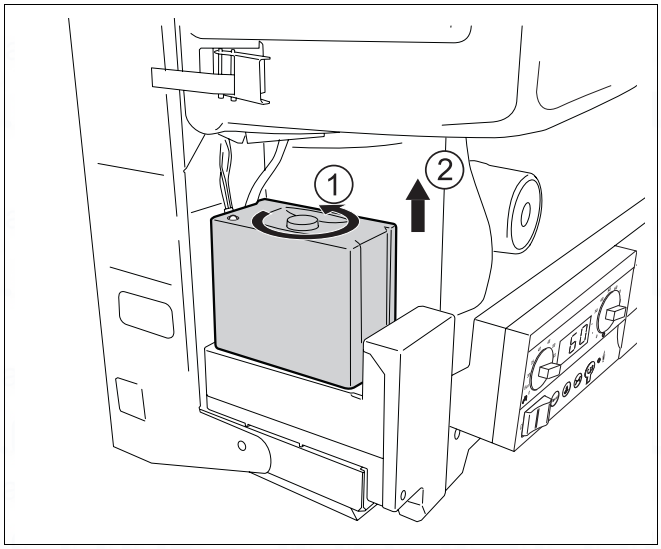

fig. 69 Remove UBA 3

5.3.3 Checking or replacing the fan

- Disconnect the system from the mains power supply.
- Remove casing and ventilation cover.
- Set multimeter to VAC.
- Remove the 230 VAC plug (→ fig. 70) from the fan.
- Connect the multimeter to the blue and brown connections.
- Connect the system to the mains power supply.
- Check if there is 230 VAC on the connections when the operating code "0C" appears in the display.
- If necessary remove the UBA (→ fig. 69) and set the multimeter to measuring resistance. The resistance of each pole should be 0 Ω.
- Reconnect the cable.

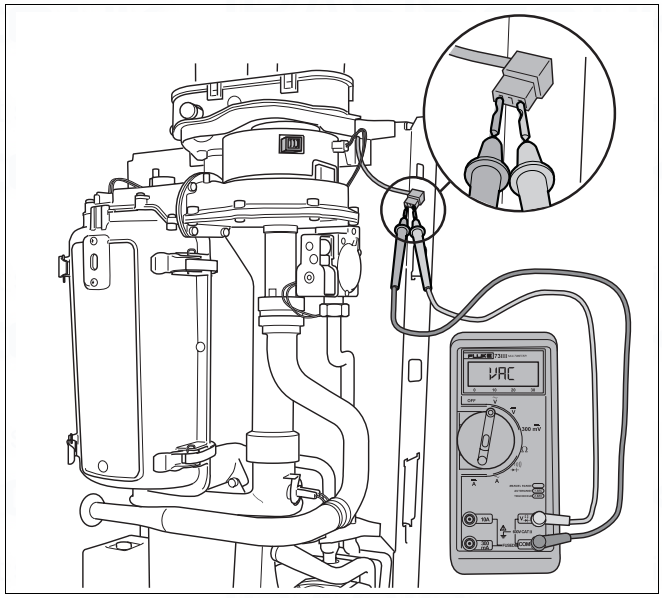

fig. 70 Remove 230 VAC plug

- If necessary measure the resistance over the tachoplug (→ fig. 71) in the same manner.
- If the problem is still not solved then replace the fan.

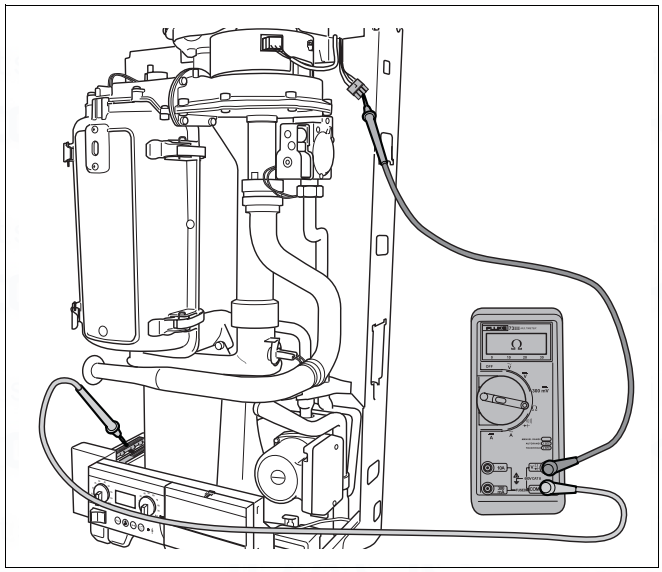

fig. 71 Measure resistance of tachoplug

- Disconnect the plug from the gas valve (→ fig. 72, item 1).
- Loosen the swivel nut (→ fig. 72, item 2)
- Remove the suction tube (→ fig. 72, item 3).

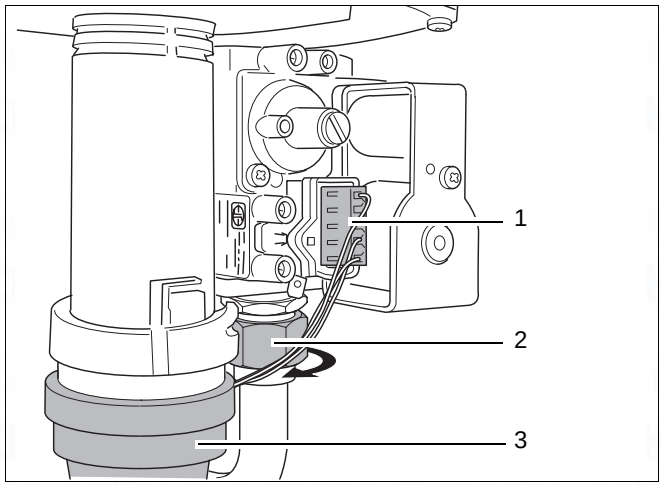

fig. 72 Remove suction tube

- Remove both plugs from the fan (→ fig. 73, item 1) and the nut (→ fig. 73, item 2).

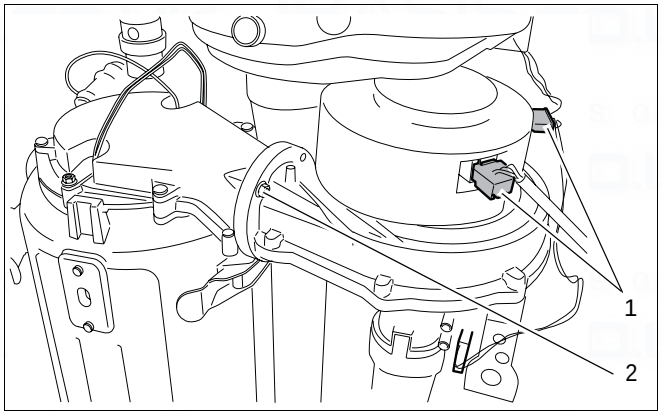

fig. 73 Remove plugs and nut

- Remove the fan by moving it in the direction of the arrow (→ fig. 74).
- Check if the fan is dirty, wet or if the impellor is loose to the axle.

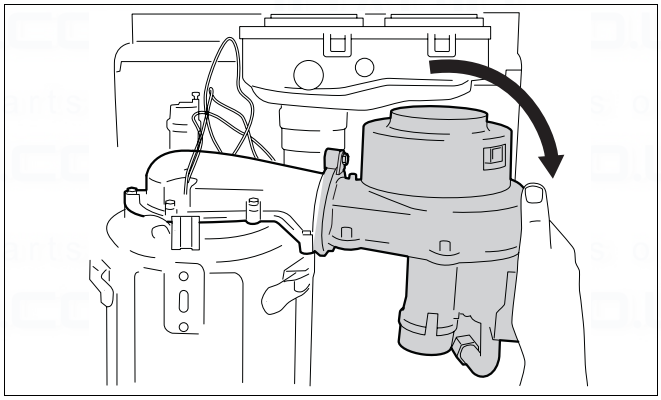

fig. 74 Remove fan

- Remove the gas valve (→ fig. 75).

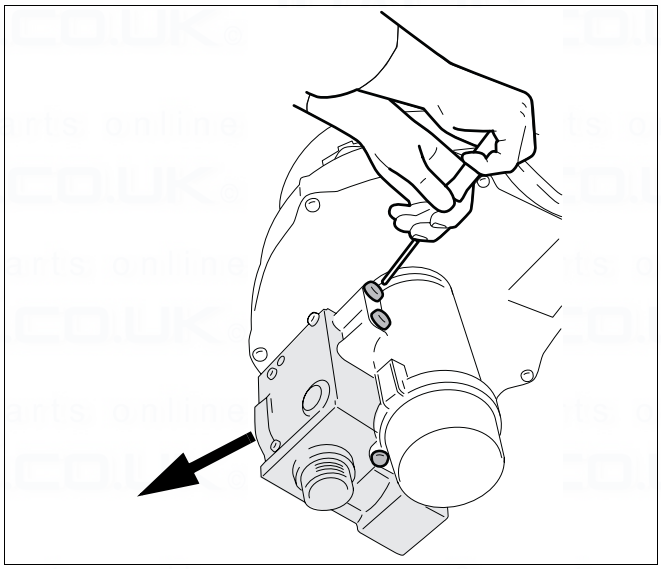

fig. 75 Remove gas valve

- Remove the venturi (→ fig. 76).
- Insert the venturi into the new fan.
- Place a new flat seal between the gas pipe and the gas valve.
- Reassemble in reverse order.
- Check all couplings for leaks.

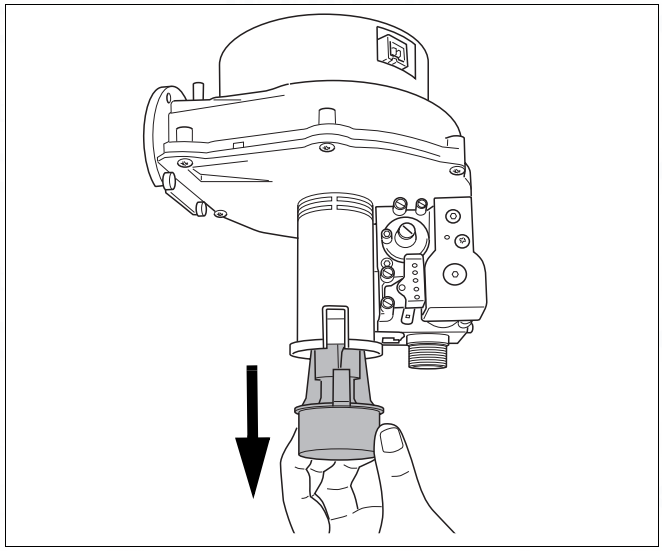

fig. 76 Remove venturi

5.3.4 Checking the mains supply

If the mains supply is interrupted or seems faulty, carry out a power test procedure for safe testing of the mains electrical supply.

- Loosen the screw (→ fig. 69, item 1) and remove the UBA (→ fig. 69, item 2).
- Carry out the power test on position 15 and 16 of the high voltage pin connector (→ fig. 69, item 3).
- Refit the UBA and tighten the screw.

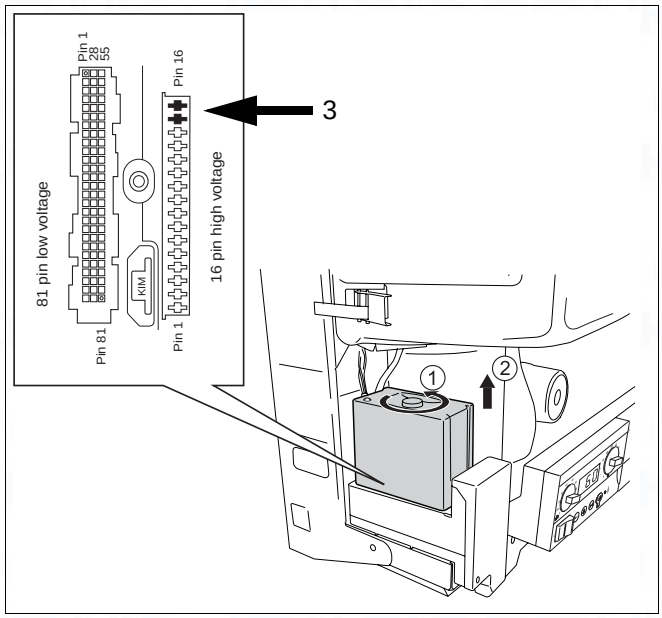

fig. 77 Checking the mains supply

5.3.5 Checking the fuse

- Disconnect the system from the mains power supply.
- Remove the UBA (→ fig. 69).
- Release the fuse clamp (→ fig. 78, item 2) by turning it to the left with a screw driver.
- Remove and check the fuse (→ fig. 78, item 1).
- Replace with a new fuse (5 AF) if necessary.
- Reassemble in reverse order.

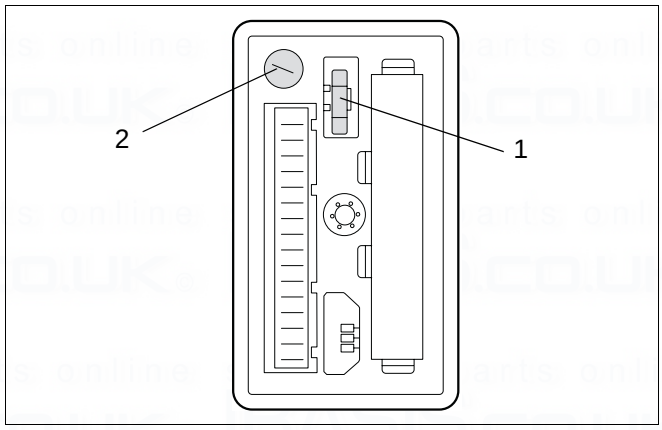

fig. 78 Checking the fuse

5.3.6 Checking the pump

- Remove screw plug on the pump (→ fig. 79).
- Turn the mains power switch to "**I**".
- Wait about 4 minutes until "2L" appears in the display.
- Check to ensure that the pump is running. The pump's running mechanism may become blocked if the heating system has been out of use for an extended period. Use a screwdriver to rotate the pump in its normal running direction and release the blockage in question. If this procedure does not work, replace the pump.
- If the pump is working correctly, screw the plug back in.

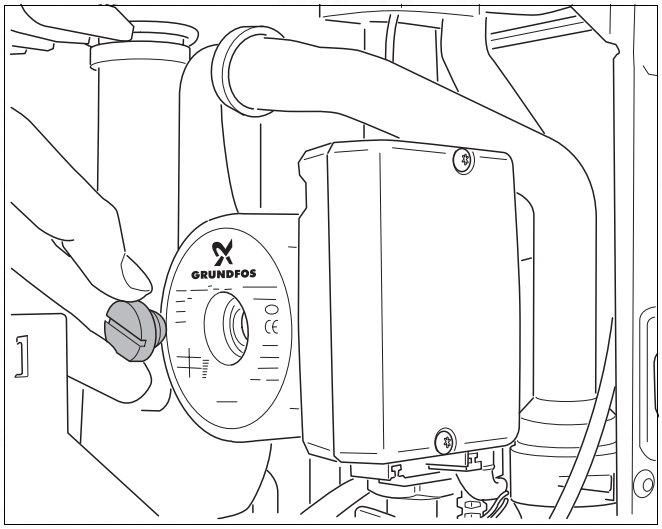

fig. 79 Checking the pump

5.3.7 Replacing the pump

- Disconnect the system from the power supply.
- Shut the servicing valve.
- Drain the system (→ page 23).
- Loosen both swivel nuts (→ fig. 80, item 1)
- Take out the pump.
- Replace it with new pump and reassemble in reverse order.
- Purge the system and the pump of air.
- Connect system to mains power supply.
- Open servicing valves.

NOTE
Fill the Buderus 600 - 28C and purge the system of air.

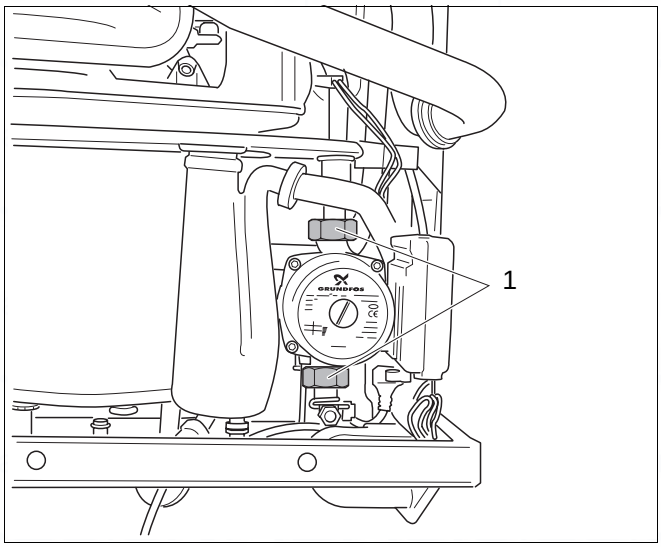

fig. 80 Replacing the pump

5.3.8 Checking the bi-sensor, return sensor and hot water sensors.

- Remove the cable connection (→ fig. 81) of the bi-sensor.

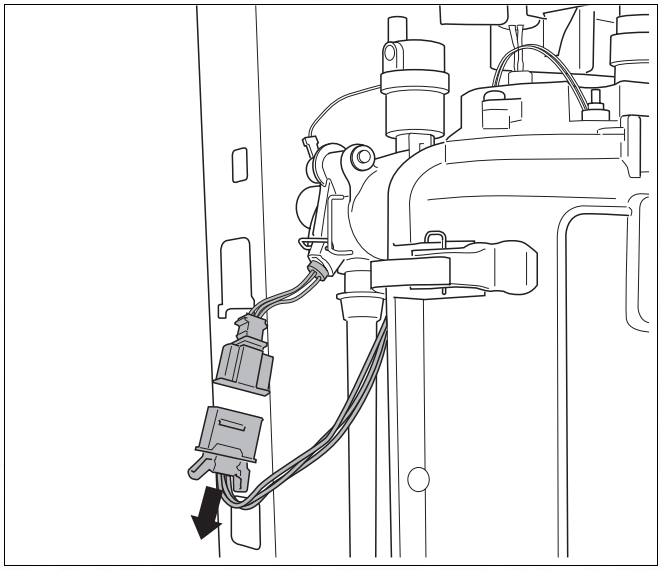

fig. 81 Remove cable connection of bi-sensor

- Measure the resistance of both parts of the bi-sensor (→ fig. 82).

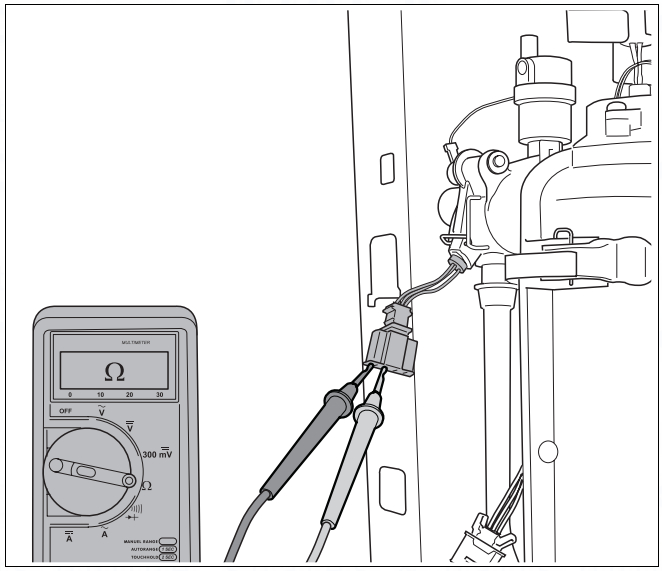

fig. 82 Measure resistance of bi-sensor

- Disconnect the return sensor (→ fig. 83).

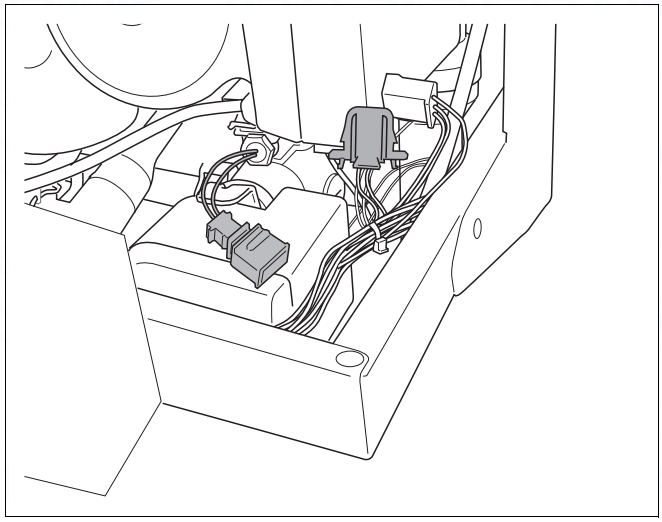

fig. 83 Disconnect return sensor

- Measure the resistance of the return sensor (→ fig. 84).

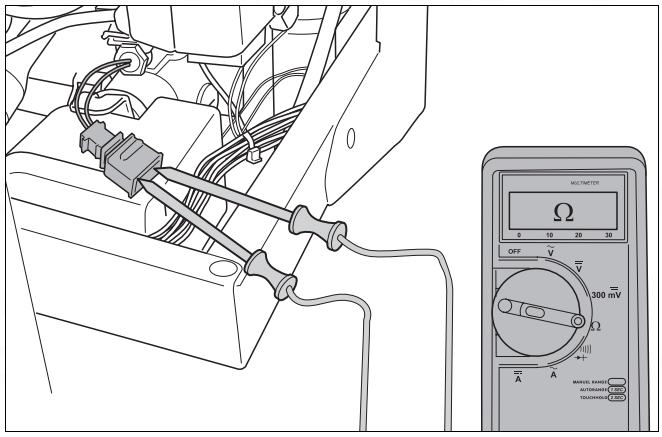

fig. 84 Measure resistance return sensor

- Disconnect the plugs of the hot water out flow sensor (→ fig. 85, item 1) and the hot water heat retaining sensor (→ fig. 85, item 2).

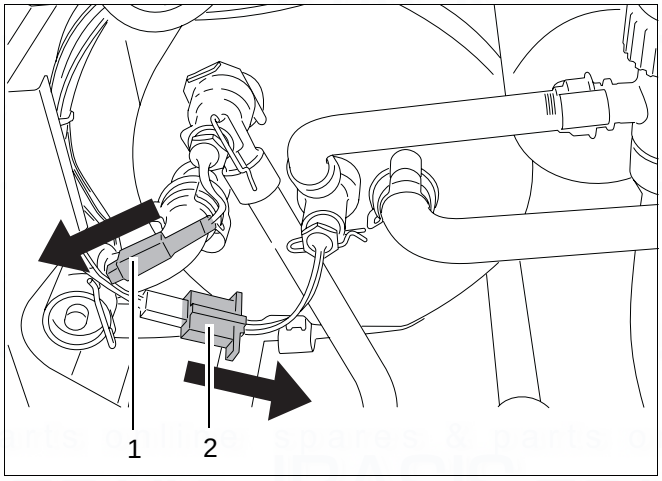

fig. 85 Disconnect plugs of hot water sensors

- Measure the resistance of both sensors (→ fig. 86 and fig. 87).
- Use a second-reading thermometer to measure the temperature around the sensor.
- Compare readings with values shown in the table below. If there is any mismatch (i.e. ≤ 10%), the sensor is defective.

Resistance values of the sensors			
Temperature [°C]	**Resistance [Ω]**	**Temperature [°C]**	**Resistance [Ω]**
0	29,490		
5	23,462	55	3,271
10	18,787	60	2,760
15	15,136	65	2,339
20	12,268	70	1,990
25	10,000	75	1,700
30	8,197	80	1,458
35	6,754	85	1,255
40	5,594	90	1,084
45	4,656	95	940
50	3,893	100	817

table 11 Resistance values of the sensors

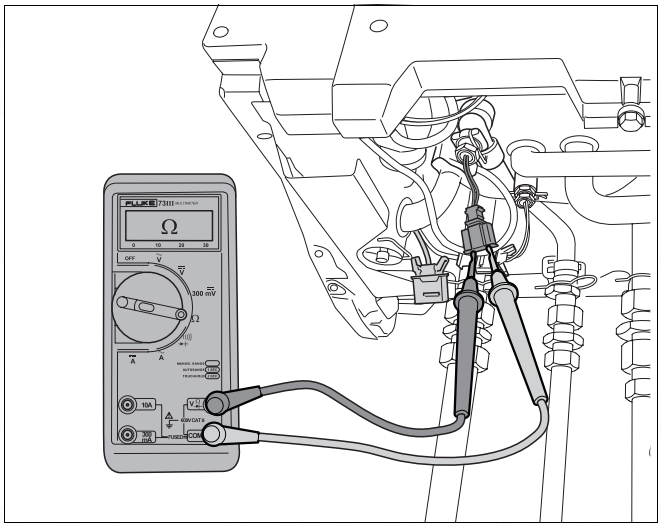

fig. 86 Measure resistance of hot water out flow sensor

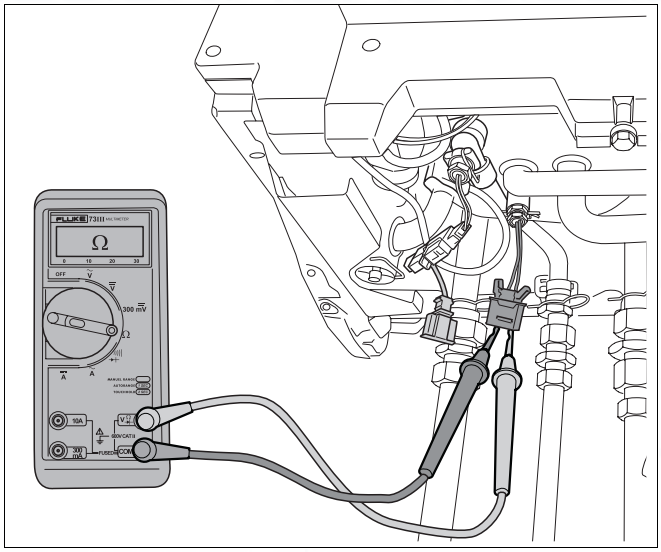

fig. 87 Measure resistance of hot water heat retaining sensor

- Check each sensor's cable by measuring its resistance (→ fig. 87, 88, 89 and 90).

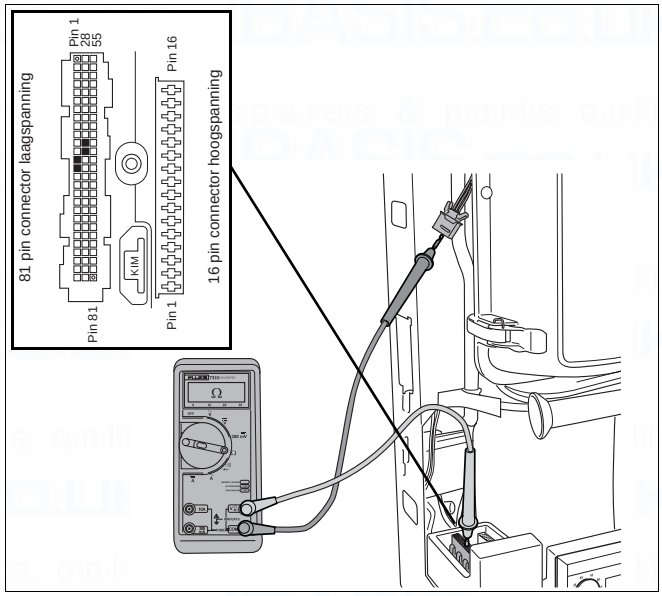

fig. 88 Measure resistance of bi-sensor

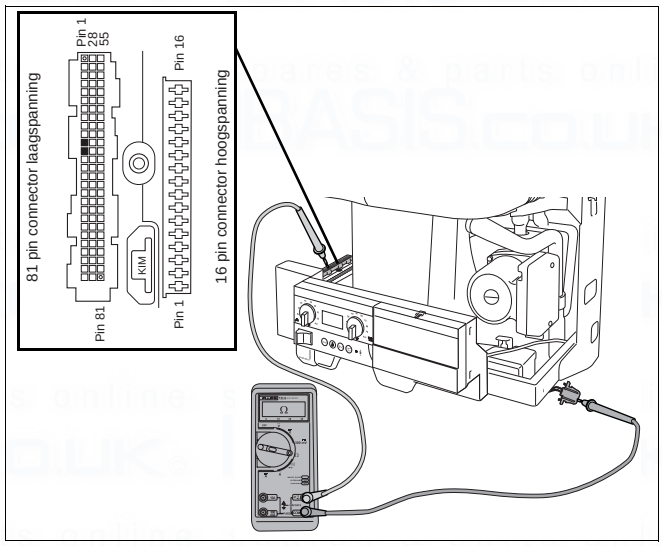

fig. 89 Measure resistance of return sensor

- Reconnect all cables and connections.

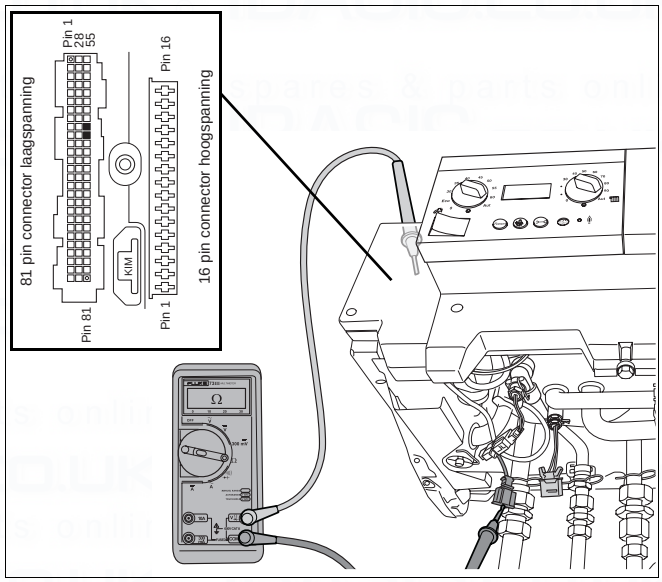

fig. 90 Measure resistance of hot water heat retaining sensor

5.3.9 Replacing the bi-sensor

- Disconnect the boiler form the mains power supply.
- Close gas valve.
- Drain the system (→ page 23).
- Disconnect the plug of the bi-sensor (→ fig. 91, item 1).
- Remove spring clip (→ fig. 91, item 2)
- Remove the bi-sensor (→ fig. 91, item 3).
  Some remaining water may leak out.
- Replace with new sensor and reassemble in reverse order.
- Fill the system and purge the system of air
  (→ subsection 2.1.1).

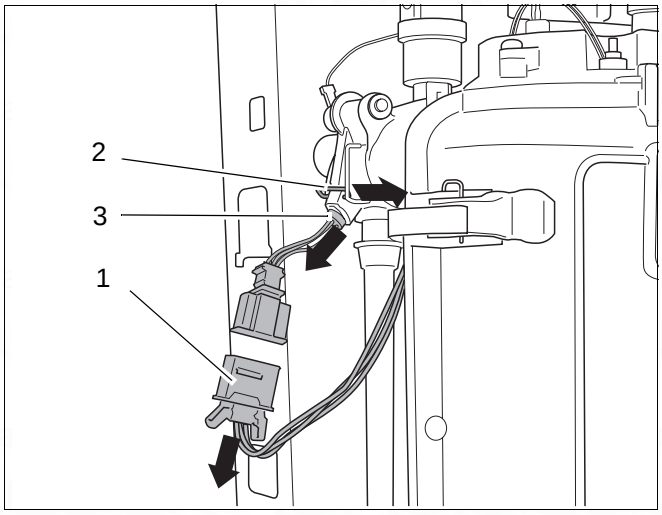

fig. 91 Replace bi-sensor

- Disconnect the boiler form the mains power supply.
- Close gas valve.
- Drain the system (→ page 23).
- Disconnect the plug of the return sensor (→ fig. 92).
- Remove the return sensor.
  Some remaining water may leak out.
- Replace with new sensor and reassemble in reverse order.
- Fill the system and purge the system of air
  (→ subsection 2.1.1).

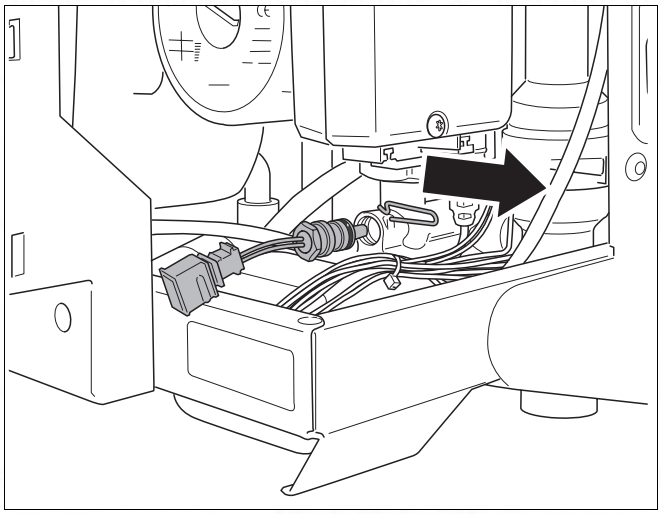

fig. 92 Disconnect plug return sensor

5.3.10 Replacing the hot water out flow sensor and the hot water heat retaining sensor.

- Disconnect the system from the mains power supply.
- Disconnect the plug of the hot water out flow sensor
  (→ fig. 93, item 1) or the hot water heat retaining sensor
  (→ fig. 93, item 2).
- Turn on the hot water faucet and wait until the water flowing out is cold.
- Turn off the the hot water faucet.
- Turn off the main DHW valve.
- Remove the spring clip(s).
- Remove the sensor(s) and replace with new ones.
- Connect the plugs.
- Turn on a warm water faucet.
- Open the main DHW valve and purge of air.
- Turn the warm water faucet off.
- Reconnect the system to the mains power supply.

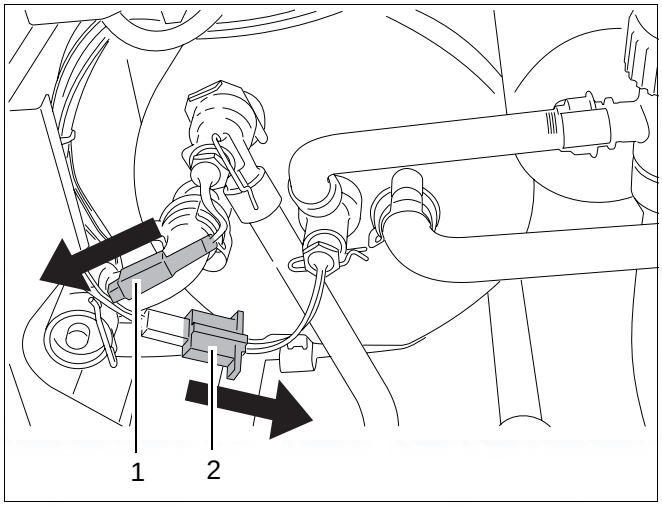

fig. 93 Disconnect plugs of hot water sensors

5.3.11 Checking the ignition unit

- Checking the ignition unit.
- Disconnect the boiler from the mains power supply.
- Disconnect the plug (→ fig. 94, item 1) of the ignition unit.
- Set multimeter to measuring VAC.
- Connect the boiler to the mains power supply and set in service mode (→ subsection 2.1.2).
- Check if you measure 120 VAC when the code "0C" is visible in the display.
- Disconnect the multimeter from the plug and set the multimeter to measuring resistance.
- Check if the resistance of the ignition unit is between 50 - 300 Ω.
- Disconnect the boiler from the mains power supply.
- Reconnect the plug to the ignition unit.
- Reconnect the boiler to the mains power supply.

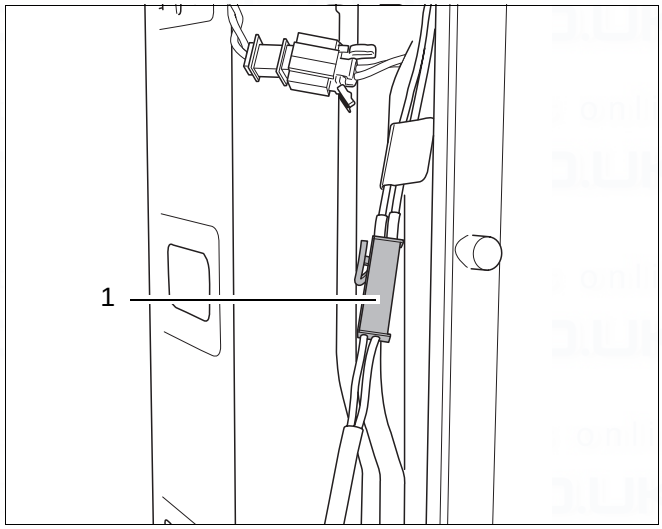

fig. 94 Disconnect plug of ignition unit

To check the connection lead to the UBA:

- Disconnect the boiler from the mains power supply.
- Remove the UBA 3 (→ subsection 5.3.2).
- Disconnect the plug of the ignition unit (→ fig. 94, item 1).
- Measure the resistance of the cable (→ fig. 95).
- Reconnect the plug of the ignition unit.
- Remount the UBA 3 and connect the boiler to the mains power supply.

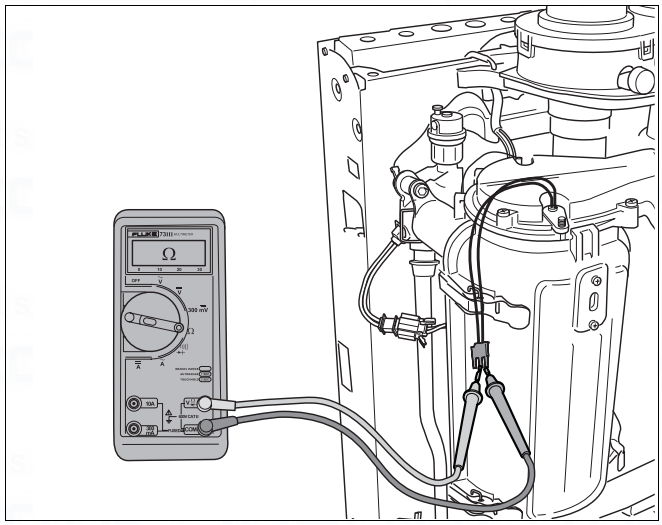

fig. 95 Measuring resistance of ignition unit

5.3.12 Replacing the ignition unit

- Disconnect the boiler from the mains power supply.
- Disconnect the plug of the ignition unit (→ fig. 94, item 1).
- Disconnect the ignition unit (→ fig. 96, items 1, 2 and 3).

CAUTION
Be careful, the ignition unit is made of ceramic material and can be damaged easily.

- Connect a new ignition unit with latch and nut in reverse order.
- Check all couplings for gas leaks.

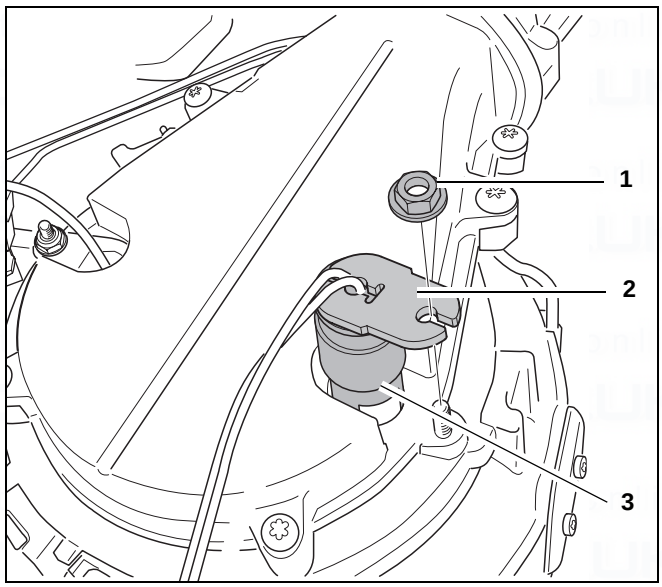

fig. 96 Replacing the ignition unit

5.3.13 Replacing the ionisation electrode

- Disconnect the boiler from the mains power supply.
- Disconnect the plug of the ionisation electrode (→ fig. 97).

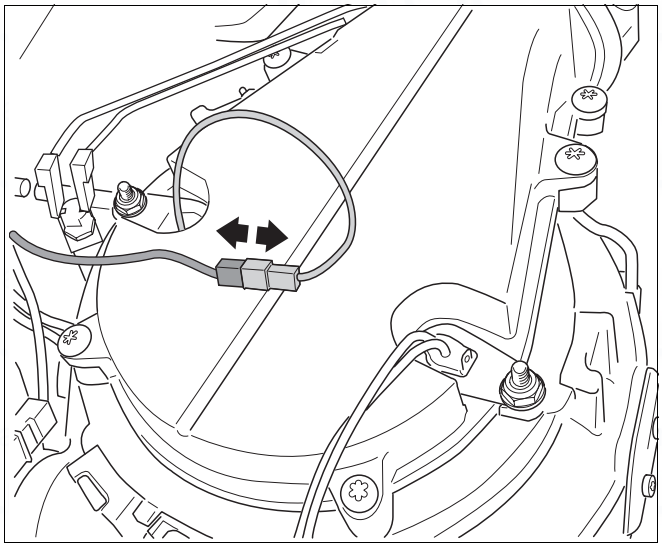

fig. 97 Disconnecting plug

- Remove the ionisation electrode (→ fig. 98, items 1, 2, 3 and 4).

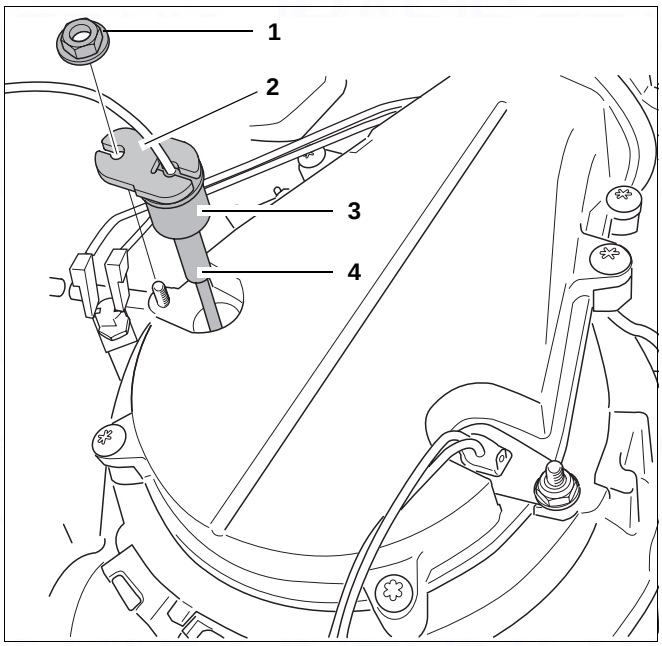

fig. 98 Remove ionisation electrode

- Measure the resistance of the ionisation electrode (→ fig. 99).

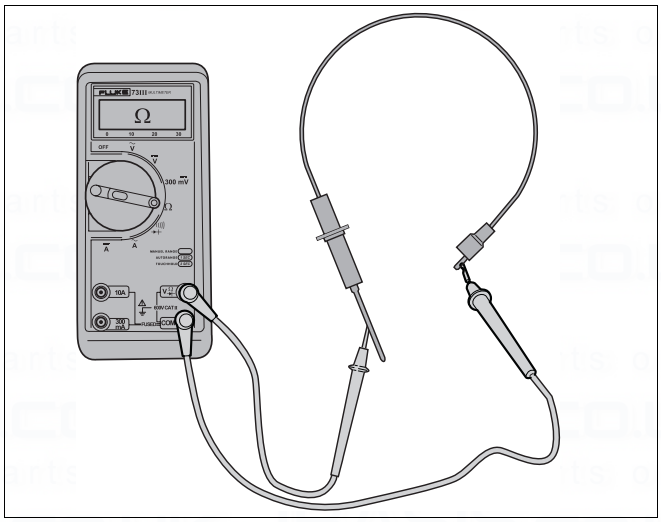

fig. 99 Measure resistance ionisation electrode

- Check if the ionisation electrode has been damaged, soiled or is shows signs of wear (→ fig. 100).
- Replace ionisation electrode if necessary.
- Place a new seal with latch and nut (→ fig. 98, items 2, 3 and 4).
- Reassemble in reverse order.
- Check all couplings for gas leaks.

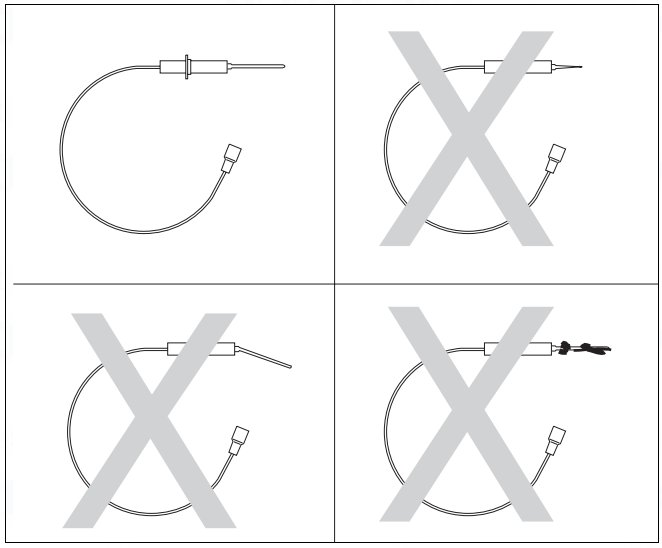

fig. 100 Check ionisation electrode

5.3.14 Checking the three-way valve for correct operation

- Set DHW temperature knob to "0".
- Disconnect the boiler from the mains power supply.
- Remove the securing pin (→ fig. 101, item 1) and remove the servomotor.
- Connect the boiler to the mains power supply.
- Set the DHW temperature knob on the BC10 to 60 °C.
- Open a warm water faucet.
- Check if the servomotor of the internal three way valve is turning to the DHW position.
- Set the DHW temperature knob to "0".
- Close the warm water faucet.
- Check if the servomotor of the internal three-way valve turns to the central heating position.
- Reconnect the the servomotor to the three-way valve in reverse order.
- Check to see if the BC10 knobs are returned to the desired settings.

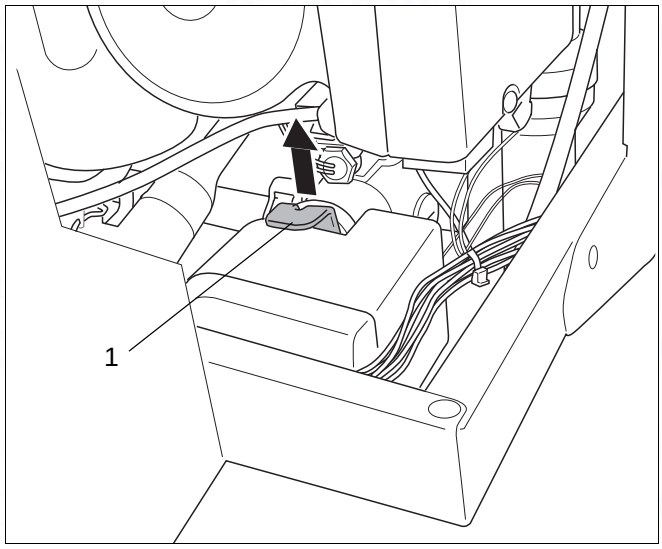

fig. 101 Remove securing pin

5.3.15 Replacing the servomotor of the three-way valve.

- Set DHW temperature knob to "0".
- Disconnect the boiler from the mains power supply.
- Remove the securing pin (→ fig. 101, item 1) and remove the servomotor.
- Disconnect the plug (→ fig. 102, item 1) of the servomotor.
- Install new servomotor in reverse order.
- Check to see if the BC10 knobs are returned to the desired settings.

5.3.16 Replacing the internal mechanism of the three-way valve

- Disconnect the system from the mains spower supply.
- Drain the system.
- Remove the securing pin (→ fig. 101, item 1).
- Remove the servomotor of the three-way valve.

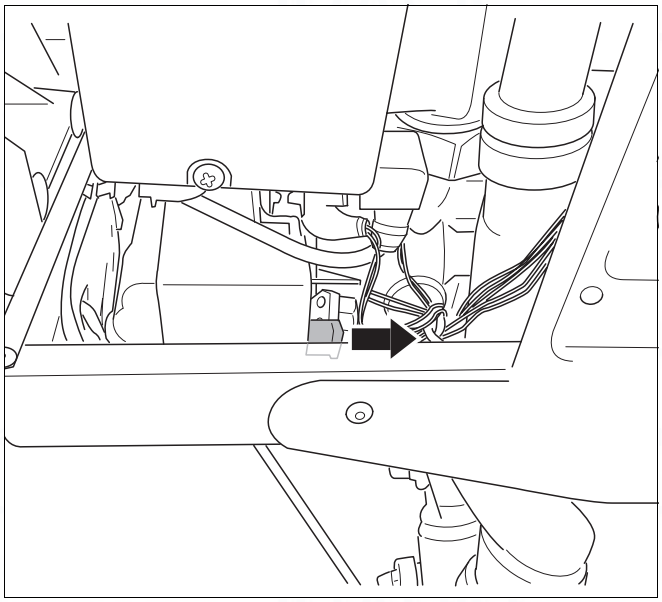

fig. 102 Disconnect plug

- Remove the internal mechanism of the three-way valve (→ fig. 103).

CAUTION
Some remaining water may come out.

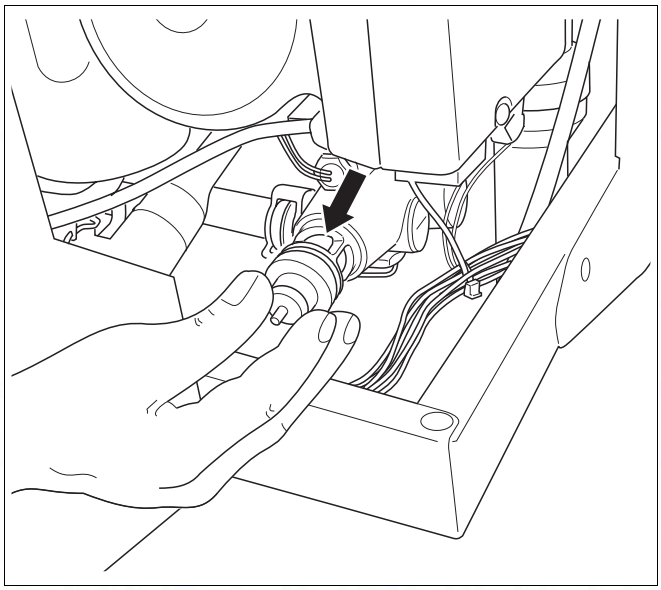

fig. 103 Remove the internal mechanism of three-way valve

- Install the new internal mechanism in reverse order. Making sure that the flat side is facing down (→ fig. 104).
- Reconnect the servomotor to the three-way valve in reverse order.
- Fill and purge the system (→ subsection 2.1.1).

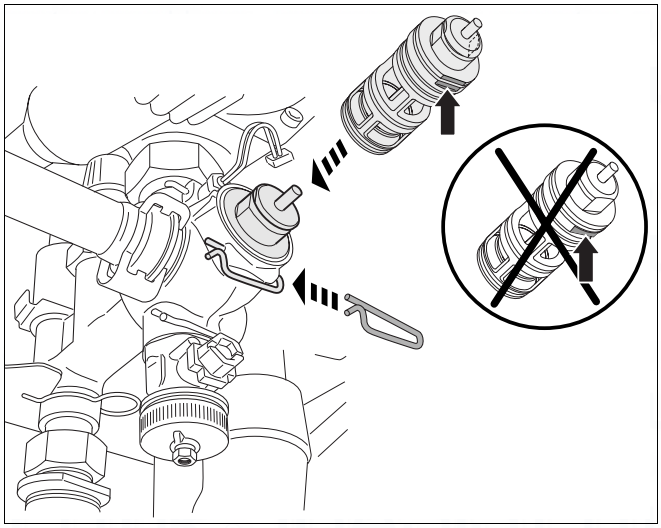

fig. 104 Internal mechanism of three-way valve

5.3.17 Replacing the terminal strip

- Note order of cable terminals. Loosen all cables.
- Connect the cables, in the right order, to the new terminal strip.

5.3.18 Checking KIM connections

- Disconnect the boiler from the mains power supply.
- Remove the UBA 3 (→ subsection 5.3.2).
- Check if 4 pin connector (→ fig. 105, item 1) is fitted and secure.

NOTE
This is not a serviceable part and any fault identified with this component, contact Buderus.

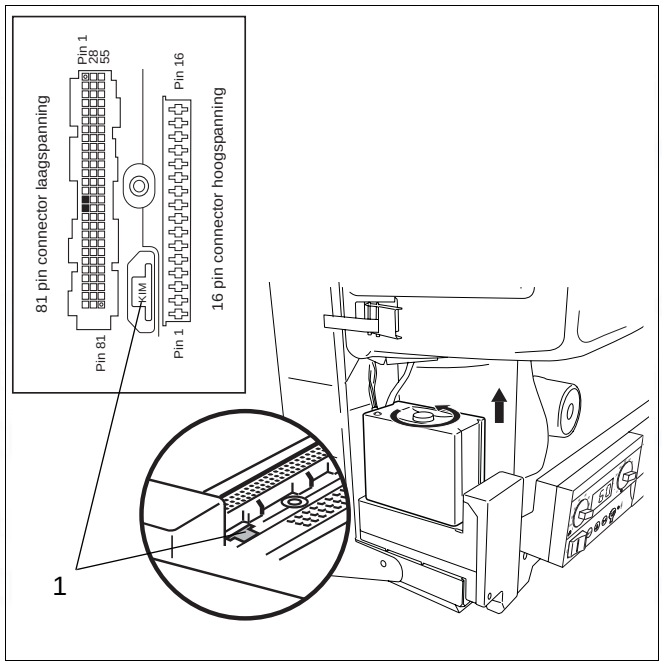

fig. 105 KIM connections

5.3.19 Checking the burner thermostat

- Disconnect the boiler from the mains power supply.
- Remove both plugs from the burner thermostat.
- Check the resistance of the burner thermostat.
  The resistance must be near 0 Ω (the switch temperature is approx. 165 °C).
- Connect both plugs to the burner thermostat.

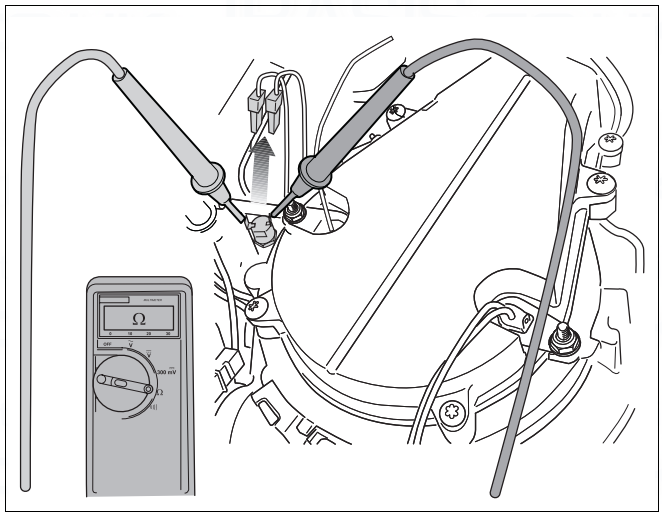

fig. 106 Remove plugs from the burner thermostat

5.3.20 Replacing the burner thermostat

- Disconnect the boiler from the mains power supply.
- Remove both plugs from the burner thermostat.

CAUTION
Lead the cable of the burner thermostat behind the heat exchanger (→ fig. 107).

- Unmount the burner thermostat.
- Mount the new burner thermostat at the same location as the old one was.
- Connect both plugs at the burner thermostat.
- Check all couplings for gas leaks.

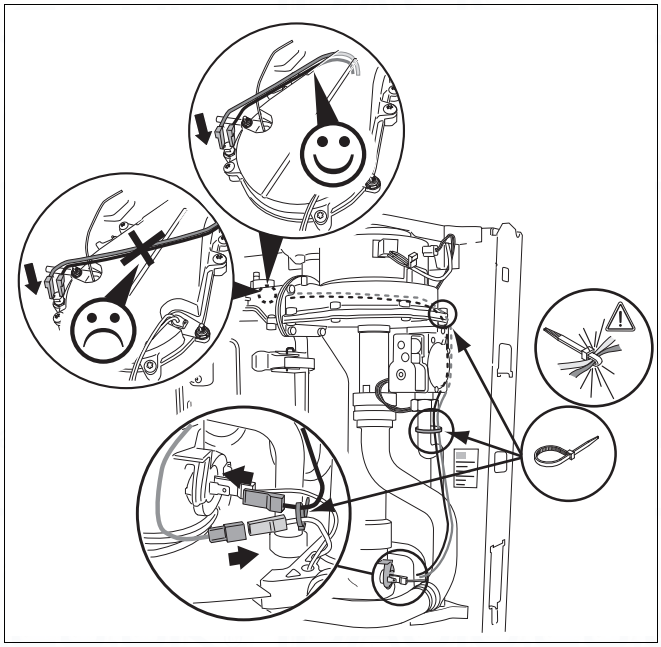

fig. 107 Leading the cable of the burner thermostat

6 Appendix

6.1 Technical specifications

Dimensions	Unit	gas wall hung boiler condensing Buderus 600 - 28C
Type of gas supply as established in EN 437 (GB/IE)		GB/IE II_{2H3P} 20 mbar, 37 mbar (natural gas **H** and LPG)
Rated thermal load for heating Rated thermal load for preparing hot water	kW kW	5.7 - 23.0 5.7 - 28.5
Rated heating capacity for system temperature (modulating from 30° to 100°) Heating curve 75/60 °C Heating curve 40/30 °C	 kW kW	 5.3 - 22.0 6.0 - 24.0
Seasonal efficiency (SEDBUK) for natural gas for LPG	% %	90.2 92.3
Max. gas rate for heating Max. gas rate preparing hot water	m^3/h m^3/h	2.43 3.02
Central heating installation		
Heating water temperature	°C	30 - 80
ΔT at residual head of 200 mbar	K	<20
Max. operating pressure of boiler	bar	3.0
Volume heat exchanger heating circuit	l	1.0
Pump over run time	min h	0 - 60 24
Expansion vessel		
Capacity of expansion vessel	l	12
Admission pressure of expansion vessel	bar	0.75
Hot water tank (type 24C)		
Hot water capacity of heat exchanger	l	0.95
Hot water flow at 60 °C (ΔT = 50 °C) (ΔT = 35 °C)	l/min l/min	7.8 13.0
Adjustable hot water temperature	°C	30 - 60
Minimum connection pressure	bar	0.9
Maximum connection pressure	bar	10

Dimensions	Unit	gas wall hung boiler condensing Buderus 600 - 28C
Pipe connections		
Gas	mm	Ø 22 mm compression fitting
Heating water	mm	Ø 22 mm compression fitting
Domestic water	mm	Ø 15 mm compression fitting
Condensate-water outlet	inch	G1"
Safety valve	inch	R¾" (¾" -½" adaptor supplied with boiler)
Flue gas values		
Condensate water quantity, natural gas, 40/30 °C	l/h	1.6
pH value of condensate water		3.5 - 4.5
Exhaust-fume mass-flow rate Full load Part-load	 g/s g/s	 10.6 4.3
Exhaust-fume temperature, full load Heating curve 75/60 °C Heating curve 40/30 °C	 °C °C	 95 55
Exhaust-fume temperature, part-load Heating curve 75/60 °C Heating curve 40/30 °C	 °C °C	 70 45
CO_2 full load, natural gas standard test gas G20	%	9.2
CO_2 full load, natural gas standard test gas LPG	%	10.3
Standard emission factor CO	mg/kWh	<22
Standard emission factor NO_x	mg/kWh	<30
Flow pressure available for use	Pa	75
Flue-gas system		
Type of exhaust-fume connection		C_{13}, C_{33}, C_{53}
Diameter of flue gas system	mm	80/125, 60/100 (accessory)
Electrical data		
Mains connection voltage	V	230
Electrical power consumption Full/Part load	W	115/105
Electrical protection rating		IP X4D
Boiler dimensions and weight		
Height x Width x Depth	mm	850 x 480 x 370
Weight (without casing)	kg	42
Casing	kg	5

6.2 Residual pump lift

This graphic shows the amount of pump lift remaining for the heating system.

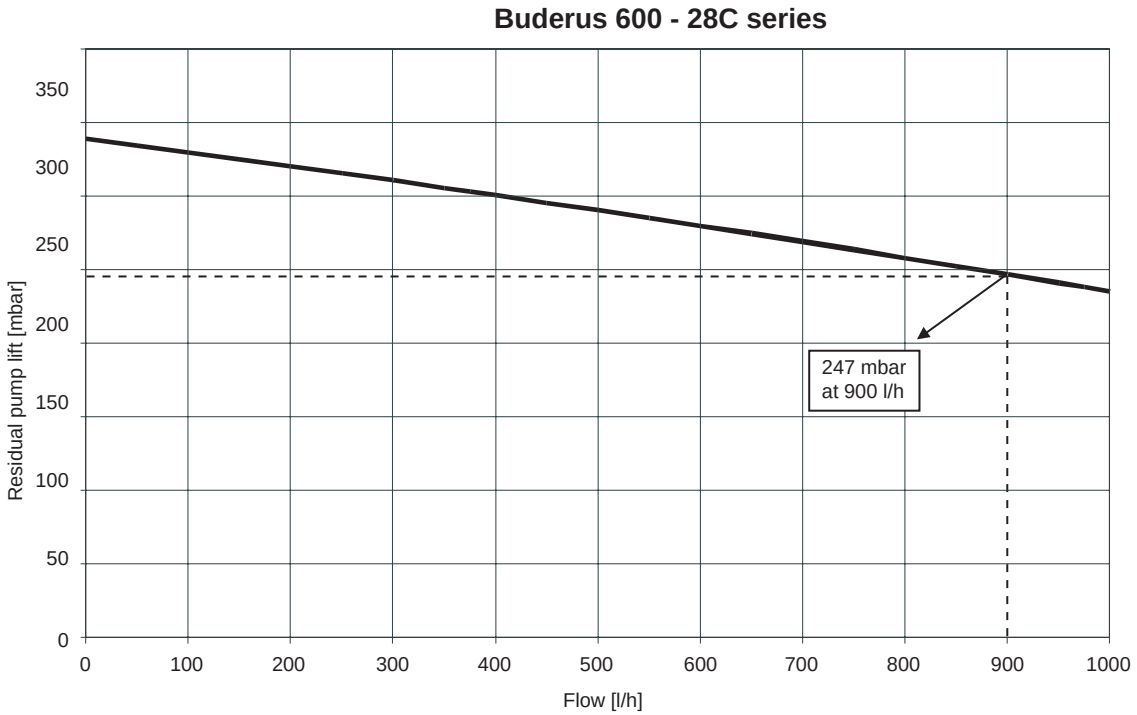

6.3 Short list of spare parts

The following are parts commonly required due to damage or expendability. Their failure or absence is likely to affect safety or performance of this appliance. For a pictorial representation of the part see the respective position number on the exploded view pictures on page 7.

	Description	Product No.
1	Casing (incl. insulation)	73624
2	Door control panel	73782
3	Ventilation cover	73647
4	Sealing ventilation cover	73649
5	Latches (set of 2 pc.)	73648s
6	Assembly casing block (set of 2 pc.)	38458s
7	Insulation frame	73733
8	Bracket	38092
9	Seal top (2 pc.)	73632s
10	Seal bottom (2 pc.)	73633s
11	Seal (set of 10 pc.)	73677s
12	Cover flue gas adaptor (80/125)	73628
13	Flue gas adaptor	73626
14	Seal 60 mm	73563
15	Exhaust pipe	73629
16	Seal 60 mm	73736
17	Condensate collector	73630
18	Flue gas sensor	87105062670
19	Seal exhaust pipe	73579
20	Condensate trap	73631
21	Drain pipe condensate trap	75988
22	Syphon	75986
23	Flex. drain pipe condensate trap	73508
24	Flow connection piece	73672
25	Automated air vent	38618
26	Bi-sensor	73673
27	Seal (set of 2 pc.)	73584s
28	O-ring (set of 10 pc.)	73580s
29	Supply pipe	73671
30	Clip (set of 5 pc.)	73653s
31	Service set GLE complete (also includes item 32, 33, 35, 36, 37, 38, 47 and 89)	7746700163
32	Ignition unit	8718600054
33	Ionisation electrode	38320
35	Seal (set of 5 pc.)	73666s
36	Gas/air supply valve (set of 5 pc.)	73756s
37	Seal fan (set of 5 pc.)	73640s
40	Heat exchanger	73659
41	Front panel heat exchanger	8718600024
42	Latches (set of 2 pc.)	73661s
43	Divider combustion gas	73670
44	Sight glass	73662
45	Seal heat exchanger	8718600141
46	Back panel heat exchanger	8718600023
47	Seal heat exchanger / gas/air supply	73728

	Description	Product No.
48	Fan	73639
49	Gas valve	73645
50	Venturi 24 kW	73641
51	Gas pipe	73644
52	Suction pipe	73646
53	UBA 3	8718600083
54	Room control converter	78079
55	Cable harness 24V	73695
56	Cable harness 230V	73779
57	BC10 mount	73692
58	Backpanel mounting plate	73693
59	Backpanel KIM	73694
60	Sensor flow detection	38353
61	Transformer	73697
62	Sensor CH and outflow	38352
63	Hot water tank	73654
64	DHW pipe (hot)	73650
65	DHW pipe (cold)	73652
66	Hot water flow regulator	73656
67	Connection assembly	73655
68	Pump Uper 15-50-130	73674
69	Electronic pressure sensor	73678
70	Return pump connection	73676
71	Return connection	73583
72	Actuator three-way valve	73686
73	Cartridge three-way valve	73685
74	Three-way valve without actuator	73688
75	Clip actuator	73687
76	Power switch	73660
77	Return pipe	73781
78	Pressure relief valve 3 bar	73199
79	Sanitary supply pipe	73683
80	Supply manifold	73682
81	By-pass	73681
82	Expansion vessel pipe	73691
83	Expansion vessel	73718
84	Seal 125 mm	73737
85	Seal frame/condensate trap	73561
86	Insulation casing	73732
87	RCC connection box	73720
88	Manifold assembly	20378
89	Burner thermostat	7746900412
	KIM 1024	73778
	Nipple ½"	73780
	Connection green	73773
	Connection orange	73777
	Connection red	73776
	Connection blue	73775
	Connection turquoise	73772

spares & parts online IBASIS.CO.UK

Buderus

Heating system specialist:

Buderus

Cotswold Way, Warndon, Worcester WR4 9SW

Customer Services: 0870 - 421 5933

Technical Support: 0870 - 421 5944

Fax: 01905 - 753 130

www.buderus.co.uk

721.279A 0008

In the UK and IE, Buderus is a brand name of Bosch Thermotechnology Ltd.

spares & parts online IBASIS.CO.UK