Britony System II

SYSTEM BOILER

Central Heating

Fanned Flue system

Installation and Operating instructions

These instructions Must Be Left With The Appliance.

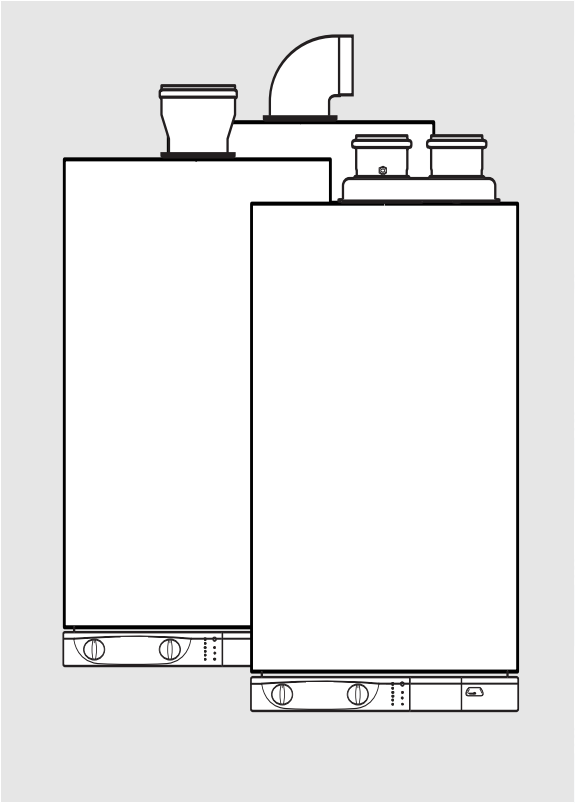

Manufactures N°	Model Type	Gas Council N°
200905815037.31	Britony System II 80 Nat	41 - 980 - 15
200905816037.31	Britony System II 100 Nat	41 - 980 - 17

C&M
CHAFFOTEAUX & MAURY

These instructions are suitable for the following boilers :

Britony System II 80
Britony System II 100

Do not forget the Logbook!

Chaffoteaux & Maury supports Benchmark, the heating industry code to ensure the correct installation, commissioning and servicing of domestic central heating systems.

To The Householder

Make sure you have a completed Logbook for your boiler. This is the record of the commissioning of the boiler to the manufacturer' instructions. It contains important information about your particular installation that may be required by service engineers. The logbook will also provide contact details for the installer should you need guidance in the use of this appliance or if there are any problems.

As with your car, your boiler will work more reliably and efficiently if regularly serviced. We recommend an annuel service check. The service history of the appliance will be marked on the logbook.

In the unlikely event of any problems with your boiler or system you should first contact your installer. If there is a fault with the boiler during its warranty period which your installer is unable to rectify they will contact our service department.

A charge may be made if Chaffoteaux & Maury Service is called out to resolve a non-product related fault.

Your statutory rights are not affected.

TO CONTACT C&M SERVICE, PLEASE CALL THE NATIONAL WARRANTY HELPLINE ON:

0870 600 9888

To The Installer

As part of the commissioning of this appliance it is vital that the Logbook is completed and given to the Householder. Please ensure that your customer is aware of the importance of keeping the Logbook safe as a record of the installation and the appliance service history.

Please ensure that your customer is aware of the correct operation of the system, boiler and controls.

CUSTOMER CARE

Chaffoteaux & Maury Ltd., as a leading manufacturer of domestic and commercial water heating appliances is committed to providing high quality products and a high quality after sales service. If it is necessary to contact an engineer, then telephone the national warrenty helpline 0870 600 9888.

Advice on installation or servicing can also be obtained by contacting the Chaffoteaux Customer Services Department at Telford.

CUSTOMER SERVICES DEPARTMENT
Tel: 0870 600 9888
Fax: 01494 459775

GUARANTEE

The manufacturer`s guarantee is for 12 months from the date of purchase. The guarantee is invalidated if the appliance is not installed in accordance with the recommendations made herein or in a manner not approved by the manufacturer. To assist us in providing you with an efficient after sales service, please return the guarantee registration card enclosed with the boiler without delay.

STATUTORY REQUIREMENTS

The installation of this appliance must be carried out by a CORGI Registered person or other competent person and in accordance with the requirements of the Gas Safety (Installation and Use) Regulations.

In addition, the installation must also comply with the current byelaws of Local Water Undertakings, Building Regulations, IEE Wiring Regulations, Local Authority Building Standards (Scotland) Regulations and the Safety Document 635 The Electricity at work Regulation. The appliance named below does not contain any asbestos or asbestos products, or mercury derivatives. Additional CFC's have not been used in this product.

The appliance does not contain any potential hazard in relation to the COSHH regulations.

It should also be carried out in accordance with current editions of the following British Standards Codes of practice: BS 6891, BS 5440 parts 1 and 2, BS 5449 part 1, BS 7593, BS 6798, BS 5546, BS 4814, BS 7074 part 1 and 2, BS 7671 and Institute of Gas Engineers document IGE/UP/7.

If there is a possibility of the incoming mains water pressure exceeding 10 bar then a suitable pressure limiting valve must be fitted where pressures exced 6 bars a pressure limiting is preferred.

Precautions: During servicing, keep the dust generation to a minimum and avoid inhaling any dust and contact with the skin and eyes. Normal handling and use will not present any discomfort, although some people with a history of skin complaints may be susceptible to irritation. When disposing of the ceramic lining, ensure that it is securely wrapped and wash hands after contact.

Contents

Page		Page	
CUSTOMER CARE	2	COMMISSIONING AND TESTING	11
Guarantee	2	Pre-commissioning	11
Statutory Requirements	2	Central Heating	11
CONTENTS	3	Lighting the boiler	11
INTRODUCTION	3	Post Commissioning	11
DESCRIPTION	4	Handing over to the Householder	11
Location of components	4	SYSTEM GUIDANCE	12
TECHNICAL DATA	5	Flushing and Water Treatment	12
DIMENSIONS	6	System Controls	12
OPERATION	7	Bypass and pump	12
Central Heating Mode	7	Expansion Vessel	12
INSTALLATION REQUIREMENTS	8	Filling Point	12
Location	8	USER'S INSTRUCTIONS	13
Flue	8	Control panel	13
Ventilation	8	Isolating taps	13
Gas Supply	8	Switching on	13
Electrical Supply	8	Heating	13
INSTALLING THE BOILER	8	To turn boiler off completely	13
Installation	8	NOTES	13
Method of positioning the boiler on the wall	8		
Connecting the boiler to the system	9		
Safety valve	9		
Fitting the horizontal flue	9		
Making the electrical connections	10		

1 Introduction

The **Britony System II** is a fully automatic, wall mounted, low water content boiler. It is a room sealed, fan assisted, balanced flued appliance providing central heating. It has electronic ignition and is suitable for all modern electrical control systems. The boiler is designed for sealed systems only and a circulating pump, expansion vessel together with a pressure gauge and safety valve are included within the boiler.

The standard horizontal flue kit is suitable for lengths 300 mm minimum to 790 mm maximum and includes an elbow adapter that can be rotated through 360˚. The horizontal flue can be extended (refer to Flue Installation Instructions), 45˚ and 90° flue bends are also available as accessories.

The **Britony System II** is also suitable for concentric vertical flueing and twin pipes. Adapters and accessoiries are available.

The **Britony System II** is packed in two cartons:

1. the boiler
2. the flue assembly and the pre installation kit

2 Description

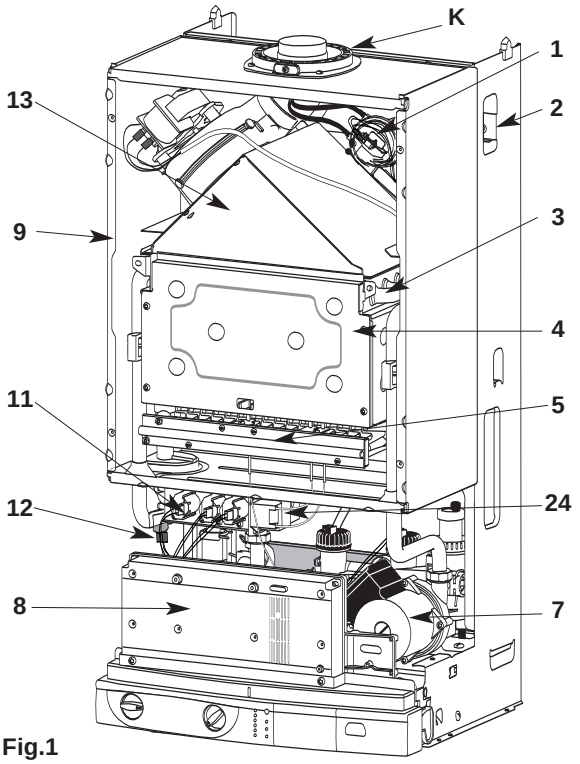

Fig.1

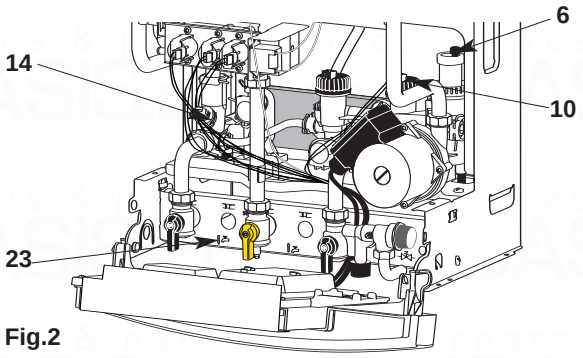

Fig.2

Location of components

1. - Air pressure switch
2. - Steel chassis complete with expansion vessel
3. - Main heat exchanger
4. - Combustion chamber
5. - Multi - gas burner assembly comprising ignition and ionisation electrodes
6. - Automatic air separator and automatic vent
7. - Pump
8. - Electrical box
9. - Sealed chamber
10. - Central heating flow switch
11. - Gas valve assembly
12. - Overheat sensor
13. - Flue hood with fan
14. - Central heating control thermistor
15. - Two position Selector switch

    PILOT O

    WINTER

16. - Heating flow temperature adjustment
17. - Heating temperature indicator
18. - Green indicator - Power ON
19. - Orange indicator - Burner ON
20. - Red indicator - Lock out / flame failure
21. - Reset button
22. - Pressure gauge
23. - Taps bracket
24. - Ignitor

K.- Flue kit fixing point (refer to kit manual)

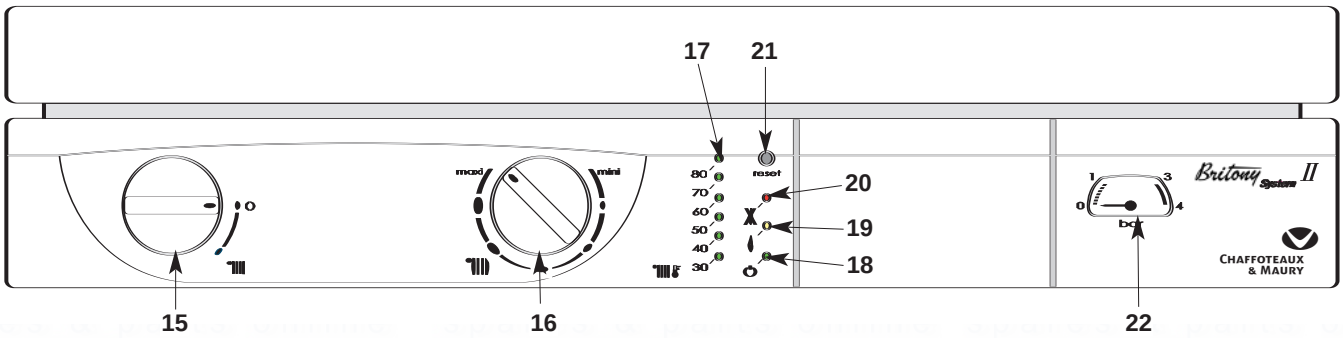

Fig.3

3 Technical data

Britony System II	80	100
Appliance category	Cat II $_{2H\ 3+}$	Cat II $_{2H\ 3+}$
Heat input C/H		
Maximum in kW	28.7	34.6
Maximum in Btu/h	98000	117900
Heat output C/H		
Maximum in kW	24	28
Maximum in Btu/h	81910	95600
C/H circuit pressures		
Min operating in bar	0.7	0.7
in lb/in²	10	10
Max operating in bar	2.5	2.5
in lb/in²	36.3	36.3
Compartment ventilation	**n o t r e q u i r e d**	

Natural gas G20

Gas rate		
Maximum in m³/h	2.74	3.29
Maximum in ft³/h	97	116
Inlet pressure		
Nominal in mbar	20	20
Nominal in in wg	8	8
Burner pressure		
Nominal in mbar	11	12.8
Nominal in in wg	4.4	5.1
Burner injector diameter		
Natural gas G20 in mm	1.23	1.28

Britony System II	80	100
PROPANE L.P.G. G31		
Gas rate		
Maximum in kg/h	2.00	2.42
Maximum in ft³/h	37	44.8
Inlet pressure		
Nominal in mbar	37	37
Nominal in in wg	14.8	14.8
Burner pressure		
Nominal in mbar	35	30.4
Nominal in in wg	14	12.2
BUTANE L.P.G. G30		
Gas rate		
Maximum in kg/h	2.04	2.45
Maximum in Lbs/h	4.50	5.40
Inlet pressure		
Nominal in mbar	28	28
Nominal in in wg	11.2	11.2
Burner pressure		
Nominal in mbar	26,7	24
Nominal in in wg	10.7	9.6
Burner injector diameter		
LPG G30 and G31 in mm	0.70	0.76
Safety discharge		
in bar	3	3
in lb/in²	43.5	43.5
Expansion vessel		
Pre-charge pressure in bar	0.7	0.7
Pre-charge pressure in lb/in²	10	1
Net capacity at 3 bar in liter	6	6
Adjustable by-pass		
Minimum flow rate in l/h	100	100
Minimum flow rate in gal/min	0.36	0.36
Maximum flow rate in l/h	700	700
Maximum flow rate in gal/min	2.56	2.56
Electrical characteristics		
Supply	230 v-50 Hz	230 v-50 Hz
Consumption	150 w	150 w
Protection	IP 44	IP 44
Fuse n°1	2 A	2 A
Fuse n°2	1.25 A	1.25 A
External controls	24 v	24 v

spares & parts online IBASIS.co.uk

4 Dimensions

Outer case dimensions :
- Width : 440 (minimum space required 450)
- Height : 850
- Depth : 380

All dimensions in mm

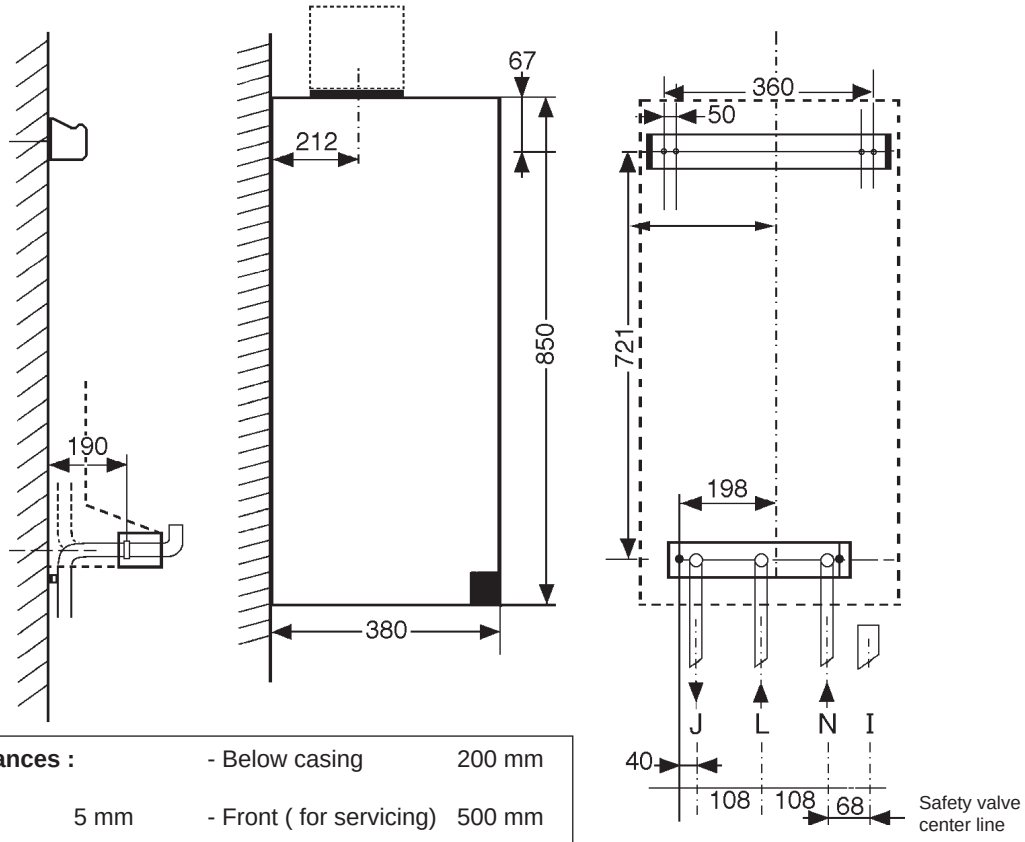

Minimum clearances :		- Below casing	200 mm
- Both sides	5 mm	- Front (for servicing)	500 mm
- Above casing	170 mm	- Front (in operation)	5 mm

The boiler is suitable for the flue types:
- type C 12
- type C 32 xx, C32 xy or C 52

Fig. 4

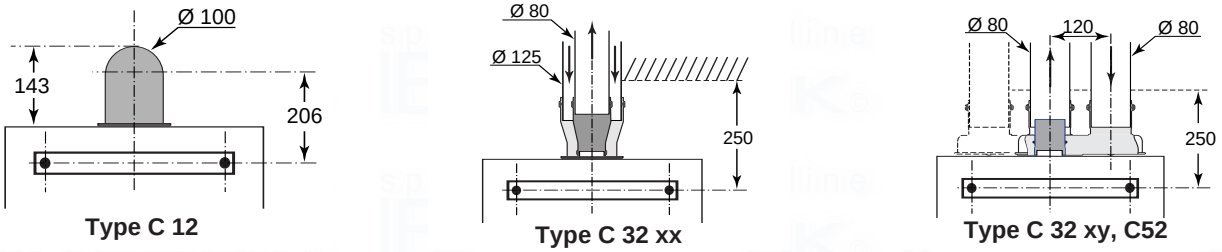

Fig. 5

Weights

With packaging :
- Britony System II 80 : 41.5kg
- Britony System Ii 100 : 41.5kg

Without packaging :
- Britony System II 80 : 39.5kg
- Britony System II 100 : 39.5kg

Lift weight :
- Britony System II 80 : 33.5kg
- Britony System II 100 : 33.5kg

Tails diameter

I	Safety valve outlet	Ø 15 mm
J	Heating flow	Ø 22 mm
L	Gas supply	Ø 22 mm
N	Heating return	Ø 22 mm

5 Operation

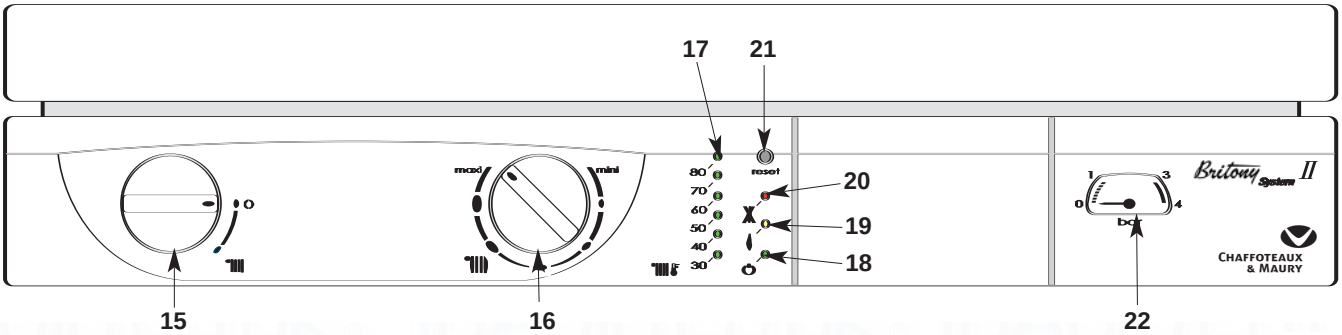

Fig. 6

Central Heating Mode

To be able to supply heating, the main switch **15** Fig. 6 must be turned fully clockwise to position. This will be confirmed by the green indicator light **18** Fig. 6.

When there is a demand for heating (either from the room thermostat or the external programmer) and the boiler temperature control is calling for heat. The pump starts and at a flow rate of 4 ltr/min the central heating flow switch operates allowing the ignition sequence to begin..

The first stage solenoid **a** fig. 7 and safety solenoid **c** fig. 7 open together to allow gas to the burner. The ignition sequence begins and a continuous high speed spark ignites the gas. As soon as a flame is detected the orange indicator bulb **19** Fig. 6 will light. After 45 seconds the second stage solenoid **b** Fig. 7 opens to allow the full gas rate. If a flame is not detected, after 8 seconds, the security solenoid closes and shuts off the gas. The red lockout indicator bulb **20** Fig. 6 will light.

The central heating flow temperature is controlled by the central heating control thermistor **e** Fig. 7. The boiler has been designed to minimise cycling and will not attempt to relight for at least 3 minutes after the boiler thermostat has been satisfied (this «TAC delay» can be set to 30 seconds if required, see maintenance and service guide). When the room thermostat is satisfied the burner will switch off and the pump will remain running for a further 3 minutes.

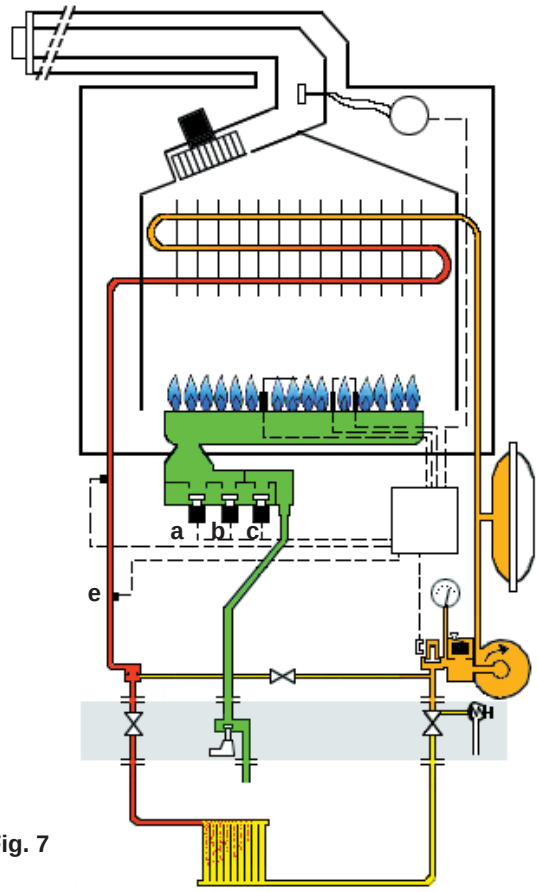

Fig. 7

6 Installation requirements

Location
The boiler can be installed on any suitable internal wall. Provision must be made to allow the correct routing of the flue and siting of the terminal to allow the safe and efficient removal of the flue products. A compartment or cupboard may be used provided that it has been purpose-built or modified for the purpose. It is not necessary to provide permanent ventilation for cooling purposes. Detailed recommendations are given in BS 5440 pt 2. If it is proposed that it is installed in a timber framed building then reference must be made to British Gas Document DM2, or advice sought from CORGI.

Flue

Detailed information on flue assembly is contained in the appropriate starter pack.
The boiler must be installed so that the flue terminal is exposed to the free passage of external air at all times. It must not be allowed to discharge into another room or space such as an outhouse or closed lean-to. The minimum acceptable clearances are shown below:

- A Directly below an opening, window, etc	300 mm
- B Above an opening, window, etc	300 mm
- C Horizontally to an opening, window, etc	300 mm
- D Below gutters, soils pipes or drain pipes	75 mm
- E Below eaves	200 mm
- F Below balconies or car port roof	200 mm
- G From a vertical drain pipe or soil pipe	150 mm
- H From an internal or external corner	300 mm
- I Above ground roof or balcony level	300 mm
- J From a surface facing the terminal	600 mm
- K From a terminal facing the terminal	1200 mm
- L From an opening in the car port into the dwelling	1200 mm
- M Vertically from a terminal on the same wall	1500 mm
- N Horizontally from a terminal on the same wall	300 mm
- Q Fixed by Ubbink Rolux 4 GM flue terminal	

It may be necessary to protect the terminal with a guard. Reference should be made to the Building Regulations for guidance. Suitable guards may be obtained from the following manufacturer:

Quinnel Barret & Quinnel Wireworks
Old Kent Road
London SE15 1NL
Tel: 0171 639 1357

Ventilation
The room in which the boiler is installed does not require specific ventilation. **If it is installed in a cupboard or compartment permanent ventilation is not required for cooling purposes.**

Gas Supply
The gas installation and soundness testing must be in accordance with the requirements of BS 6891.The boiler requires a 22 mm supply. Ensure that the pipe size is adequate for demand including other gas appliances on the same supply.

Electrical Supply
The appliance requires an earthed 230V - 50 Hz supply and must be in accordance with current I.E.E. It must also be possible to be able to completely isolate the appliance electrically. Connection should be via a 3 amp fused double-pole isolating switch with contact separation of at least 3 mm on both poles. Alternatively, a fused 3 Amp. 3 pin plug and unswitched socket may be used, provided it is not used in a room containing a bath or shower. It should only supply the appliance.

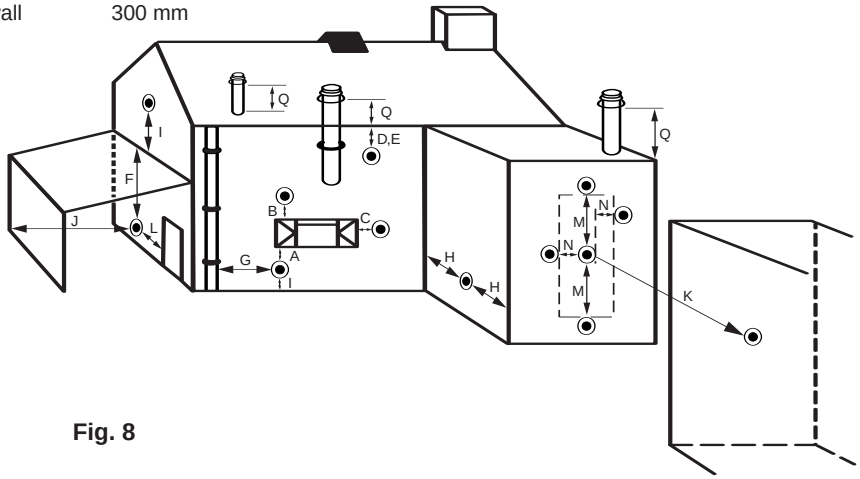

Fig. 8

7 Installing the boiler

Please check that you are familiar with the installation requirements before commencing work.(section 6)

Installation
The installation kit included with the flue components comprise following items :
- Hanging bracket
- A paper template (showing the dimensions of the boiler with 5 mm side clearances and fitting instructions)
- Connection tails
- Screws and wall plugs
- Connection washers
- Pre-piping jig
-Installation manual

Method of positioning the boiler on the wall.

The paper template can be used to ensure the correct positioning of kitchen cabinets etc.It also details the commissioning instructions.

The paper template has to be fixed to the wall and used to locate the position of the hanging bracket, the centre for the flue hole and, if required, the fixings for the pre-piping jig.

Drill and plug the wall and secure the hanging bracket using the screws provided. Remove the boiler from its packaging as shown in fig. 9 and remove the outer case as shown in fig.10.

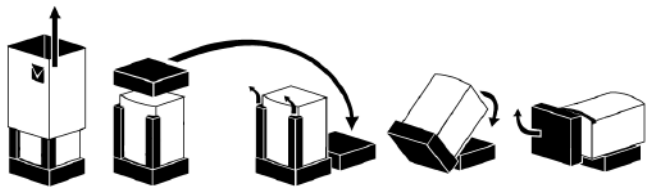

Fig. 9

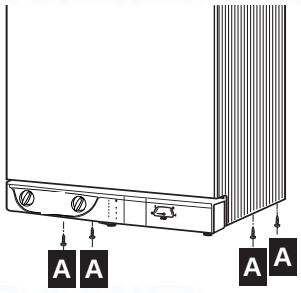

Fig. 10

Place the boiler on the wall on the hanging bracket.after removing the pre-installation jig.
If required, there is space for all piping to pass behind the boiler. Using fig. 11 for reference, connect the gas and water pipes and the valves to the base of the appliance using the tails provided. There is a 190 mm space between the valves and the wall to make these connections.
Provision must be made to fill and recharge the system pressure. This can be achieved using a filling loop or other methods approved by the local water authority.
The pressure relief should terminate below the boiler over a tundish or 22 mm pipe (see **I** fig 12) which should in turn discharge safely outside the premises. Care should be taken that it does not terminate over an entrance or window or where a discharge of heated water could endanger occupants or passers by.

The system should be carefully checked for leaks, as frequent refilling could cause premature system corrosion or unnecessary scaling of the heat exchanger

Connecting the boiler to the system (fig. 11)

- Hinge down the electrical box to access to the valves connections. Push in the tabs (**P** Fig 13) on either side of the boiler and pivot the box forward.
- Remove the yellow caps from connecting pipes and connect the boiler to the taps using washers provided in the plastic bag

2 x fibre washers for the water pipes
1 x washer mesh filter "**F**" CH return connection.
1 x rubber washer "**R**" for gas connection.
Provision must be made to fill and recharge the system pressure. This can be achieved using a filling loop or other methods approved by the local water authority.

Fitting the Horizontal Flue
The instructions for the vertical and biflux (twin pipe) flue options are included with the relevant adapter kits.

The standard flue supplied with the appliance is suitable for lengths from 300 mm minimum to 790 mm maximum. This means for rear flueing, the standard kit will accommodate a maximum wall thickness of 600 mm, and for side flueing a maximum wall thickness of 587 mm. This takes into account the minimum appliance side clearances of 5 mm.

If the fixing is a rear exit flue, the template provides the position of the centre for drilling the flue hole with a core drill.
If the flue is a side exit installation then calculate the position of the hole with a slope of 5 mm / metre away from the boiler to the terminal. The flue should fall slightly to the terminal.

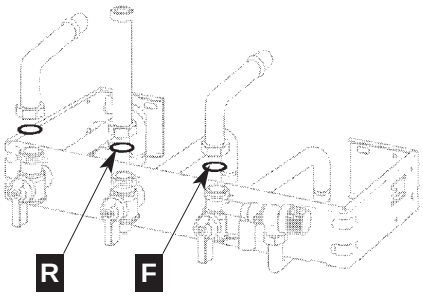

Fig. 11

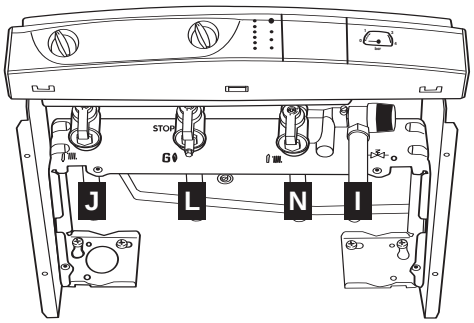

Fig. 12

I	Safety valve outlet	ø 15 mm
J	Heating flow	ø 22 mm
L	Gas supply	ø 22 mm
N	Heating return	ø 22 mm

Making the Electrical Connections

Hinge down the electrical box to gain access to the electrical connections. Push in the tabs (**P** fig. 13) on either side of the boiler and pivot the box forward.

Undo the two retaining screws, remove cover and remove cable clamp. (**A** fig. 13)

Connect the live and neutral wires to the multipin plug leaving sufficient earth wire to connect to the earthing point. (**B** fig. 15).

Note: The connections should be made so that should the lead be pulled from its anchorage, the current carrying wires become taut before the earth wire.

If using a room thermostat or other external control, they can be connected in place of the link on the multipin plug (fig 15).

Connect multipin plug onto into the socket on the power board. Secure the cable using the cable clamp and replace the cover.

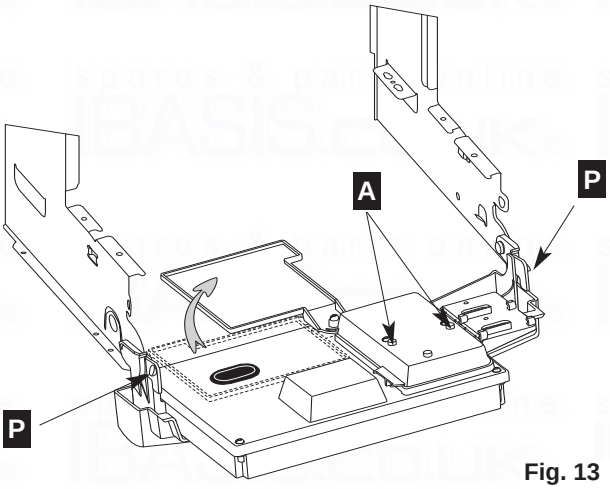

Fig. 13

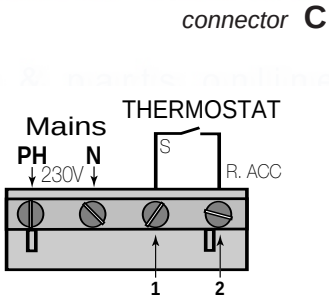

Fig. 14

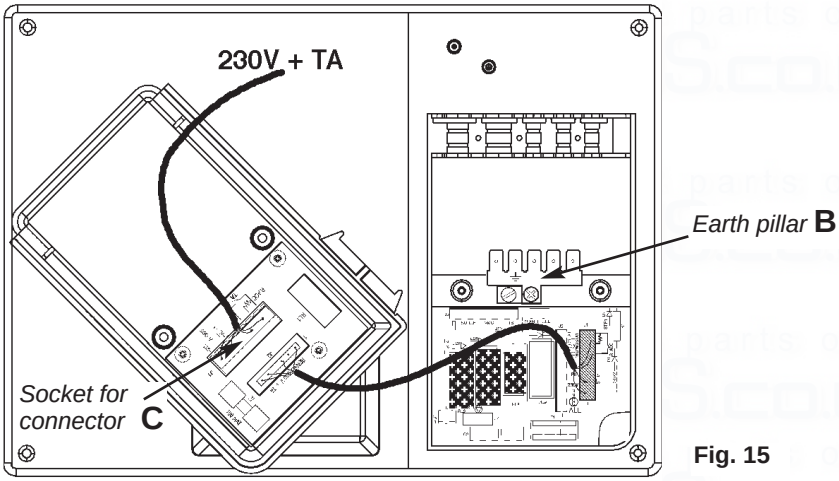

Fig. 15

8 Commissionning and testing

Pre-commissioning

Ensure that the system has been adequately flushed.
Purge gas supply of air and test for soundness.
Carry out final electrical tests to ensure the correct polarity and earthing continuity.

Central Heating

Open flow and return valves on the boiler.(30 and 33 Fig. 21)
Open the automatic air vent (6 Fig. 16)
Fill system and vent radiators.
Set system pressure and remove filling loop.
Check for leaks.
Manually check pump is free to turn.
Switch on electrical supply.
Turn selector switch (15 Fig. 16) fully clockwise to **ON** position (heating).
Allow pump to run for several minutes.
Isolate electrical supply.
Drain boiler and check water filter (**F** Fig. 11) for installation debris.
Replace filter and recharge system.

Lighting the Boiler

Connect gas pressure gauge to test point (43 Fig. 16).
Turn on the gas supply and boiler gas tap (31 Fig. 21).
Ensure electrical supply is on.
Ensure all external controls are calling for heat.
Turn selector switch (15 Fig. 16) fully clockwise to «ON» position (WINTER) .
Turn the boiler thermostat to maximum (16 fig 16).
The boiler will light.

Allow the boiler to heat system.
Check the inlet gas pressure (working pressure) while the boiler is operating. (Refer to technical data)
Check the operation of the boiler controls and safety devices. (see separate servicing leaflet for details)
Set the by pass (Refer to system guidance)
Re-flush the system to remove any dissolved oils and fluxes.
Recharge system pressure and introduce any water treatment as required.

Post Commissioning

Ensure system pressure has been set correctly.
Set the by pass.
Set boiler thermostat and controls.
Set programmer to householder's requirements.
Set external controls.
Ensure the Logbook is fully completed with your contact details and required readings and details of the installation.

Handing Over to the Householder

Demonstrate the lighting and operation of the boiler.
Demonstrate how to maintain the system pressure.
Explain the benefits of annual maintenance by a competent person.
Explain how to register guarantee.

Ensure the Householder countersigns the Logbook to confirm that these demonstrations have been carried out and understood.

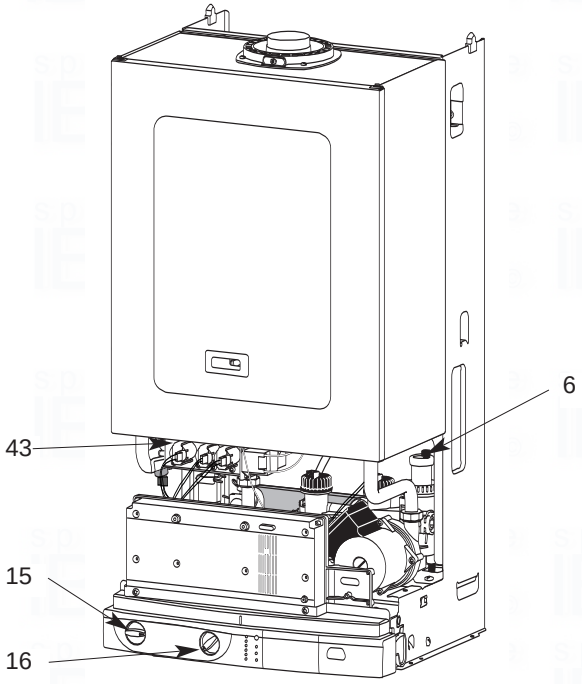

Fig. 16

9 System guidance

The boiler is suitable for sealed systems only. The maximum working pressure for the appliance is 3 bar. All fittings and pipework connected to the appliance should be of the same standard.

Flushing and Water Treatment

The performance of the appliance could be impaired by system debris or the effects of corrosion. The system must be flushed thoroughly to remove metal filings, solder, machining oils and other fluxes and greases before connecting the boiler. An appropriate flushing and descaling agent should be used, particulary if it is an existing system. Refer to BS 7593 (1992) for guidance. For more information on the use of corrosion inhibitors, flushing and descaling agents, advice can be sought from the manufacturers of water treatment products such as:

Betz Dearborn Ltd
Foundry Lane
Widnes
Cheshire
WA8 8UD
Tel: 0151 424 5351

Fernox Manufacturing
Britannica Works
Clavering
Essex
CB11 4QZ
Tel: 01799 550811

System Controls

The boiler is electrically controlled and is suitable for most modern electronic time and temperature controls.
The addition of such external controls can be beneficial to the efficient operation of the system.
The boiler connections for external controls are 230V and so only controls of 230V or that have voltage free contacts should be used.

By pass and Pump

The boiler is fitted with a pre-adjusted by pass. Although adjustment is not normally necessary, the by pass can be reset by turning screw (**D** Fig. 17) anticlockwise to open the by-pass using the chart below for guidance.
If used on a system with thermostatic radiator valves, the flow rate with the thermostatic valves closed should be adjusted to at least 300 l/hr.The chart below indicates the residual head of the pump available for the system.

Expansion Vessel

The expansion vessel is pre-charged to 0.7 bar (10 lb/in^2). The vessel is suitable for systems up to 145 litres capacity. For systems of greater capacity an additional expansion vessel will be required. Refer to the chart below and BS 7074 pt 1 or BS 5449.

Filling Point

Provision must be made to be able to charge the system on commissioning and to make up any subsequent pressure loss.
The method of connection must utilise approved equipment and must comply with the water regulations. A filling loop can be so installed as to be hidden beneath the boiler.

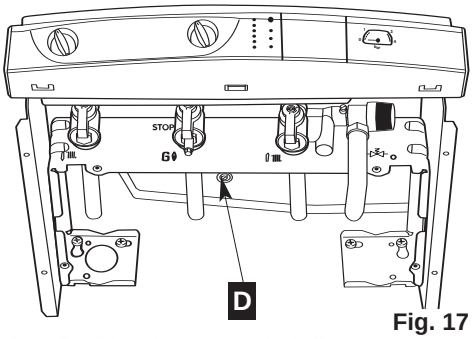

Fig. 17

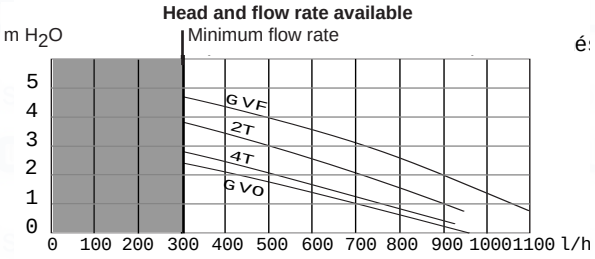

Fig. 18

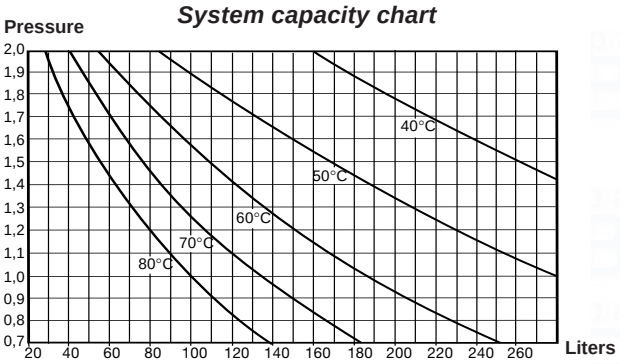

Fig. 19

Control panel (fig. 20)

15. - Two position Selector switch

PILOT O

WINTER

16. - Heating flow temperature adjustment

18. - Green indicator - Power ON

19. - Orange indicator - Burner ON

20. - Red indicator - Lock out / flame failure

21. - "RESET" button

22. - Pressure gauge

Isolating Taps (fig. 21)
taps shown in Open position

30. CH Flow isolating valve

31. Gas service tap

33. CH Return isolating valve

34. Pressure relief valve

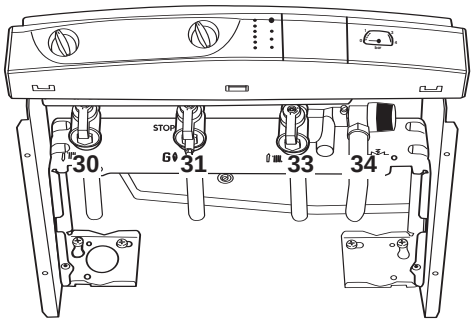

Fig. 21

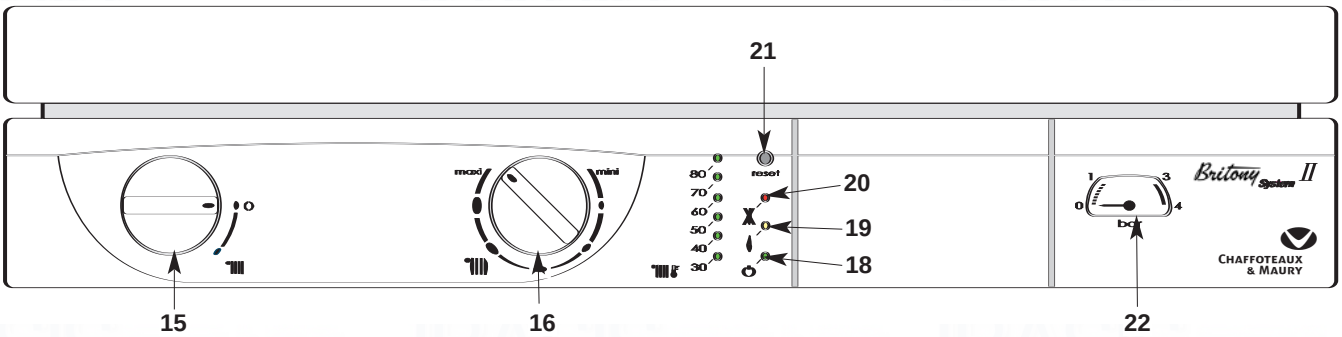

Fig. 20

Switching on

1) Check that the gas service tap is opened at the gasmeter and main power is on.
2) Check that pressure in central heating system is above 0.7 bar and below 2.5 bar with the pressure gauge **22**.
3) Open the gas tap **31** by turning from right to left.
4) The boiler is now ready to use.

Heating

1) Turn selector switch **15** fully clockwise to position
The green "power on" indicator will light.
2) If the room thermostat (if fitted), the boiler temperature control and the clock (if fitted) are all calling for heat, the orange "burner on" indicator will light and the heating will be on.

Note: If the boiler has been turned off for some time the first attempt to light it may result in a lockout . If this happens press the reset button **21** and the boiler will light.

To Turn Boiler Off Completely

1) Turn the selector switch **15** to the off position O
2) Turn the gas tap **31** from left to right "STOP".

Notes

spares & parts online IBASIS.CO.UK

Notes

spares & parts online IBASIS.CO.UK

This appliance is suitable for Natural gas or LPG. A gas conversion must be made by a competent person.

Chaffoteaux & Maury are continuously improving their products and therefore reserve the right to change specifications without prior notice and accepts no liability for any errors or omission in the information contained in this document.

Manufacturer: **Chaffoteaux & Maury - France**

Commercial subsidiary: **MTS (GB) Limited**
MTS Building
Hughenden Avenue
High Wycombe
Bucks HP13 5FT

Telephone: (01494) 755600
Fax: (01494) 459775
Internet: www.chaffoteaux.co.uk
E-mail: info@uk.mtsgroup.com

Technical Support Help Line: 0870 241 8180
Customer Service Help Desk: 0870 600 9888

1309458c - 04/2005