Britony System II Plus

SYSTEM BOILER

Central Heating boiler compatible with indirect cylinder

Fanned Flue system

Installation and Operating instructions

These instructions Must Be Left With The Appliance.

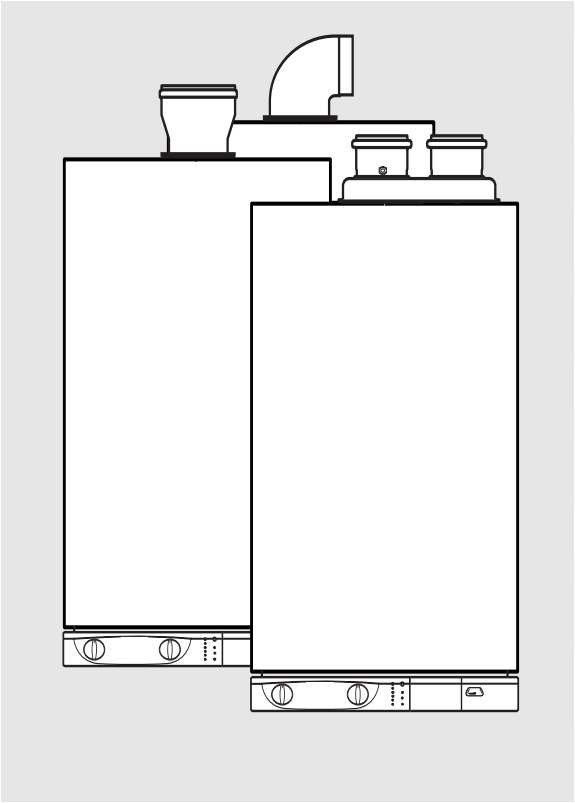

Manufactures N°	Model Type	Gas Council N°
200907815037.31	Britony System II Plus 80 Nat	41 - 980 - 16
200907816037.31	Britony System II Plus 100 Nat	41 - 980 - 25

C&M
CHAFFOTEAUX & MAURY

These instructions are suitable for the following boilers :

Britony System II Plus 80
Britony System II Plus 100

Do not forget the Logbook!

Chaffoteaux & Maury supports Benchmark, the heating industry code to ensure the correct installation, commissioning and servicing of domestic central heating systems.

To The Householder

Make sure you have a completed Log Book for your boiler. This is the record of the commissioning of the boiler to the manufacturer's instructions. It contains important information about your particular installation that may be required by service engineers. The Log Book will also provide contact details for the installer should you need guidance in the use of this appliance or if there are any problems.

As with your car, your boiler will work more reliably and efficiently if regularly serviced. We recommend an annual service check. The service history of the appliance will be marked on the Log Book.

In the unlikely event of any problems with your boiler or system you should first contact your installer. If there is a fault with the boiler during its warranty period which your installer is unable to rectify they will contact our service department.

A charge may be made if Chaffoteaux & Maury Service is called out to resolve a non-product related fault.

Your statutory rights are not affected.

TO CONTACT C&M SERVICE, PLEASE CALL THE NATIONAL WARRANTY HELPLINE ON:

0870 600 9888

To The Installer

As part of the commissioning of this appliance it is vital that the Log Book is completed and given to the Householder. Please ensure that your customer is aware of the importance of keeping the Log Book safe as a record of the installation and the appliance service history.

Please ensure that your customer is aware of the correct operation of the system, boiler and controls.

CUSTOMER CARE

Chaffoteaux & Maury, as a leading brand of domestic and commercial water heating appliances is committed to providing high quality products and a high quality after sales service. If it is necessary to contact an engineer, then telephone the national warranty helpline 0870 600 9888.
Advice on installation or servicing can also be obtained by contacting the Chaffoteaux Technical Department.

Tel: 0870 241 8180
Fax: 01494 459775

GUARANTEE

The manufacturer`s guarantee is for 12 months from the date of purchase. The guarantee is invalidated if the appliance is not installed in accordance with the recommendations made herein or in a manner not approved by the manufacturer. To assist us in providing you with an efficient after sales service, please return the guarantee registration card enclosed with the boiler without delay.

STATUTORY REQUIREMENTS

The installation of this appliance must be carried out by a CORGI Registered person or other competent person and in accordance with the requirements of the Gas Safety (Installation and Use) Regulations.
In addition, the installation must also comply with the current byelaws of Local Water Undertakings, Building Regulations, IEE Wiring Regulations, Local Authority Building Standards (Scotland) Regulations and the Safety Document 635 The Electricity at work Regulation. The appliance named below does not contain any asbestos or asbestos products, or mercury derivatives. Additional CFC's have not been used in this product.
The appliance does not contain any potential hazard in relation to the COSHH regulations.
It should also be carried out in accordance with current editions of the following British Standards Codes of practice: BS 6891, BS 5440 parts 1 and 2, BS 5449 part 1, BS 7593, BS 6798, BS 5546, BS 4814, BS 7074 part 1 and 2, BS 7671 and Institute of Gas Engineers document IGE/UP/7.
If there is a possibility of the incoming mains water pressure exceeding 10 bar then a suitable pressure limiting valve must be fitted where pressures exced 6 bars a pressure limiting is preferred.
Precautions: During servicing, keep the dust generation to a minimum and avoid inhaling any dust and contact with the skin and eyes. Normal handling and use will not present any discomfort, although some people with a history of skin complaints may be susceptible to irritation. When disposing of the ceramic lining, ensure that it is securely wrapped and wash hands after contact.

CAUTION! Installation, start-up, adjustments and maintenance must be performed by a competent person only, in accordance with the current Gas Safety (Installation & Use) Regulations and the instructions provided. Improper installation may cause damage or injury to individuals, animals and personal property, for which the manufacturer will not be held liable. To ensure efficient and safe operation it is recommended that the boiler is serviced anually by a competent person. If it is known that a fault exists on the appliance, it must not be used until the fault has been corrected by a competent person.

CONTENTS

Page		Page	
CUSTOMER CARE	2	COMMISSIONING AND TESTING	11
Guarantee	2	Pre-commissioning	11
Statutory Requirements	2	D.H.W	11
CONTENTS	3	Central Heating	11
INTRODUCTION	3	Lighting the boiler	11
DESCRIPTION	4	Post Commissioning	11
Location of components	4	Handing over to the Householder	11
TECHNICAL DATA	5	SYSTEM GUIDANCE	12
DIMENSIONS	6	Flushing and Water Treatment	12
OPERATION	7	System Controls	12
Domestic Hot Water Mode	7	Bypass and pump	12
Central Heating Mode	7	Expansion Vessel	12
INSTALLATION REQUIREMENTS	8	Filling Point	12
Location	8	USER'S INSTRUCTIONS	13
Flue	8	Control panel	13
Ventilation	8	Isolating taps	13
Gas Supply	8	Switching on	13
Electrical Supply	8	Hot Water	13
INSTALLING THE BOILER	8	Heating and Hot Water	13
Installation	8	Turn off the boiler	13
Method of positioning the boiler on the wall	8		
Connecting the boiler to the system	9		
Fitting the horizontal flue	9		
Making the electrical connections	10		

1 Introduction

The **Britony System II Plus** is a fully automatic, wall mounted, low water content boiler. It is a room sealed, fan assisted, balanced flued appliance . The appliance includes a diverter valve and so can provide central heating and hot water flow for an indirect cylinder.
It has electronic ignition and is suitable for use with all modern electrical control systems. The boiler is designed for sealed systems only and a circulating pump, expansion vessel together with a pressure gauge and safety valve are included within the boiler.

The standard horizontal flue kit is suitable for lengths 300 mm minimum to 790 mm maximum and includes an elbow adapter that can be rotated through 360˚. The horizontal flue can be extended (refer to Flue Installation Instructions), 45˚ and 90° flue bends are also available as accessories.

The **Britony System II** Plus is also suitable for concentric vertical and twin pipe flueing. Adapters and accessories are available.

The boiler is packed in three cartons:

1. the boiler,
2. the flue assembly and the pre installation kit,
3. additional accessories kit.

2 Description

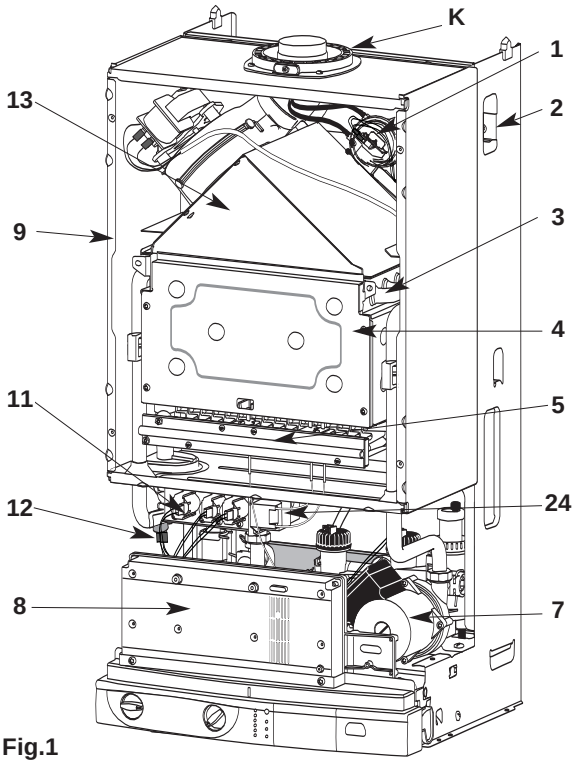

Fig.1

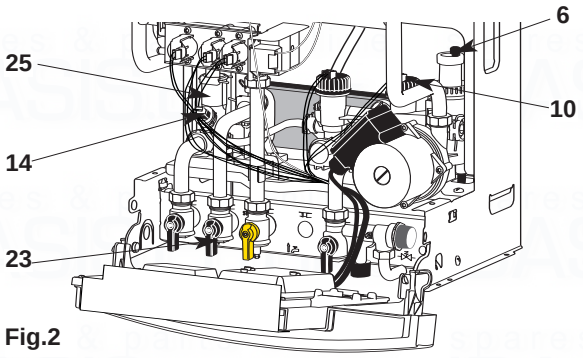

Fig.2

Location of components

1. - Air pressure switch
2. - Steel chassis complete with expansion vessel
3. - Main heat exchanger
4. - Combustion chamber
5. - Multi- gas burner assembly comprising ignition and ionisation electrodes
6. - Automatic air separator and automatic vent
7. - Pump
8. - Electrical box
9. - Sealed chamber
10. - Central heating flow switch
11. - Gas valve assembly
12. - Overheat sensor
13. - Flue hood with fan
14. - Central heating control thermistor
15. - Three position Selector switch

Pilot	O
Hot water only	
Hot water + Central heating	

16. - Primary circuit control thermistor
17. - Heating temperature indicator
18. - Green indicator - Power ON
19. - Orange indicator - Burner ON
20. - Red indicator - Lock out / flame failure
21. - Reset button
22. - Pressure gauge
23. - Taps bracket
24. - Ignitor
25. - Three way valve

K.- Flue kit fixing point (refer to kit manual)

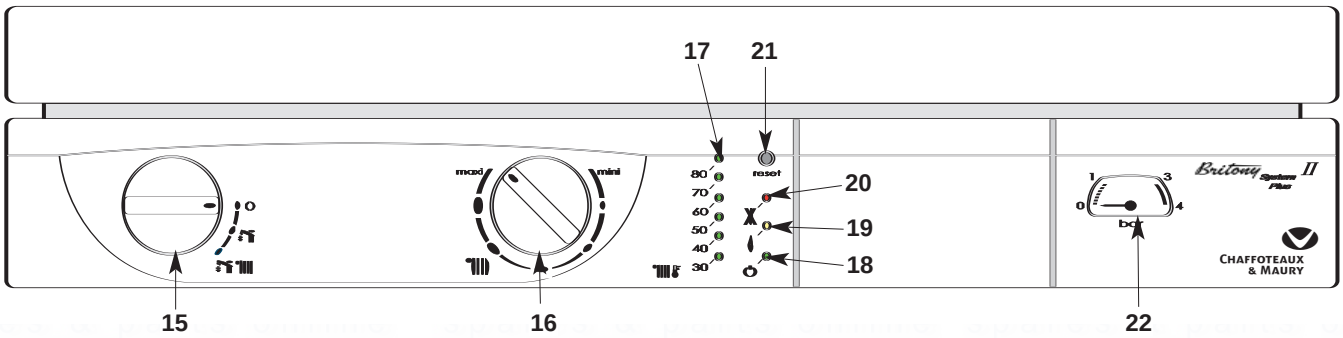

Fig.3

3 Technical Data

Britony System II Plus	80	100
Appliance category	Cat II $_{2H\ 3+}$	Cat II $_{2H\ 3+}$
Heat input C/H & HW		
Maximum in kW	28.7	34.6
Maximum in Btu/h	98000	117900
Heat output C/H & HW		
Maximum in kW	24	28
Maximum in Btu/h	81910	95600
C/H circuit pressures		
Min operating in bar	0.7	0.7
in lb/in²	10	10
Max operating in bar	2.5	2.5
in lb/in²	36.3	36.3
Compartment ventilation	not required	

Natural gas G20

Gas rate		
Maximum in m³/h	2.74	3.29
Maximum in ft³/h	97	116
Inlet pressure		
Nominal in mbar	20	20
Nominal in in wg	8	8
Burner pressure		
Nominal in mbar	11	12.8
Nominal in in wg	4.4	5.1
Burner injector diameter		
Natural gas G20 in mm	1.23	1.28

Britony System II Plus	80	100
PROPANE L.P.G. G31		
Gas rate		
Maximum in kg/h	2.00	2.42
Maximum in ft³/h	37	44.8
Inlet pressure		
Nominal in mbar	37	37
Nominal in in wg	14.8	14.8
Burner pressure		
Nominal in mbar	35	30.4
Nominal in in wg	14	12.2
BUTANE L.P.G. G30		
Gas rate		
Maximum in kg/h	2.04	2.45
Maximum in Lbs/h	4.50	5.40
Inlet pressure		
Nominal in mbar	28	28
Nominal in in wg	11.2	11.2
Burner pressure		
Nominal in mbar	26,7	24
Nominal in in wg	10.7	9.6
Burner injector diameter		
LPG G30 and G31 in mm	0.70	0.76
Safety discharge		
in bar	3	3
in lb/in²	43.5	43.5
Expansion vessel		
Pre-charge pressure in bar	0.7	0.7
Pre-charge pressure in lb/in²	10	1
Net capacity at 3 bar in liter	6	6
Adjustable by-pass		
Minimum flow rate in l/h	100	100
Minimum flow rate in gal/min	0.36	0.36
Maximum flow rate in l/h	700	700
Maximum flow rate in gal/min	2.56	2.56
Electrical characteristics		
Supply	230 v-50 Hz	230 v-50 Hz
Consumption	150 w	150 w
Protection	IP 44	IP 44
Fuse n°1	2 A	2 A
Fuse n°2	1.25 A	1.25 A
External controls	24 v	24 v

spares & parts online IBASIS.CO.UK

4 Dimensions

Outer case dimensions :
- Width : 440 (minimum space required 450)
- Height : 850
- Depth : 380

All dimensions in mm

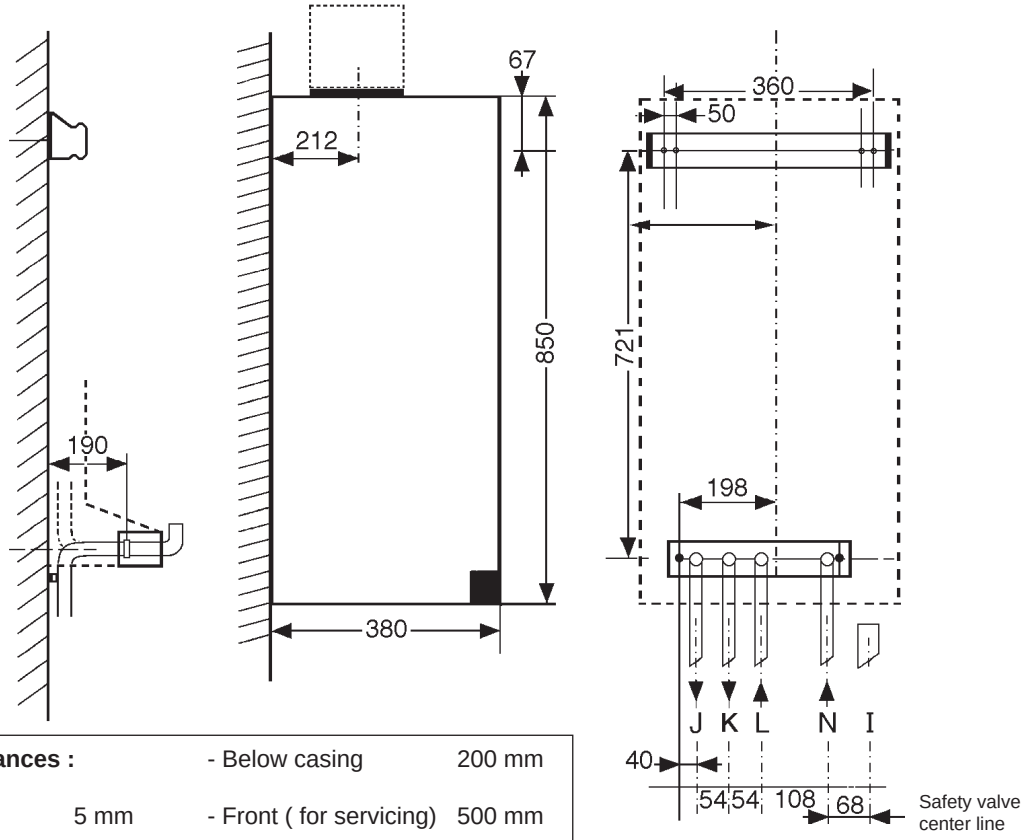

Minimum clearances :		- Below casing	200 mm
- Both sides	5 mm	- Front (for servicing)	500 mm
- Above casing	170 mm	- Front (in operation)	5 mm

The boiler is suitable for the flue types:
- type C 12
- type C 32 xx, C32 xy or C 52

Fig. 4

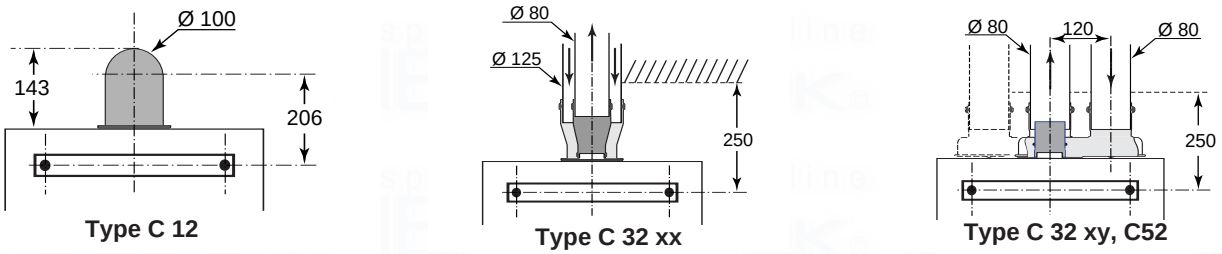

Fig. 5

Weights

With packaging :
- Britony System II Plus 80 : 43.2kg
- Britony System II Plus 100 : 45.2kg

Without packaging :
- Britony System II Plus 80 : 41.2kg
- Britony System II Plus 100 : 43.2kg

Lift weight :
- Britony System II Plus 80 : 35.2kg
- Britony System II Plus 100 : 37.2kg

Tails diameter

I	Safety valve outlet	Ø 15 mm
J	Heating flow	Ø 22 mm
K	H.W. flow	Ø 22 mm
L	Gas supply	Ø 22 mm
N	Heating return	Ø 22 mm

5 Operation

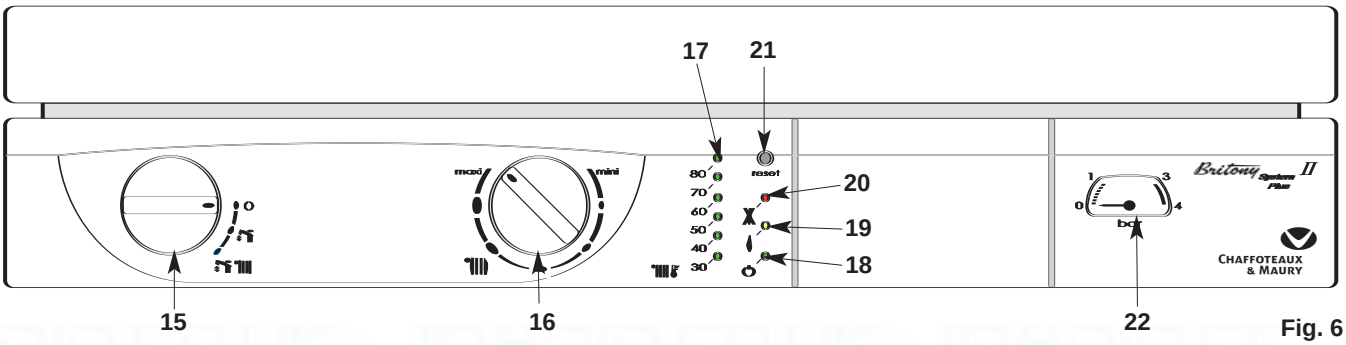

Fig. 6

Domestic Hot Water Mode

To be able to supply hot water, the selector switch (15 fig. 6) must be in either in or position. This will be confirmed by the green indicator light (18 fig. 6).

When the cylinder thermostat is calling for heat, it switches the 3 way valve **g** (fig. 7) to hot water position. Then the hot water from the primary circuit is diverted through the cylinder coil to heat DHW.

The first stage solenoid **a** (fig. 7) and safety solenoid **c** (fig. 7) open together to allow gas to the burner.
The ignition sequence begins and a continuous high speed spark ignites the gas. As soon as a flame is detected the orange indicator bulb (19 fig. 6) will light and the second stage solenoid **b** (fig. 7) opens to allow the full gas rate.
If a flame is not detected, after 8 seconds, the security solenoid closes and shuts off the gas.
The red lockout indicator bulb (20 fig. 6) will light.
The hot water flow temperature is controlled by the primary circuit control thermistor **e** (fig. 7).

When the cylinder thermostat is satisfied, the burner is extinguished and the pump stops.
The boiler will now stay in the hot water mode for three minutes.

Priority will be given to a demand for reheating the cylinder.

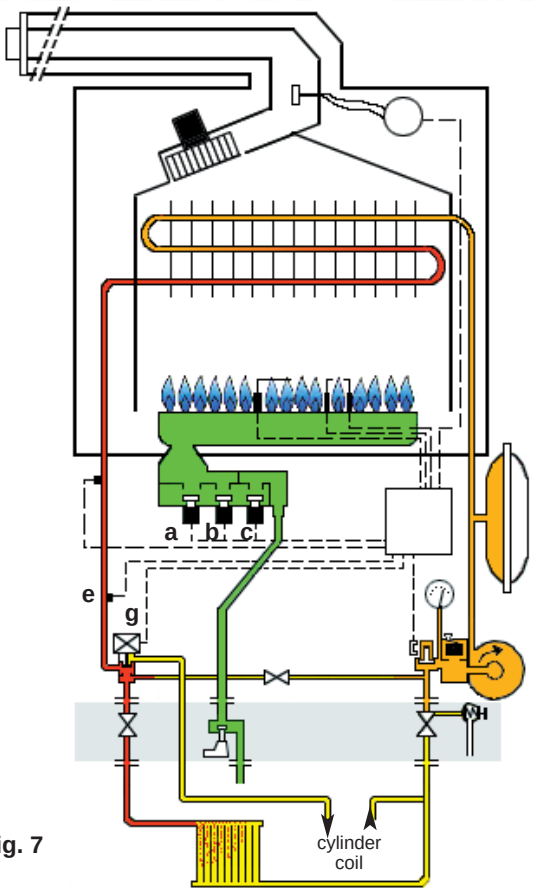

Fig. 7

Central Heating Mode

To be able to supply central heating, the selector switch (15 fig. 6) must be in position. This will be confirmed by the green indicator light (18 fig. 6)
When there is a demand for heating (either from the room thermostat or the external programmer) and the boiler temperature control is calling for heat. The pump starts and at a flow rate of 4 ltr/min the central heating flow switch operates allowing the ignition sequence to begin. The first stage solenoid **a** (fig. 7) and safety solenoid **c** (fig. 7) open together to allow gas to the burner. The ignition sequence begins and a continuous high speed spark ignites the gas. As soon as a flame is detected the orange indicator bulb (19 fig. 6) will light. After 45 seconds the second stage solenoid **b** (fig. 7) opens to allow the full gas rate. If a flame is not detected, after 8 seconds, the security solenoid closes and shuts off the gas. The red lockout indicator bulb (20 fig. 6) will light.

The central heating flow temperature is controlled by the central heating control thermistor **e** (fig. 7). The boiler has been designed to minimise cycling and will not attempt to relight for at least 3 minutes after the boiler thermostat has been satisfied (this «TAC delay» can be set to 30 seconds if required, see maintenance and service guide). When the room thermostat is satisfied the burner will switch off and the pump will remain running for a further 3 minutes.

NB
It is possible to override the TAC delay by pressing the

6 Installation Requirements

Location
The boiler can be installed on any suitable internal wall. Provision must be made to allow the correct routing of the flue and siting of the terminal to allow the safe and efficient removal of the flue products. A compartment or cupboard may be used provided that it has been purpose-built or modified for the purpose. It is not necessary to provide permanent ventilation for cooling purposes. Detailed recommendations are given in BS 5440 pt 2. If it is proposed that it is installed in a timber framed building then reference must be made to British Gas Document DM2, or advice sought from CORGI.

Flue

Detailed information on flue assembly is contained in the appropriate starter pack.
The boiler must be installed so that the flue terminal is exposed to the free passage of external air at all times. It must not be allowed to discharge into another room or space such as an outhouse or closed lean-to. The minimum acceptable clearances are shown below:

- A Directly below an opening, window, etc	300 mm
- B Above an opening, window, etc	300 mm
- C Horizontally to an opening, window, etc	300 mm
- D Below gutters, soils pipes or drain pipes	75 mm
- E Below eaves	200 mm
- F Below balconies or car port roof	200 mm
- G From a vertical drain pipe or soil pipe	150 mm
- H From an internal or external corner	300 mm
- I Above ground roof or balcony level	300 mm
- J From a surface facing the terminal	600 mm
- K From a terminal facing the terminal	1200 mm
- L From an opening in the car port into the dwelling	1200 mm
- M Vertically from a terminal on the same wall	1500 mm
- N Horizontally from a terminal on the same wall	300 mm
- Q Fixed by Ubbink Rolux 4 GM flue terminal	

It may be necessary to protect the terminal with a guard. Reference should be made to the Building Regulations for guidance. Suitable guards may be obtained from the following manufacturer:

Quinnel Barret & Quinnel Wireworks
Old Kent Road
London SE15 1NL
Tel: 0171 639 1357

Ventilation
The room in which the boiler is installed does not require specific ventilation. **If it is installed in a cupboard or compartment permanent ventilation is not required for cooling purposes.**

Gas Supply
The gas installation and soundness testing must be in accordance with the requirements of BS 6891.The boiler requires a 22 mm supply. Ensure that the pipe size is adequate for demand including other gas appliances on the same supply.

Electrical Supply
The appliance requires an earthed 230V - 50 Hz supply and must be in accordance with current I.E.E. Regulations. It must also be possible to be able to completely isolate the appliance electrically. Connection should be via a 3 amp fused double-pole isolating switch with contact separation of at least 3 mm on both poles. Alternatively, a fused 3 Amp. 3 pin plug and unswitched socket may be used, provided it is not used in a room containing a bath or shower. It should only supply the appliance.

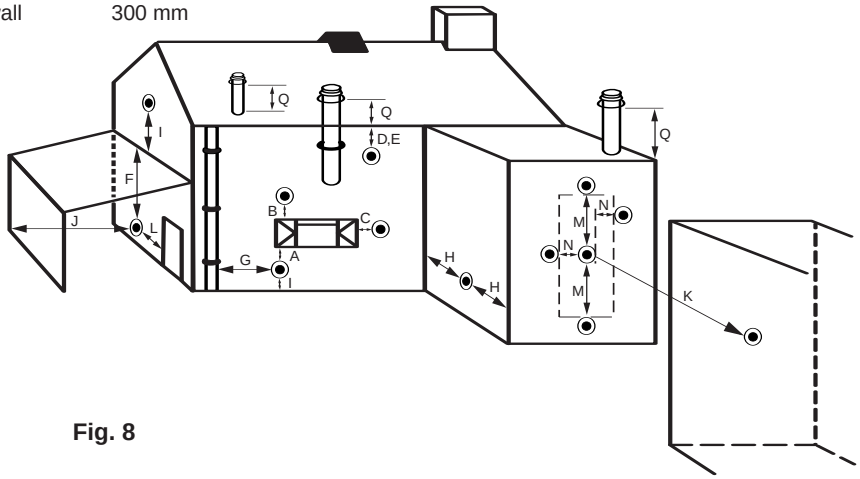

Fig. 8

7 Installing the Boiler

Please check that you are familiar with the installation requirements before commencing work.(section 6)

Installation
The installation kit included with the flue components comprise following items :
- Hanging bracket
- A paper template (showing the dimensions of the boiler with 5 mm side clearances and fitting instructions)
- Connection tails
- Screws and wall plugs
- Connection washers
- Pre-piping jig
- Installation manual

The 22 mm copper tail to connect the cylinder coil to the **Britony II System Plus** is located in the box of the boiler.

Method of positioning the boiler on the wall.
The paper template can be used to ensure the correct positioning of kitchen cabinets etc. It also details the commissioning instructions.
The paper template has to be fixed to the wall and used to fix the position of the hanging bracket, the centre for the flue hole and, if required, the fixings for the pre-piping jig.

Drill and plug the wall and secure the hanging bracket using the screws provided. Remove the boiler from its packaging as shown in fig. 9 and remove the outer case as shown in fig.10.
Place the boiler on the wall on the hanging bracket.after removing the pre-installation jig.

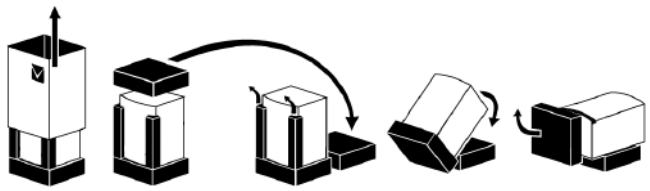

Fig. 9

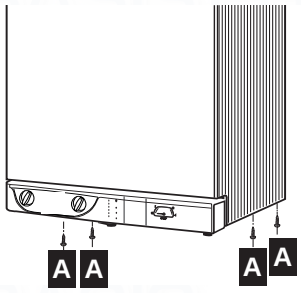

Fig. 10

If required, there is space for all piping to pass behind the boiler. Using fig. 12 for reference, connect the gas and water pipes and the valves to the base of the appliance using the tails provided. There is a 190 mm space between the valves and the wall to make these connections.
Provision must be made to fill and recharge the system pressure. This can be achieved using a filling loop or other methods approved by the local water authority.
The pressure relief should terminate below the boiler over a tundish or 22 mm pipe (see **I** fig 12) which should in turn discharge safely outside the premises. Care should be taken that it does not terminate over an entrance or window or where a discharge of heated water could endanger occupants or passers by.

The system should be carefully checked for leaks, as frequent refilling could cause premature system corrosion or unnecessary scaling of the heat exchanger

Connecting the boiler to the system (fig. 11)

- Hinge down the electrical box to access to the valves connections. Push in the tabs (**P** Fig 14) on either side of the boiler and pivot the box forward.
- Remove the yellow caps from connecting pipes and connect the boiler to the taps using washers provided in the plastic bag

3 x fibre washers for the water pipes

1 x washer mesh filter "**F**" CH return connection.

1 x rubber washer "**R**" for gas connection.

Provision must be maid to reduce as much as possible the distance **A** from the cylinder coil return to the boiler and **B** should be greater than 200 mm to avoid gravity effects.(fig. 13)

Fitting the Horizontal Flue
The instructions for the vertical and biflux (twin pipe) flue options are included with the relevant adapter kits.

The standard flue supplied with the appliance is suitable for lengths from 300 mm minimum to 790 mm maximum. This means for rear flueing, the standard kit will accommodate a maximum wall thickness of 600 mm, and for side flueing a maximum wall thickness of 587 mm. This takes into account the minimum appliance side clearances of 5 mm.

If the fixing is a rear exit flue, the template provides the position of the centre for drilling the flue hole with a core drill.
If the flue is a side exit installation then calculate the position of the hole with a slope of 5 mm / metre away from the boiler to the terminal. The flue should fall slightly to the terminal.

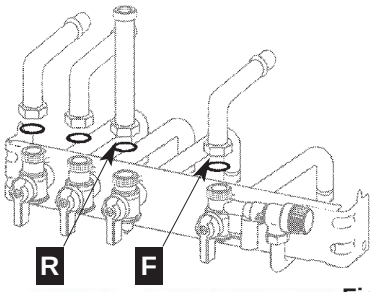

Fig. 11

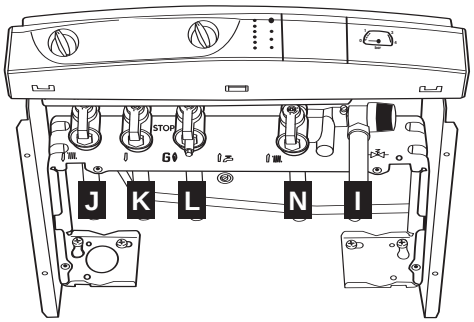

Fig. 12

I	Safety valve outlet	∅15 mm
J	Heating flow	∅22 mm
K	H.W. flow	∅22 mm
L	Gas supply	∅22 mm
N	Heating return	∅22 mm

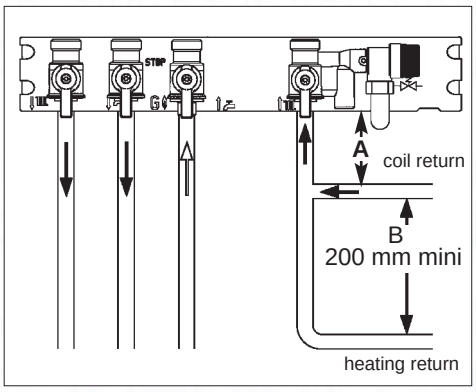

Fig 13

Making the Electrical Connections

Hinge down the electrical box to gain access to the electrical connections. Push in the tabs (**P** fig. 14) on either side of the boiler and pivot the box forward.

Undo the two retaining screws, remove cover and remove cable clamp. (**A** fig. 14)

Connect the live and neutral wires to the multipin plug **D** (fig 15) of the PCB **E** leaving sufficient earth wire to connect to the earthing point. (**B** fig 16)
Note: The connections should be made so that should the lead be pulled from its anchorage, the current carrying wires become taut before the earth wire.

If using a room thermostat or other external control, they can be connected in place of the link on the multipin plug **C** (fig 15).

Note: Use only controls designed for voltage free switching or 24V supply.

Connect multipin plug **C** onto into the socket on the power board. Connect multipin plug **D** to the interface PCB inside the cover (see fig. 15).
Secure the cables using the cable clamp and replace the cover. To prevent damage, the cables should then be routed through the cable support on the right hand side of the chassis.

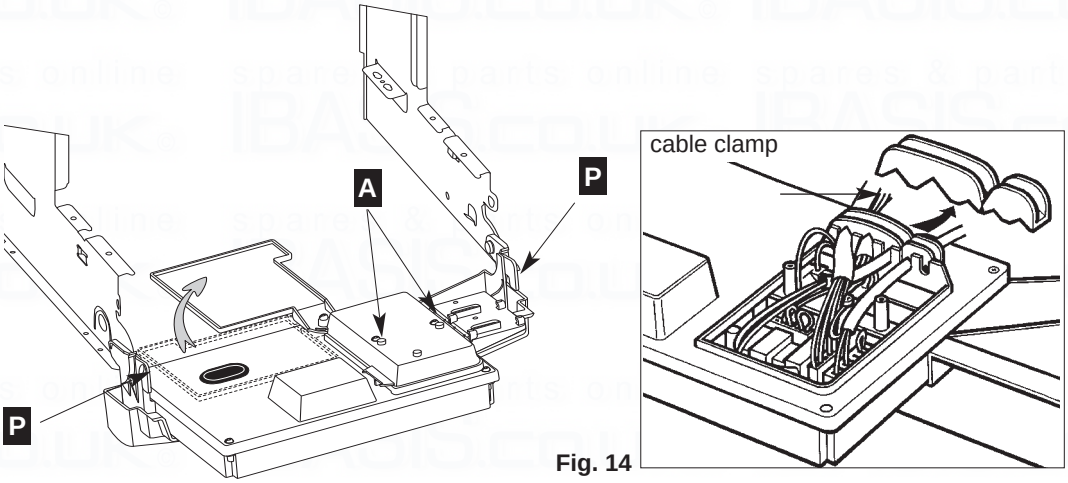

Fig. 14

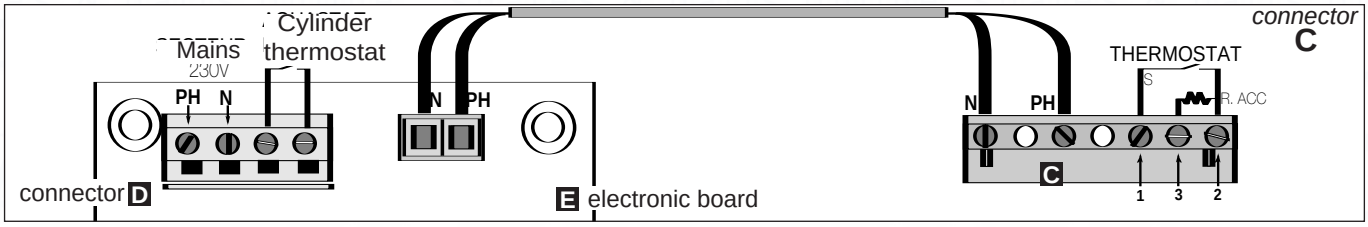

Fig. 15

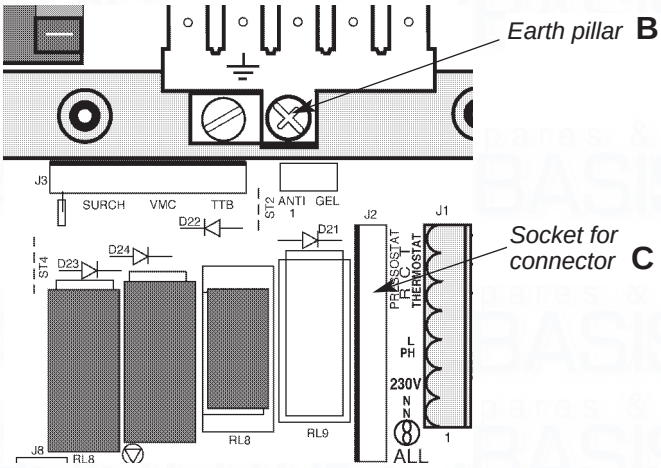

Fig. 16

Wiring Scheme for Britony System Plus Boilers

OPTION 1

Using a hot water priority system with the hot water on constantly and the heating timed. A simple time clock can be used such as the Danfoss Randall 103.

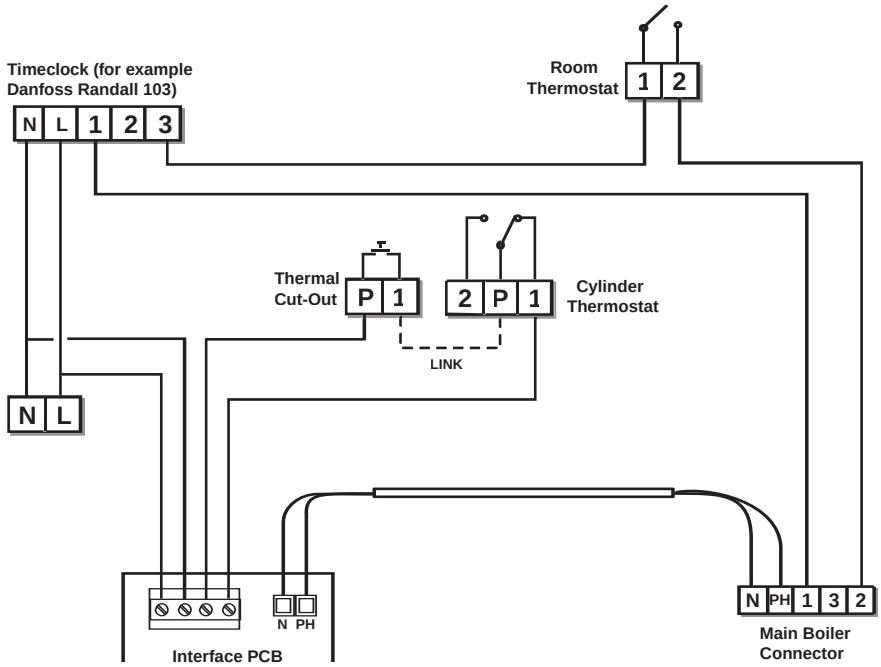

OPTION 2

Using hot water priority with a timed facility for both hot water and central heating. A twin channel clock such as the Horstman Channelplus Model H27 must be used.

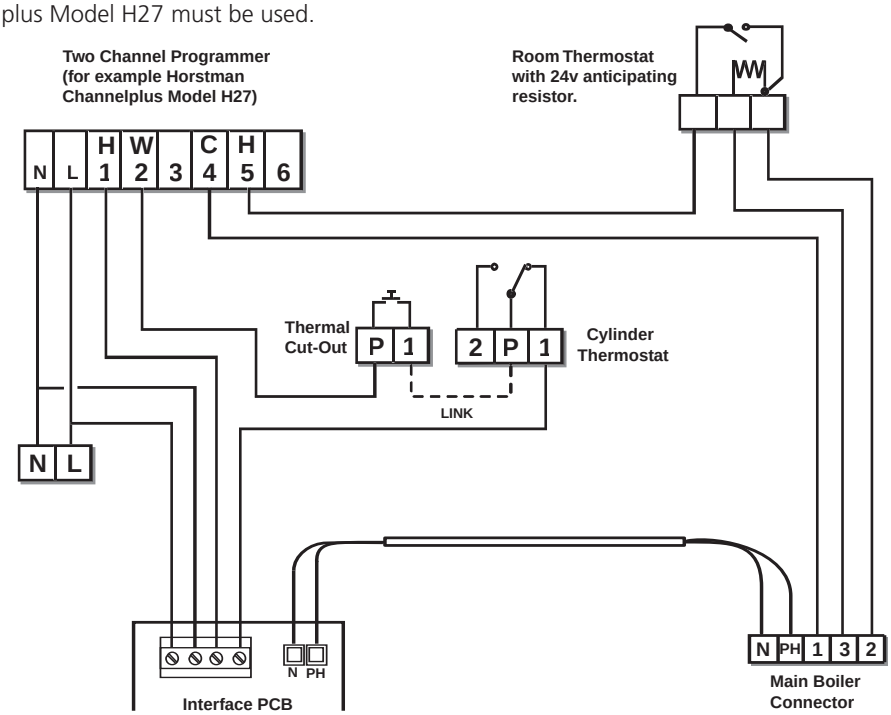

8 Commissioning and Testing

Pre-commissioning

Ensure that the system has been adequately flushed.
Purge gas supply of air and test for soundness.
Carry out final electrical tests to ensure the correct polarity and earthing continuity.

DHW

Open the hot flow tap (32 fig. 22).
Check for water soundness

Central Heating

Open flow and return valves on the boiler.(30 and 33 Fig. 22)
Open the automatic air vent (6 Fig. 17)
Fill system and vent radiators.
Set system pressure and remove filling loop.
Check for leaks.
Manually check pump is free to turn.
Switch on electrical supply.
Turn selector switch (15 fig. 17) to heating and hot water position
Allow pump to run for several minutes.
Isolate electrical supply.
Drain boiler and check water filter (**F** Fig. 11) for installation debris.
Replace filter and recharge system.

Lighting the Boiler

Connect gas pressure gauge to test point (43 Fig. 17).
Turn on the gas supply and boiler gas tap (31 Fig. 22).
Ensure electrical supply is on.
Ensure all external controls are calling for heat.
Turn selector switch (15 fig. 17) to heating and hot water position
Turn the boiler thermostat to maximum (16 fig 17).
The boiler will light.

Allow the boiler to heat system.
Check the inlet gas pressure (working pressure) while the boiler is operating. (Refer to technical data)
Check the operation of the boiler controls and safety devices. (see separate servicing leaflet for details)
Re-flush the system to remove any dissolved oils and fluxes.
Recharge system pressure and introduce any water treatment as required.

Post Commissioning

Ensure system pressure has been set correctly.
Set the by pass.
Set boiler thermostat and controls.
Set programmer to householder's requirements.
Set external controls.
Ensure the Logbook is fully completed with your contact details and required readings and details of the installation.

Handing Over to the Householder

Demonstrate the lighting and operation of the boiler.
Demonstrate how to maintain the system pressure.
Explain the benefits of annual maintenance by a competent person.
Explain how to register guarantee.

Ensure the Householder countersigns the Logbook to confirm that these demonstrations have been carried out and understood.

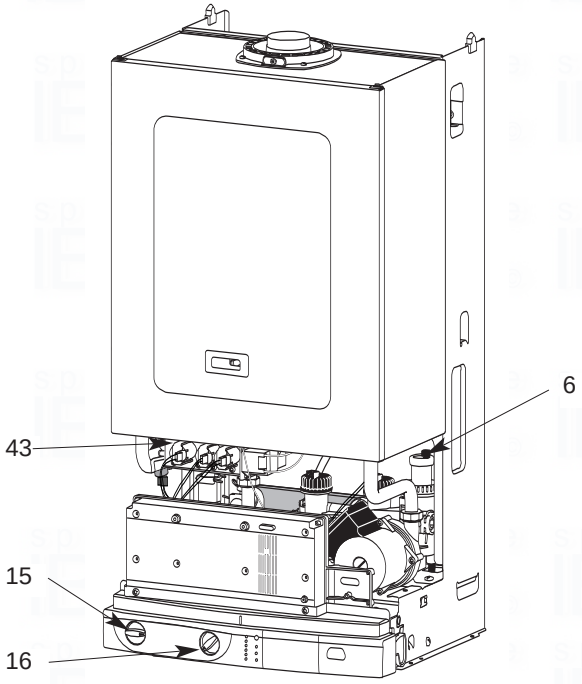

Fig. 17

9 System Guidance

The boiler is suitable for sealed systems only. The maximum working pressure for the appliance is 3 bar. All fittings and pipework connected to the appliance should be of the same standard.

Flushing and Water Treatment

The performance of the appliance could be impaired by system debris or the effects of corrosion. The system must be flushed thoroughly to remove metal filings, solder, machining oils and other fluxes and greases before connecting the boiler. An appropriate flushing and descaling agent should be used, particulary if it is an existing system. Refer to BS 7593 (1992) for guidance. For more information on the use of corrosion inhibitors, flushing and descaling agents, advice can be sought from the manufacturers of water treatment products such as:

Betz Dearborn Ltd
Foundry Lane
Widnes
Cheshire
WA8 8UD
Tel: 0151 424 5351

Fernox Manufacturing
Britannica Works
Clavering
Essex
CB11 4QZ
Tel: 01799 550811

System Controls

The boiler is electrically controlled and is suitable for most modern electronic time and temperature controls.
The addition of such external controls can be beneficial to the efficient operation of the system.
The boiler connections for external controls are 230V and so only controls of 230V or that have voltage free contacts should be used.

By pass and Pump

The boiler is fitted with a pre-adjusted by pass. Although adjustment is not normally necessary, the by pass can be reset by turning screw (**D** Fig. 18) anticlockwise to open the by-pass using the chart below for guidance.
If used on a system with thermostatic radiator valves, the flow rate with the thermostatic valves closed should be adjusted to at least 300 l/hr.The chart below indicates the residual head of the pump available for the system.

Expansion Vessel

The expansion vessel is pre-charged to 0.7 bar (10 lb/in^2). The vessel is suitable for systems up to 145 litres capacity. For systems of greater capacity an additional expansion vessel will be required. Refer to the chart below and BS 7074 pt 1 or BS 5449.

Filling Point

Provision must be made to be able to charge the system on commissioning and to make up any subsequent pressure loss.
The method of connection must utilise approved equipment and must comply with the water regulations. A filling loop can be so installed as to be hidden beneath the boiler.

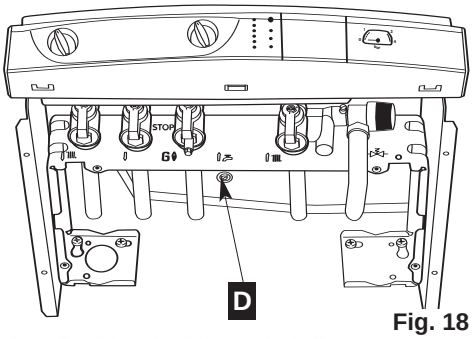

Fig. 18

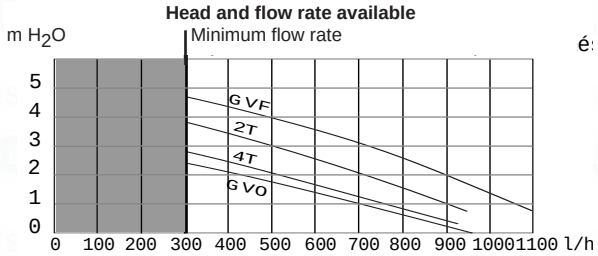

Fig. 19

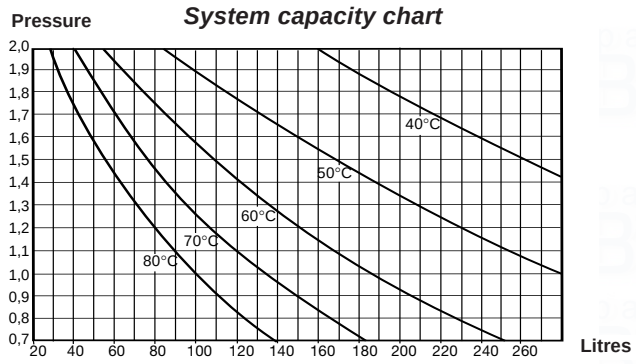

Fig. 20

10 User's Instructions

Control panel (fig. 21)

15. - Three position Selector switch
    - Pilot O
    - Hot water only
    - Hot water + Central heating
16. - Heating flow temperature adjustment
18. - Green indicator - Power ON
19. - Orange indicator - Burner ON
20. - Red indicator - Lock out / flame failure
21. - "RESET" button
22. - Pressure gauge

Isolating Taps (fig. 22)
taps shown in Open position

30. CH Flow isolating valve
31. Gas service tap
32. H.W. flow
33. CH Return isolating valve
34. Pressure relief valve

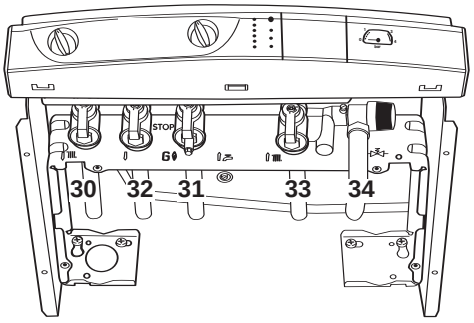

Fig. 22

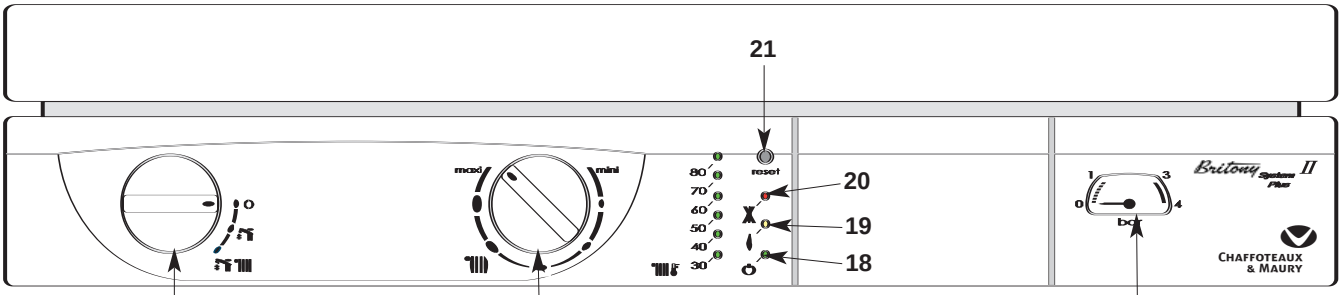

Fig. 21

Switching on

1) Check that the gas service tap is opened at the gasmeter and main power is on.
2) Check that pressure in central heating system is above 0.7 bar and below 2.5 bar with the pressure gauge **22**.
3) Open the gas tap **31** by turning from right to left.
4) The boiler is now ready to use.

Hot Water

1) Turn selector switch **15** to position The green "power on" indicator will light.
2) The orange "burner on" indicator will light and the cylinderwill be heated.

Heating and Hot Water

1) Turn selector switch **15** to position . The green "power on" indicator will light.

2) If the room thermostat (if fitted), the boiler temperature control and the clock (if fitted) are all calling for heat, the orange "burner on" indicator will light and the heating will be on.

When the heating is on, it will be interrupted while the cylinder is reheated. The boiler will switch back automatically to heating when the cylinder is hot. This is normal.

Note: If the boiler has been turned off for some time the first attempt to light it may result in a lockout . If this happens press the reset button **21** and the boiler will light.

To Turn Boiler Off Completely

1) Turn the selector switch **15** to the off position O
2) Turn the gas tap **31** from left to right "STOP".

The outer control panels of the unit's case must only be cleaned with a damp cloth. Do not use abrasive cleaners. The control panel can be wiped with either a damp or dry cloth. Spray polishes mst not be used on the control panel surface or knobs. Care must be taken in preventing any liquid entering the appliance.

NOTE: This appliance must be earthed.

Notes

spares & parts online IBASIS.CO.UK

This appliance is suitable for Natural gas or LPG. A gas conversion must be made by a competent person.

Chaffoteaux & Maury are continuously improving their products and therefore reserve the right to change specifications without prior notice and accepts no liability for any errors or omission in the information contained in this document.

Manufacturer: **Chaffoteaux & Maury - France**

Commercial subsidiary: **MTS (GB) Limited**
MTS Building
Hughenden Avenue
High Wycombe
Bucks HP13 5FT

Telephone: (01494) 755600
Fax: (01494) 459775
Internet: www.chaffoteaux.co.uk
E-mail: info@uk.mtsgroup.com

Technical Support Help Line: 0870 241 8180
Customer Service Help Desk: 0870 600 9888

1309457C - 03/2004