Britony combi SE

COMBINATION BOILER

Heating and Instantaneous Domestic Hot Water

Fanned Flue system

Installation and Operating instructions

These instructions Must Be Left With The Appliance.

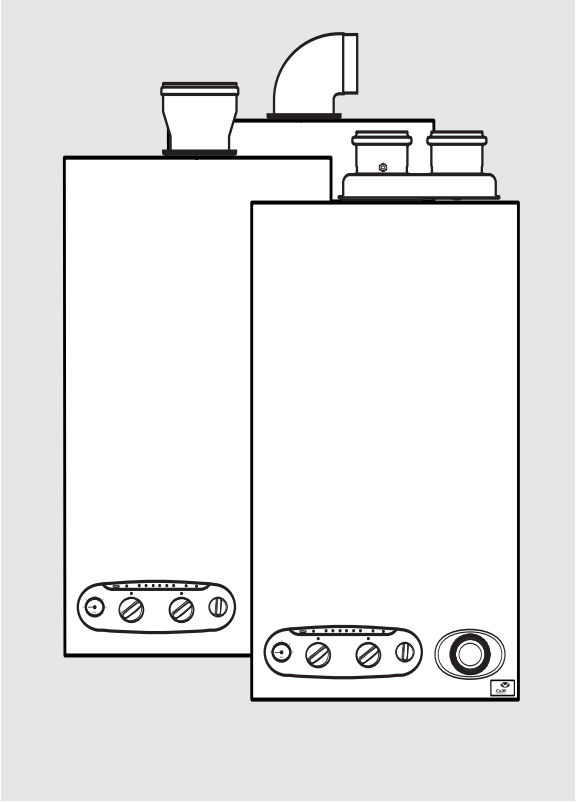

Manufactures N°	Model Type	Gas Council N°
200906812037.31	Britony SE 80 Nat	47 - 980 - 16
200906812027.31	Britony SE 80 L.P.G.	47 - 980 - 18
200906813037.31	Britony SE 100 Nat	47 - 980 - 17
200906813027.31	Britony SE 100 L.P.G.	47 - 980 - 19

GB IE

benchmark
The code of practice for the installation, commissioning & servicing of central heating systems

CE

C&M
CHAFFOTEAUX & MAURY

These instructions are suitable for the following boilers :

Britony Combi SE. 80
Britony Combi SE.100

Do not forget the Log Book!

Chaffoteaux & Maury supports Benchmark, the heating industry code to ensure the correct installation, commissioning and servicing of domestic central heating systems.

To The Householder

Make sure you have a completed Log Book for your boiler. This provides a record of the commissionning of your boiler. It contains important information about your particular installation that may be required by service engineers. The Log Book will also provide contact details for the installer should you need guidance in the use of this appliance or if there are any problems.

As with your car, your boiler will work more reliably and efficiently if regularly serviced. We recommend an annual service check. The service history of the appliance will be recorded on the Log Book.

In the unlikely event of any problems with your boiler or system you should first contact your installer. If your installer cannot resolve the problem he should telephone our national service helpline.

A charge may be made if Chaffoteaux & Maury Service is called out to resolve a non-product related fault.

Your statutory rights are not affected.

TO CONTACT C&M SERVICE, PLEASE CALL THE NATIONAL WARRANTY HELPLINE ON:
0870 600 9888

To The Installer

As part of the commissioning of this appliance it is vital that the Log Book is completed and given to the Householder. Please ensure that your customer is aware of the importance of keeping the Log Book safe as a record of the installation and the appliance service history.

Please ensure that your customer is aware of the correct operation of the system, boiler and controls.

CUSTOMER CARE

Chaffoteaux & Maury Ltd., as a leading manufacturer of domestic and commercial water heating appliances is committed to providing high quality products and a high quality after sales service. If it is necessary to contact an engineer, then telephone the national warranty helpline 0870 600 9888.
Advice on installation or servicing can also be obtained by contacting the Technical Department on:

Tel: 0870 600 9888
Fax: 01494 459775

GUARANTEE

The manufacturer`s guarantee is for 12 months from the date of purchase. The guarantee is invalidated if the appliance is not installed in accordance with the recommendations made herein or in a manner not approved by the manufacturer. To assist us in providing you with an efficient after sales service, please return the guarantee registration card enclosed with the boiler without delay.

STATUTORY REQUIREMENTS

The installation of this appliance must be carried out by a CORGI Registered person or other competent person and in accordance with the requirements of the Gas Safety (Installation and Use) Regulations.
In addition, the installation must also comply with the current byelaws of Local Water Undertakings, Building Regulations, IEE Wiring Regulations, Local Authority Building Standards (Scotland) Regulations and the Safety Document 635 The Electricity at work Regulation. The appliance named below does not contain any asbestos or asbestos products, or mercury derivatives. Additional CFC's have not been used in this product.
The appliance does not contain any potential hazard in relation to the COSHH regulations.
It should also be carried out in accordance with current editions of the following British Standards Codes of practice: BS 6891, BS 5440 parts 1 and 2, BS 5449 part 1, BS 7593, BS 6798, BS 5546, BS 4814, BS 7074 part 1 and 2, BS 7671 and Institute of Gas Engineers document IGE/UP/7.
If there is a possibility of the incoming mains water pressure exceeding 10 bar then a suitable pressure limiting valve must be fitted where pressures exced 6 bars a pressure limiting is preferred.
Precautions: During servicing, keep the dust generation to a minimum and avoid inhaling any dust and contact with the skin and eyes. Normal handling and use will not present any discomfort, although some people with a history of skin complaints may be susceptible to irritation. When disposing of the ceramic lining, ensure that it is securely wrapped and wash hands after contact.

Contents

	Page
CUSTOMER CARE	2
Guarantee	2
Statutory Requirements	2
CONTENTS	3
INTRODUCTION	3
DESCRIPTION	4
Location of components	4
TECHNICAL DATA	5
DIMENSIONS	5
OPERATION	7
Domestic Hot Water Mode	7
Central Heating Mode	7
INSTALLATION REQUIREMENTS	8
Location	8
Flue	8
Ventilation	8
Gas Supply	8
Electrical Supply	8
INSTALLING THE BOILER	8
Installation	8
Method of positioning the boiler on the wall	8
Connecting the boiler to the system	9
Safety valve	9
Fitting the horizontal flue	9
Making the electrical connections	9
Adjustement	10
COMMISSIONING AND TESTING	11
Pre-commissioning	11
DHW	11
Central Heating	11
Lighting the boiler	11
Post Commissioning	11
Handing over to the Householder	11
SYSTEM GUIDANCE	12
Showers	12
Flushing and Water Treatment	12
System Controls	12
Bypass and pump	12
Expansion Vessel	12
Filling Point	12
USER'S INSTRUCTIONS	13
Control panel	13
Isolating taps	13
Switching on	13
Hot water	13
Heating	13
To Turn boiler Off Completely	13
INSTRUCTION FOR SETTING THE BUILT IN CLOCK	14
General layout	14
To set the time	14
To set the "On" and "Off" times	14
To select function mode	14
INCORRECT FUNCTION	15
NOTES	15

1 Introduction

The BRITONY COMBI SE is a fully automatic, wall mounted, low water content combination boiler. It is a room sealed, fan assisted, balanced flued appliance providing central heating and mains pressure domestic hot water on demand. It has electronic ignition and is suitable for all modern electrical control systems. The boiler is designed for sealed systems only and a circulating pump, expansion vessel together with a pressure gauge and safety valve are included within the boiler.

The standard horizontal flue kit is suitable for lengths 300 mm minimum to 790 mm maximum and includes an elbow adapter that can be rotated through 360˚. The horizontal flue can extend up to 3 metres using 1 metre flue extension kits. 45˚ and 90° flue bends are also available as accessories.

The BRITONY COMBI SE is also suitable for concentric vertical flueing and twin pipes. Adapters and accessoiries are available.

The BRITONY COMBI SE is Specified for Natural Gas or for LPG. G30 or G31.
Conversions are factory fitted

2 Description

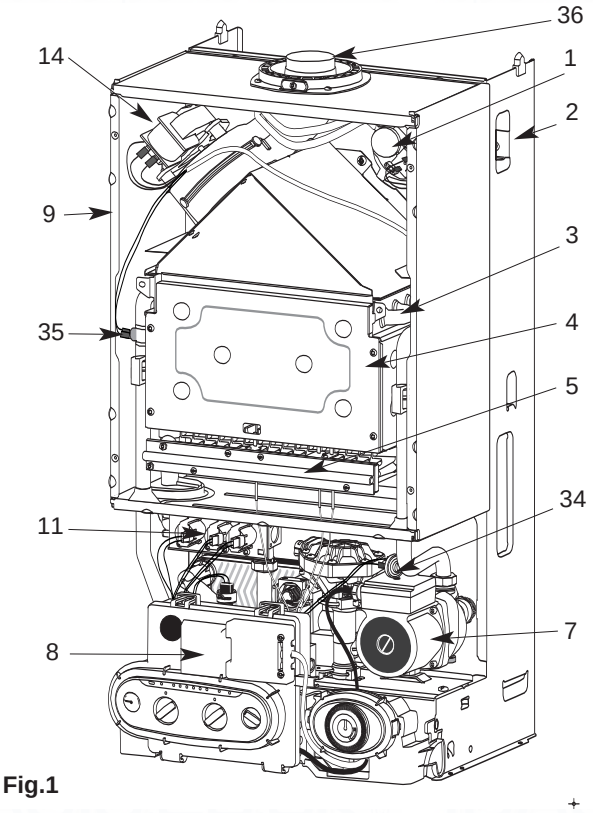

Fig.1

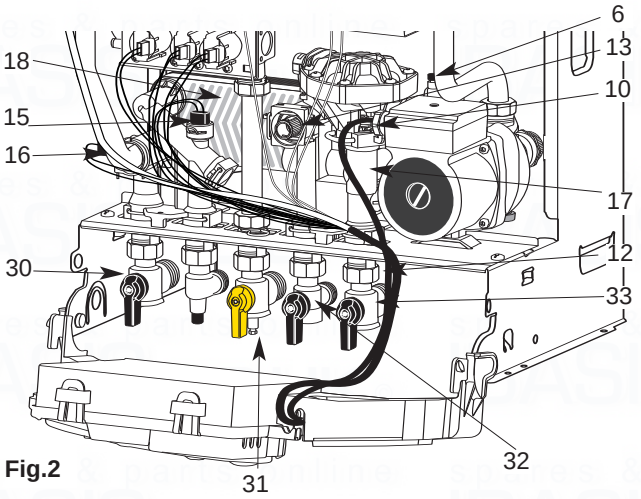

Fig.2

Location of components

1. - Air pressure switch
2. - Steel chassis complete with expansion vessel
3. - Main heat exchanger
4. - Combustion chamber
5. - Multi- gas burner assembly comprising ignition and ionisation electrodes
6. - Automatic air separator and automatic vent
7. - Pump
8. - Electrical box
9. - Sealed chamber
10. - DHW detector
11. - Gas valve assembly
12. - CH water filter
13. - DHW activator
14. - Flue hood with fan
15. - Hot water control thermistor
16. - Central heating control thermistor
17. - Three way valve
18. - Secondary heat exchanger
19. - Two position Selector switch

    OFF «O»

    ON «I»
20. - Domestic hot water temperature adjustment
21. - Heating flow temperature adjustment
22. - Heating temperature indicator
23. - Green indicator - Power ON
24. - Orange indicator - Burner ON
25. - Red indicator - Lock out / flame failure
26. - Reset button
27. - Pressure gauge
28. - DHW mode indicator
29. - Heating mode indicator
30. - Heating Flow isolating valve
31. - Gas service tap
32. - Water service tap
33. - CH Return isolating valve
34. - Central Heating water pressure switch
35. -.Overheat safety cutout
36. - Flue sampling point

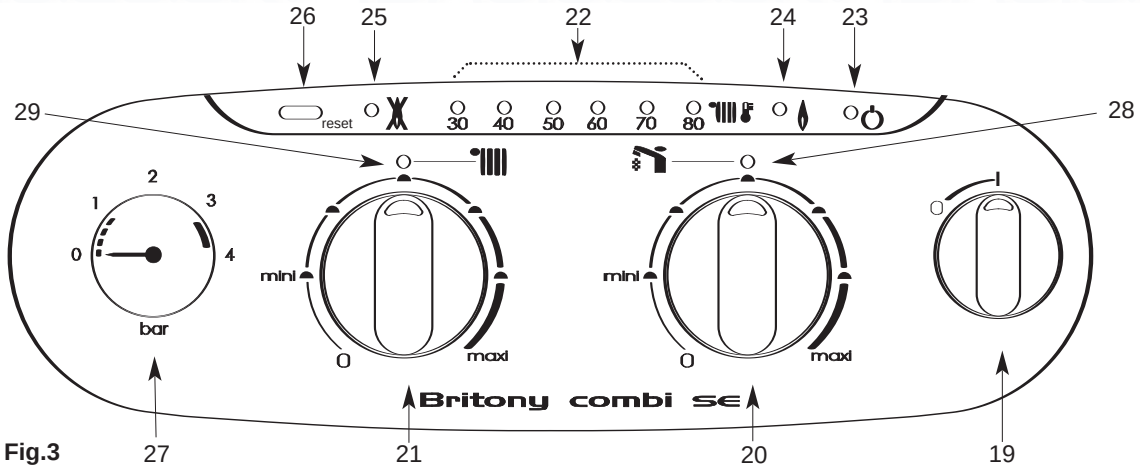

Fig.3

3 Technical Data

Britony combi	SE.80	SE.100
Appliance category	Cat II $_{2H\ 3+}$	Cat II $_{2H\ 3+}$
Heat input C/H & DHW Gross		
Maximum in kW	28.7	34.6
Maximum in Btu/h	98000	117900
Heat output C/H & DHW Gross		
Maximum in kW	24	28
Maximum in Btu/h	81910	95600
C/H operating temperature		
Max:	85° C	85° C
Mini:	35° C	35° C
C/H circuit pressures		
Min operating in bar	0.7	0.7
in lb/in²	10	10
Max operating in bar	2.5	2.5
in lb/in²	36.3	36.3
DHW flow rates		
ΔT 30 in l/min	11.9	13.9
in gal/min	2.62	3.06
ΔT 35 in l/min	10.2	11.9
in gal/min	2.24	2.62
Cold water mains pressures		
Min operating in bar	0.5	0.5
in lb/in²	7.25	7.25
Max operating in bar	10	10
in lb/in²	145	145
Flow limiter rate in l/min	8	10
Compartment ventilation	**not required**	
Natural gas G20 10 minutes from lighting from cold		
Gas rate		
Maximum in m³/h	2.74	3.29
Maximum in ft³/h	97	116
Inlet pressure		
Nominal in mbar	20	20
Nominal in in wg	8	8
Burner pressure		
Nominal in mbar	11	12.8
Nominal in in wg	4.4	5.1
Burner injector diameter		
Natural gas G20 in mm	1.23	1.28

Britony combi	SE.80	SE.100
PROPANE L.P.G. G31		
Gas rate		
Maximum in kg/h	2.00	2.42
Maximum in ft³/h	37	44.8
Inlet pressure		
Nominal in mbar	37	37
Nominal in in wg	14.8	14.8
Burner pressure		
Nominal in mbar	35	30.4
Nominal in in wg	14	12.2
BUTANE L.P.G. G30		
Gas rate		
Maximum in kg/h	2.04	2.45
Maximum in Lbs/h	4.50	5.40
Inlet pressure		
Nominal in mbar	28	28
Nominal in in wg	11.2	11.2
Burner pressure		
Nominal in mbar	26,7	24
Nominal in in wg	10.7	9.6
Burner injector diameter		
LPG G30 and G31 in mm	0.70	0.76
Safety discharge		
in bar	3	3
in lb/in²	43.5	43.5
Expansion vessel		
Pre-charge pressure in bar	0.7	0.7
Pre-charge pressure in lb/in²	10	10
Net capacity at 3 bar in liter	6	6
Automatic by-pass		
Electrical characteristics		
Supply	230 v	230 v
Consumption	150 w	150 w
Protection	IP 44	IP 44
Fuse n°1	2 A	2 A
Fuse n°2	1.25 A	1.25 A
External controls	24 v	24 v

4 Dimensions

Weights

With packaging :
- Britony combi 80 : 44.2kg
- Britony combi 100 : 45.2kg

Without packaging :
- Britony combi 80 : 42.2kg
- Britony combi 100 : 43.2kg

Lift weight :
- Britony combi 80 : 36.2 kg
- Britony combi 100 : 37.2kg

Tails diameter

I	Safety valve outlet	Ø 15 mm
J	Heating flow	Ø 22 mm
K	D.H.W. flow	Ø 15 mm
L	Gas supply	Ø 22 mm
M	Cold water inlet	Ø 15 mm
N	Heating return	Ø 22 mm

Dimensions (continued)

Outer case dimensions :

- Width :	440 (minimum space required 450)
- Height :	850
- Depth :	380

All dimensions in mm

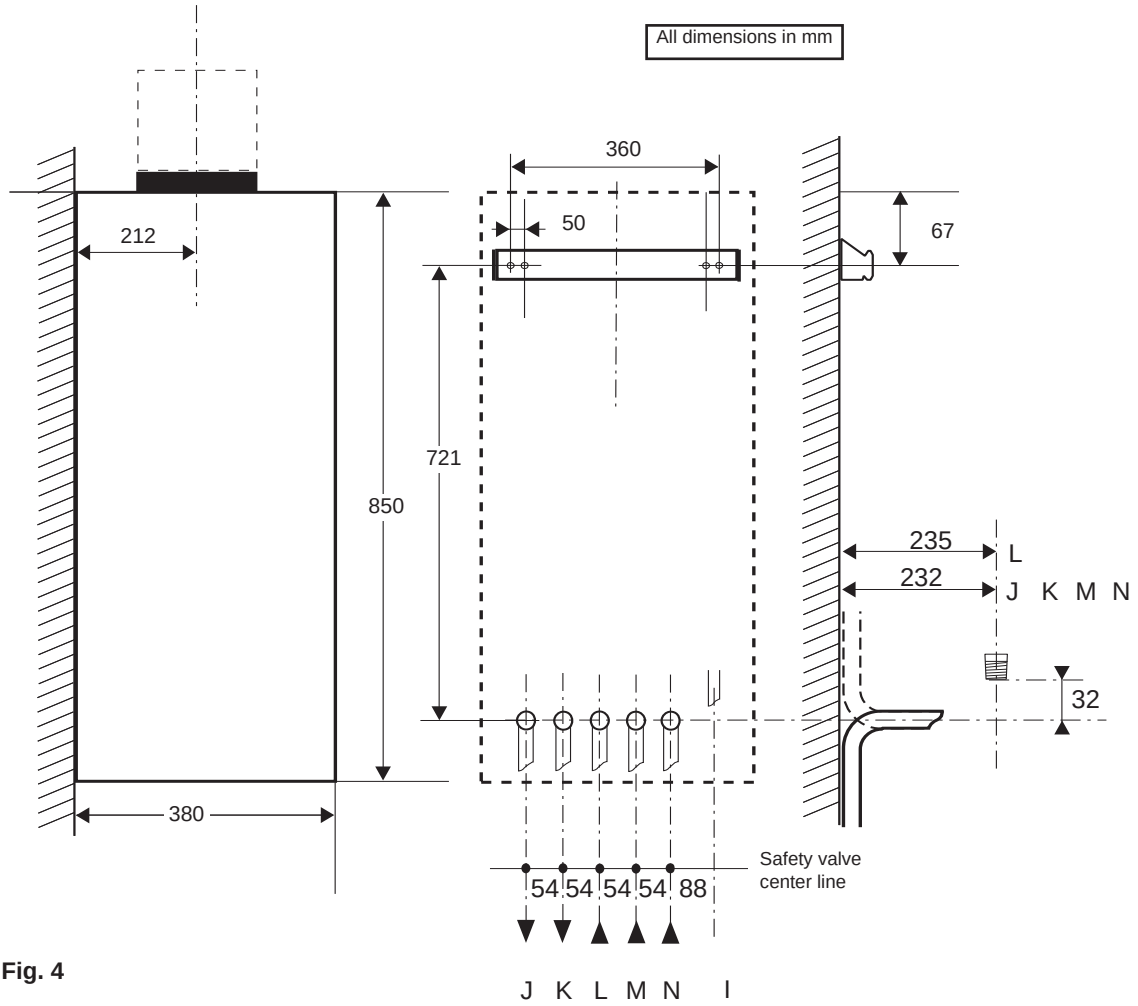

Fig. 4

Minimum clearances :

- Both sides	5 mm
- Above casing	170 mm
- Below casing	200 mm
- Front (for servicing)	500 mm
- Front (in operation)	5 mm

The boiler is suitable for the flue types:
- type C 12
- type C 32 xx, C32 xy or C 52

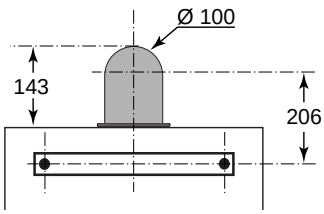

Type C 12

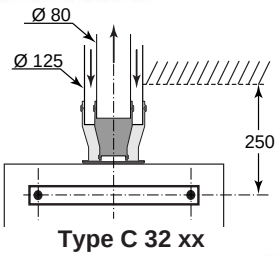

Type C 32 xx

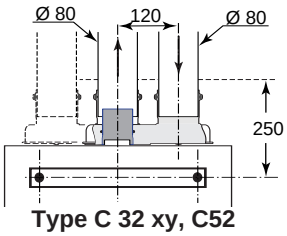

Type C 32 xy, C52

Fig. 5

All dimensions in mm

5 Operation

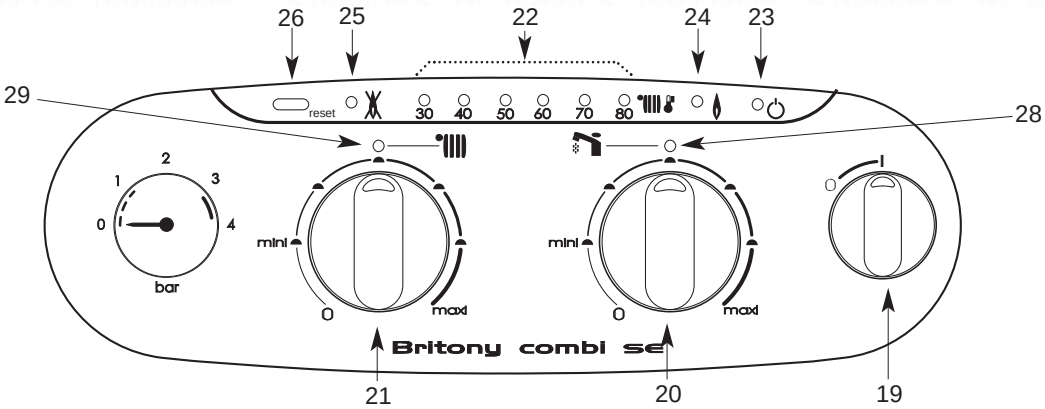

Fig. 6

Domestic Hot Water Mode

In order to supply hot water, the main switch **19** Fig. 6 must be in ON position **I** This will be confirmed by the green indicator light ⏻ **23** Fig. 6. Turn the selector switch **20** clock wise to establish the green DHW indicator **28** Fig. 6.

When a tap or shower is turned on, the flow of mains water, above 2 litres per min., will activate the 3 way valve **f** Fig. 7 to move to the DHW position. The pump will now circulate primary water heated by the main heat exchanger through the secondary heat exchanger.

The first stage solenoid **a** Fig. 7 and safety solenoid **c** Fig. 7 open together to allow gas to the burner. The ignition sequence begins and a continuous high speed spark ignites the gas. As soon as a flame is detected the orange indicator bulb 🔥 **24** Fig. 6 will light and the second stage solenoid **b** Fig. 7 opens to allow the full gas rate. If a flame is not detected, after 8 seconds, the security solenoid closes and shuts off the gas. The red lockout indicator bulb **25** Fig. 6 will show. The domestic hot water temperature is controlled by the hot water control thermistor **d** Fig. 7 and the central heating control thermistor **e** Fig. 7. This system anticipates the changes of temperature in the secondary heat exchanger and ensures accurate temperature regulation.

When the tap is closed the burner is extinguished and the pump stops.

Priority will be given to a demand for hot water. This will interrupt the central heating for the duration of hot water delivery.

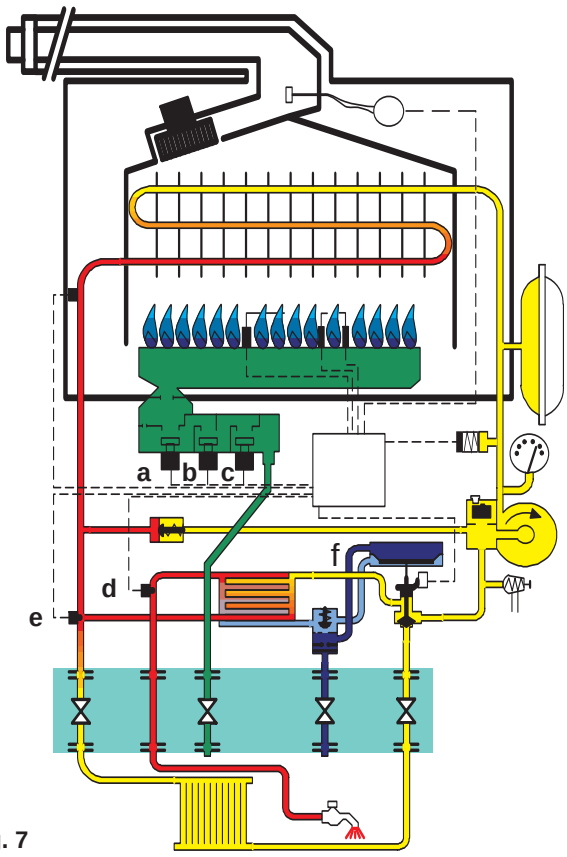

Fig. 7

Central Heating Mode

To be able to supply heating, the main switch **19** Fig. 6 must be in **I** position. This will be confirmed by the green indicator light ⏻ **23** Fig. 6. Turn the selector switch **21** clock wise to establish the green heating indicator **29** Fig. 6.

When there is a demand for heating (either from the room thermostat or the clock) and the boiler temperature control is calling for heat. The pump starts allowing the ignition sequence to begin. The first stage solenoid **a** Fig. 7 and safety solenoid **c** Fig. 7 open together to allow gas to the burner. The ignition sequence begins and a continuous high speed spark ignites the gas. As soon as a flame is detected the orange indicator bulb 🔥 **24** Fig. 6 will light. After 45 seconds the second stage solenoid **b** Fig. 7 opens to allow the full gas rate. If a flame is not detected, after 8 seconds, the security solenoid closes and shuts off the gas. The red lockout indicator bulb **25** Fig. 6 will show.

The central heating flow temperature is controlled by the central heating control thermistor **e** Fig. 7. The boiler has been designed to minimise cycling and will not attempt to relight for at least 3 minutes after the boiler thermostat has been satisfied (it is possible to reduce the time to 30 s if necessary). When the room thermostat is satisfied the burner will switch off and the pump will remain running for a further 4 minutes before it to stops.

NB : It is possible to override the 3 minute delay by pressing the RESET button **26** Fig. 6.

6 Installation Requirements

Location

The boiler can be installed on any suitable internal wall. Provision must be made to allow the correct routing of the flue and siting of the terminal to allow the safe and efficient removal of the flue products. A compartment or cupboard may be used provided that it has been purpose-built or modified for the purpose. It is not necessary to provide permanent ventilation for cooling purposes. Detailed recommendations are given in BS 5440 pt 2. If it is proposed that it is installed in a timber framed building then reference must be made to British Gas Document DM2, or advice sought from CORGI.

Flue

Detailed information on flue assembly is contained in the appropriate starter pack.

The boiler must be installed so that the flue terminal is exposed to the free passage of external air at all times. It must not be allowed to discharge into another room or space such as an outhouse or closed lean-to. The minimum acceptable clearances are shown below:

- A Directly below an opening, window, etc	300 mm
- B Above an opening, window, etc	300 mm
- C Horizontally to an opening, window, etc	300 mm
- D Below gutters, soils pipes or drain pipes	75 mm
- E Below eaves	200 mm
- F Below balconies or car port roof	200 mm
- G From a vertical drain pipe or soil pipe	150 mm
- H From an internal or external corner	300 mm
- I Above ground roof or balcony level	300 mm
- J From a surface facing the terminal	600 mm
- K From a terminal facing the terminal	1200 mm
- L From an opening in the car port into the dwelling	1200 mm
- M Vertically from a terminal on the same wall	1500 mm
- N Horizontally from a terminal on the same wall	300 mm
- Q Fixed by Ubbink Rolux 4 GM flue terminal	

It may be necessary to protect the terminal with a guard. Reference should be made to the Building Regulations for guidance. Suitable guards may be obtained from the following manufacturer:

Quinnel Barret & Quinnel Wireworks
Old Kent Road
London SE15 1NL
Tel: 0171 639 1357

Ventilation

The room in which the boiler is installed does not require specific ventilation. **If it is installed in a cupboard or compartment permanent ventilation is not required for cooling purposes.**

Gas Supply

The gas installation and soundness testing must be in accordance with the requirements of BS 6891.The boiler requires a 22 mm supply. Ensure that the pipe size is adequate for demand including other gas appliances on the same supply.

Electrical Supply

The appliance requires an earthed 230V - 50 Hz supply and must be in accordance with current I.E.E. It must also be possible to be able to completely isolate the appliance electrically. Connection should be via a 3 amp fused double-pole isolating switch with contact separation of at least 3 mm on both poles. Alternatively, a fused 3 Amp. 3 pin plug and unswitched socket may be used, provided it is not used in a room containing a bath or shower. It should only supply the appliance.

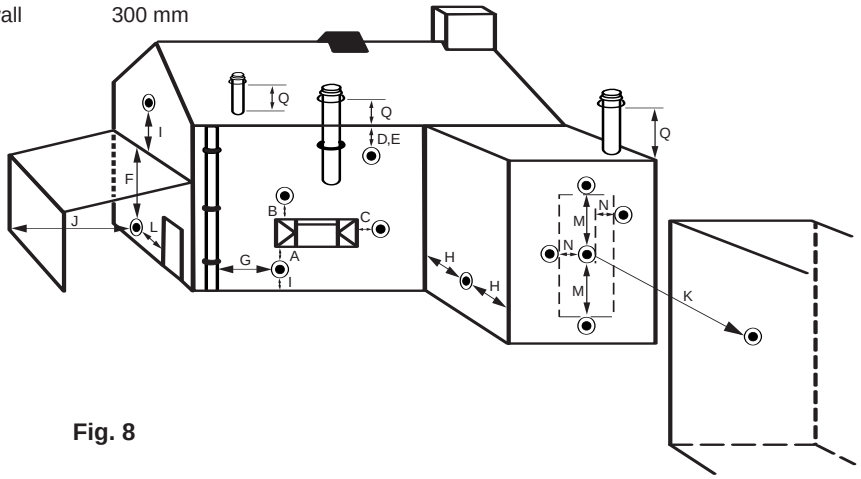

Fig. 8

7 Installing the Boiler

Please check that you are familiar with the installation requirements before commencing work.(section 6)

Installation

The installation kit includes the flue components and the flue installation instructions with the boiler you have the following items :

- Hanging bracket
- A paper template (showing the dimensions of the boiler with 5 mm side clearances and fitting instructions)
- Connection tails
- Screws and wall plugs
- Connection washers and filters

Method of positioning the boiler on the wall.

The paper template can be used to ensure the correct positioning of kitchen cabinets etc.

The paper template has to be fixed to the wall and used to locate the position of the hanging bracket, the centre for the flue hole and, if required, the fixings for the pre-piping jig.

Drill and plug the wall and secure the hanging bracket using the screws provided. Remove the boiler from its packaging as shown in fig. 9 and remove the outer case as shown in fig.10.

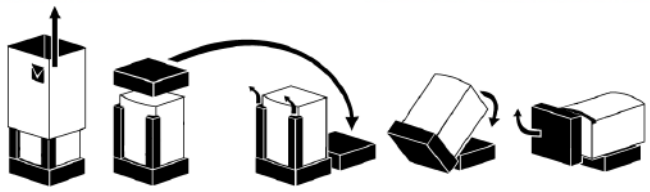

Fig. 9

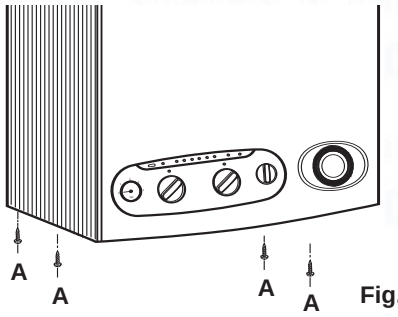

Fig. 10

Place the boiler on the wall on the hanging bracket.
If required, there is space for all piping to pass behind the boiler. Using fig. 11 for reference, connect the gas and water pipes and the valves to the base of the appliance using the tails provided. There is a 190 mm space between the valves and the wall to make these connections.

Connecting the boiler to the system

- Hinge down the front panel (fig. 11) to access to the valve connections
- Remove the yellow caps and connect the boiler to the taps using washers provided in the plastic bag

3 x fibre washers for the C/H flow, hot water outlet and cold supply inlet

1 x washer mesh filter "**F**" CH return connection.

1 x rubber washer "**R**" for gas connection.
Provision must be made to fill and recharge the system pressure. This can be achieved using a filling loop or other methods approved by the local water authority.

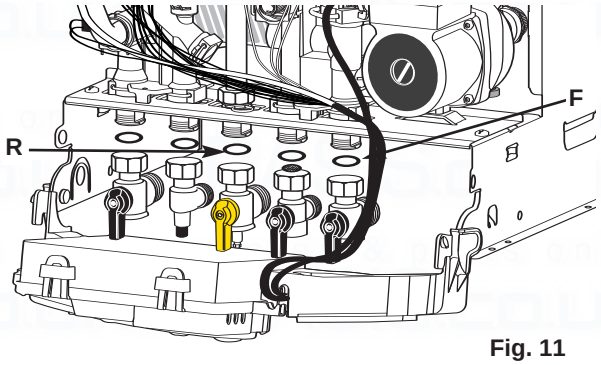

Fig. 11

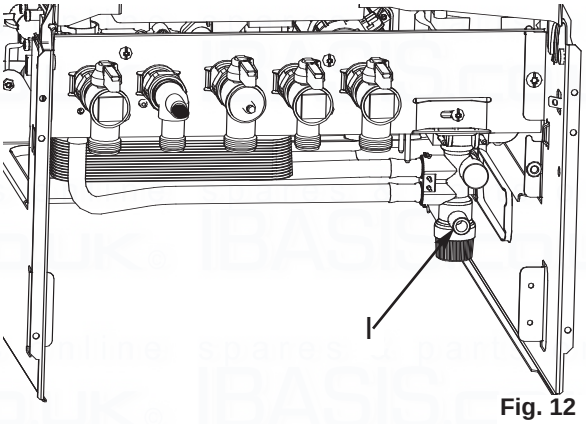

Fig. 12

Safety valve
The pressure relief valve tube is clear silicone. It should terminate below the boiler over a tundish or 22 mm pipe (see **I** fig 12) which should in turn discharge safely outside the premises. Care should be taken that it does not terminate over an entrance or window or where a discharge of heated water could endanger occupants or passers by.

The system should be carefully checked for leaks, as frequent refilling could cause premature system corrosion or unnecessary scaling of the heat exchanger.

Fitting the Horizontal Flue
The instructions for the vertical and biflux (twin pipe) flue options are included with the relevant adapter kits.

The standard flue supplied with the appliance is suitable for lengths from 300 mm minimum to 790 mm maximum. This means for rear flueing, the standard kit will accommodate a maximum wall thickness of 600 mm, and for side flueing a maximum wall thickness of 587 mm. This takes into account the minimum appliance side clearances of 5 mm.

If the fixing is a rear exit flue, the template provides the position of the centre for drilling the flue hole with a core drill.
If the flue is a side exit installation then calculate the position of the hole with a slope of 5 mm / metre away from the boiler to the terminal. The flue should fall slightly to the terminal.

Making the Electrical Connections

Connect the live and neutral wires of the main cable. Note: The connections should be made so that should the lead be pulled from its anchorage, the current carrying wires become taut before the earth wire.

If using a room thermostat or other external control, undo the two retaining screws **B**, remove cover **V** (fig 15)**,** they can be connected in place of the link on the multipin plug.**"C"**.
Connect multipin plug into the socket on the power board. Replace the cover.

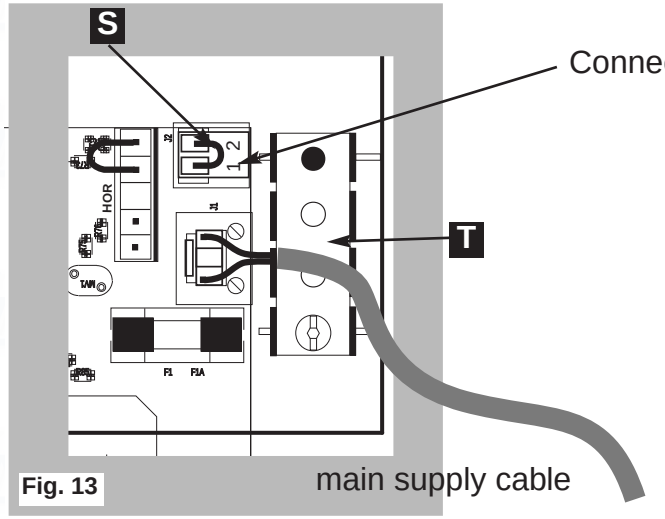

Fig. 13

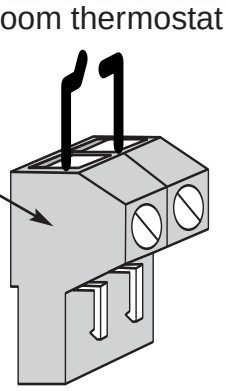

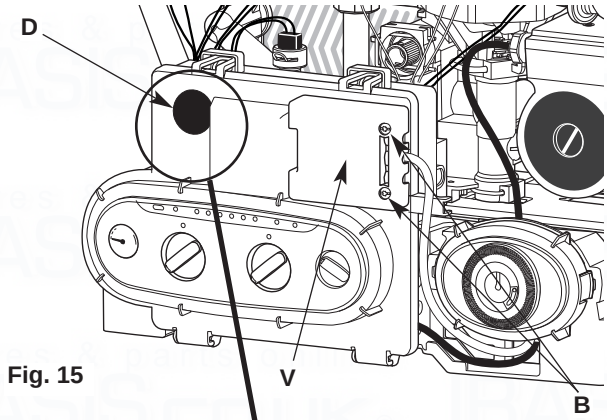

Fig. 15

ADJUSTMENT

Choice of mode :

- Function without room thermostat bridge "**S**" remains in place.
- Function with room thermostat remove bridge "**S**", room thermostat connected as shown on connector "**C**" (fig. 14).

The external control switches both burner and pump. The external control switches the pump off after a delay of 3 min 30'

Choice of boiler operation :

In order to make these adjustment you will need to access the front of the electrical box.

Isolate mains electrical supply to boiler.

Remove boiler outer casing.

Remove rubber cover "**D**" (fig. 15) on face of electrical box.

Adjustment on the PCB Central Heating Mode (fig. 16) :

- P3 : potentiometer TAC (Temporisation Anti Cycle) may now be adjusted between 30 seconds and 3 minutes (see detail) (factory set at 3 minutes).
- JP3 : the spade connector (fig. 14) allows the gas rate to be reduced to 1/3 performance by positionning spade across pins as shown (fig. 14).
  Full performance across pins as shown (fig. 14).

After completling adjustments replace rubber cover and refit outer casing.

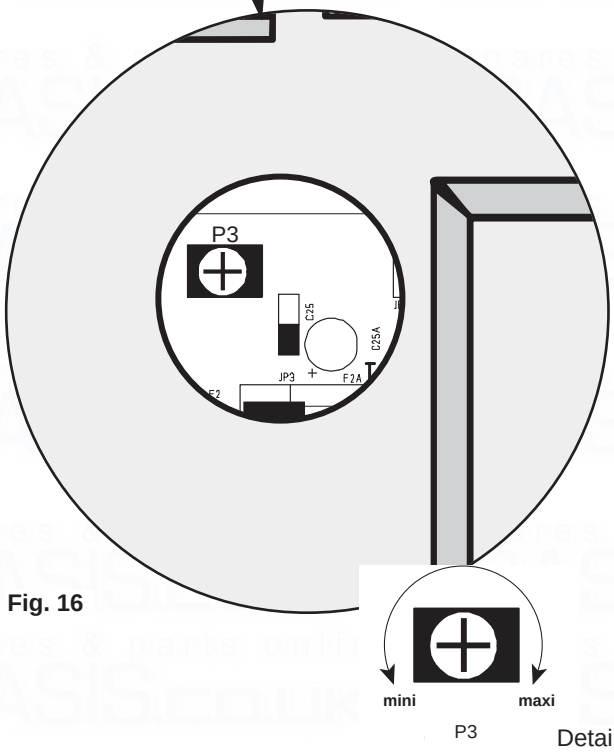

Fig. 16

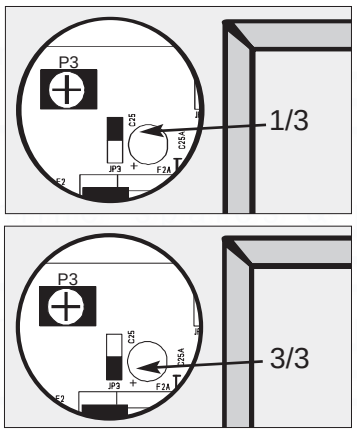

Fig. 14

8 Commissioning and Testing

Pre-commissioning
Ensure that the system has been adequately flushed.
Purge gas supply of air and test for soundness.
Carry out final electrical tests to ensure the correct polarity and earthing continuity.

DHW
Open the main cold feed valve.
Open all hot taps to purge DHW system.
Check for water soundness.
Check flow rate at the bath tap is set correctly (see technical data).

Central Heating
Open flow and return valves on the boiler **30** and **33** (fig 17)
Open the automatic air vent **6** (fig 17)
Fill system and vent radiators.

Set system pressure and remove filling loop.
Check for leaks.
Manually check pump is free to turn.
Switch on electrical supply.
Turn selector switch **19** (fig 18) to On position **I** Turn the boiler thermostat to maximum.
Allow pump to run for several minutes.
Isolate electrical supply.
Drain boiler and check water filter for installation debris.
Replace filter and recharge system.

Lighting the Boiler
Connect gas pressure gauge to test point **11** (Fig. 18).
Turn on the gas supply and boiler gas tap **31** (Fig. 17).
Ensure electrical supply is on.
Ensure all external controls are calling for heat.

Turn selector switch **19** (fig. 18) to On position **I**

Turn the boiler thermostat to maximum **21** (fig 18).
The boiler will light.
Allow the boiler to heat system.
Check the inlet gas pressure (working pressure) while boiler is operating in hot water mode.(Refer to technical data).
Check the operation of the boiler controls and safety devices.(see separate servicing leaflet for details)
Set the by pass (Refer to system guidance).
Re-flush the system to remove any dissolved oils and fluxes.
Recharge system pressure and introduce any water treatment as required.

Post Commissioning

Ensure system pressure has been set correctly.
Set boiler thermostat and controls.
Set programmer to householder's requirements.
Set external controls.
Ensure the Logbook is fully completed with your contact details and required readings and details of the installation.

Handing Over to the Householder

Demonstrate the lighting and operation of the boiler.
Demonstrate how to maintain the system pressure.
Demonstrate the operation and setting of the built-in clock.
Explain the benefits of annual maintenance by a competent person.
Explain how to register guarantee.
Ensure the Householder countersigns the Logbook to confirm that these demonstrations have been carried out and understood.

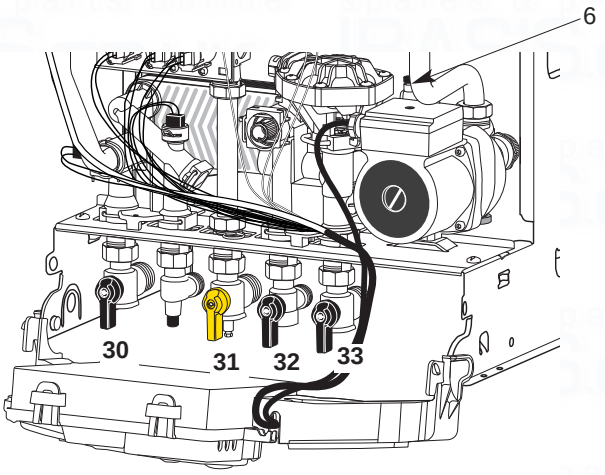

Fig. 17

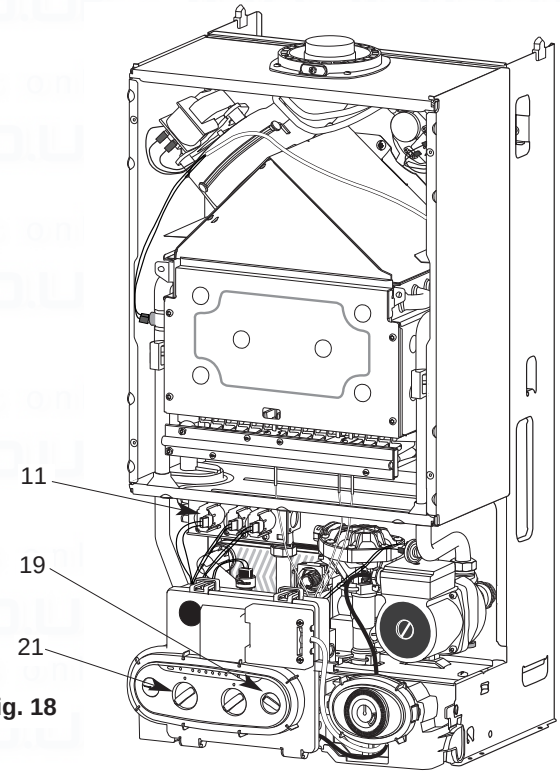

Fig. 18

9 System Guidance

The boiler is suitable for sealed systems only. The maximum cold water mains pressure for the appliance is 10 bar. All fittings and pipework connected to the appliance should be of the same standard. If there is a possibility of the incoming mains pressure exceeding 10 bar, particularly at night, then a suitable pressure limiting valve must be fitted.

The boiler is designed to provide hot water on demand. If there is a requirement for greater demands, for example if the property has several bathrooms and cloakrooms, a vented or unvented hot water storage system should be used.

Showers

Any shower valves used with the appliance should be of a thermostatic or pressure balanced type. Refer to the shower manufacturer for performance guidance and suitability.

Flushing and Water Treatment

The performance of the appliance could be impaired by system debris or the effects of corrosion. The system must be flushed thoroughly to remove metal filings, solder, machining oils and other fluxes and greases before connecting the boiler. If it is an existing system, an appropriate flushing and descaling agent should be used. Refer to BS 7593 (1992) for guidance. For more information on the use of corrosion inhibitors, flushing and descaling agents, advice can be sought from the manufacturers of water treatment products such as:

Betz Dearborn Ltd
Foundry Lane
Widnes
Cheshire
WA8 8UD
Tel: 0151 424 5351

Fernox Manufacturing
Britannica Works
Clavering
Essex
CB11 4QZ
Tel: 01799 550811

System Controls

The boiler is electrically controlled and is suitable for most modern electronic time and temperature controls. The addition of such external controls can be beneficial to the efficient operation of the system. The boiler connections for external controls are 24V and so only controls of 24V or that have voltage free contacts should be used.

By pass and Pump

The boiler is fitted with an automatic by pass. Although adjustment is not necessary.

Expansion Vessel

The expansion vessel is pre-charged to 0.7 bar (10 lb/in^2). The vessel is suitable for systems up to 145 litres capacity. For systems of greater capacity an additional expansion vessel will be required. Refer to the chart below and BS 7074 pt 1 or BS 5449.

Filling Point

Provision must be made to be able to charge the system on commissioning and to make up any subsequent pressure loss.
The method of connection must utilise approved equipment and must comply with the water regulations. A filling loop can be so installed as to be hidden beneath the boiler.

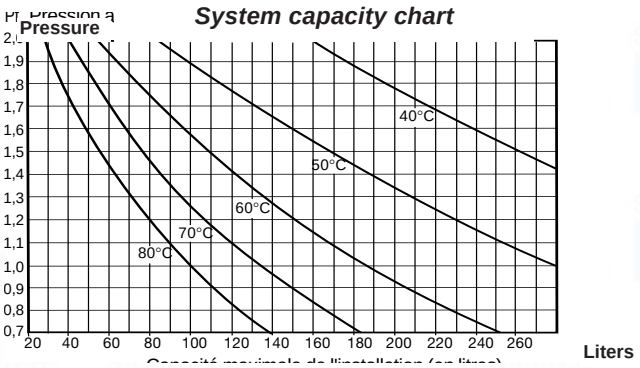

Fig. 21

10 User's Instructions

Control panel

19. Two position Selector switch
    O = Switched OFF
    I = Switched ON
20. = Domestic hot water temperature adjustment
21. = Heating flow temperature adjustment
22. Heating temperature indicator lights
23. Green indicator - Power ON
24. Orange indicator - Burner ON
25. Red indicator - Lock out / flame failure
26 "**RESET**" Reset button
27. Pressure gauge
28. =- DHW mode indicator
29. =- Heating mode indicator

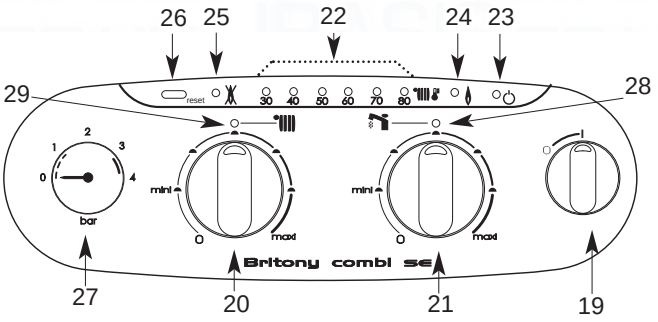

Fig. 22

Isolating Taps
(taps shown in Open position)

30. CH Flow isolating valve
31. Gas service tap
32. Water service tap
33. CH Return isolating valve

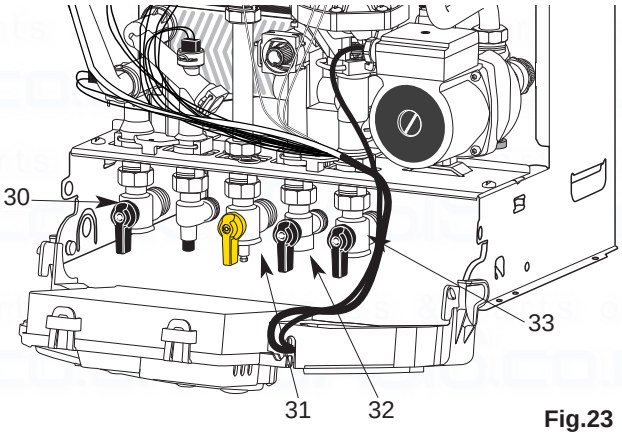

Fig.23

Switching on

1) Check that the gas service tap is opened at the gasmeter and main power is on.
2) Check that pressure in central heating system is above 0.7 bar and below 1.5 bar with the pressure gauge **27**.
3) Open the gas tap **31**.
4) The boiler is now ready to use.

Hot Water

1) Turn main switch **19** to position **I** . The green "power on" indicator **23** will light.
Turn the DHW thermostat clock wise **21**. The DHW indicator will light **28**.
2) Turn on a hot water tap, the orange "burner on" indicator will light **24** and the water will become hot.

Heating

1) Turn main switch **19** to on position **I** . The green "power on" indicator will light **23**.
Turn the CH thermostat clockwise **20**. The CH indicator will light **29**.
3) If the room thermostat (if fitted), the boiler temperature control and the clock (if fitted) are all calling for heat, the orange "burner on" indicator will light and the heating will be on.
When there is a need for hot water while the heating is on, it is only necessary to turn on a hot tap. The heating will be interrupted momentarily while the hot water is being delivered. The boiler will switch back automatically to heating when the tap is turned off.

Note: If the boiler has been turned off for some time the first attempt to light it may result in a lockout . If this happens press the reset button **25** and the boiler will light.

To Turn Boiler Off Completely

1) Turn the selector switch **19** to the off position **O**.
2) Turn the gas tap **31** OFF.

11 Instruction for Setting the Built in Clock (if fitted)

1. General layout

The mechanical clock covers a 24 hour period. Each tappet represents 15 minutes **A** (fig. 25). An override switch is located on the clock **B** (fig 25).

2. To set the time

To set the time of day, grasp the outer edge of the dial and turn slowly clockwise until the correct time is lined up with the arrow **C** (fig. 25).

3. To Set the "On" and "Off" times

The clock uses a 24hours system. e.g. 8 =8.00 am and 18 = 6.00 pm "ON" periods are set by sliding all tappets between the "ON" time and the "OFF" time to the outer edge of the dial.The tappets remaining at the centre of the dial are the "OFF" periods.

4. To select function mode

Put the selector switch **B** to symbol ⏲ to control the boiler by the clock. Put the switch **B** to «**I**» to select permanent operation or to «**0**» to turn heating off permanently.

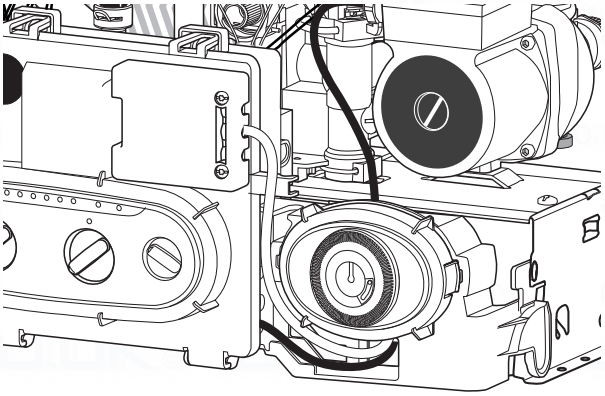

Fig. 24

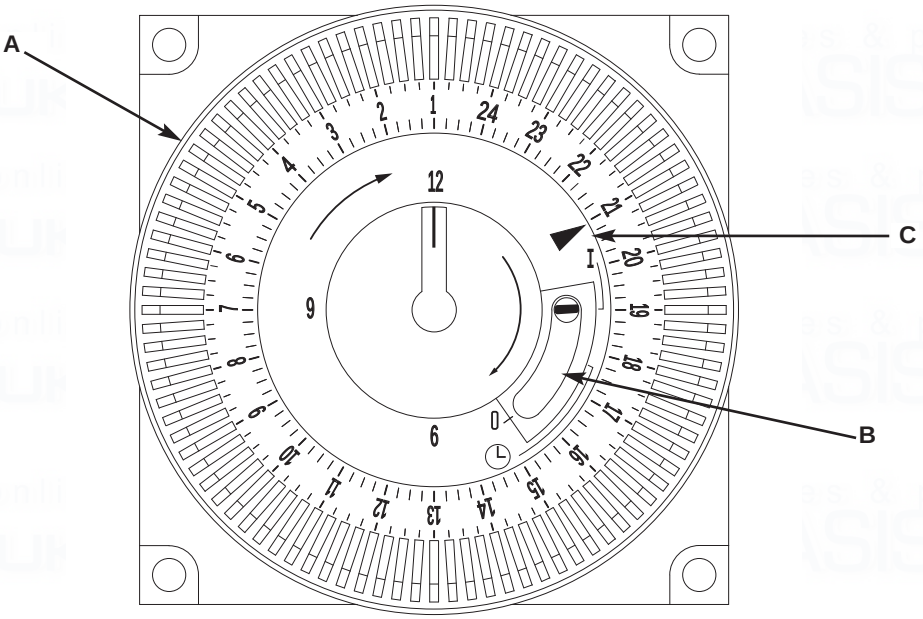

Fig. 25

12 Incorrect Function

Incorrects functions is signalled by leds (rep 22) display flashing correspond with chart below.

CODE						FAULT
30	40	50	60	70	80	
❍	❍	❍	❍	❍	●	Overheat sensor switch open.
❍	❍	❍	❍	●	❍	Overheating defect without lock out.
❍	❍	❍	❍	●	●	No flame detection.
❍	❍	❍	●	❍	❍	Ionisation printed circuit board faulty.
❍	❍	❍	●	❍	●	Antifrost mode on (pump in operation).
❍	❍	❍	●	●	❍	Antifrost mode on (burner and pump in operation).
❍	❍	●	❍	❍	●	Domestic hot water thermistor faulty (open circuit).
❍	❍	●	❍	●	❍	Domestic hot water thermistor faulty (short circuit).
❍	❍	●	❍	●	●	Central heating thermistor flow faulty (open circuit).
❍	❍	●	●	❍	❍	Central heating thermistor flow faulty (short circuit).
❍	●	❍	❍	❍	●	Low water pressure in the Central Heating circuit.
❍	●	❍	●	❍	●	Fan on but does not activate air pressure switch.
❍	●	❍	●	●	❍	Fan off but air pressure switch fails to return to off position.

Notes

This appliance is suitable for Natural gas or LPG. A gas conversion must be made by a competent person.

Chaffoteaux & Maury are continuously improving their products and therefore reserve the right to change specifications without prior notice and accepts no liability for any errors or omission in the information contained in this document.

Manufacturer: **Chaffoteaux & Maury - France**

Commercial subsidiary: **MTS (GB) Limited**
MTS Building
Hughenden Avenue
High Wycombe
Bucks HP13 5FT

Telephone: (01494) 755600
Fax: (01494) 459775
Internet: www.chaffoteaux.co.uk
E-mail: info@uk.mtsgroup.com

Technical Support Help Line: 0870 241 8180
Customer Service Help Desk: 0870 600 9888

13044151h - 12/2002