Celt Star

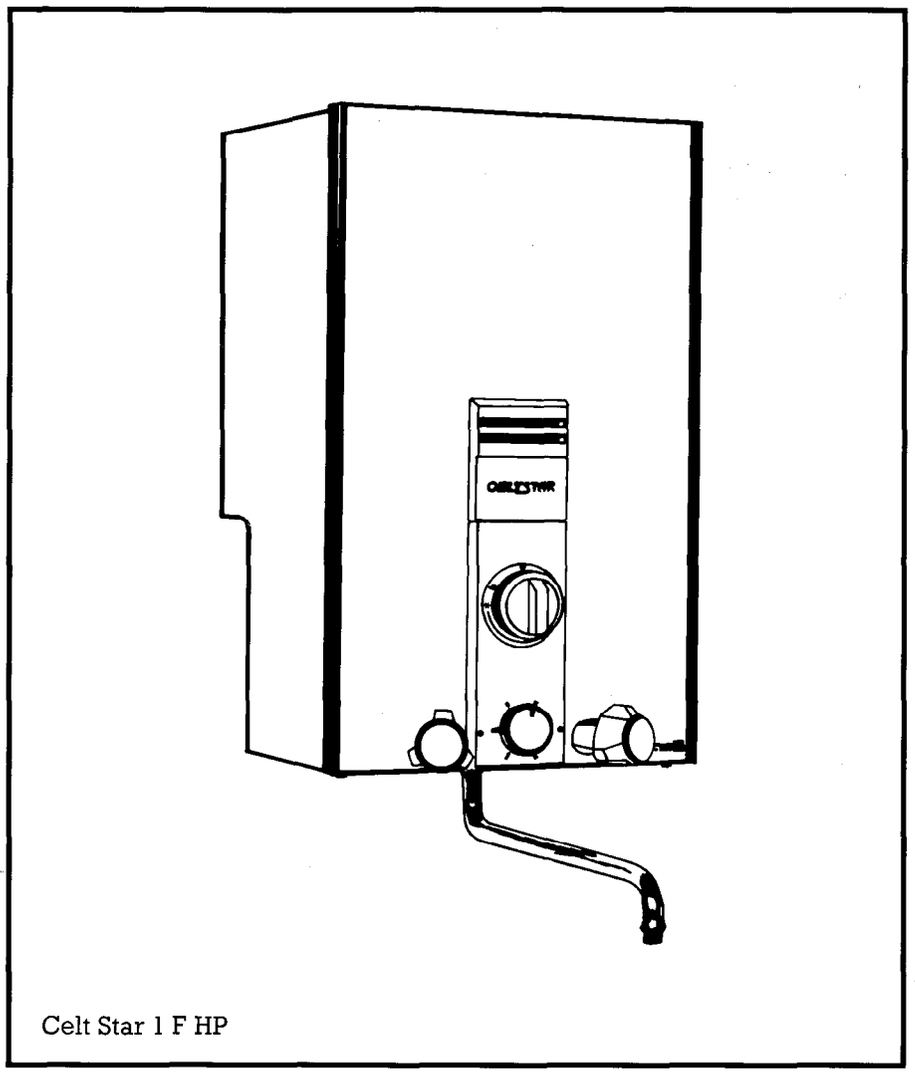

Celt Star 1 F HP

Model 1 F HP GC N° 51.980.29
1 F LP GC. N° 51.980.30
2 F HP GC. N° 51.980.31
2 F LP GC. N° 51.980.32

installation and servicing instructions

(leave these instructions with the User)

The model no. and serial no. of this heater are on the data badge which is found hanging at the rear left hand side beneath the appliance. These numbers should be used when ordering replacement parts.

Chaffoteaux
Looking Good. Heating Better

1.0 GENERAL

The CELT STAR is a gas fired instantaneous water heater.

It is designed to deliver hot water through a swivel spout or to a hot water tap at a sink or basin (1 F). A remote model is also available (2 F). A high pressure model is for use directly off the mains, a low pressure model is supplied for use off a tank supply.

The appliance features an atmosphere sensing device which will turn off the gas supply to the pilot and burner, when the oxygen in the atmosphere in the locality of the heater becomes diminished and is unable to support safe combustion. It also protects the user if the heat exchanger fins become blocked.

Also included in the appliance is a scale reducer.

Four models are available :

Spout model	High pressure	1F HP	GC N°. 51 980 29
Spout model	Low pressure	1F LP	GC N°. 51 980 30
Remote model	High pressure	2F HP	GC N°. 51 980 31
Remote model	Low pressure	2F LP	GC N°. 51 980 32

1.1 Guarantee - 12 months' from date of installation.

The guarantee on this appliance is void if it is not installed in accordance with the recommendations made herein or in a manner approved by the manufacturer.

Dimensions

Fig. 1

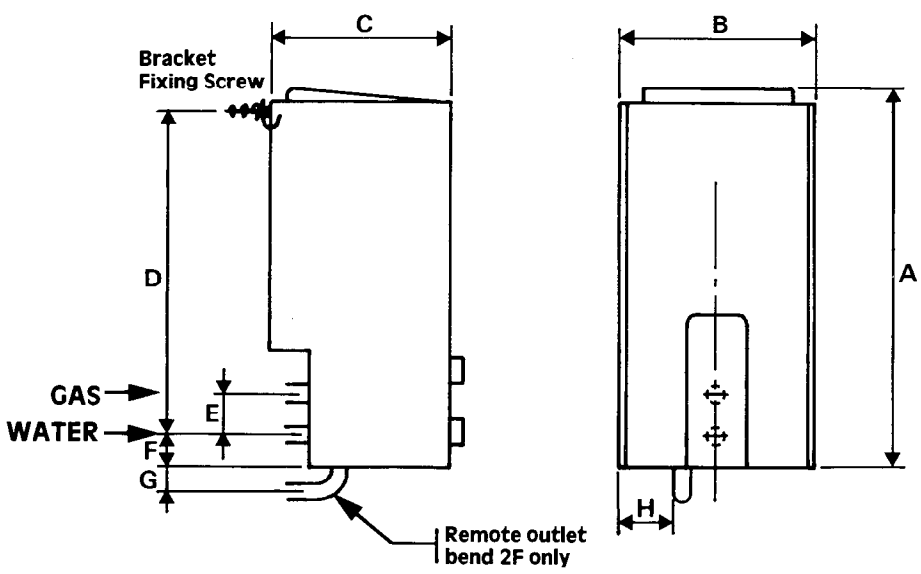

	mm	in
A	415	16 1/4
B	246	9 3/4
C	220	8 3/4
D	396	15 1/2
E	60	2 1/2
F	20	3/4
G	20	3/4
H	103	4 1/4

1.2 Technical Data

NATURAL GAS — **TABLE 1**

Heat input Nominal	11.6 kW	39,580 Btu/h
Heat output Nominal	8.7 kW	29,600 Btu/h
Gas rate (maximum)	1.095 m³/h	38,67 ft³/h
Burner pressure	5.1 mbar	2.0 in wg
Main burner injectors marking	1.28	
Pilot injector marking	26	
Restrictor	2.7 mm	
Water flow raised 50 °C (90 °F)	2.5 L/min	0.55 gpm
Water flow rate raised 25 °C (47 °F)	5.0 L/min	1.1 gpm
Minimum operating head for high pressure (HP) models	0.50 bar	7.25 psi
Maximum operating head for high pressure (HP) models	10.0 bar	145 psi
Minimum operating head for low pressure (LP) models	1.0 m	3.28 ft
Maximum operating head for low pressure (LP) models	25 m	82 ft

Note : The minimum water pressure is for the correct operation of the heater only. An additional allowance must be made for the resistance of the pipework and fittings.

1.3 Connections

Water inlet	15 mm copper	
Water outlet	Swivel Spout (1F model) and/or 15 mm copper remote (2F model)	
Gas	15 mm copper	
Weight	8.2 kg	18.1 lb

1.4 Minimum clearance required for installation and servicing :

Top	600 mm	24 in
Bottom	50 mm	2 in
Sides	75 mm	3 in
Front	250 mm	10 in

1.5 This appliance is for use on Natural gas and must not be used on any other Gas.

1F MODEL

This heater is designed for installation over the sink to deliver hot water either through a swivel spout or to a hot water tap at a sink or basin.

2F MODEL

The remote model is designed for direct connection to the tap. These heaters must NOT be connected to a bath hot water draw off.

2. INSTALLATION REQUIREMENTS

2.1 Related Documents

The installation of the heater must be in accordance with the relevant requirements of the Gas Safety (Installation and Use) Regulations, Building Regulations and the Bye-laws of the local Water Undertaking. It should be in accordance also with any relevant requirements of the local gas region and local authority, and the relevant recommendations of the following British Standard Codes of Practice :

CP 331 Installation of pipes and meters for town gas
Part 3 Low pressure installation pipes

BS 5546 Installation of gas hot water supplies for domestic purposes (second family gases)

BS 5440 Flues and air supply for gas appliances of rated input not exceeding 60 kW (1st and 2nd family gases)
Part 1 Flues
Part 2 Air Supply

2.3 Air Supply

Important : This heater should be used in a well ventilated room. An air vent direct to outside is required of not less than 35 cm² free area, plus an openable window in the room or internal space in which it is installed. These heaters must NOT be fitted in a space where the total volume is less than 6 m³.

This water heater is fitted with an atmospheric sensing device which will turn off the gas supply to the pilot and burner, when the oxygen in the atmosphere in the locality of the heater is diminished and will not support safe combustion. It also protects the user if the heat exchanger fins become blocked.

It is therefore important that the heater is not located over a cooker or in a position where the air supply is restricted or contaminated.

The location must also permit space for servicing and air circulation around the appliance.

2.4 Gas Supply

An adequate sized gas meter must be connected to the service pipe. Where necessary the local Gas Region will arrange for the existing meter to be checked or for a suitable meter to be installed. On no account must any work be carried out on the gas meter other than by the local Gas Region or their specifically authorised contractor.

Installation pipes should be fitted in accordance with CP,331:3. Pipework from the meter must be of adequate size. Pipes of a smaller size than the gas connection should be not used.

The complete installation must be tested for gas soundness and purged in accordance with CP,331:3.

In addition to any other gas appliance installed in the premises, the meter should be capable of passing : 40 cu, ft/h of natural gas.

2.5 Description of Operation of Special components

2.5.1 Atmosphere Sensitive Pilot

The primary air for the pilot is entrained via a tube from the combustion chamber. When the oxygen in the atmosphere in the locality of the heater becomes diminished and is unable to support safe combustion it causes the pilot to change shape. Under these conditions the thermocouple is in a cooler part of the flame the millivolt output is reduced causing the thermoelectric valve to drop out.

2.5.2 Scale Reducer

The scale reducer is a diaphragm vessel forming part of the water section. At the termination of a demand cycle the contents of the heat exchanger are displaced into the vessel.

2.6 Flue

These appliances are flueless. Protection is provided in the form of the atmosphere sensitive pilot (see Section 2.5.1.).

They must not be operated continuously for more than five minutes.

3.0 INSTALLING THE APPLIANCE

A vertical flat area of 1065 mm (42") × 396 mm (14 1/4") is required for the appliance.

If the heater is to be fitted to a wall likely to be affected by heat the wall MUST be protected by a sheet of incombustible materiel which will not reverberate.

When selecting a position for the appliance there must be a minimum clearance of 600 mm (24 in) between the top of the appliance and a ceiling.

3.1 Packaging — See Short List Diagram on page 20

The carton contains the following :

a) 1 × heater

b) 1 × set of knobs

c) 1 × set of fittings, consisting of :
- 3/8" nut, cap, blanking disc and washer,
- 3/8" nut and 15 mm bend for remote connection (2 F models only),
- 1/2" nut, gas service cock, metal/rubber washer, 15 mm bend for gas connection,
- 1/2" water service cock, 15 mm bend, 1/2" nut and fibre washer,
- 4 × HEX head screws for case fixing, mounting bracket,
- 2 × spire clips.
- 2" × No, 12 wood screw and metal washer.

d) 1 × pack containing front and side panels.

e) 1 × 10" (250 mm) spout and washer.

3.2 Preparing and fitting the appliance

a) Select a suitable position for the heater.

b) Using the dimensions in Section 1.2 mark the fixing position for the bracket.
Note : Check that the minimum clearances are maintained see 1.4

c) Drill and plug the wall and attach the fixing bracket using the screw and large metal washer provided.

d) Attach the gas and water connection fittings to the heater before hanging it on the wall bracket and connecting to the supplies.

3.3 Gas connection

Fig. 2

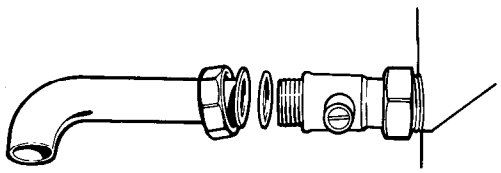

The heater is provided with a gas inlet bend suitable for connecting to 15 mm copper pipe and can be used with either capillary or compression fittings,

Ensure that the pipe is clean before connecting to the heater. A gas service cock is provided for fitting at the rear of the heater. Fasten the gas bend to the gas service cock using the metal/rubber washer.

Test the complete installation for gas soundness and purge (CP331;3).

3.4 Water connection

Fig. 3

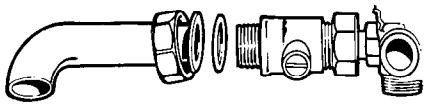

The water inlet is suitable for connection to a 15 mm copper supply pipe and can be used with either capillary or compression fittings. The low pressure model can be fed from a tank. The high pressure model must be connected to the mains supply.

The connection to the water section is made as shown. Use the fibre washer when connecting the copper bend to the water service cock (fig. 3).

1 F model : Fit the blanking cap to the remote outlet bend connection using the cap blanking disc and washer provided (fig. 4a).

2 F model : Fit the remote outlet bend using the fibre washer provided (fig. 4b).

The distance from the heater to the remote outlet should not exceed 20 feet.

Note : When using the 1 F model it is possible in addition to the spout to supply a remote outlet. A remote outlet bend is supplied and is fitted in place of the blanking disc (fig. 4) however permission from the local Water Authority must be obtained before connecting the HP models of the heater to the main supply.

Ensure that all water connections are fully tightened.

Test pipework for soundness.

Fig. 4a

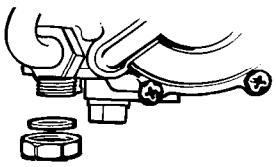

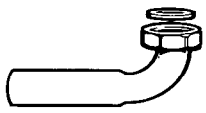

Fig. 4b

3.5 Spout (1 F model only)

Fit the spout to the base of the water section using the washer supplied.

4. COMMISSIONING

Open the gas and water service taps (see fig. 6a). Purge the gas and water supplies. Check for gas and water soundness.

Fit the gas and water control knobs and light the pilot by turning 90° anti-clockwise. It way be necessary to wait for the pilot to purge, if so, wait a few moments then turn to the 'off' position and repeat.

When the pilot is alight wait 10 seconds then turn the gas control fully anti-clockwise to the main gas position.

Turn on the hot tap, the heater will now light.

Check for gas soundness on appliance gas carrying components. Turn off the gas control knob.

Check the burner pressure by removing the screw from the pressure test point (A) (fig. 5) on the end of the burner manifold. Attach a suitable pressure gauge. Light the appliance and check the pressure. The correct pressure is given in table 1, page 2. If the pressure is not correct, check the pressure at the meter. The gas installation should be examined for any possible blockage if the pressure is not correct. The heat input is pre-set and non-adjustable.

Turn off at the gas control knob, remove pressure gauge, replace the test point screw, relight and check for gas soundness around the screw.

Remove screw on left hand side of combustion chamber to allow the data badge to suspend freely. Replace screw.

4.1 To fit casing (fig. 6)

a) Remove the control knobs.

b) Screw plastic spacer tube onto temperature selector spindle guide.

c) Hang the side panels from the top deflector plate ensuring they are engaged in the slots provided (A) (fig. 6).

d) Fasten the rear of each panel to the chassis at the bottom (B) (fig. 6) using the screws provided and spire clips provided (C).

e) Attach the front panel to the side panels in the same manner.

Replace the gas control knob, and water tap knobs. The temperature selector spindle should be screwed fully clockwise, the knob pushed on with the indicator at the + position.

Fig. 5

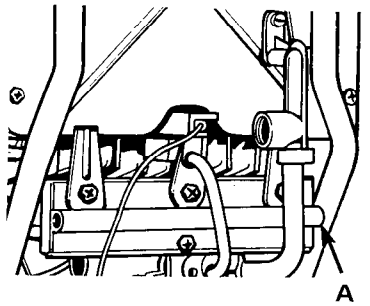

Fig. 6

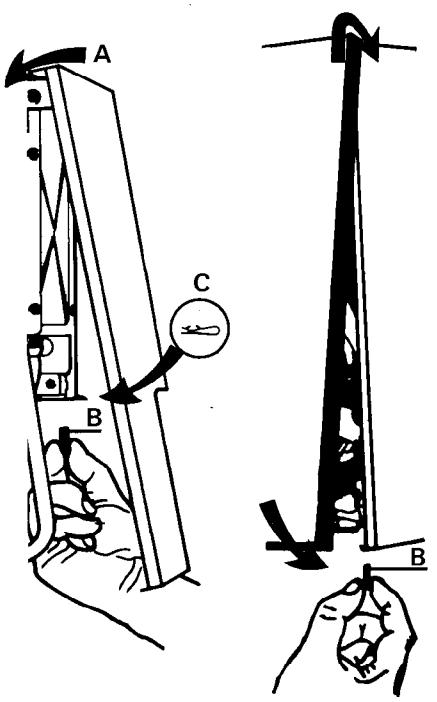

Fig. 6 a

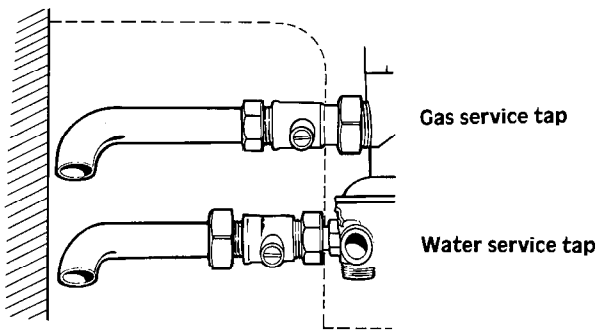

4.2 Flame failure device

Check the operation of the flame failure device :

a) By blowing out the pilot. The flow of gas to the pilot will cease and the thermoelectric valve should drop out with an audible click, within approx 30 seconds.

b) With the water running mask the top of the deflector using a large pan or similar metal plate (fig. 7a). The pilot and main gas should extinguish within 15 seconds.

4.3 To check the thermocouple (fig. 7)

Check with a BGC multimeter or suitable millivolt meter to determine the thermocouple output under two conditions :

a) When operating normally – output should be 14 mv or greater.

b) When the deflector is obscured the thermoelectric valve should close at 5,5 mv.

4.4 Handing over

Hand the Instructions for Use to the consumer and instruct in the correct and safe operation of the heater.

Explain to the user or purchaser that if the appliance is not used for long periods it is recommended that the appliance is drained. This is particularly important during the winter months (see servicing instructions for procedure to drain appliance).

Finally, advise the user or purchaser that, for continued efficient and safe operation of the appliance it is important that adequate servicing is carried out at regular intervals.

Fig. 7

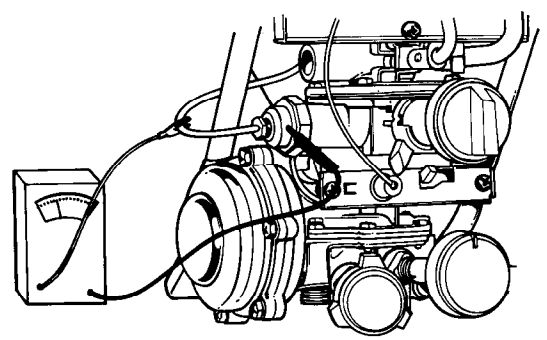

Fig. 7a

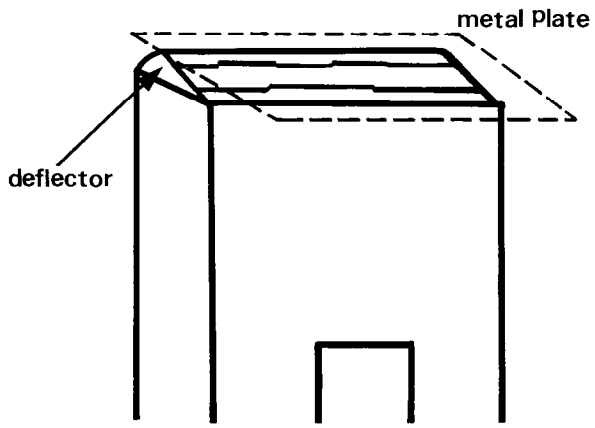

6. SERVICING INSTRUCTIONS

6.1 Heat input

It is a requirement of the Gas Safety (Installation and Use) Regulations 1984 that the burner pressure and gas rate are checked each time the appliance is serviced, likewise the service engineer should satisfy himself with regard to gas soundness and the adequacy of combustion and ventilation air if this is appropriate.

The heat input is pre-set and non-adjustable.

The heat input and burner pressure should be checked againts Table I.

If the heat input/burner pressure is not correct check the working pressure at the gas meter. The gas installation should be examined for any possible blockage if the pressures are incorrect.

6.2 Routine servicing

For efficient and trouble free operation it is important that the Celt Star receives annual maintenance. This routine service will normally be confined to :

a) Cleaning the burner.
b) Cleaning the heat exchanger fins.
c) Checking the gas controls.
d) Cleaning the pilot tube and sampling tube.
e) Cleaning the thermocouple and electrode.
f) Greasing the gas valve spindle.
g) Checking the heat input.
h) Checking the operation of the atmosphere sensing device.

The following schedules are recommended :

a) Before commencing any work turn off : **1)** the gas at the service cock,
2) the water at the water service cock by turning clockwise $^1/_4$ turn and check for gas leaks after reassembly.

b) Clean or replace components as necessary.
c) Check the function of the appliance and burner pressure after allowing it to warm up throughly.
d) Observe the flame picture. Check for flame lift or excessive yellow tips.

6.3 Cleaning

a) The burner can be cleaned by inverting and brushing with a soft brush. Inspect injectors, ensure they are clear.
b) Clean the pilot and sampling tube by blowing through.
c) The heat exchanger flueways can be cleaned by thoroughly brushing the finned surface. After brushing inspect to ensure that the flueways are completely clear.
d) The thermocouple can be wiped with a lint free cloth to remove any deposits. If the thermocouple tip appears burnt or cracked, exchange to avoid a possible break at a later date.
e) Electrode : examine and clean the tip, if the tip appears damaged replace electrode and lead assembly.
f) Replace all components in reverse order. The gasket between the gas section and the manifold must be correctly positioned upon reassembly.

6.4 To remove the casing

a) Pull off all the knobs.
b) Remove the screws in the base of the front panel and lift off panel.
c) Remove the screws at the bottom of the side panels and lift off panels.

6.5 Burner

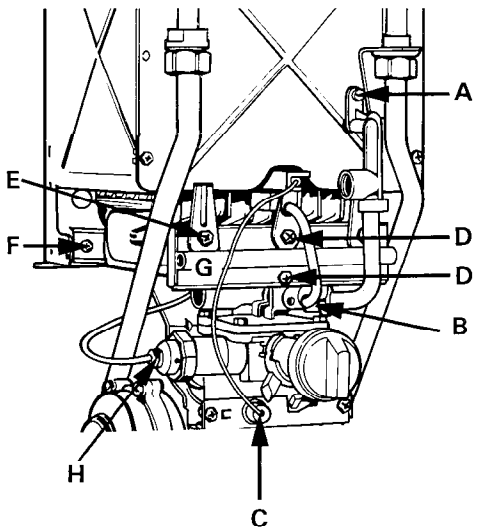

a) Remove the screw (A) which holds the atmosphere sampling tube onto the combustion chamber front cover. Ease tube out from the pilot head. Remove tube by pulling from top of gas section.

b) Slacken screw (B) at the base of the pilot tube where the pilot tube is joined onto the gas section. Remove tube by pulling forwards.

c) Remove the electrode lead from the piezo unit cartridge by pulling off (C).

d) Remove the two screws (D) and the two screws (E) securing the manifold.

Note : The pilot bracket is secured by the top centre screw (D) on the burner manifold (G).

e) Remove the manifold (G).

f) Remove the two screws (F) which secure the burner to the chassis.

g) Disconnect the thermocouple connection (H) at the gas control and manœuvre the pilot bracket outwards.

h) Lift the pilot bracket sufficient to withdraw the burner, taking care not to loose the manifold gasket.

i) Upon completion of servicing replace in reverse order making sure the gasket between the burner manifold and the gas section is in place and in good condition. If necessary replace the gasket.
Ensure that the burner head assembly is correctly located.

6.6 Pilot assembly

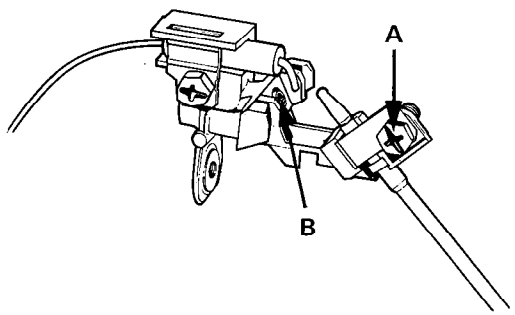

a) Withdraw the pilot bracket complete with the electrode and thermocouple.
The flame retention ring is situated in the pilot bracket.

b) Clean the retention ring (B) by brushing and blowing through from the bracket end of the head assembly.

c) Reassemble in reverse order ensuring that the pilot tube, thermocouple are correctly located. Do not fit to appliance at this stage.

6.7 Gas valve

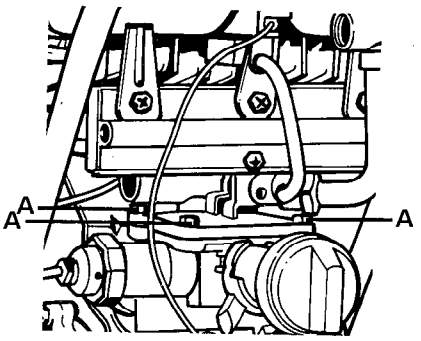

a) Remove the four screws (A) fastening the burner base to the gas section.

b) Remove the burner base and spring, lift out the gas valve.

c) Clean or replace the valve seating.

d) Replace in reverse order.

Note : The gasket should be inspected and replaced if necessary.

6.8 Heat exchanger

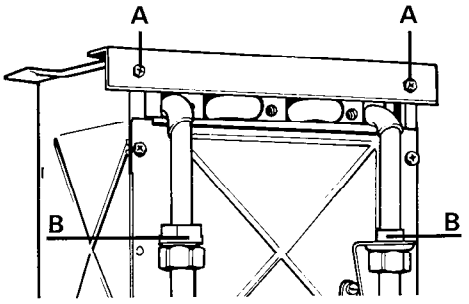

a) Remove the two screws (A) holding the deflector plate in position.

b) Remove the deflector plate by sliding forwards.

c) Disconnect unions at junction where heating body joins heating body legs (B).

d) Lift and slide heating body forwards.

e) Reassemble in reverse order.

6.9 Descaling procedure

Periodically it may be necessary to remove scale deposits from the waterways of the appliance to ensure continued and efficient operation. The frequency will depend largely on the hardness of the water.

Use a solution consisting of five parts water to one part hydrochloric acid. The water should preferably be hot, ADD ACID TO WATER, NOT WATER TO ACID.

Advice with regard to descaling is available from Chaffoteaux Ltd (Service Department).

6.10 Water governor

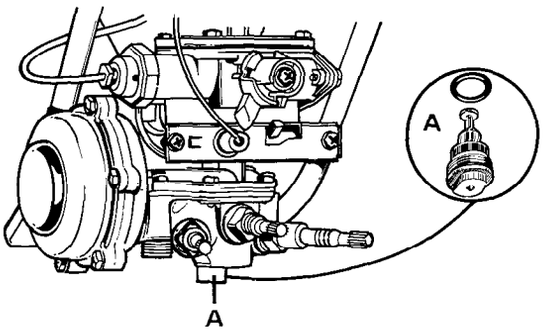

a) Remove the governor (A) which is situated in the base of the water section collecting the water in a receptacle.

b) Clean the components with water and regrease.

c) Check the spring loaded piston moves freely.

d) Replace in reverse order.

6.11 Greasing of components

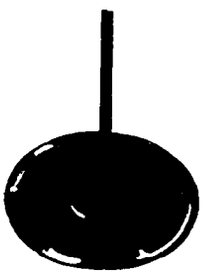

Care should be taken during the annual service of an appliance to grease the diaphragm spindle. Use either graphited or silicone grease.

a) Remove water section (six screws at base of gas section) for additional information (see Section 7.5).

b) Remove diaphragm.

c) Remove diaphragm spindle.

d) Replace in reverse order.

6.12 Replace burner (6.5) and outer casing

7. REPLACEMENT OF COMPONENTS

Before commencing any work involving component replacement :

a) Turn off the gas at the gas service cock.

b) Turn off the water at the water service cock.

c) Remove the case (see Section 6.3).

d) If procedure involves breaking water connections then drain the appliance by opening an outlet tap and removing the drain plug to the base of the water section.

7.1 Thermocouple

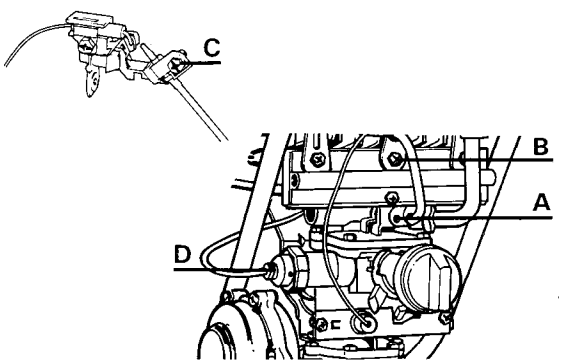

a) Disconnect from thermoelectric valve (D).

b) Remove pilot tube by loosening screw (A) and pulling forwards.

c) Remove screw (B) top centre of burner manifold and pull pilot assembly forwards.

d) Remove screw (C) securing thermocouple and retaining plate.

e) Replace in reverse order ensuring that the thermocouple is replaced in its purpose provided location.

7.2 Thermoelectric valve

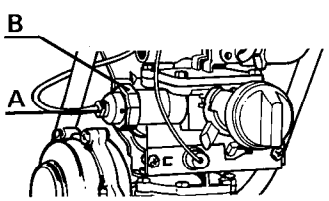

a) Disconnect thermocouple from thermoelectric valve (A).

b) Undo nut retaining the thermoelectric valve (B).

c) Lift out valve.

d) Replace in reverse order.

7.3 Spark electrode

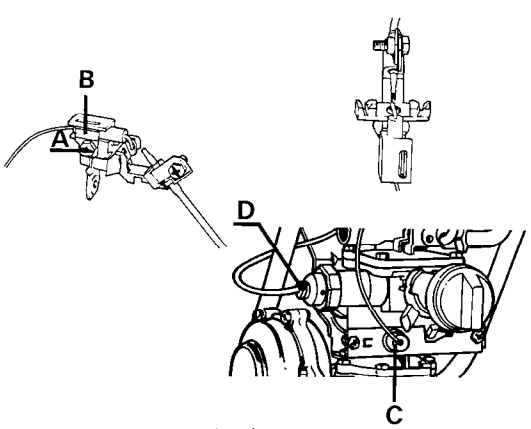

a) Disconnect thermocouple from thermoelectric valve (D).

b) Remove pilot tube by loosening screw (A - fig. 7.1) and pulling forwards.

c) Remove the electrode in the pilot bracket by undoing and removing the screw (A) and sliding the retaining plate (B) up from the bottom (screw end).

d) Disconnect lead from the piezo unit cartridge (C).

e) Replace in reverse order.
Note : The slot in the conductor at the end of the lead is vertical when pushed into the piezo unit cartridge.
Note : Spark gap is 5 mm.

f) In replacing the pilot bracket ensure that the two inside burners are correctly located into the bracket.

7.4 Venturi

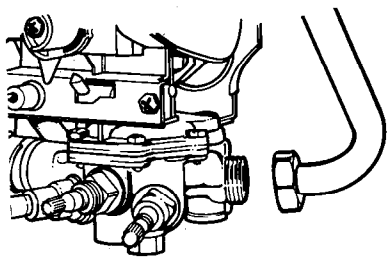

a) Remove the right hand heating body leg from the water section and remove the venturi by unscrewing. Clean or replace as necessery.

b) Reassemble in reverse order ensuring washers are in place.

7.5 Diaphragm

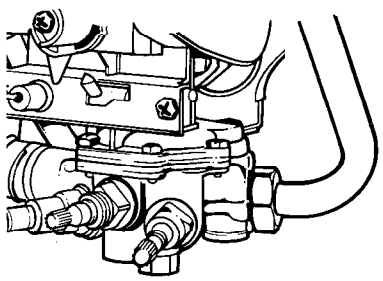

a) Disconnect from the water section the two water connections of the heating body and the water service tap.

b) Unscrew the six screws which hold the water section position to the gas section.

c) Remove the water section complete with diaphragm and the inlet water connection.

d) Carefully remove and inspect the plastic water section top cover and 'O' ring seal.

e) Remove and grease diaphragm spindle.

f) Reassemble in reverse order.

Note : Fit the governor last. It is easier if the cold water connection is partially engaged before fitting the screws and connecting the union nuts. Replace all washers.

7.6 Piezo unit cartridge

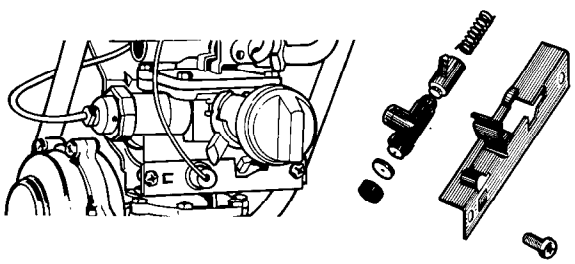

a) Disconnect the spark lead from the piezo unit cartridge

b) Remove the two screws (A) holding the retaining plate.

c) Remove the piezo cartridge and renew.

Note : On reassembling ensure that the locating pins on each end of the spring are correctly engaged in their location holes.

7.7 Tap washers

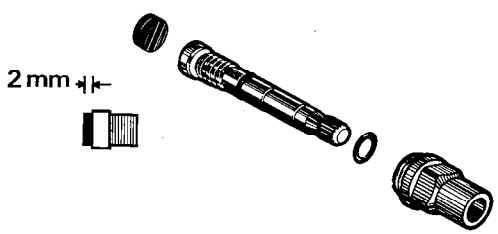

a) Unscrew tap spindle guide using a 14 mm spanner and remove.

b) Pull out the tap washer. The washer can be reversed but it should be ensured that there are 2 mm between the washer cup and the washer face.

c) Replace in reverse order.

7.8 Scale reducer

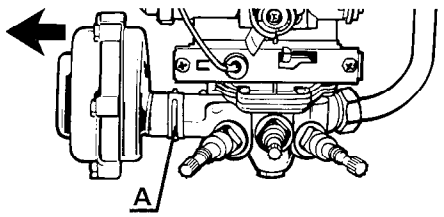

a) Remove the retaining spring clip (A) with pliers.

b) Pull out to the side.

c) Replace in reverse order.

Note : It will be easier to first engage the long leg of the retaining spring clip into the bottom hole then engage the top hole before pushing home.

7.9 Diaphragm in scale reducer

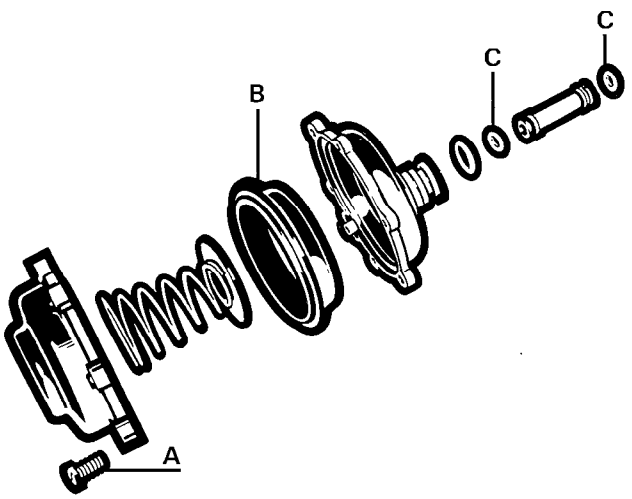

a) Remove scale reducer (see Section 7.8).

b) Remove six screws (A) which retain cover to bottom housing of scale reducer.

c) Lift out diaphragm (B).

d) Replace in reverse order.

Note 1 : When replacing the diaphragm care should be taken positioning the portion which seals the tube which connects the top and bottom sides of the water section.

Note 2 : Before replacing the scale reducer inspect the two 'O' rings (C) and grease if necessary.

Note 3 : It will be easier to first engage the long leg of the retaining spring clip into the bottom hole then engage the top hole before pushing home.

7.10 Combustion chamber lining

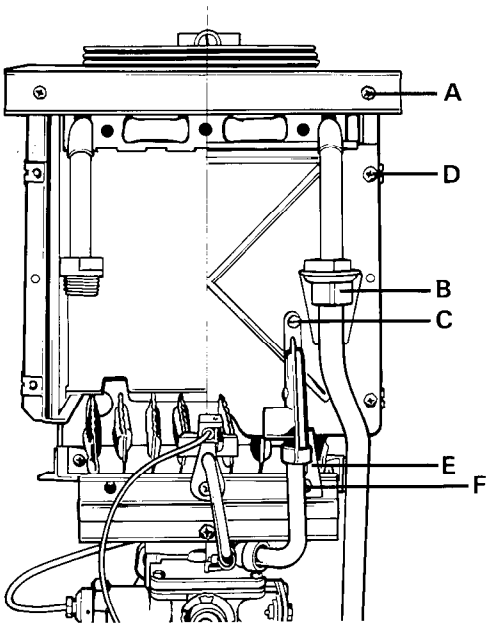

a) Remove two screws (A) holding the deflector plate in position.

b) Remove deflector plate by sliding forwards.

c) Disconnect unions at junction where heating body joins heating body legs (B).

d) Remove heating body by lifting and sliding forwards.

e) Undo nuts securing heating body legs to water section and remove legs.

f) Remove screw (C) which secures the atmosphere sampling tube onto the combustion chamber front cover.

g) Ease sample tube from the pilot head.

h) Remove brackets (E) which are retained by screws (F) onto burner manifold.

i) Remove the four screws (D) which retain the combustion chamber front cover.

j) Slide out combustion chamber side linings.

k) Remove the rear lining if necessary complete with support bracket, then slide out of plate.

l) Replace in reverse order.

7.11 Heat exchanger

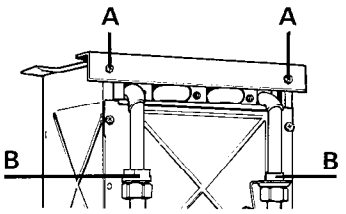

a) Remove the two screws (A) holding the deflector plate in position.

b) Remove the deflector plate by sliding forwards.

c) Disconnect unions at junction where heating body joins heating body legs (B).

d) Lift and slide heating body forwards.

e) Reassemble in reverse order.

7.12 Burner

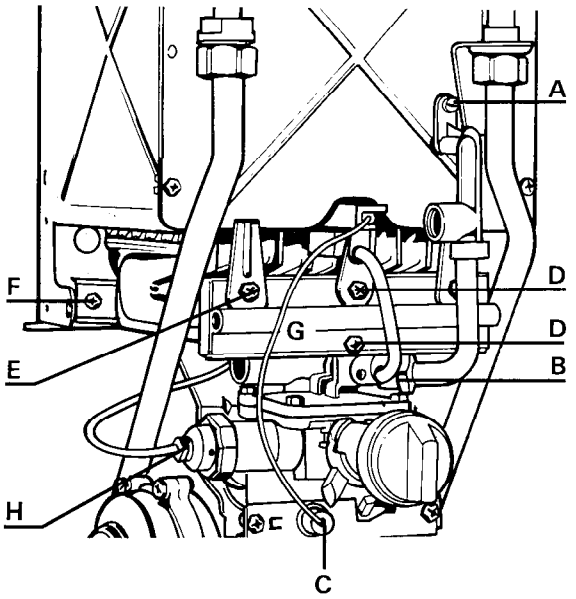

a) Remove the screw (A) which holds the atmosphere sampling tube onto the combustion chamber front cover. Ease tube out from the pilot head. Remove tube by pulling from top of gas section.

b) Slacken screw (B) at the base of the pilot tube where the pilot tube is joined onto the gas section. Remove tube by pulling forwards.

c) Remove the electrode lead from the piezo unit cartridge by pulling off (C).

d) Remove the two screws (D) and the two screws (E) securing the manifold.
Note : The pilot bracket is secured by the top centre screw (D) on the burner manifold (G).

e) Remove the manifold (G).

f) Remove the two screws (F) which secure the burner to the chassis.

g) Disconnect the thermocouple connection (H) at the gas control and manoeuvre the pilot bracket outwards.

h) Lift the pilot bracket sufficient to withdraw the burner, taking care not to loose the manifold gasket.

i) Replace in reverse order making sure the gasket between the burner manifold and the gas section is in place and in good condition. If necessary replace the gasket.
Ensure that the burner head assembly is correctly located.

7.13 Pilot assembly

a) See Section 7.1 – Removal of thermocouple.

b) Remove pilot tube by loosening screw (A) (fig. 7.1) and pulling.

c) Remove electrode (see Section 7.3 c).

d) Replace in reverse order.

7.14 Gas valve

a) Remove main burner (see Section 7.12).

b) Disconnect thermocouple.

c) Remove gas valve (see Section 6.7)

d) Replace in reverse order.

7.15 Water governor

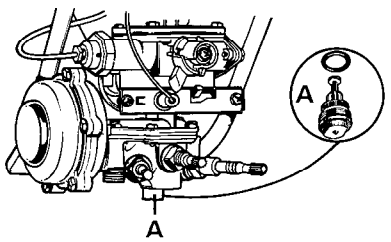

a) Remove the governor (A) which is situated in the base of the water section collecting the water in a receptacle.

b) Clean the components with water and regrease.

c) Check the spring loaded piston moves freely.

d) Replace in reverse order.

7.16 Burner manifold

a) Remove pilot tube by loosening screw (A) (fig. 7.1) and pulling.

b) Remove screws (E) and (D) (fig. 6.5) and remove injector manifold.

c) Replace in reverse order taking care that the manifold gasket is correctly positioned.

7.17 Atmosphere sensing device

The tube is replaced as follows :

a) Remove screw (A) (section 7.12) and pull off from casting.

b) Replace in reverse order.

8 FAULT FINDING CHART FOR CELT STAR

	PROBLEM	CAUSE	REMEDY
8.1	**Pilot flame does not light automatically**	i) Gas service cock closed ii) Air in pipe iii) Pilot injector blocked iv) Incorrect spark gap at electrode v) No spark vi) Pilot air tube obstructed	Open service cock Purge line Clean or change Reposition to 5 mm Replace electrode and lead at piezo cartridge Clean
8.2	**Poor pilot flame**	i) Pilot injector dirty/damaged ii) Wrong injector iii) Pilot head blocked iv) Faulty pilot tube v) Pilot air tube obstructed vi) Inadequate ventilation	Clean or change Change for correct diameter Clean Clean or replace Clean Remedy
8.3	**Pilot will not stay alight**	i) Thermocouple low output ii) Thermoelectric valve faulty iii) Gas pressure low/variable iv) Gas pressure too high v) Pilot flame incorrect vi) Inadequate ventilation vii) Loose connection thermocouple/ thermoelectric valve viii) Heat exchanger fins blocked ix) Pilot air tube obstructed	Change thermocouple Change valve Check at meter Check pressure at meter Check injector and pilot air tube for obstruction Remedy Tighten Clean Clean
8.4.1	**Main burner does not light**	i) Gas service tap not open fully ii) Water rate low iii) Gas valve push rod jammed iv) Diaphragm perforated v) Gas control tap faulty vi) Injector size vii) Diaphragm scale reducer damaged	Open fully Check if water rate is sufficient (see page 2) Clean rod and regrease Change diaphragm Check operation of User's gas control tap Check burner injectors against Table 1 Replace
8.4.2	**Explosive ignition**	i) Pilot ii) Center burners misplaced	Check length is 7 mm and clean injector if necessary Relocate into slots in pilot bracket.

8 FAULT FINDING CHART FOR CELT STAR

	PROBLEM	CAUSE	REMEDY
8.5	**Water temperature low**	i) Wate flow rate too high ii) Insufficient gas flow iii) Water governor sticking iv) Heat exchanger blocked or scaled v) Diaphragm scale reducer damaged	Check governor Check gas rate and that the gas service cock and user's control are open Remove and clean or replace Descale or replace Replace
8.6	**Burner stays on**	i) Air in draw off ii) Gas valve push rod jammed iii) Gas valve "letting by" iv) Loose jumper on house stop cock v) Dead leg on system vi) Dirt in water section	Purge line to eliminate dead leg Clean push rod and grease Change valve facing Replace water stop cock or pin down jumper Vent or remove Clean water section
8.7	**Unstable flames**	i) Water in gas line ii) Inlet pressure too high for governor	Drain and purge Check pressure at meter
8.8	**Heating body noise**	i) Scale ii) Overgassed	Descale heating body Check burner and meter pressures
8.9	**Insufficient water flow**	i) Water service tap partly closed ii) Low water pressure iii) Water governor faulty iv) Water governor sticking v) Foreign matter in water section	Check it is fully opened Check water pressure (Table 1) Change governor Remove and clean or replace Remove and clean
8.10	**Heater smells when new**	i) Appliance newness	Smell will go within a short period of time
8.11	**High water flow**	i) Water governor sticking	Replace or grease

short list

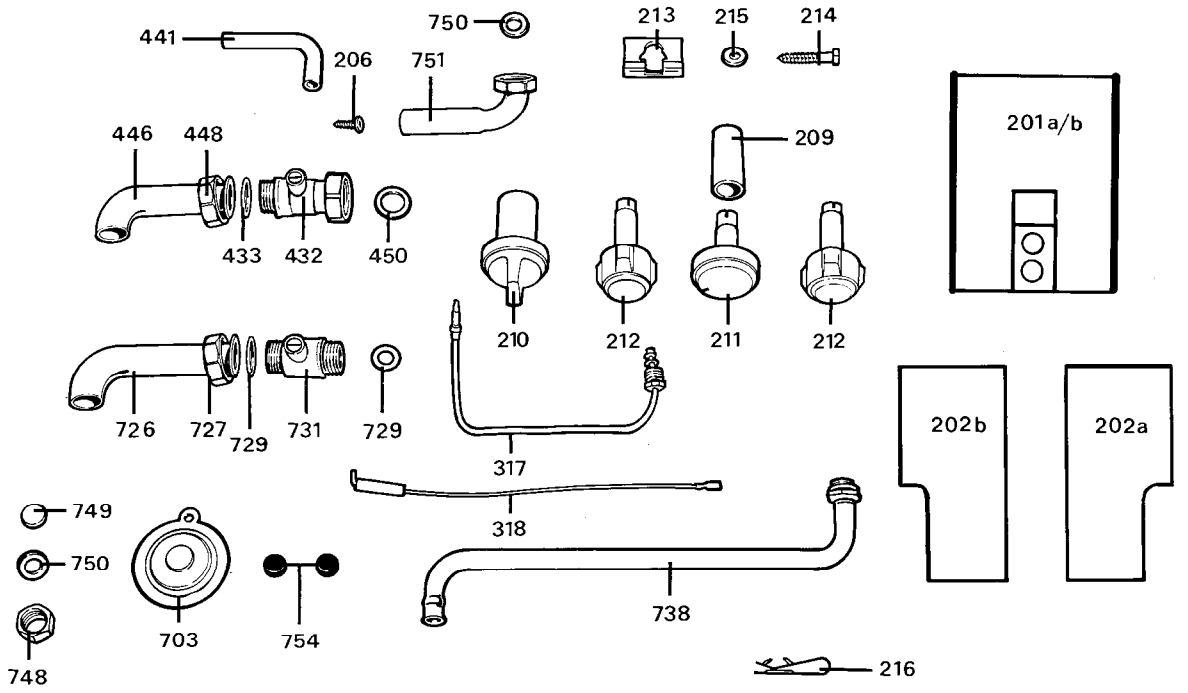

Key No	Description	NO. OFF	GC number	Maker's part number
201a	Front case 1 F	1	264 680	79028
201b	Front case 2 F	1	264 681	79027
202a	Right hand side panel	1	264 682	74396/06
202b	Left hand side panel	1	264 683	74397/06
203	Vertical trim	2	264 684	74909
206	Case fixing screws	4	366 716	66206
209	Temperature selector guide	1	264 688	70493
210	Gas control knob	1	264 689	74521
211a	Temperature selector knob (HP model)	1	264 690	74811
212	Hot and cold tap knobs (1 F)	1	264 692	74810
213	Fixing bracket - Wall mounting plate	1	264 693	54606
214	Wood screw	1	366 107	25617/03
215	Washer	1	264 694	35378/03
216	Spire clip for side panel	2	264 782	72411
317	Thermocouple	1	264 701	74432
318	Electrode and lead	1	264 702	75229
432	Gas service cock	1	264 725	74427
433	Washer between gas service cock and inlet pipe	1	366 016	22835/16
441	Air sample tube lower part	1	264 729	70628
446	Gas tube	1	264 733	76058/18
448	Nut - Gas tube	1	262 744	20747/38
703	Diaphragm	1	263 432	25809/30
726	Water tail	1	264 754	78864/08
727	Nut	1	262 744	20747/38
729	Washer	1	262 509	61855/14
731	Water service cock	1	264 756	74425
738	Spout	1	262 928	22527/10
748	Nut	1	263 669	20476/20
749	Blanking disc	1	262 503	1219
750	Washer	1	263 668	61854/10
751	Remote outlet bend	1	263 655	39783
754	Tap washers	2	263 375	5579

32 D - Imp. C.M. - Réf. 91120-122 - 01/88

Chaffoteaux

Chaffoteaux Ltd, Concord House, Brighton Road, Salfords, Redhill, Surrey RH1 5DX. Telephone : Horley (0293) 772744. Telex : 87378.
Warrington (0925) 830052.