MINIMA MX2

COMBINATION BOILER

Heating and Instantaneous Domestic Hot Water
Fanned Flue system

Installation, Operating and Servicing Instructions

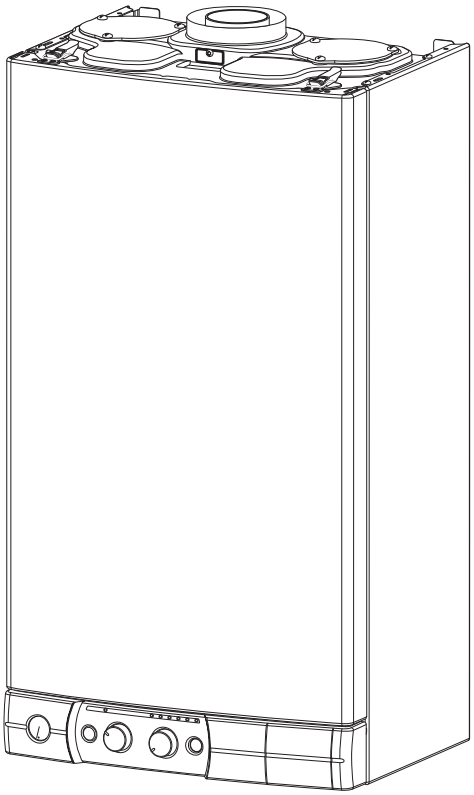

Manufactures N°	Model Type	Gas Council N°
200906827037.31	MX2 24 FF NG	47 - 980 - 28
200906828037.31	MX2 30 FF NG	47 - 980 - 29

GB IE

benchmark
The code of practice for the installation, commissioning & servicing of central heating systems

CE

C

These instructions are suitable for the Minima MX2 boilers :

Do not forget the Log Book!

Chaffoteaux & Maury supports Benchmark, the heating industry code to ensure the correct installation, commissioning and servicing of domestic central heating systems.

To The Householder

Make sure you have a completed Log Book for your boiler. This provides a record of the commissioning of your boiler.

It contains important information about your particular installation that may be required by service engineers. The Log Book will also provide contact details for the installer should you need guidance in the use of this appliance or if there are any problems.

As with your car, your boiler will work more reliably and efficiently if regularly serviced. We recommend an annual service check. The service history of the appliance will be recorded on the Log Book.

In the unlikely event of any problems with your boiler or system you should first contact your installer. If your installer cannot resolve the problem he should telephone our national service helpline.

A charge may be made if Chaffoteaux & Maury Service is called out to resolve a non-product related fault.

Your statutory rights are not affected.

To The Installer

As part of the commissioning of this appliance it is vital that the Log Book is completed and given to the Householder. Please ensure that your customer is aware of the importance of keeping the Log Book safe as a record of the installation and the appliance service history.

Please ensure that your customer is aware of the correct operation of the system, boiler and controls.

CUSTOMER CARE

Chaffoteaux & Maury, as a leading manufacturer of domestic and commercial water heating appliances is committed to providing high quality products and a high quality after sales service. If it is necessary to contact an engineer, then telephone the national warranty helpline 01494 539579.

Advice on installation or servicing can also be obtained by contacting the Chaffoteaux Customer Services Department at High Wycombe.

CUSTOMER SERVICES DEPARTMENT

Tel: 01494 539579

Fax: 01494 459775

GUARANTEE

The manufacturer's guarantee is for 12 months from the date of purchase. The guarantee is invalidated if the appliance is not installed in accordance with the recommendations made herein or in a manner not approved by the manufacturer. To assist us in providing you with an efficient after sales service, please return the guarantee registration card enclosed with the boiler without delay.

CAUTION

In the United Kingdom, installation, start-up, adjustments and maintenance, must be performed by a competent person only, in accordance with the current Gas Safety (Installation & Use) Regulations and the instructions provided.

In the Republic of Ireland, the installation and initial start up of the appliance must be carried out by a Competent Person in accordance with the current edition of I.S.813 "Domestic Gas Installations", the current Buidling Regulations, reference should also be made to the current ETCI rules for electrical installation.

All CORGI registered installers carry a CORGI ID card, and have a registration number. Both should be recorded in your boiler Log Book. You can check your installer is CORGI registered by calling CORGI direct on:- (01256) 372300.

Improper installation may cause damage or injury to individuals, animals and personal property for which the manufacturer will not be held liable. To ensure efficient and safe operation it is recommended that the boiler is serviced annually by a competent person.

If it is known that a fault exists on the appliance, it must not be used until the fault has been corrected by a competent person.

This instruction booklet is especially designed for appliances installed in the UK and the Republic of Ireland

Table of Contents

		PAGE
	CUSTOMER CARE	
	Guarantee	2
	Statutory Requirements	2
	Table of Contents	3
	USER'S INSTRUCTIONS	
1	**CONTROL PANEL**	5
2	**HOW TO USE**	6
3	**MAINTENANCE**	7
4	**FLUE GAS SAFETY**	7
5	**GUARANTEE**	7
6	**PRACTICAL INFORMATION**	7
7	**INSTRUCTIONS FOR SETTING THE BUILT IN CLOCK**	8
	INSTALLER'S INSTRUCTION	9
8	**DESCRIPTION**	9
9	**DIMENSIONS**	10
10	**HYDRAULIC DATA**	10
11	**INSTALLATION REQUIREMENTS**	11
	Reference Standards	11
	Codes of Practice	11
	Flue	11
	Gas Supply	11
	Electrical Supply	12
	Showers	12
	Flushing and Water Treatment	12
	System Controls	12
	Location	12
12	**CONNECTING THE FLUE**	13
12.1	Fitting the coaxial flue (Ø60/100 Horizontal)	13
12.2	Fitting the coaxial telescopic flue (Ø60/100 Horizontal)	14
12.3	Fitting the coaxial flue (Ø60/100 Vertical)	15
12.4	Fitting the 5" flue (Ø80/125)	17
12.5	Fitting the twin pipe (Ø80/80)	18
13	**INSTALLING THE BOILER**	22
14	**ELECTRICAL CONNECTIONS**	23
15	**OPERATING**	25
	Pressurising	25
	Settings	25
	Burner gas output setting	26
16	**FITTING THE CASING**	27
17	**COMPLETION**	28
18	**OPERATIONAL CHECKS**	28
19	**INSTRUCTING THE END USER**	28
20	**SETTING THE GAS PRESSURES / GAS TYPE CONVERSION**	29
21	**PARTICULAR CHARACTERISTICS**	30

SERVICING INSTRUCTIONS

22	Replacement of Parts	31
22.1	To Gain General Access	31
22.1.1	Removing the front panel	31
22.1.2	Removing the side panels	31
22.1.3	Removing the control panel door	31
22.2	Access to the Combustion Chamber	32
22.2.1	Remove the combustion chamber front panel	32
22.2.2	Removing the burner manifold	32
22.2.3	Removing the electrodes	33
22.2.4	Removing the burner	33
22.2.5	Removing the main heat exchanger	34
22.2.6	Removing the air pressure switch	35
22.2.7	Removing the fan	35
22.3	Servicing and Removal of the Gas Valve	36
22.3.1	Removing the spark generator	36
22.3.2	Removing the gas valve	36
22.4	Access to the Water Circuit	37
22.4.1	Drain down	37
22.4.2	Removing the 3 way valve	37
22.4.3	Removing the float of the flow switch	37
22.4.4	Removing the pressure relief valve	38
22.4.5	Removing the secondary heat exchanger	38
22.4.6	Removing the pump	38
22.4.7	Removing the expansion vessel	39
22.4.8	Removing the overheat thermostat	39
22.4.9	Removing the heating temperature sensor (ntc)	39
22.5	Access to the Control System	40
22.5.1	Removing the P.C.B's	40
22.5.2	Removing the fuses	40
23	**INCORRECT OPERATION**	41
24	**FAULT FINDING**	42
25	**ELECTRICAL DIAGRAMS**	45
26	**SHORT SPARES LIST**	46
27	**TECHNICAL DATA**	48

spares & parts online IBASIS.co.uk

1 Control Panel

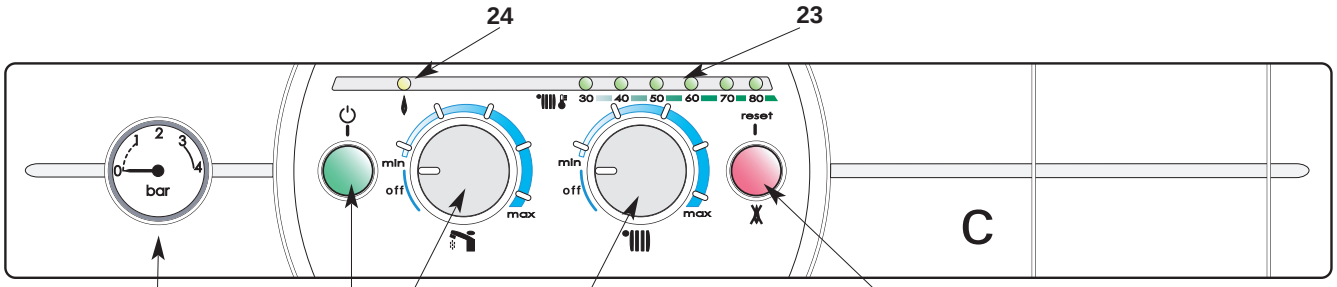

Fig. 1

Control panel (**Fig. 1**)

19. - Pressure gauge

20. - On/off push button and power on indicator light

21.- DHW water temperature setting and start button

22.- Central heating temperature setting and start button

23.- Heating temperature indicator and diagnostic indicator

24.- Orange indicator - Burner ON

25.- Reset push button and red indicator lockout light

Connecting bracket Taps shown in Open position (**Fig. 2**)

31 : Central heating flow isolating valve

32 : Domestic hot water outlet

33 : Gas service tap

34 : Cold water service tap

35 : Central heating return isolating valve

16 : Central heating pressure relief valve

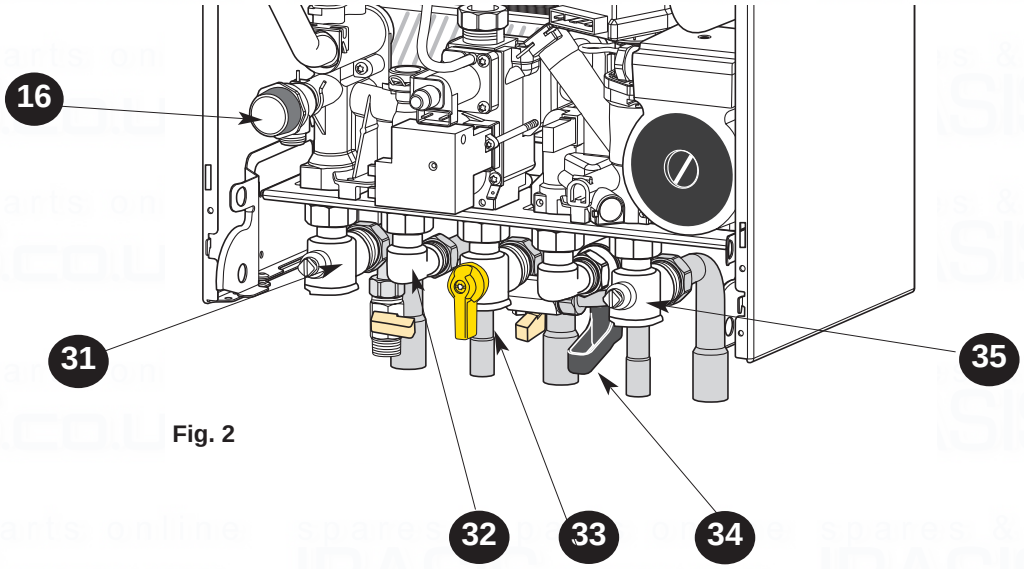

Fig. 2

2 How to Use

Starting up (**Fig. 2**)

1. Ensure that the mains gas supply isolating tap is open and that the appliance is supplied with power.
2. Ensure that there is sufficient pressure in the heating circuit: the pressure gauge needle should be at a minimum of 1.2 bar and a maximum of 1.7 bar when cold.
3. Ensure that the appliances gas inlet tap is open **33** (Fig. 2).

Your appliance is now ready to operate.

IMPORTANT!!

When the appliance is operated after a prolonged period of inactivity, the presence of air in the gas supply may hinder the first attempts at igniting the gas, to correct this see Section 23 "**Incorrect Operation**".

To obtain hot water and central heating :

To obtain hot water and central heating;

Press the On/Off button **20**; it lights up green when power is supplied;

- turn the hot water temperature control knob **21** to allow water heating ignition when water is being drawn. This knob allows you to adjust the hot water temperature. While hot water is being drawn, LEDs **23** light up two by two, displaying the temperature of the water within the boiler,
- turn the central heating temperature control knob **22** to allow heating ignition. This button enables you to adjust the water temperature in the central heating circuit according to seasonal requirements. LEDs **23** will display the temperature of the water within the boilers primary circuit.
  - Turn the control knob **22** :
    - to Max in cold weather
    - to Min in mild weather (by turning the knob too far, the Central Heating will swtich off)

Furthermore, if your home is fitted with a room thermostat, set it to the desired indoor temperature.

- the orange indicator light **24** lights up each time the burner operates

Stopping the central heating

- turn the central heating control knob **22** to the «**off** » position (fully anti-clockwise). The boiler then produces only hot water.

Stand-by mode

- turn the control knobs **21** and **22** to the «**off** »position (fully anti-clockwise), button **20** (Fig. 1) remains lit. The appliance remains in stand-by mode unless the anti-frost device is activated.

Turn off the appliance*

- press button **20** , the indicator light turns off
- turn off the electricity supply to the water heater.

***NOTE: IN THIS STATE THE APPLIANCES ANTI-FROST DEVICE IS INACTIVE**

NOTE:

In some circumstances, it is possible that the pipes (and possibly a radiator) heat up slightly after hot water is drawn. To prevent this, simply close the central heating flow tap **31** (*Fig. 2).*
Remember to re-open it at the start of the heating season, when you switch the heating back on by rotating button **22** *(Fig. 1) or by turning the clock on.*

3 Maintenance

Your boiler will work more reliably and efficiently if regularly serviced. We recommend an annual service check. The service history of the appliance will be marked on the Log Book.

4 Flue Gas Safety

The boiler is fitted with a safety system which authorises operation of the burner. If this device does not detect movement in the flue the boiler will shut down for safety reasons, and indicators 40, 60 and 80 flash **23 (Fig. 1**).

IMPORTANT: this flue gas checking device must not be removed, or have untimely work carried out on it. If it needs to be replaced, only original parts may be used.

5 Guarantee

The manufacturer`s guarantee is for 12 months from the date of purchase. The guarantee is voidable if the appliance is not installed in accordance with the recommendations made herein or in a manner not approved by the manufacturer. To assist us in providing you with an efficient after sales service, please return the guarantee registration card enclosed with the boiler without delay.

6 Practical Information

Pump anti-sticking device
With the boiler switched on (indicator light **20** lit), the circulation pump operates for 1 minute after the appliance has been out of operation for more than 23 hours, to prevent the pump jamming.

Precautions to take in freezing conditions
We recommend that you contact your installer or After-Sales service, who will advise you of the measures to take according to your circumstances.

Heating circuit
Take one of the following steps:
- 1) drain the circuit of the heating appliance
- 2) protect the heating appliance with an anti-freeze product.
- 3) allow your appliance to run at low load by setting the room thermostat to a low temperature (between 5 and 10°C).
- 4) leave the power to the boiler on. It is fitted with an anti-freeze device which activates the circulation pump, then the burner.

- Alternatively the appliances central heating and hot water circuit can be drained. Please consult your installer or local service agent.

7 Instruction For Setting the Built-in Clock (If Fitted)

1. General layout

The mechanical clock covers a 24 hour period. Each tappet represents 15 minutes **A** (Fig. 4). An override switch is located on the clock **B** (Fig 4).

2. To set the time

To set the time of day, grasp the outer edge of the dial and turn slowly clockwise until the correct time is lined up with the arrow **C** (Fig. 4).

3. To Set the "On" and "Off" times

The clock uses a 24hours system. e.g. 8 = 8.00 am and 18 = 6.00 pm "ON" periods are set by sliding all tappets between the "ON" time and the "OFF" time to the outer edge of the dial.The tappets remaining at the centre of the dial are the "OFF" periods.

4. For operation

Put the selector switch **B** to the ◷ symbol to control the central heating by the clock. Put the switch **B** to «**I**» to select permanent operation or to «**0**» to turn the central heating off permanently.

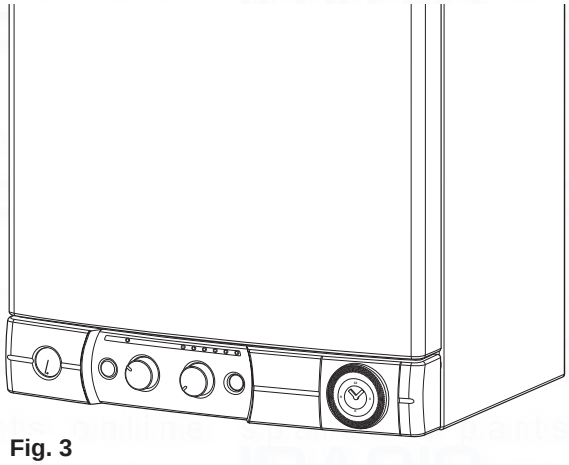

Fig. 3

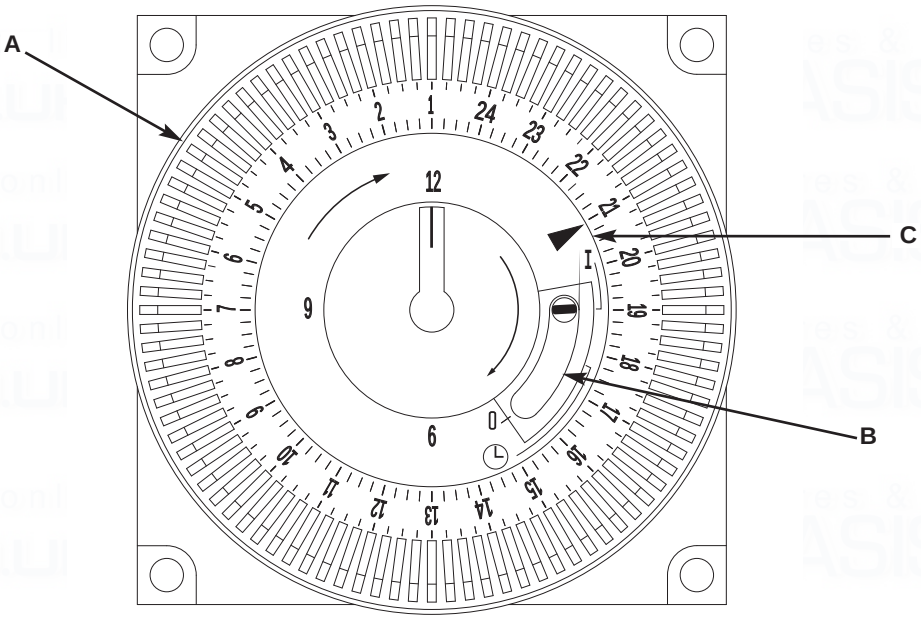

Fig. 4

8 Description

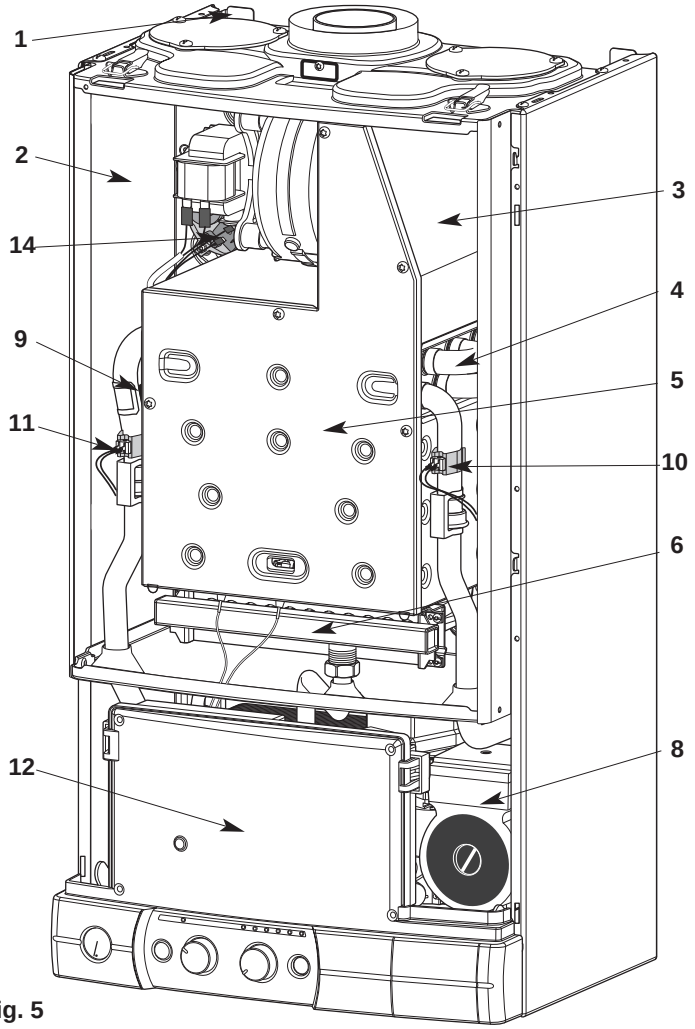

Fig. 5

1.- Steel chassis complete with expansion vessel
2.- Sealed chamber
3.- Flue hood with fan
4.- Main heat exchanger
5.- Combustion chamber
6.- Multi-gas burner assembly comprising ignition and ionisation electrodes
7.- Gas valve assembly
8.- Pump with automatic air separator and automatic vent
9.- Overheat safety cut-out
10 - Return thermistor
11.- Flow thermistor
12.- Electrical box
13.- Hot water flow sensor
14.- Air pressure switch
15.- Ignitor
16.- Central heating pressure relief valve
17.- Three way valve
18.- Secondary heat exchanger
19. - Pressure gauge
20. - On/off push button and power on indicator light
21.- DHW temperature setting and start button
22.- Central heating temperature setting and start button
23.- Heating temperature indicator and fault diagnostic indicator
24.- Orange indicator - Burner ON
25.- Reset push button and red indicator lock-out light

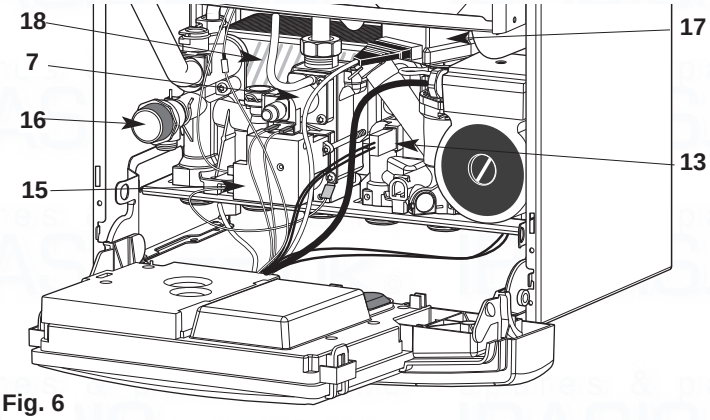

Fig. 6

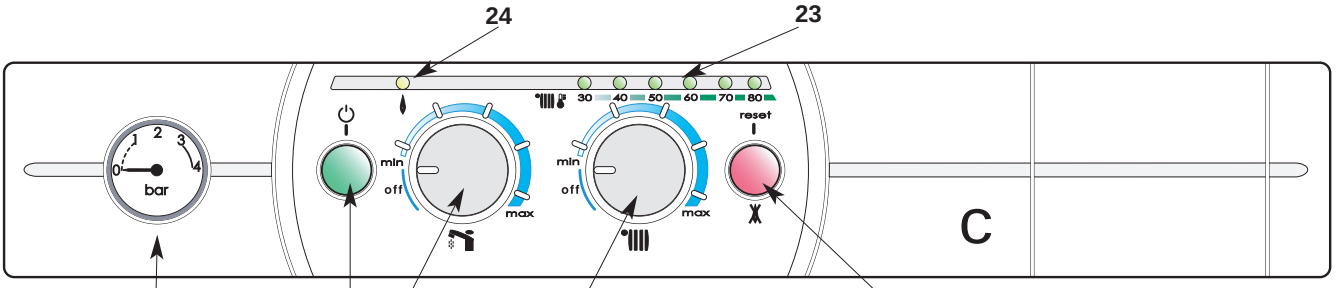

Fig.7

9 Dimensions

All dimensions in mm

I	Safety valve C/H
J	Heating flow
K	D.H.W. flow
L	Gas supply
M	Cold water inlet
N	Heating return

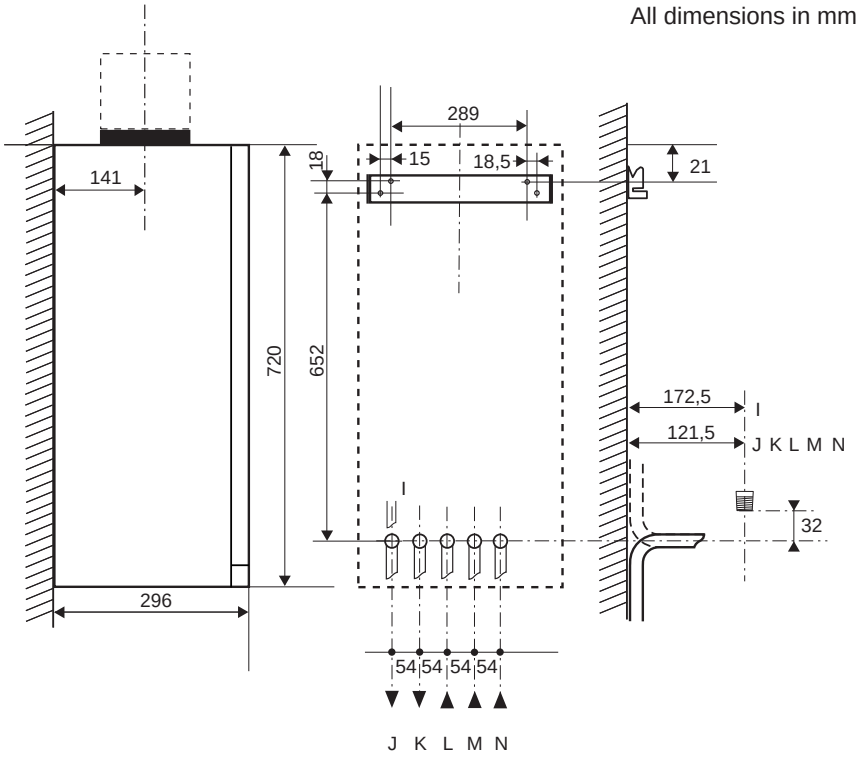

Fig. 8

With packaging :
24 kW : 32 kg
30 kW : 33 kg

minimum space required 450mm

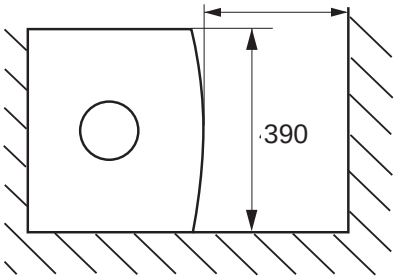

10 Hydraulic Data

Pump head available

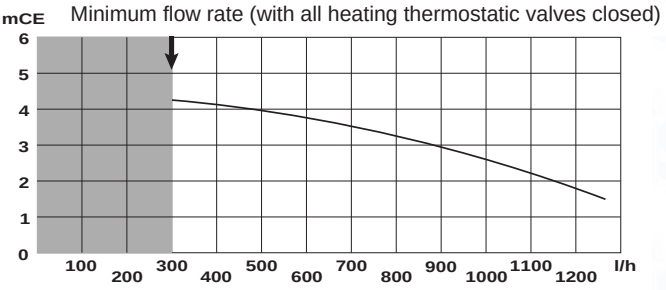

Pump head available at the outlet of the boiler **Fig. 9**

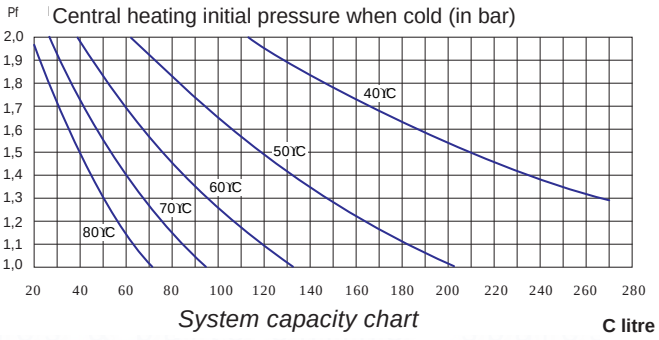

System capacity chart

Fig. 10

The boiler is fitted with an automatic by-pass as standard.

The graph (fig. 9) shows the development of the pressure available in relation to flow on exit from the boiler. (Designed temperature rise = 20°C).

To ensure correct operation, the minimum flow of the appliance must be 300 l/h. (Thermostatic taps closed).

Capacity of the installation.

The water heater is fitted with a pressurised expansion vessel.

Maximum. volume of expansion vessel: 6 litres.

Pressure: 1 bar.

The volume of the expansion vessel in a pressurised appliance varies according to:

- the average operating temperature in °C

- the static height, which is the difference in metres between the highest point of the appliance and the expansion vessel axis).

The minimum cold filling pressure of the appliance is 1 bar (recommended pressure between 1.2 and 1.7 bar).

The pressure of the expansion vessel should always be greater than the static height (in metres) divided by 10.

11 Installation Requirements

Reference Standards
In the United Kingdom, the installation and initial start up of the boiler must be by a CORGI Registered installer in accordance with the installation standards curently in effect, as well as with any and all local health and safety standards i.e. CORGI.

In the Republic of Ireland the installation and initial start up of the appliance must be carried out by a Competent Person in accordance with the current edition of I.S.813 "Domestic Gas Installations" and the current Building Regulations, reference should also be made the the current ETCI rules for electrical installation.

The installation of this appliance must be in accordance with the relevant requirements of the Local Building Regulations, the current I.E.E. Wiring Regulations, the by-laws of the local water authority, in Scotland, in accordance with the Building Standards (Scotland) Regulation and Health and Safety document No. 635, "Elelectricity at Work Regulations 1989" and in the Republic of Ireland with the current edition of I.S. 813 and the Local Building Regulations (IE).

C.O.S.H.H.
Materials used in the manufacture of this appliance are non-hazardous and no special precautions are required when servicing.

Codes of Practice
Installation should also comply with the following British Standards Codes of Practice:

BS 7593:1992	**Treatment of water in domestic hot water central heating systems**
BS 5546:1990	**Installation of hot water supplies for domestic purposes**
BS 5440-1:2000	**Flues**
BS 5440-2:2000	**Air Supply**
BS 5449:1990	**Forced ciculation hot water systems**
BS 6798:1987	**Installation of gas fired hot water boilers of rated input not exceeding 60kW**
BS 6891:1989	**Installation of low pressure gas pipe up to 28mm**
BS 7671:2001	**IEE Wiring Regulations**
BS 4814:1990	**Specification for expansion vessels**
BS 5482:1994	**Installation of L.P.G.**

and in the Republic of Ireland in accordance with the following codes of practice

I.S. 813 **Domestic Gas Installations**

must be made to British Gas Document DM2, or advice sought from CORGI.
Avoid installing the boiler where the air inlet can be polluted by chemical products such as chlorine (swimming pool area), or ammonia (hair-dresser), or alkalin products (launderette)

Flue
Detailed information on flue assembly can be found in **Section 12 "Connecting the Flue"**.

The boiler must be installed so that the flue terminal is exposed to the free passage of external air at all times and must not be installed in a place likely to cause nouisance. It must not be allowed to discharge into another room or space such as an outhouse or closed lean-to.
The terminal should be located with due regard for the damage or discolouration that might occur to buildings in the vicinity and consideration msut also be given to adjacent boundaries.
In cold or humid weather, water vapour may condense on leaving the flue terminal. The effect of such "pluming" must be considered.

Fig. 11

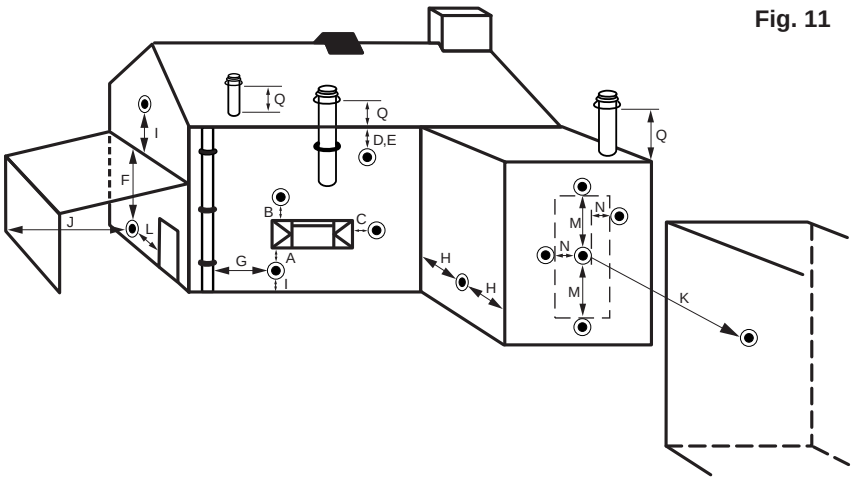

The minimum acceptable clearances are shown below:

- A Directly below an opening, window, etc	300 mm
- B Above an opening, window, etc	300 mm
- C Horizontally to an opening, window, etc	300 mm
- D Below gutters, soils pipes or drain pipes	75 mm
- E Below eaves	200 mm
- F Below balconies or car port roof	200 mm
- G From a vertical drain pipe or soil pipe	150 mm
- H From an internal or external corner	300 mm
- I Above ground roof or balcony level	300 mm
- J From a surface facing the terminal	600 mm
- K From a terminal facing the terminal	1200 mm
- L From an opening in the car port into the dwelling	1200 mm
- M Vertically from a terminal on the same wall	1500 mm
- N Horizontally from a terminal on the same wall	300 mm
- Q Fixed by Ubbink Rolux 4 GM flue terminal	

NOTE: THE FLUE MUST NOT BE INSTALLED IN A PLACE LIKELY TO CAUSE A NUISANCE.

It may be necessary to protect the terminal with a guard. Reference should be made to the Building Regulations for guidance. Suitable guards may be obtained from the following manufacturer:

Quinnel Barret & Quinnel Wireworks
Old Kent Road
London SE15 1NL

Tel: 020 7639 1357

Ventilation
The room in which the boiler is installed does not require specific ventilation. **If it is installed in a cupboard or compartment**

permanent ventilation is not required for cooling purposes.

Gas Supply
The gas installation and soundness testing must be in accordance with the requirements of BS 6891.The boiler requires a 22 mm supply. Ensure that the pipe size is adequate for demand including other gas appliances on the same supply.

Electrical Supply
The appliance requires an earthed 230V - 50 Hz supply and must be in accordance with current I.E.E. It must also be possible to be able to completely isolate the appliance electrically. Connection should be via a 3 amp fused double-pole isolating switch with contact separation of at least 3 mm on both poles. Alternatively, a fused 3 Amp. 3 pin plug and unswitched socket may be used, provided it is not used in a room containing a bath or shower. It should only supply the appliance.

The boiler is suitable for sealed systems only. The maximum working pressure for the appliance is 10 bar. All fittings and pipework connected to the appliance should be of the same standard. If there is a possibility of the incoming mains pressure exceeding 10 bar, particularly at night, then a suitable pressure limiting valve must be fitted.
The boiler is designed to provide hot water on demand to multiple outlets within the property. If there is a requirement for greater demands, for example if the property has several bathrooms and cloakrooms, a vented or unvented hot water storage system may be used.

Showers
Any shower valves used with the appliance should be of a thermostatic or pressure balanced type. Refer to the shower manufacturer for performance guidance and suitability.

Flushing and Water Treatment
The performance of the appliance could be impaired by system debris or the effects of corrosion. The system must be flushed thoroughly to remove metal filings, solder, machining oils and other fluxes and greases before connecting the boiler. If it is an existing system, an appropriate flushing and descaling agent should be used. Refer to BS 7593 (1992) for guidance. For more information on the use of corrosion inhibitors, flushing and descaling agents, advice can be sought from the manufacturers of water treatment products such as:

Betz Dearborn Ltd
Foundry Lane
Widnes
Cheshire
WA8 8UD

Tel: 0151 424 5351

Fernox Manufacturing
Britannica Works
Clavering
Essex
CB11 4QZ

Tel: 01799 550811

System Controls
The boiler is electrically controlled and is suitable for most modern electronic time and temperature controls. The addition of such external controls can be beneficial to the efficient operation of the system. The boiler connections for

external controls are 24V and so only controls of 24V or that have voltage free contacts should be used.

Location
The boiler can be installed on any suitable internal wall. Provision must be made to allow the correct routing of the flue and siting of the terminal to allow the safe and efficient removal of the flue products. A compartment or cupboard may be used provided that it has been purpose-built or modified for the purpose. It is not necessary to provide permanent ventilation for cooling purposes. Detailed recommendations are given in BS 5440 pt 2. If it is proposed that it is installed in a timber framed building then reference

Where a room sealed appliance is installed in a room containing a bath or shower, the appliance and any electrical switch or appliance control, utilising mains electricity should be situated specifically in accordance with current IEE Wiring Regulations.

For unusual locations, special procedures may be necessary. **BS 6798:1987** gives detailed guidance on this aspect.

12 Connecting the Flue

The boiler must only be installed with a flue supplied by the boiler manufacturer.
These kits are supplied separately to the appliance in order to respond to different installation solutions. For more information with regard to the inlet/outlet accessories consult the flue brochure and the following instructions.. The boiler is predisposed for the connection to a twin flow concentric gas intake and exhaust duct system.

WARNING!!
The exhaust gas ducts should not be in contact with or close to inflammable material and should not pass through building structures or walls made of inflammable material.
When replacing an old appliance, the flue must be changed.

IMPORTANT!!
Ensure that the flue is not blocked.
Ensure that the exhaust gas ducts do not have leaks

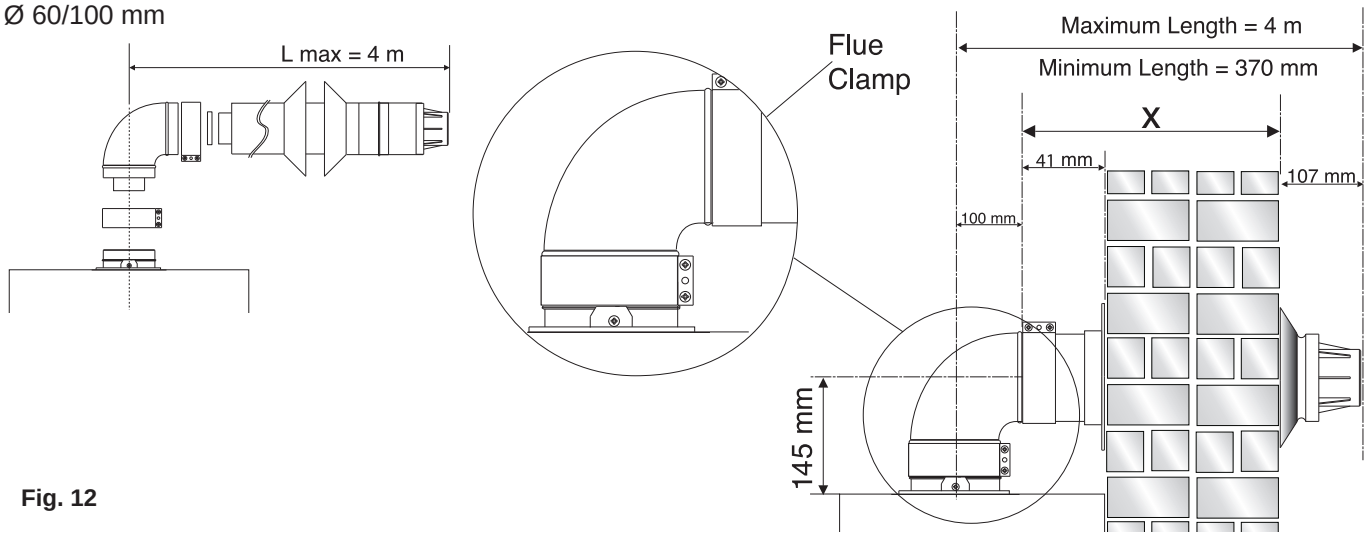

Fig. 12

12.1 Fitting the coaxial flue (Ø 60/100 Horizontal)

CONTENTS:
1x SILICONE O-RING (60mm)
1x ELBOW (90°)
2x WALL SEALS (INTERNAL & EXTERNAL)
1x ALUMINIUM FLUE PIPE INCLUDING TERMINAL (1 METRE - 60/100)
2x FLUE CLAMPS
4x SCREWS
2x SEALS

Once the boiler has been positioned on the wall, insert the elbow into the socket and rotate to the required position. NOTE: It is possible to rotate the elbow 360° on its vertical axis.

Using the flue clamps, seals and screws supplied **(Fig 12)** secure the elbow to the boiler.

The 1 metre horizontal flue kit (705958) supplied is suitable for an exact **X dimension** of 823mm, and the 750mm horizontal flue kit (705785) is suitable for an exact **X dimension** of 573mm.

Measure the distance from the face of the external wall to the face of the flue elbow **(X - Fig 12),** add 22 mm to this measurement, you now have the total length of flue required (including the terminal), this figure must now be subtracted from 860mm, you now have the total amount to be cut from the plain end of the flue.

Cut the flue to the required length ensuring that the distance between the inner and the outer flue is maintained **(Fig 13)**.

e.g.
X = 508mm + 22mm = 530mm
860 - 530 = 330mm (Length to be cut from the plain end of the flue).

Once cut to the required length, ensure that the flue is free from burrs and reassemble the flue. If fitting the flue from inside of the building attach the grey outer wall seal to the flue terminal and push through the flue through the hole, once the wall seal has passed through the hole, pull the flue back until the seal is flush with the wall. Alternatively, the flue can be installed from outside of the building, the grey outer seal being fitted last.

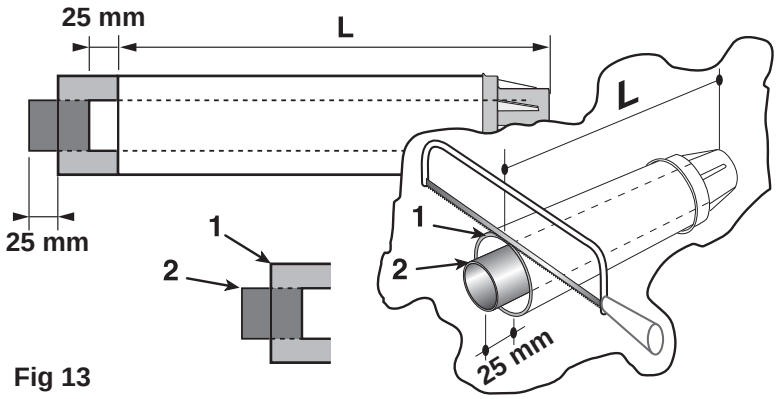

Fig 13

WARNING!!
Consult the table on Page 19, to see if a restrictor is required for the type of flue system being used. Should it be necessary to fit the restrictor, it must be fitted as shown in **Fig. 14**.

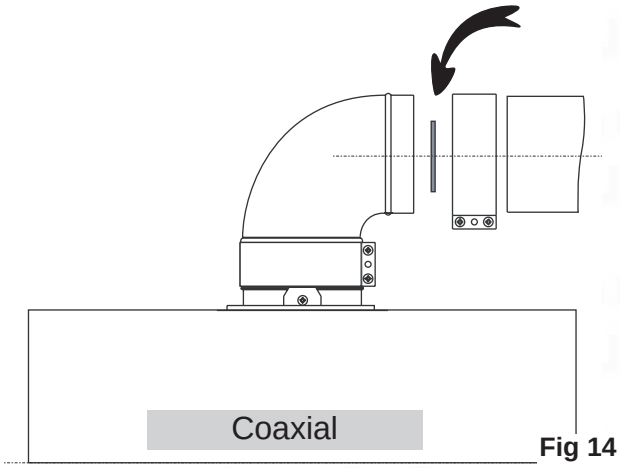

Fig 14

12.2 Fitting the telescopic flue (Ø 60/100 Horizontal)

CONTENTS:
1x SILICONE O-RING (60mm)
1x ELBOW (90°)
2x WALL SEALS (INTERNAL & EXTERNAL)
1x ALUMINIUM FLUE PIPE INCLUDING TERMINAL (TELESCOPIC - 60/100)
2x FLUE CLAMPS
8x SCREWS
2x SEALS

The telscopic flue is suitable for use with an exact minimum **X dimension** of 270mm and an exact maximum **X dimension** 470mm.

IMPORTANT!!
Do not extend the telescopic flue to an X dimension of more than 470mm. If longer lengths are required use extension pieces as necessary. Under no circumstances must the flue be cut.
The wall must then be made good around the flue (ensuring a fall of 1° is maintained away from the boiler to the flue terminal). Once made good, place the inner (white) wall seal over the flue and push up to the wall, secure the flue to the elbow by using the clamp supplied.

For each additional 90° elbow 1 metre must be removed from the total flue length (maximum 4 metres including the 1st elbow). For each additional 45° elbow 0.5 metre must be subtracted from the total flue length (**Fig 16**).

12.3 Fitting the coaxial flue (Ø 60/100 Vertical)

Contents:
1x Silicone O-Ring (60mm)
1x Conical Adaptor (60/100mm)
1x Vertical Flue Kit (80/125mm)
3x Screws

The vertical flue kit is supplied with a specially designed weather proof terminal fitted, it can be used either with a flat roof or a pitched roof. (see Figs. 17 and 18).
The Vertical flue kits maximum and minimum useable lengths with both flat and pitched roof flashings are indicated in Figs. 17 and 18 also**).**

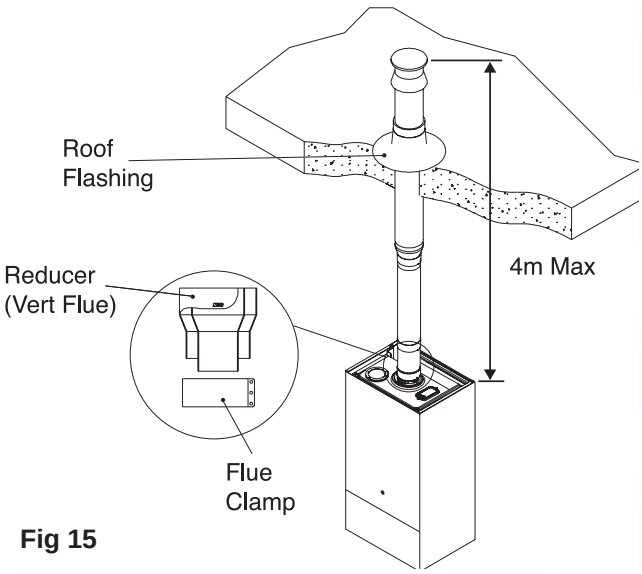

Fig 15

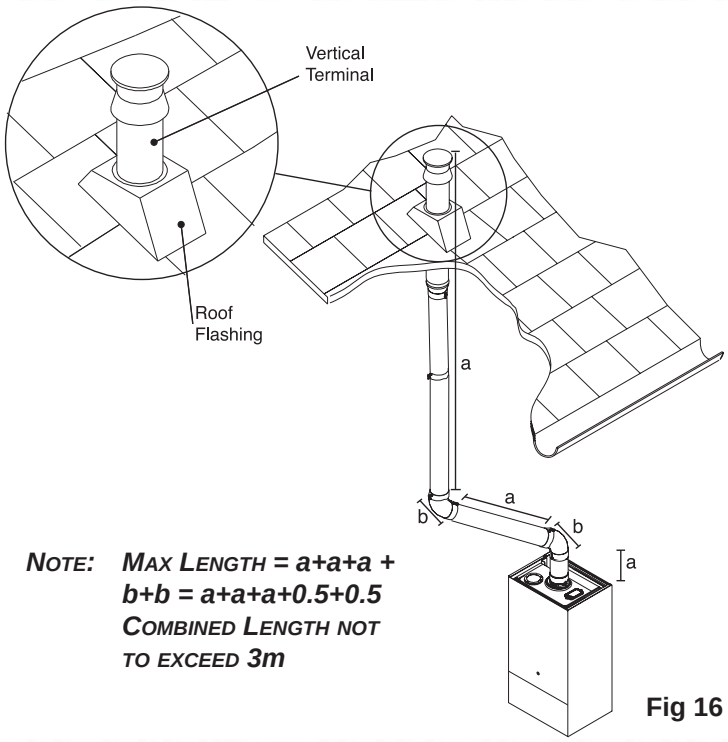

Note: ***Max Length = a+a+a + b+b = a+a+a+0.5+0.5 Combined Length not to exceed 3m***

Fig 16

Before proceeding to fit the flue, ensure that the maximum flue length has not been exceeded and that all elbows and bends have been taken into consideration, the maximum flue length is 4 metres, for each additional 90° elbow 1 metre must be subtracted from the total flue length, and for each 45° 0.5 metres must be subtracted from the total flue length **(the offset and height of 2 x 45° bends can be seen in Fig. 19).**

Mark the position of the flue hole in the ceiling and/or roof (see Fig. 17 for distance from wall to the centre of the flue).

Cut a 120mm diameter hole through the ceiling and/or roof and fit the flashing plate to the roof.
Should it be necessary to cut the flue ***DO NOT*** cut the outer white ar inlet tube, cut the aluminium exhaust flue 6mm longer than the outer white air tube when used at minimum length. ***DO NOT*** cut more that 250mm from the inner aluminium exhaust flue.

To connect the vertical flue kit directly to the boiler, place the adaptor (see Fig. 15) (supplied with vertical flue kit) onto the exhaust manifold and secure with the clamp, the vertical flue kit must then be inserted through the roof flashing, this will ensure that the correct clearance above the roof is provided as the terminal is a fixed height.

Should extensions be required, they are available in 1 metre **(Part No. 705786)**, 500mm **(Part No. 705790)** and 160mm lengths **(Part No. 705812)**, they must be connected directly to the boiler and secured with the clamp supplied before connecting the adaptor to allow the vertical flue kit to be fitted. In the event that extension pieces need to be shortened, they

must only be cut at the male end and it must be ensured that the distance between the inner and outer flue are kept (Fig. 13).

When utilising the vertical flue system, action must be taken to ensure that the flue is supported adequately to prevent the weight being transferred to the appliance flue connection.

When the flue passes through a ceiling or wooden floor, there must be an air gap of 25mm between any part of the flue system and any combustible material. The use of a ceiling plate will facilitate this. Also when the flue passes from one room to another a fire stop must be fitted to prevent the passage of smoke or fire, irrespective of the structural material through which the flue passes.

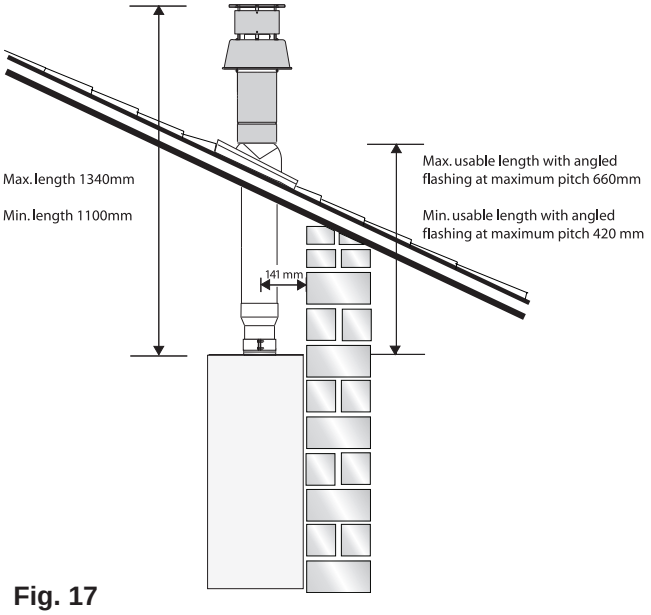

Fig. 17

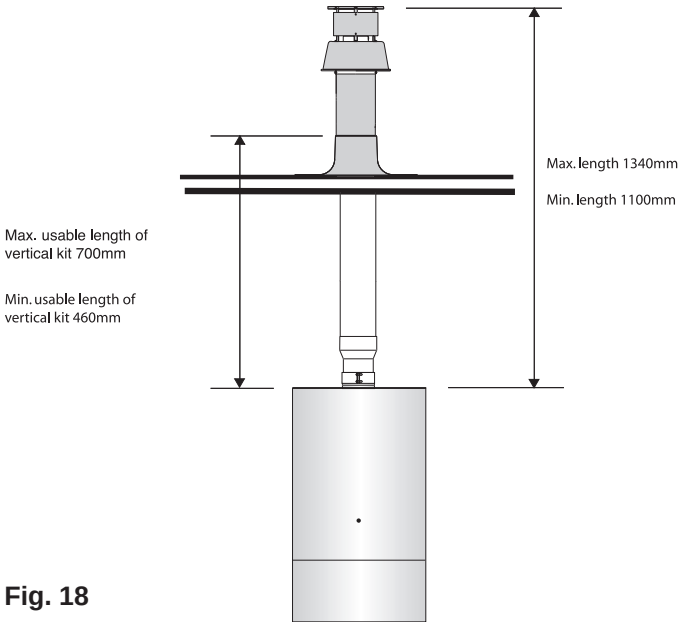

Fig. 18

Minimum offset distance when using 2x 45° bends

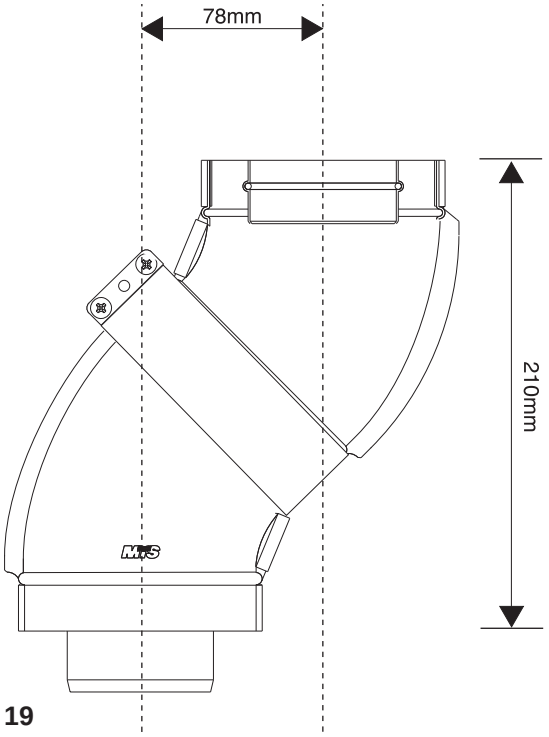

Fig. 19

12.4 Fitting the 5” flue (Ø 80 / 125)

Once the boiler has been positioned on the wall, it is necessary to insert the Ø80/125 adaptor into the boiler flue socket.

Place the Ø 60mm insert (Fig. 20) into the boilers exhaust connection;

Fit the grey seal over the boilers flue connection and ensuring all lip seals are fitted correctly push the adaptor onto the boilers flue connection, checking that the seal is fitted correctly over the adaptor;

To secure the adaptor, use the clamp and screws provided (Fig. 20).

To fit extensions or elbows it is first necessary to ensure that the red lip seal is fitted correctly into the inner flue, once verified, it is simply necessary to push them together, no clamps are necessary to secure the flue components.

NOTE: WHERE THE TOTAL LENGTH OF FLUE IS GREATER THAN 5 METRES, THE CONDENSATE DRAIN ON THE ADAPTOR MUST BE UTILISED.

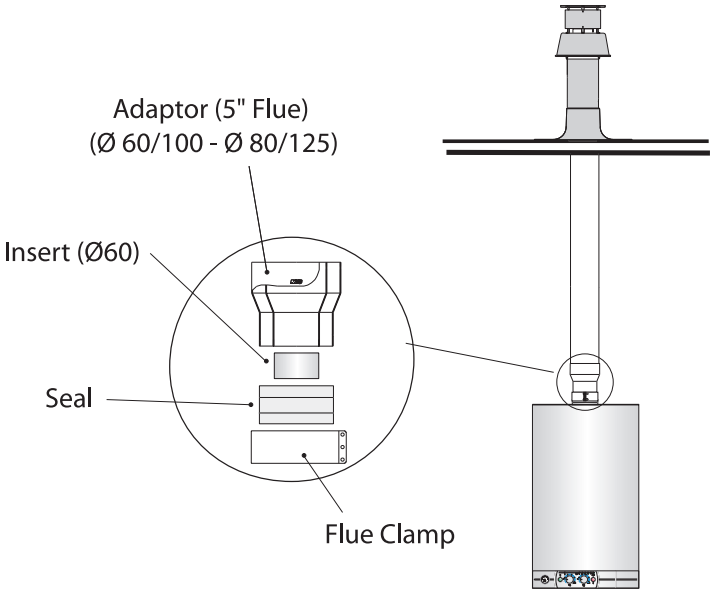

Fig. 20

Minimum offset distance when using 2x 45° bends
(Ø80/125 Flue)

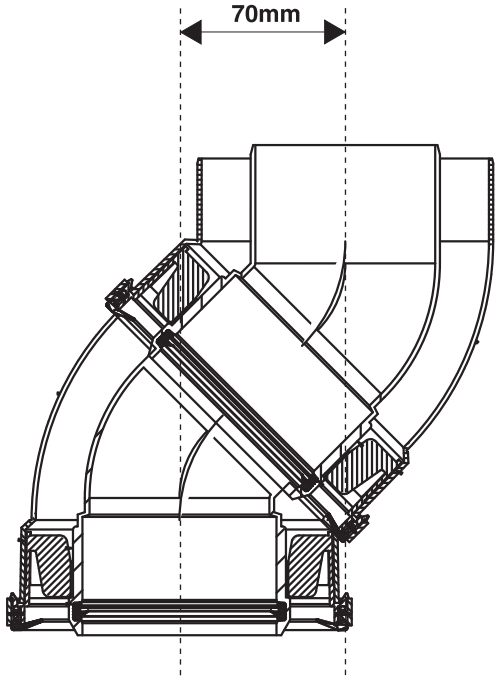

Fig. 21

12.5 Fitting the twin pipe (Ø80/80)

Where it is not possible to terminate the flue within the distance permitted for coaxial flues, the twin flue pipe can be used by fitting a special adaptor to the flue connector and using the aperture for the air intake located on top of the combustion chamber.

Considerations necessary for twin flue installation;

It is most important to avoid any possible condense formation entering the appliance.

Condense may form when the 24kW boiler has an exhaust pipe longer than 5.5m and on the 30kW when the exhaust pipe is longer than 7.5m. If this is the case, there are two options;

1) Where condense will form but can be negated with insulated flue, install the insulated flue ensuring it has a fall of 5mm in every metre away from the boiler.

2) The exhaust flue will have a fall of 3° back to the boiler and a suitable trap will be fitted on the exhaust as close to the boiler as possible, condense will then be suitably disposed of.

Where the flue runs through cold spots, i.e. loft areas, condense is likely to be formed, therefore in such cases a fall back to the boiler and a trap is required.

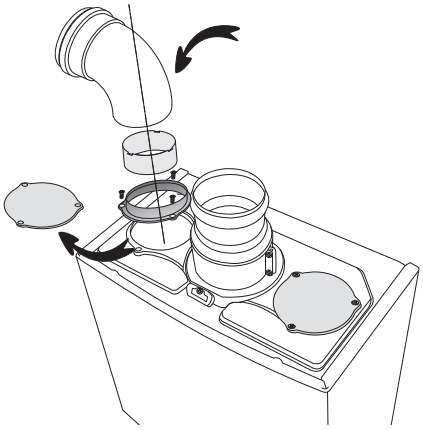

Fig. 22

If the two elbows are to be run in the same lateral direction and if you need to reduce the required space above the boiler, the minimum 230 mm measurement can be reduced by carefully cutting the elbow below the air inlet by 25 mm

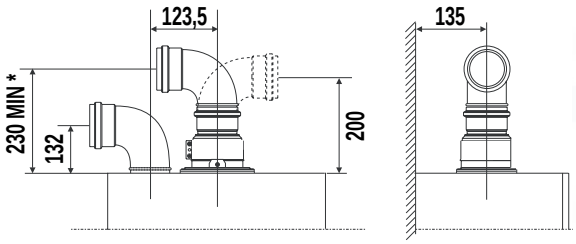

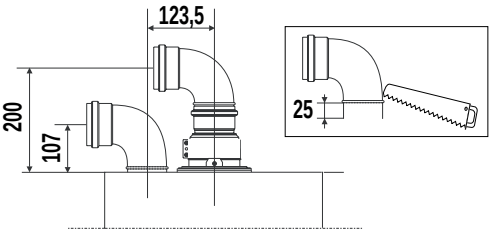

Always ensure that the flue is adequately supported, avoiding low points. (MTS supply suitable clamps as Part No. 705778).

To utilise the air intake it is necessary to:

1) Take the air intake cover off
2) Assemble the flange on the header supplied with the boiler
3) Insert the restrictor if necessary, on the tube or the elbow
4) Insert the header on the tube or the elbow up until the lower stop
(you do not have to use the washer).
5) Insert the elbow/header in the boiler air intake hole and fasten it with screws

The twin flue pipes can be fitted with or without additional elbows and need no clamps, simply ensure that the red o-ring is inserted in the female end of the flue pipe and push the extension piece fully into the previous section of flue pipe or elbow, check that the o-ring is not dislodged when assembling the flue.

Twin pipe can also be converted back to Coaxial flue to enable vertical termination with a coaxial kit by using the pipe bridge (Twin - Coaxial Adaptor - Part No. 705767). When running the twin flue pipe vertically, a condense trap must always be used on the exhaust pipe.

It is not recommended that the pipe bridge for horizontal termination, however in the unlikely event that this proves to be a necessity it is extremely important that the entire flue has a fall of 3° back to the boiler, is suitably trapped and where the

60mm inner flue of the concentric terminal connects to the pipe bridge, this point must be adequately sealed with silicone sealant to avoid condense leakage at this point.

NOTE: Vertical twin flue installations must have a trap on the exhaust. MTS supply a suitable condense trap Part No. 705774 and recommend that this be used in the event that the flue may not form condense.

When siting the twin flue pipe, the air intake and exhaust terminals must terminate on the same wall, the centres of the terminals **must** be a minimum of 280 mm apart and the air intake **must** not be sited above the exhaust terminal (refer to Fig. 25). The air intake pipe can be run horizontally, however, the terminal and the final 1 metre of flue must be installed with a fall away from the boiler to avoid rain ingress.

It is also strongly recommended that the air intake pipe run be constructed of insulated pipe to prevent condense forming on the outside of the tube.

The maximum permissible flue length for twin flue is dependent on the type of run used.

For flue runs with the intake and exhaust pipes under the same atmospheric conditions (TYPE 4) the maximum length is 24 metres (24kW) and 30 metres (30kW), for runs with the terminals under different atmospheric conditions (TYPE 5) the exhaust terminal **must** extend 0.5 metres above the ridge of the roof (this is not obligatory if the exhaust and air intake pipes are located on the same side of the building). For TYPE 5 also, the maximum permissible combined length is 45 metres (24kW) and 60 metres (30kW).

The maximum length is reached by combining the total lengths of both the air intake and exhaust pipes. Therefore a maximum length of 45 metres for example, will allow a flue run of 22.5 metres for the air intake and 22.5 metres for the exhaust pipes, also for each 90° elbow 1.3 metres must be subtracted from the total length and for each 45° elbow 1 metre must be subtracted from the total flue length.

Some of the acceptable flue configurations are detailed page 21.

For further information relating to flue runs not illustrated, please contact the Technical Department on 01494 539579.

WARNING!!
Consult the table on Page 20, to see if a restrictor is required for the type of flue system being used. Should it be necessary to fit the restrictor, it must be fitted as illustrated in Fig. 23.

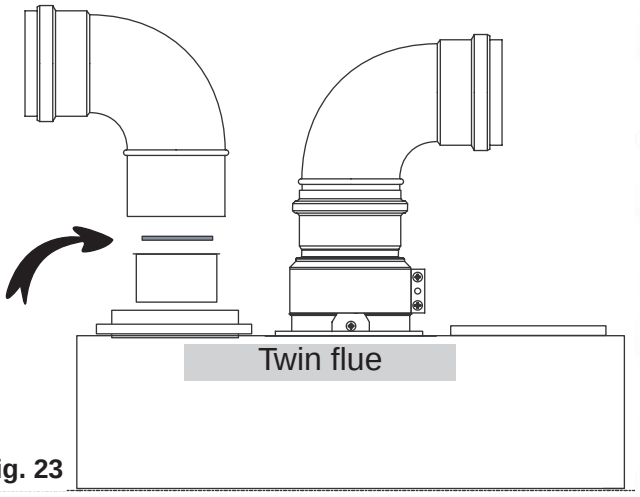

Fig. 23

In the event that twin flue pipes are used, and the boiler has a side clearance of less than 60mm from the wall, it is necessary to cut a larger diameter hole for the flue pipe, this should be ø10 cm, this will then allow for easier assembly of the air intake elbow and the tube outside the wall (see Fig. 24).

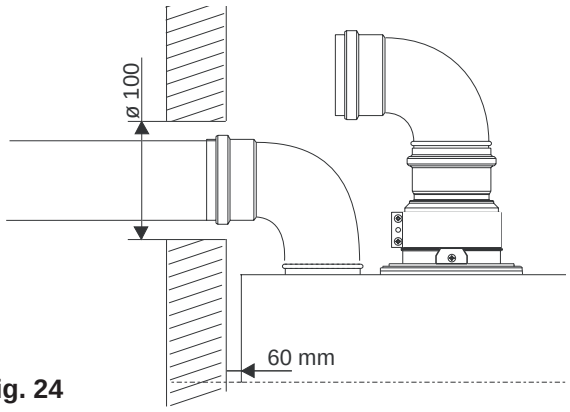

Fig. 24

Concentric outlet 60/100	Restrictor ø 88.5	Without restrictor	Max. length
24 kW (Type 1, Type 2, Type 3)	L min. = 0.3 m L max. = 1 m	L min. = 1 m L max. = 4 m	4 m /
30 kW (Type 1, Type 2, Type 3)	L min. = 0.3 m L max. = 1 m	L min. = 1 m L max. = 4 m	4 m /

L = total length of gas intake and exhaust ducts.

Twin flue outlet 24 kW	Restrictor ø 41	Restrictor ø 46	Restrictor ø 51	Without restrictor
Type 4 80/80	L min. > 0 m L max. = 2.5 m	L min. > 2.5 m L max. = 12 m	L min. > 12 m L max. = 19 m	L max. > 19 m L max. = 24 m
Type 5 80/80 Air intake length 1 m.	L min. > 0 m L max. = 10 m	L min. > 10 m L max. = 29 m	L max. > 29 m L max. = 35 m	L max. > 35 m L max. = 45 m

L = total length of gas intake and exhaust ducts.
If the exhaust gas duct length is longer than 5.5 m, you will need a condensate drain

Twin flue outlet 30 kW	Restrictor ø 44	Restrictor ø 50	Without restrictor
Type 4 80/80	L min. > 0 m L max. = 3 m	L min. > 3 m L max. = 12 m	L min. > 12 m L max. = 30 m
Type 5 80/80 Air intake length 1 m.	L min. > 0 m L max. = 11.5 m	L min. > 11.5 m L max. = 30 m	L max. > 30 m L max. = 60 m

L = total length of gas intake and exhaust ducts.
If the exhaust gas duct length is longer than 7.5 m, you will need a condensate drain

For coaxial systems, the maximum development value L, mentioned in the table above also takes into accout an elbow.
For twin flue isystems the maximum development value L, mentioned in the table includes the exhaust gas/air intake terminal.
Type 5 outlets should respect the following instructions:
1- Keep the same ø 80 mm for the gas intakes and exhaust gas ducts.
2- If you need to insert elbows in the gas intake and exhaust gas ducts, you should consider for each one the equivalent length to be included in the calculation of developed length.
3- The exhaust gas duct should jut above the roof by at least 0.5 m.
4- The intake and exhaust gas ducts in Type 5 must be installed on the same wall, or where the exhaust is vertical and the air intake horizontal, the terminals must be on the same side of the building.

NOTE: UNDER SOME CIRCUMSTANCES, CONDENSE MAY FORM AT THE EXHAUST TERMINAL, SPECIAL ATTENTION MUST BE PAID WITH REGARD TO POSSIBLE CONDENSE DRIPPING FROM THE TERMINAL

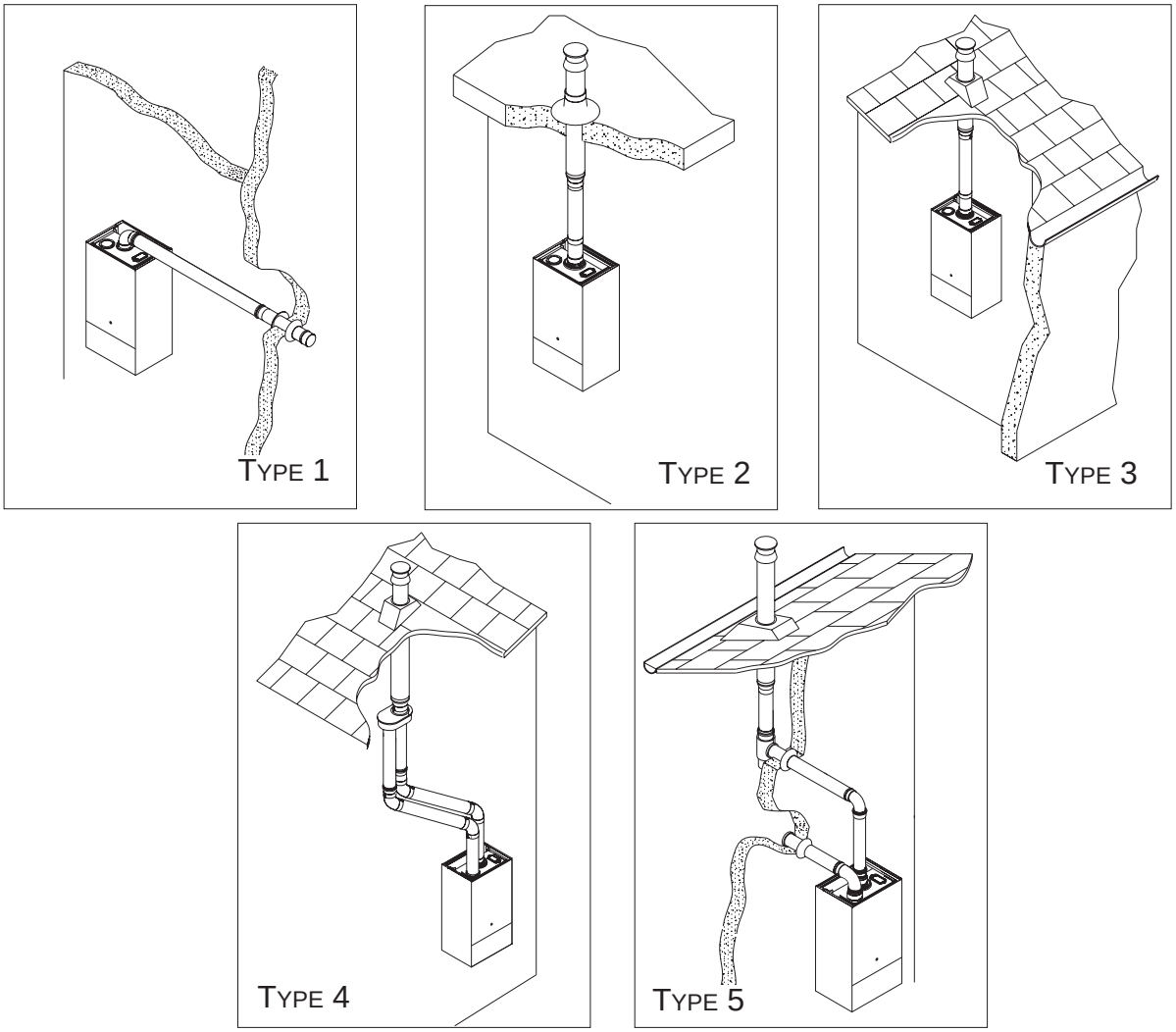

NOTE: DRAWINGS ARE INDICATIVE OF FLUEING OPTIONS ONLY.

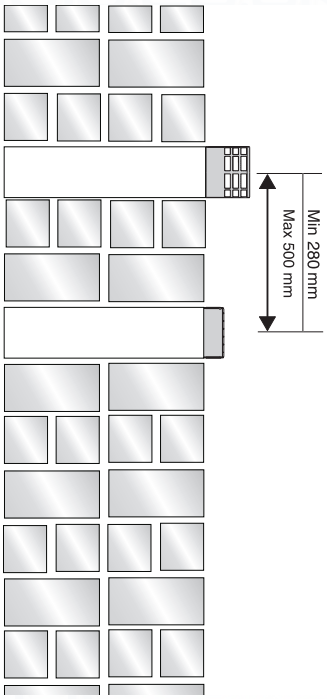

AIR INTAKE MUST NOT BE FITTED ABOVE THE EXHAUST

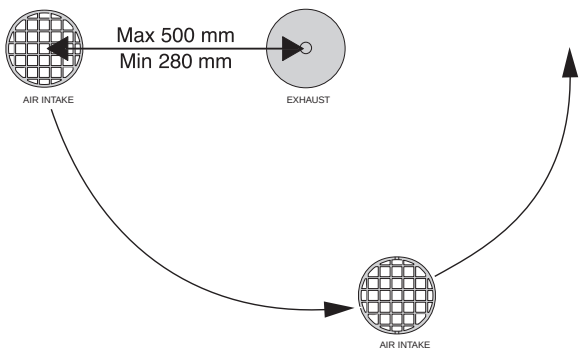

Fig. 25

13 Installing the Boiler

- place the template in the selected position on the wall
- fit the hanging bracket
- Install the gas and water pipes and the electrical connection to the locations shown on the fitting template
- Drill the hole for the flue
- unscrew the clamp locking bolt **A**, which secures the front panel **(Fig. 26)**
- remove the front panel from the boiler **(1 & 2 Fig. 26)**
- offer the water heater up to its bracket and allow it to drop into position while pressing on it **(Fig. 27)**
- fit the connectors and taps (**Fig. 2, page 5**)
- connect the water and gas pipes to the boiler, with the various seals
- connect the flue to the boiler (for more detailed instructions on this see **Section 12 Connecting the Flue**).

The safety valve discharge pipe must be run to outside and discharge in a place not likely to cause nuisance or injury.

Cleaning the central heating system

Once the central heating system has been connected, it is essential to clean the appliance with an appropriate product (dispersing agent), the boiler and system must be filled and flushed cold, the system must be refilled and heated to temperature and flushed again, to remove filings, solder, and various factory oils and greases. The system must then be refilled again and inhibited.

Do not use any solvent or aromatic agent.

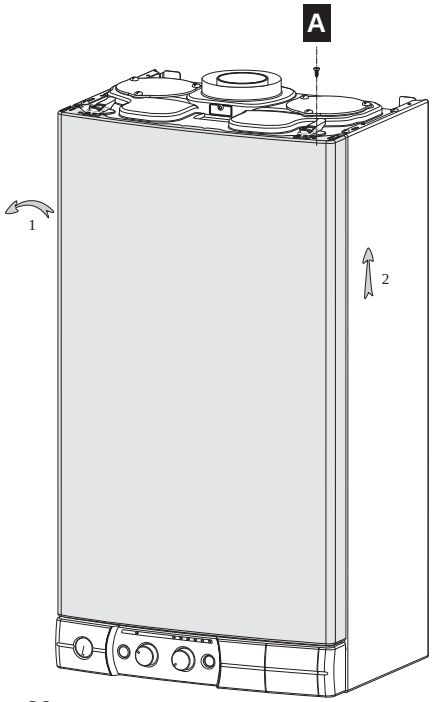

Fig. 26

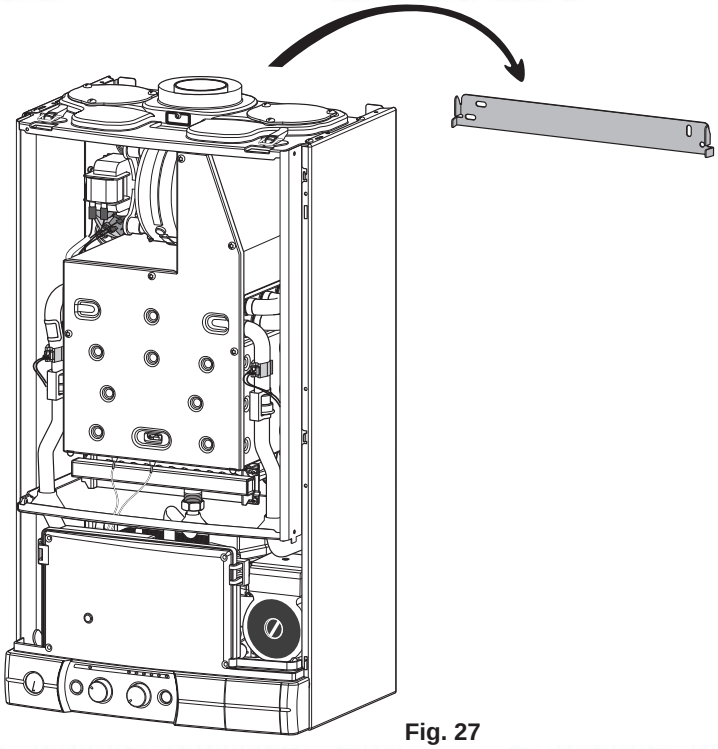

Fig. 27

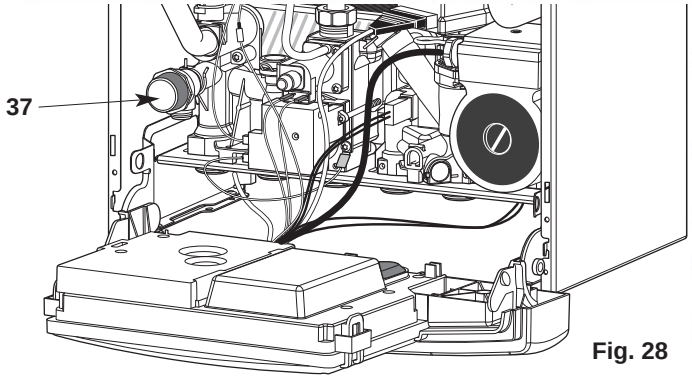

Fig. 28

14 Electrical Connections

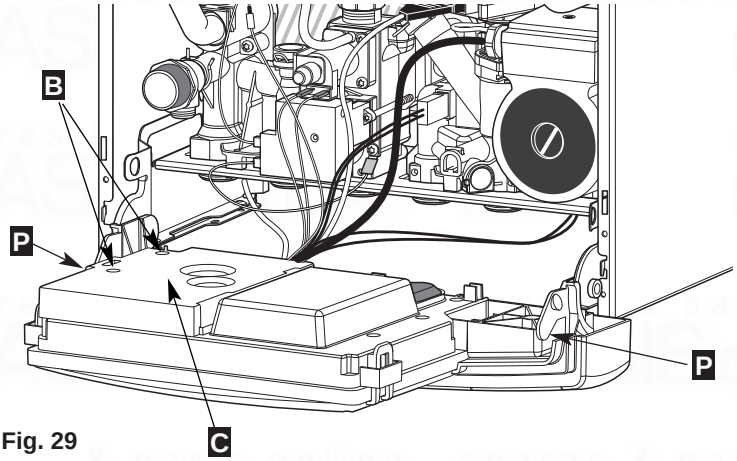

Fig. 29

IMPORTANT!!
Connection should be via a 3 amp fused double-pole isolating switch with contact separation of at least 3 mm on both poles. Alternatively, a fused 3 Amp. 3 pin plug and unswitched socket may be used, provided it is not used in a room containing a bath or shower. It should only supply the appliance.

The 240 V and earth connection are made by using the lead provided at J1 (Fig. 30).

IMPORTANT!!
If the supply cable is damaged, it must be replaced.

Room thermostat connection

Before it leaves the factory, the boiler is set to operate without a room thermostat: a shunt **S** is placed on connector **D**.

The room thermostat connection is made on this connector

- Lower the electronic control unit by releasing the side locking pins **P (Fig. 29)**, to gain access to the reverse side
- Remove screws **B** and remove cover **C (Fig. 29)**.

The room thermostat connection can then be accessed.

- Remove connector **D** and shunt **S**.
- Connect the thermostat wires to the connector **(D)**.
- Reconnect connector **D**.

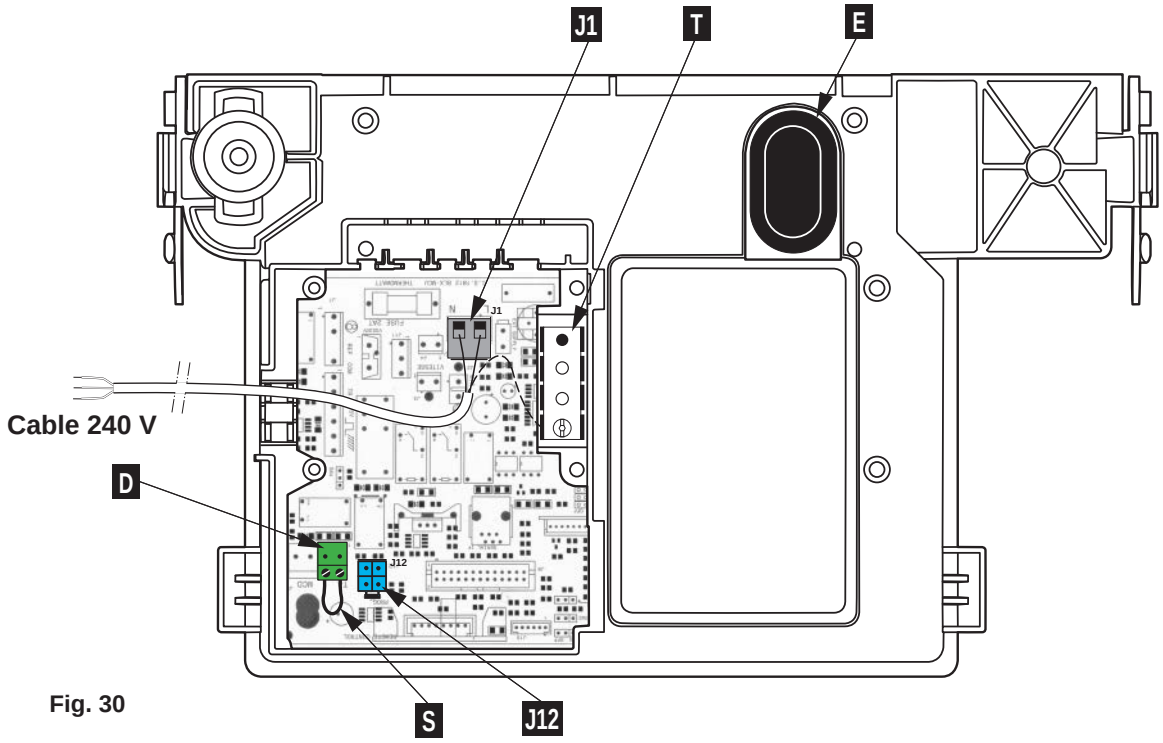

Fig. 30

14 Electrical Connections (continued)

- If a remote time clock is to be fitted, using a volt-free switching time clock, connect the switching wires from the time clock following points above (see also **Diagram B Fig. 31**).

- If using an external time clock and room thermostat, these must be connected in series as above (see also **Diagram C Fig. 31**).

Live and Neutral connections to operate the clock motor must be taken from a suitable source.

Connector **J12 (Fig. 30)**, is provided for connecting an optional integral time clock or programmer, for fitting instructions, please refer to those provided with the clock.

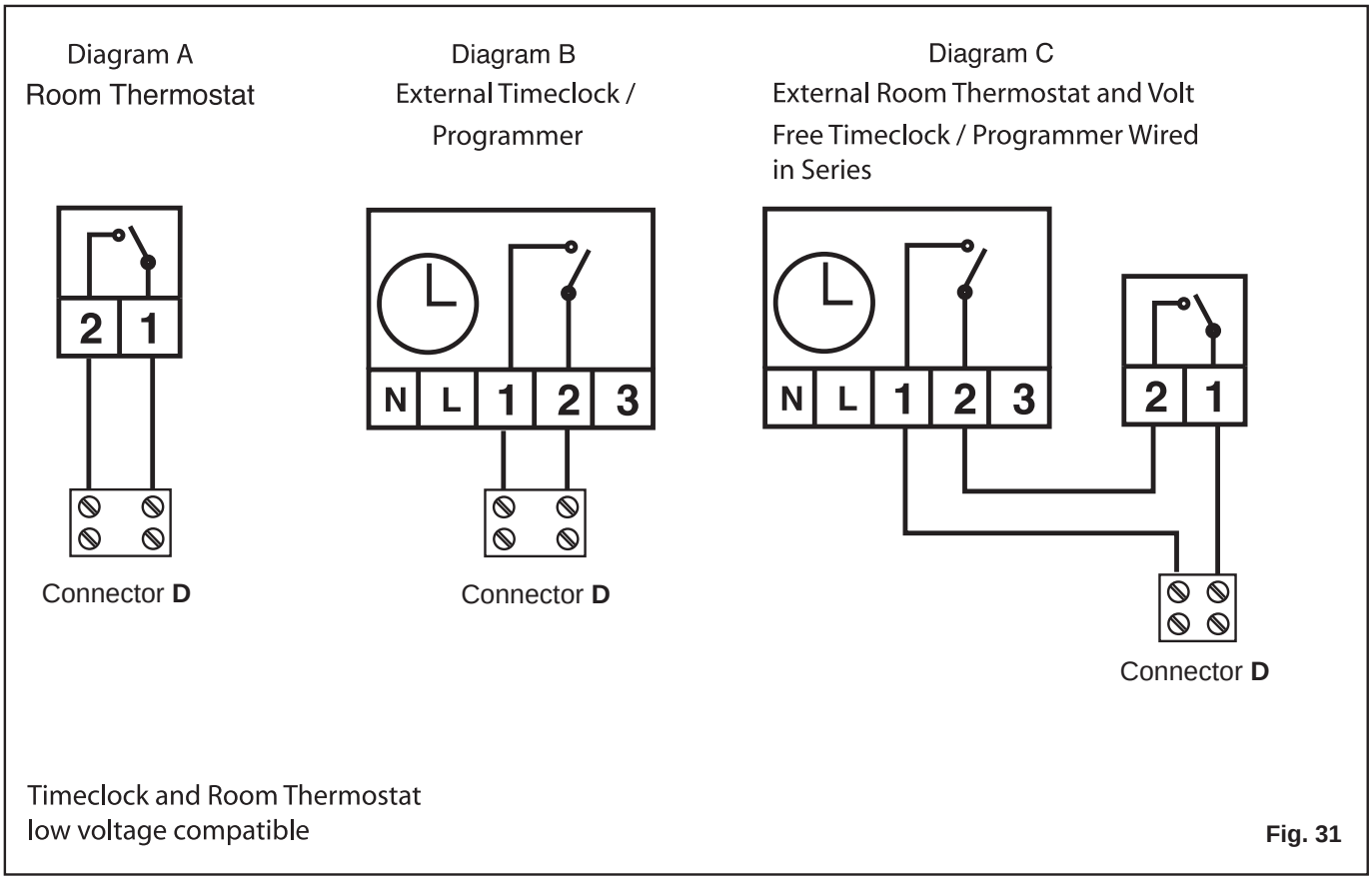

Fig. 31

PRESSURISING (Fig. 32)

Domestic Hot Water Circuit:
- open the cold water tap **34**
- open all hot water taps until water flows

Central Heating Circuit:
- Open flow and return valves on the boiler **31** and **35**
- Loosen the cap on the automatic air vent
- Open filling taps **36** and **37**, and vent the radiators.
- Set the system pressure, close filling taps **36**, **37** and remove filling loop **38**.
- Check for leaks.
- Manually check pump is free to turn

Gas circuit
- open the gas tap **33**
- purge the gas circuit
- test the gas circuit for soundness

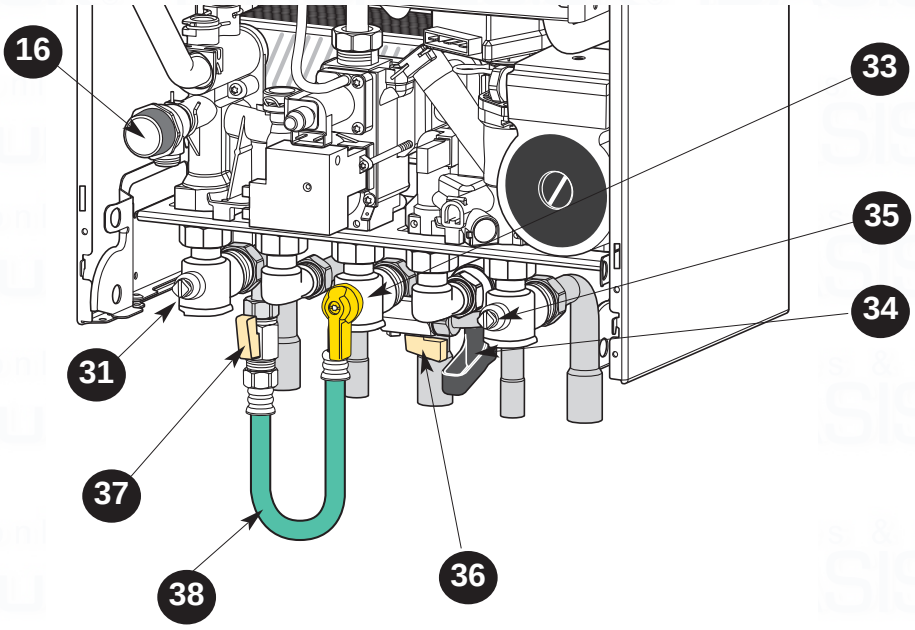

Fig. 32

SETTINGS

The boiler is supplied with all the dip switches **OFF** (Fig. 33) and the potentiometers turned fully anti-clockwise. It is possible to adjust these settings as required.
In this case, it is necessary to access the electronic control unit.
Switch the power on, remove the casing and open the control unit by pressing the two side locking pins **P** (Fig. 29). The setting buttons are on the circuit board behind the blanking cover **E** (Fig. 30)

- **A1** allows the **H**eating **A**nti-cycle **T**iming (**HAT)** to be set to 30 seconds or 3 minutes
  HAT: Prevents the burner from relighting for the time set (30 seconds or 3 minutes) once the central heating circuit has reached the temperature set on the Central Heating temperature knob **22** (Fig. 1).
- **A2** reserved
- **A3** to fix the heating temperature setting to 40°C whatever the setting of the Central heating temperature knob **22** (Fig. 1)
- **A4** enables operation either in modulating heating mode, or on/off mode

- **B1** reserved
- **B2** reserved
- **B3** allows the hot water flow switch timing to be adjusted to 0 or 1.5 seconds
- **B4** reserved

Note: after a power cut-out or board reset, the **HAT** is cancelled for 3 minutes.

- **P1**: potentiometer to range rate the Central heating output (see table on page 26)
- **P2**: potentiometer enabling soft-light ignition (factory set at: 12.7 kW - MX2 24 FF and 16 kW - MX2 30 FF)
- **P3**: reserved

Once adjustments have been made, replace the blanking cover **E** (Fig. 30), close the control unit cover and refit the casing.

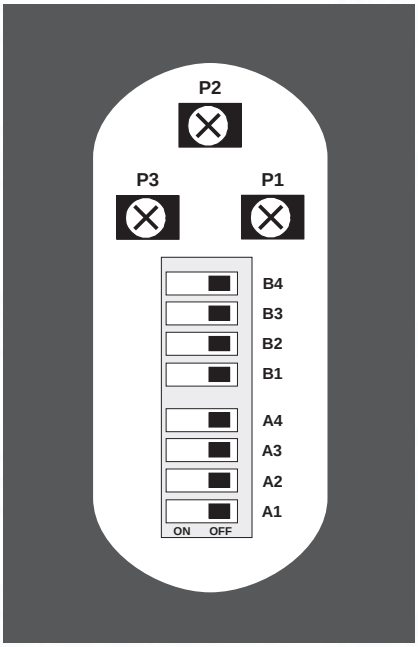

Factory setting

ON	OFF
Domestic hot water flow switch time 1.5 sec.	Domestic hot water flow switch time 0 sec.
On/Off operation	Modulating operation
Heating setting 40 °C	Variable heating setting between 35 to 85°C
Anti-cycle 30 secs	Anti-cycle 3 min

Fig. 33

Burner gas output setting

The values shown in the tables below are given for information purposes for a nominal gas distribution pressure, to allow any adjustments to the water heater heating output according to the requirements of the system.
They cannot be used to calculate the precise regulated output of the boiler.

MX2 24

Gas :	**G20**	**PROPANE**	**BUTANE**
Power (kW)	**Burner** Pressure (mbar)	Burner Pressure (mbar)	Burner Pressure (mbar)
10	1.8	6.7	4.7
12.7	3.3	11.1	8.1
16	5.3	17.2	12.9
20	8.2	25.8	19.5
24	11.4	35.2	26.8

MX2 30

Gas :	**G20**	**PROPANE**	**BUTANE**
Power (kW)	Burner Pressure (mbar)	Burner Pressure (mbar)	Burner Pressure (mbar)
12	1.5	5.8	4.1
16	3.5	10.7	7.8
20	5.9	16.7	12.4
25	9.3	25.6	19.0
30	13.0	35.9	26.5

16 Fitting the Casing

Fitting the casing

Remove the protective film on the casing:

- offer the casing up (Fig. 34)
- engage hooks **N** on the casing in notches **R** (operation **1)**
- fit the top of the panel in place
- close the panel mounting clamps (Fig. 35)
- screw in the clamp locking bolt **A**

Note: it is essential to refit the locking bolt A

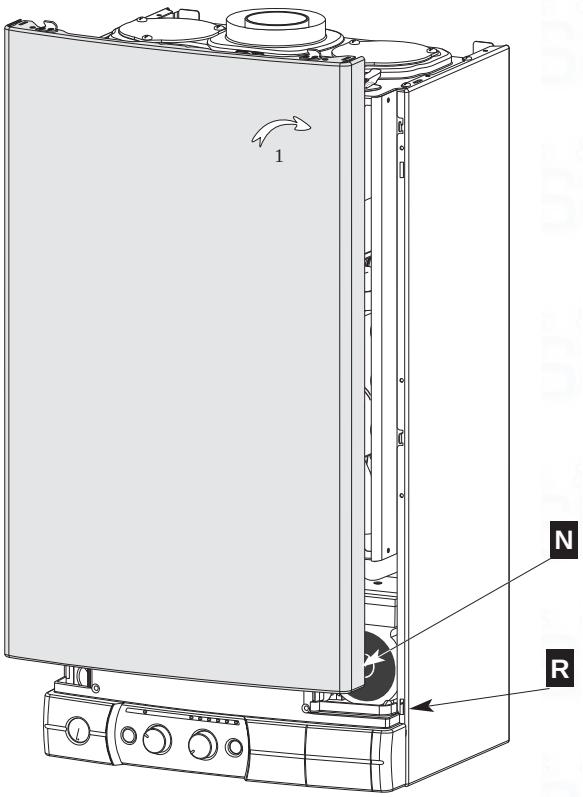

Fig. 34

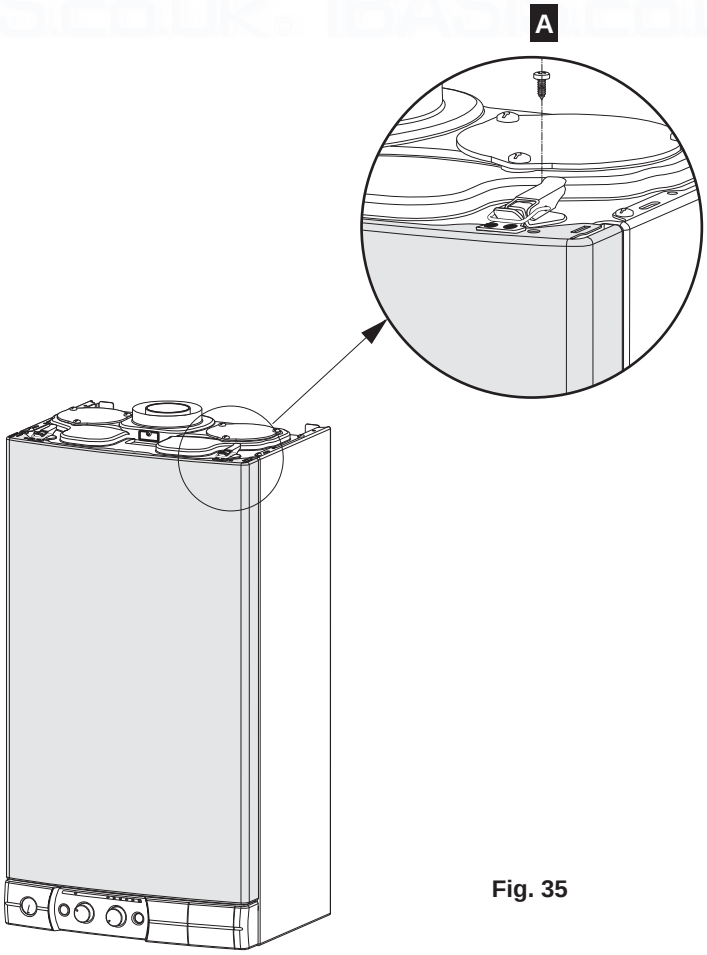

Fig. 35

17 Completion

For the Republic of Ireland it is necessary to complete a “Declaration of Conformity” to indicate compliance to I.S. 813. An example of this is given in the current edtion of I.S. 813. In addition to this it is necessary to complete the benchmark Log Book.

18 Operational Checks

1. The flue system must be visibly checked for soundness.
2. On Central Heating allow the system to warm up and manipulate the Central Heating temperature control knob, check the burner modulates up and down between the high and low settings.
3. Range rate the thermal power for Central Heating, as detailed in **Section 20 (Setting the gas pressures)**.
4. Run the Domestic Hot Water, manipulate the Domestic Hot Water temperature control knob to check the burner modulates up and down between the high and low settings. Regulate the hot water flow rate to achieve the desired temperature rise.
5. Balance the Central Heating system until all return temperatures are correct and equal.
6. Turn the ON/OFF button OFF, disconnect the pressure Gauge, retighten screw and relight boiler.
7. Re-examine Central Heating, Domestic Hot Water and Cold Water supplies for soundness.
8. Check the appearance of the gas flame to assess the adequacy of the combustion air supply.
9. If external controls have been disconnected, reconnect and test.
10. Refit boiler casing.

19 Instructing the End User

1. Hand over this copy of the Installation, Servicing and Operating instructions supplied with the appliance, and explain how to use the timeclock and room thermostat if fitted.
2. Show the End User how to switch the appliance off quickly, and indicate the position of the electric supply isolator.
3. Inform the End User of the location of all drains, isolating valves and air vents.
4. Explain how to turn the appliance off for both short and long periods and advise on the precautions necessary to prevent damage in the event that the appliance is inoperative when freezing conditions occur.
5. Finally advise the End User that, for continued safe and efficient operation, the appliance must be serviced by a competent person at least once a year.

20 Setting the Gas Pressures / Gas Type Conversion

When adapting to a gas different from the one for which the boiler is equipped, you should replace the parts delivered with the conversion kit, and make the gas valve adjustments as described below:

Fig. 36

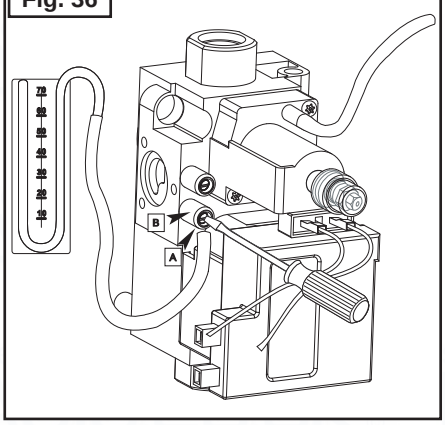

Fig. 37

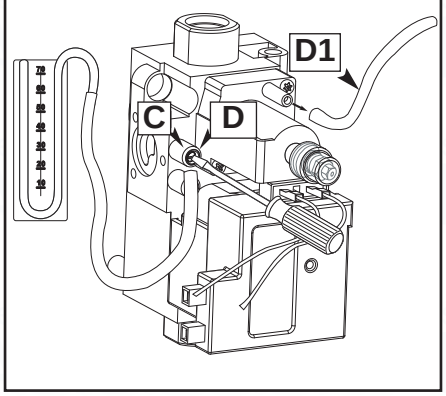

Fig. 38

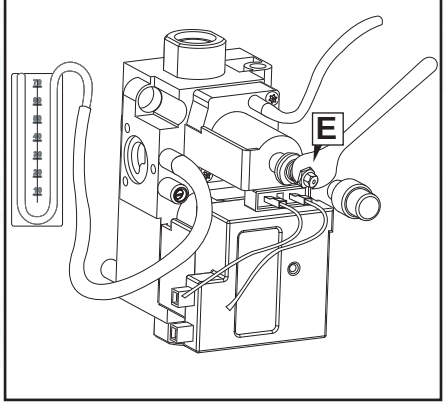

Fig. 39

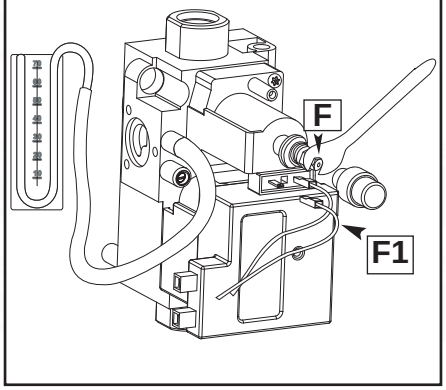

Setting the minimum and the maximum power of the boiler
Check that the supply pressure and dynamic pressure to the gas valve is a minimum of 20 mbar for natural gas. To do this, loosen the screw **"A"**.
Fit the pipe of the pressure gauge to the inlet pressure connection of the gas valve **"B"** check for the correct standing pressure, then operate the appliance and check for the correct working pressure.
When you have completed this operation, replace the screw **"A"** securely into its housing to seal off the gas (check for tightness).
To check the pressure supplied by the gas valve to the burner, loosen the screw **"C"**. Fit the pipe of the pressure gauge to the pressure outlet test point of the gas valve **"D"**.
Disconnect the compensation pipe **"D1"** either from the gas valve or from the sealed chamber.
Turn the boiler on, and ensure that the hot water temperature control knob is set to maximum. Turn on the boiler by running a hot water tap.
Adjust the 10mm nut **"E"** on the modureg to set the maximum gas pressure, turn the nut clockwise to increase and anti clockwise to decrease the pressure until the required pressure is achieved (see **Maximum Burner Pressure Table** page 30).
To set the minimum power, disconnect a supply terminal **"F1"** from the modureg and adjust screw **"F"** (ensure the 10mm nut is held in position). Turn the screw clockwise to increase the gas pressure and counter-clockwise to decrease the gas pressure (displayed on the pressure gauge) corresponding to the minimum power (see **Minimum Burner Pressure Table** page 30).
When you have completed the above operations, turn off the hot water tap, re-connect the supply terminal to the modureg on the gas valve and replace the cap on the screw of the modureg.

Setting the maximum heating circuit power
To set the maximum heating circuit power, turn the boiler on and turn the Central Heating temperature control knob to maximum, ensuring all extermal controls are calling for heat.
Remove the inspection panel of the P.C.B. and fit a small cross-head screwdriver in to the right hand potentiometer (see page 26). Turn clockwise to increase the pressure or counter-clockwise to reduce the pressure. Adjust the setting to the required heating pressure value (displayed on the pressure gauge), as indicated in the tables shown on page 30.
Turn off the boiler by placing the main switch to the "OFF" position.

Note : when adjusting the minimum output in G30/G31 on 24 FF boilers, you should place the metal plate supplied with the boiler and the gas changing kit on the manifold. (Fig. 40 page 30)
Important: do not forget to remove this plate once the adjustment has been completed. (the tab prevents the boiler from being reassembled).

Adjusting the ignition output
The potentiometer P2 (Fig. 33) on the PCB permits this adjustment (12.7 kW - MX2 24 FF and 16 kW - MX2 30 FF) (**see Settings on page 25**).
Disconnect the detection electrode **(see section 22.2.3 - Fig. 50)**.
Start the boiler and during the ignition sequence adjust the left hand potentiometer until the gas pressure reads the required gas pressure as per the table below.
Once the gas pressure is set turn off the boiler and re-connect the detection electrode.
NB.: It may be necessary to reset the flame failure reset a number of times during this operation.

Remove the pipe from the test point and tighten the screw "**C**" to the pressure test point in order to seal off the gas. Carefully check the pressure test points for gas leaks (valve inlet and outlet), reconnect the compensation pipe **D1**.

IMPORTANT!
Whenever you disassemble and reassemble the gas connections, always check for leaks using a leak detection fluid.

Note: always check the gas rates following adjustment.

20 Setting the Gas Pressures (continued)

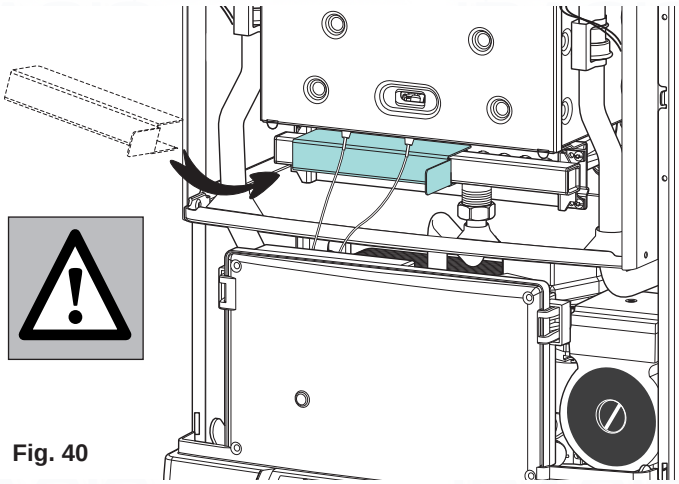

Fig. 40

Maximum Burner Pressure (mbar)

mbar	G 20	G 30	G 31
24 kW FF	11.4	26.8	35.2
30 kW FF	13	26.5	35.9

Minimum Burner Pressure (mbar)

mbar	G 20	G 30	G 31
24 kW FF	1.8	4.7	6.7
30 kW FF	1.5	4.1	5.8

21 Particular Characteristics

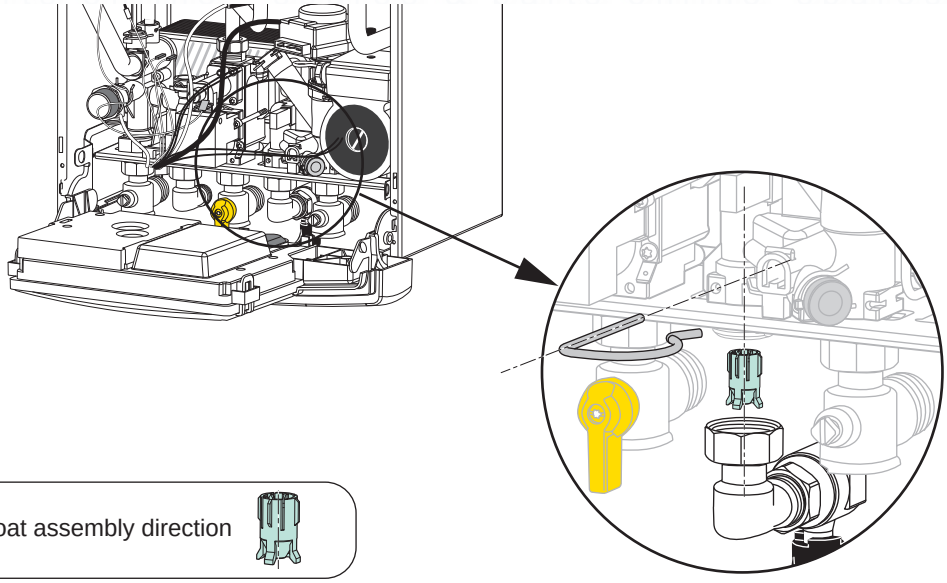

Flow switch float assembly direction

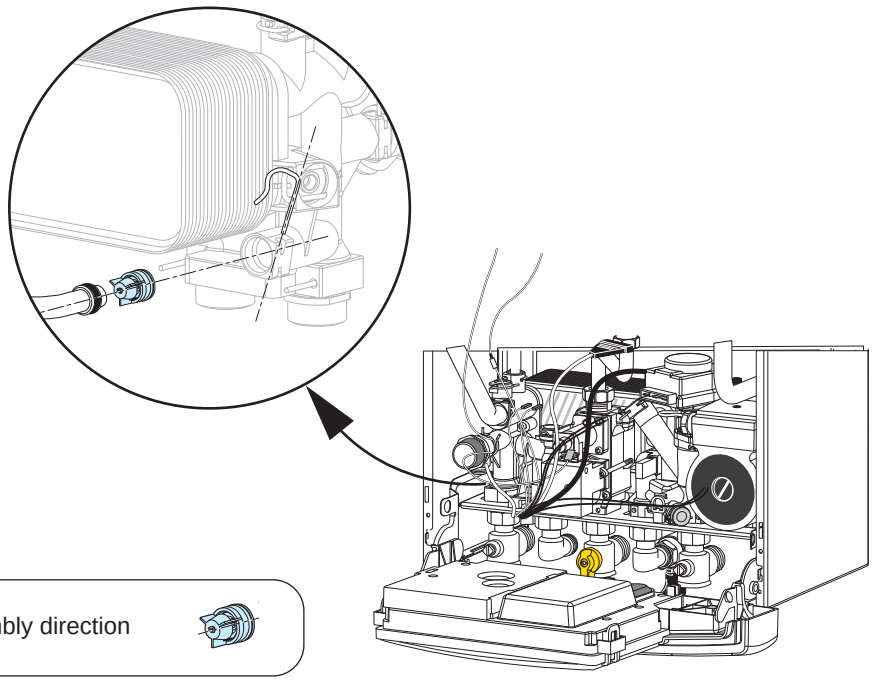

By-pass valve assembly direction

To ensure efficient safe operation, it is recommended that the boiler is serviced annually by a competent person.

Before starting any servicing work, ensure both the gas and electrical supplies to the boiler are isolated and the boiler is cool.
Before and after servicing, a combustion analysis should be made via the flue sampling point.

After servicing, preliminary electrical system checks must be carried out to ensure electrical safety (i.e. polarity, earth continuity, resistance to earth and short circuit).

22 Replacement of Parts

The life of individual components vary and they will need servicing or replacing as and when faults develop.
The fault finding sequence chart in **Section 24** will help to locate which component is the cause of any malfunction, and instructions for removal, inspection and replacement of the individual parts are given in the following pages.

22.1 To Gain General Access

All testing and maintenance operations on the boiler require the control panel to be lowered. This will also require the removal of the casing.

22.1.1 Removing the front panel :

1. Unlock the two clamps locking **A** *(see Figs. 41 & 42)*;
2. Remove the front panel from the rest of the casing *(see Fig. 43)*.

22.1.2 Removing the side panels :

1. Remove the front panel;
2. Remove the screws **B** lift toward at the base and then lift off the locating lugs *(see Fig. 44)*.

22.1.3 Lowering the control panel :

1. Remove the front panel;
2. Unlock the two clamps locking and pivot the electrical box downward *(see Fig. 45)*.

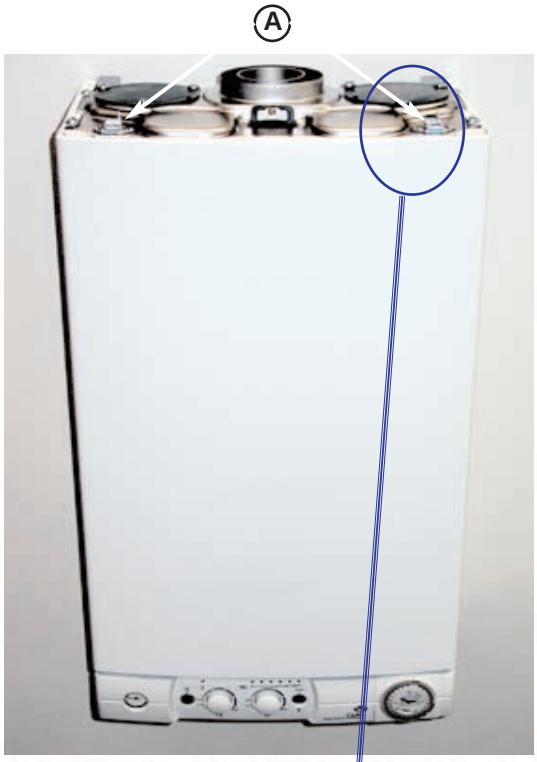

Fig. 41

Fig. 42

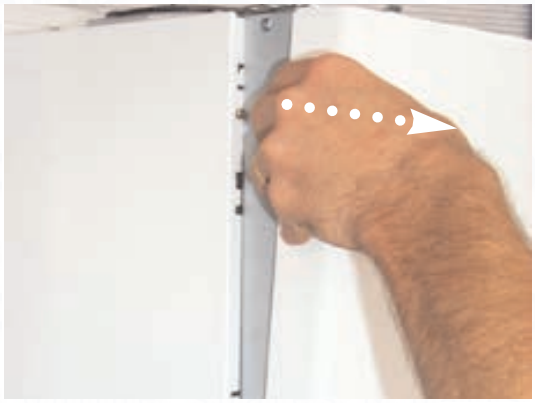
Fig. 43

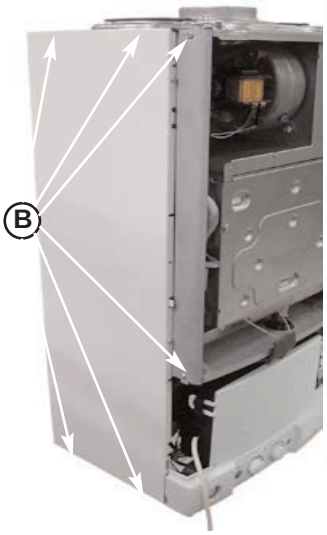

Fig. 44

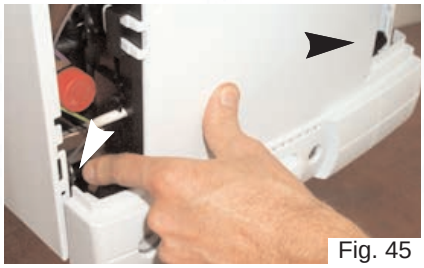
Fig. 45

22.2 Access to the Combustion Chamber

22.2.1 Removing the combustion chamber front panel

1. Carry out step ***22.1.1***;
2. Unscrew five self tapping screws "**D**" to release the combustion chamber front panel and lift clear *(for the 24kW see Fig. 46a, for the 30kW see Fig. 46b)*;
3. Reassemble in reverse order.

22.2.2 Removing the burner manifold

1. Carry out step ***22.1.1 and 22.2.1***;
2. Unscrew the nut between manifold and gas pipe *(see Fig. 47)*.
3. Unscrew the 4 screws "**E**" securing the burner and lift clear *(see Fig. 48)*.
4. Reassemble in reverse order

24 kW

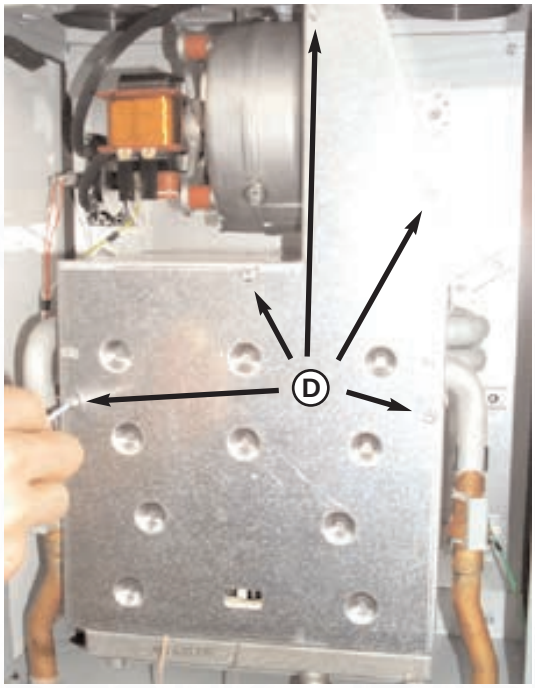

Fig. 46a

30 kW

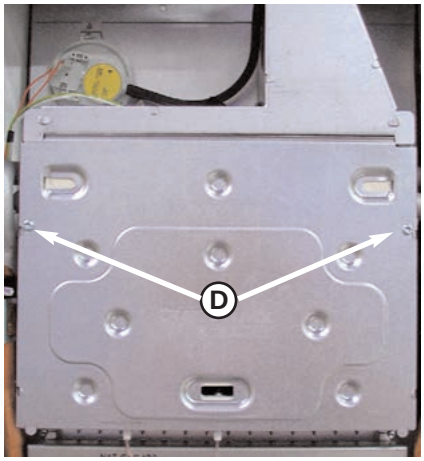

Fig. 46b

Fig. 46c

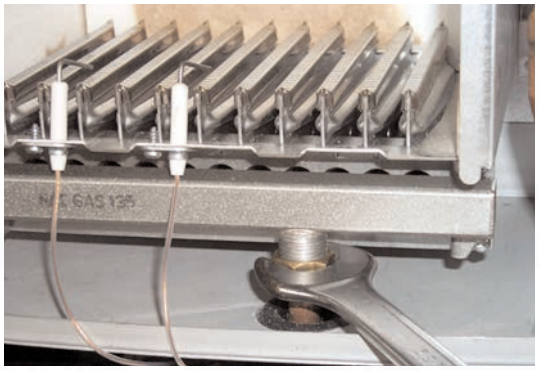

Fig. 47

Fig. 48

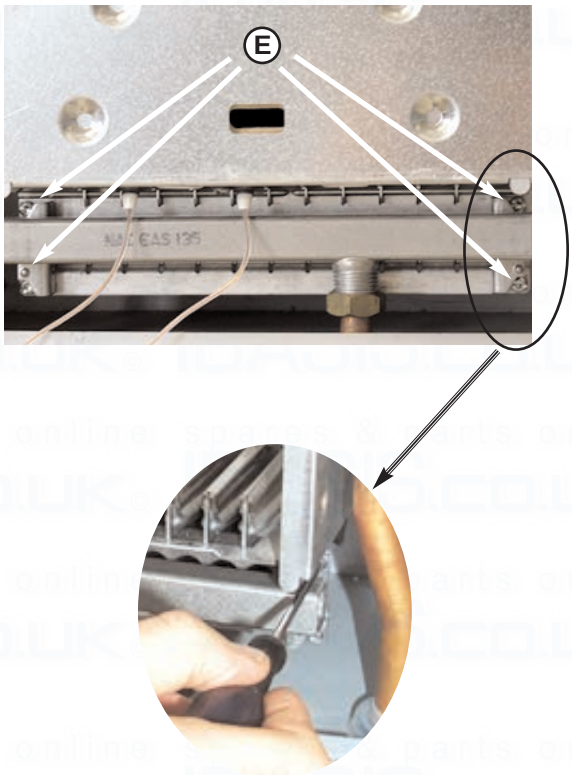

22.2.3 Removing the electrodes

1. Carry out steps ***22.1.1*** and ***22.2.1***;
2. Unscrew the self tapping screws *(see Fig. 49)*;
3. Disconnect the lead from the wiring loom *(see Fig. 50)*;
4. Remove the electrodes *(see Fig. 51)*;
5. Reassemble in reverse order.

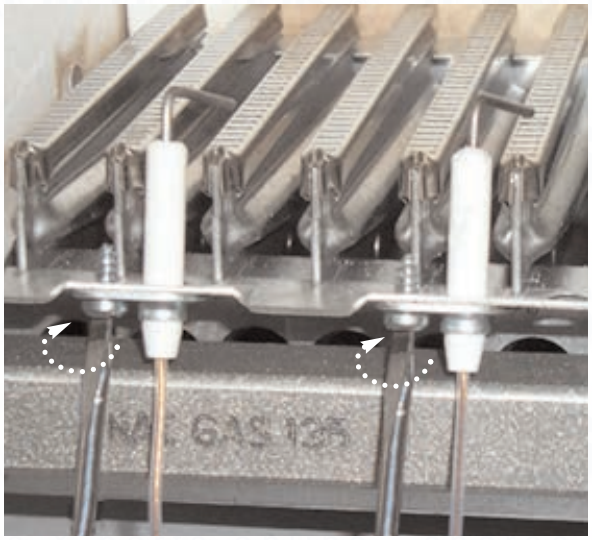

Fig. 49

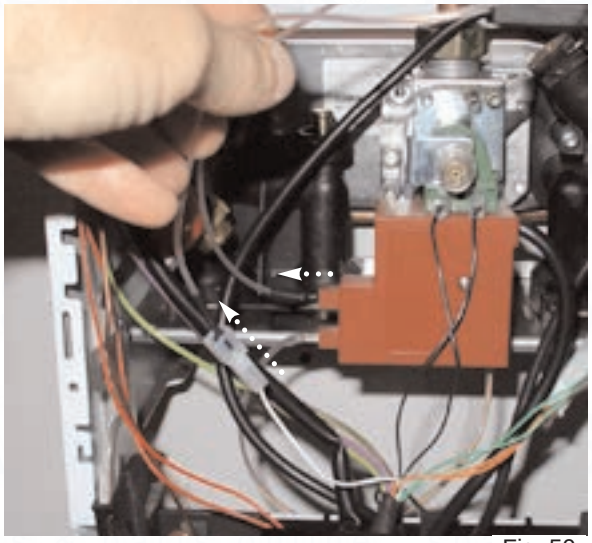

Fig. 50

Fig. 51

22.2.4 Removing the burner

1. Carry out steps ***22.2.1***, ***22.2.1*** and ***22.2.2***;
2. Remove the two self tapping screws "**F**" securing the burner *(see Fig. 48);*
3. Pull the burner out of the combustion chamber *(see Fig. 53)*;
4. Remove the self tapping screws securing the electrodes *(see Fig. 54)*
5. Reassemble in reverse order;
6. Carry out combustion tests using the test point on the turret

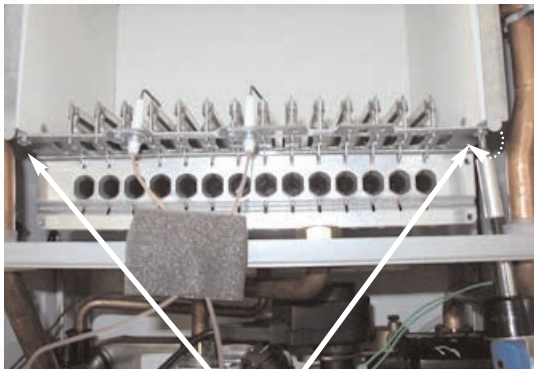

Fig. 52

F

Fig. 53

Fig. 54

22.2.5 Removing the main heat exchanger

1. Carry out step ***22.1.1***, ***22.2.1*** and ***22.2.2;***
2. Drain the boiler (only heating circuit);
3. Remove the 2 front clips "**G**" securing the heat exchanger *(see Fig. 55)*;
4. Remove the NTC clips and overheat clip *(see Fig. 56)*;
5. Unscrew the nut "**H**" from the pump *(see Fig. 57)*;
6. Remove the clip "**C**" from the left side hydraulic bloc, pull the 2 pipes downward *(see Figs. 58 & 59)*;
7. Pull the heat exchanger toward you to remove *(see fig. 60) ;*
8. Reassemble in reverse order, do not forget to grease o rings before reassembly.

To replace insulation pads carry out the above procedure .
To remove the pads bend down the retaining clip and retract the pads.
Reassemble in reverse order.

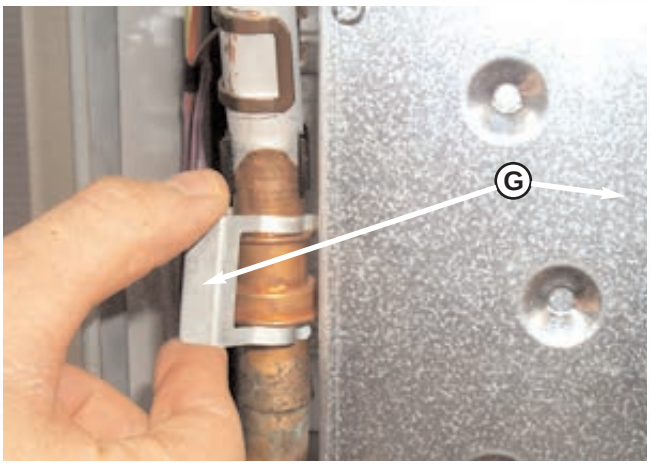

Fig. 55

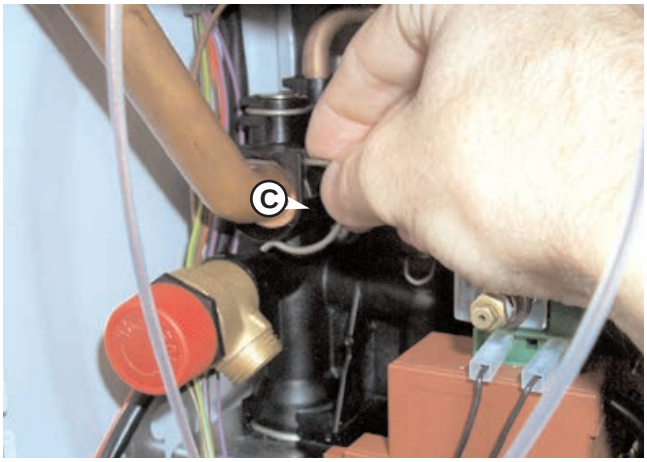

Fig. 58

Fig. 56

Fig. 59

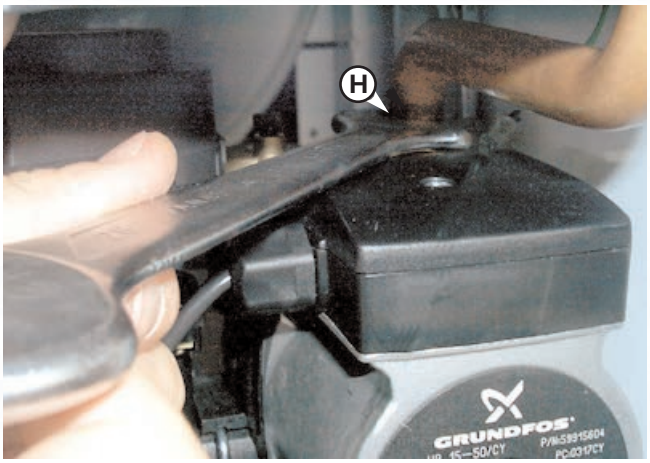

Fig. 57

Fig. 60

22.2.6 Removing the air pressure switch

1. Carry out step ***22.1.1***;
2. Disconnect the wire connectors *(see Fig. 61)*;
3. Disconnect the pressure pipes noting positions *(see Fig. 62 or Fig 63)*;
4. Remove the screw securing the pressure switch to the chassis *(see Fig. 64)*;
5 Reassemble in reverse order ensuring that the wiring is reconnected.

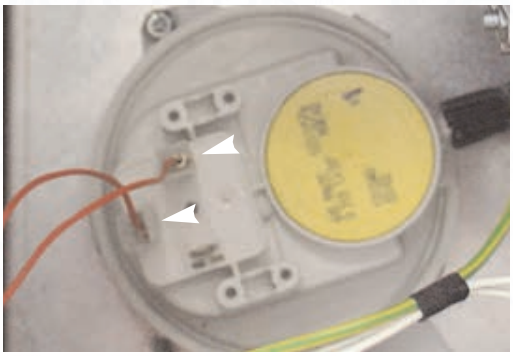

Fig. 61

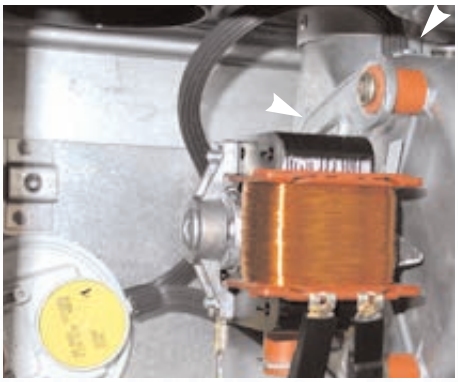

Fig. 62

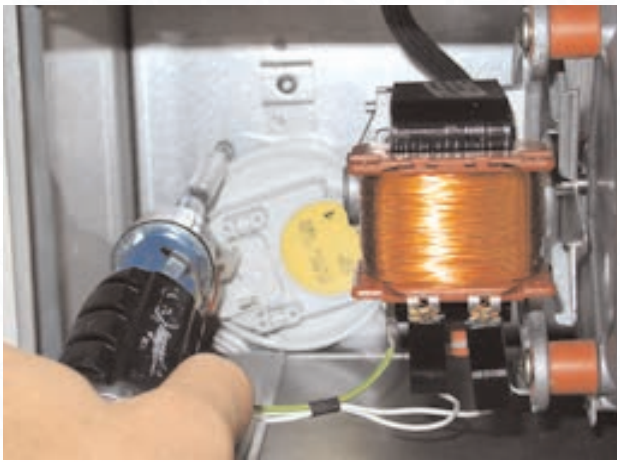

Fig. 63

22.2.7 Removing the fan

1. Carry out step ***22.1.1***;
2. Disconnect the wire connectors *(see Fig. 64)*;
3. Remove the screw fixing the fan to the flue outlet *(see Fig. 65)*;
4. Turn the fan anticlockwise to disengage from flue outlet and lift clear *(see Fig. 66)*;
5. Disconnect the pressure pipes noting positions *(see Fig. 67)*;
6. Reassemble in reverse order ensuring that the wiring is reconnected correctly and the screw tightened.

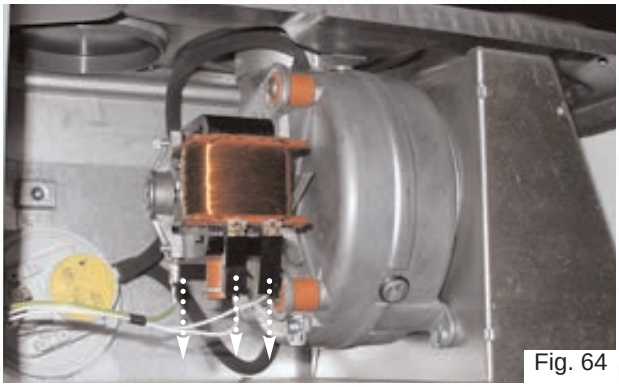

Fig. 64

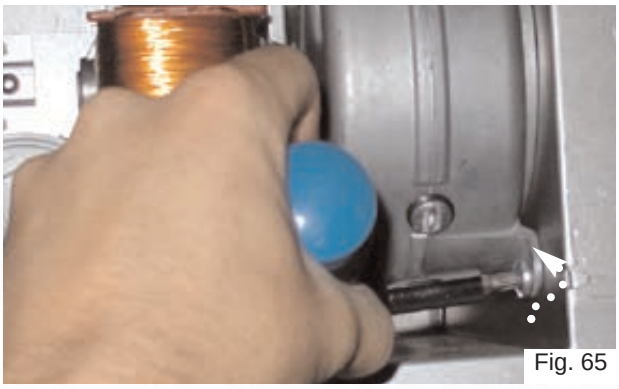

Fig. 65

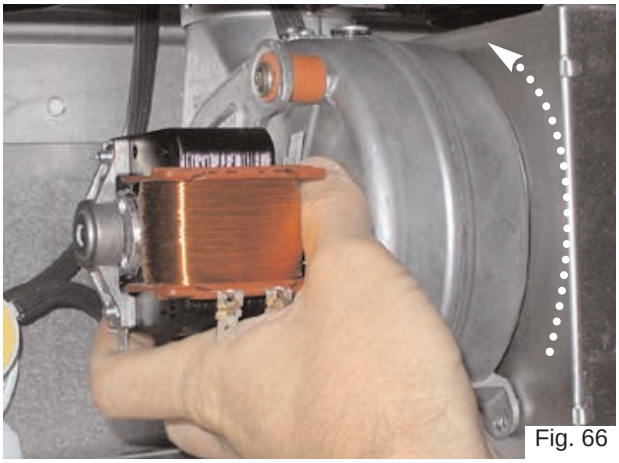

Fig. 66

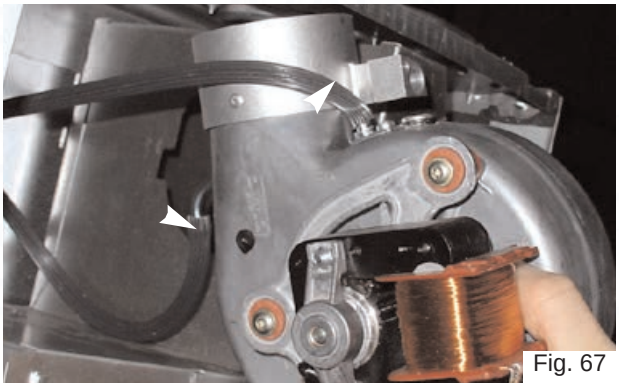

Fig. 67

22.3 Servicing and Removal of the Gas Valve

22.3.1 Removing the spark generator

1. Carry out steps ***22.1.1*** and ***22.1.3***;
2. Disconnect ignition leads "**I**" by pulling left *(see Fig. 68)*;
3. Remove the two screws "**J**" of the electrical box *(see Fig. 69)* and disconnect the electrical connections "**K**" *(see Fig. 70)*;
4. Remove the screw "**L**" on the spark generator *(see Fig. 68)*;
5. Remove the spark generator by pulling forwards *(see Fig. 71).*

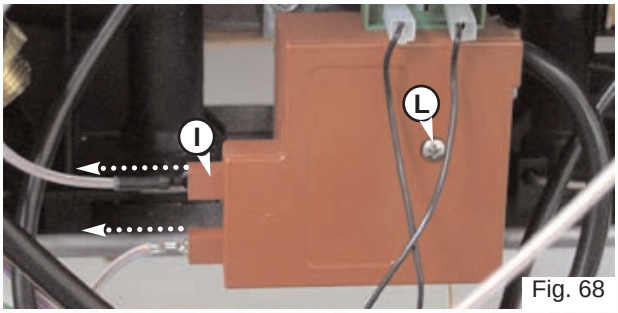

Fig. 68

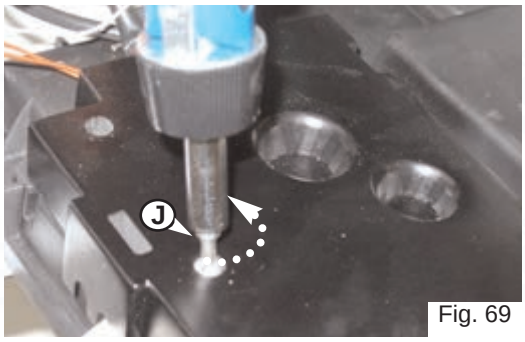

Fig. 69

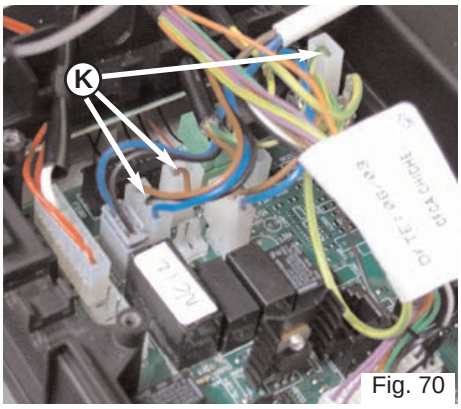

Fig. 70

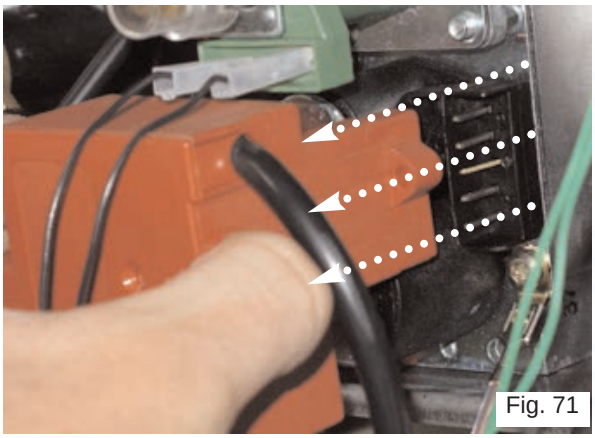
Fig. 71

22.3.2 Removing the gas valve

IMPORTANT! Ensure the gas supply to boiler is turned off.

1. Carry out step ***22.1.1*** and ***22.1.3***;
2. Disconnect the wires from the main modulator coil "**M**"*(see Fig. 72)*
3. Disconnect the electrode wires and remove the spark generator as in step ***22.3.1***;
4. Undo the gas pipe nut "**N**" (30mm spanner) and the two screws "**O**" securing the gas valve to the bottom plate, and remove the electrode wire *(see fig. 73)*;
5. Reassemble in reverse order replacing the gasket.

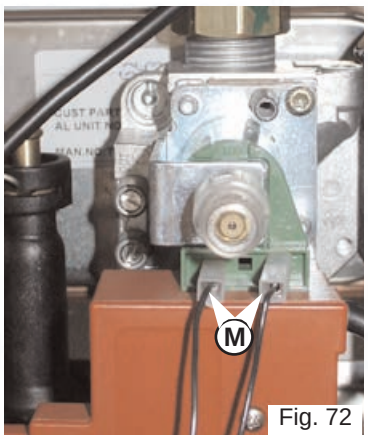

Fig. 72

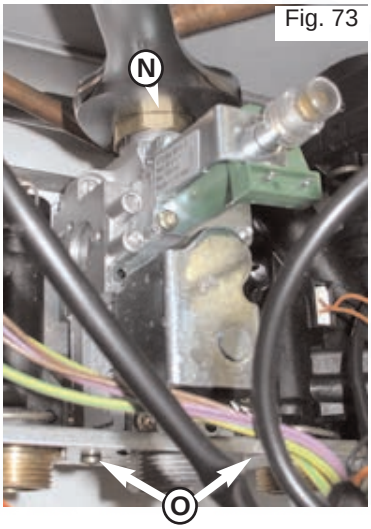

Fig. 73

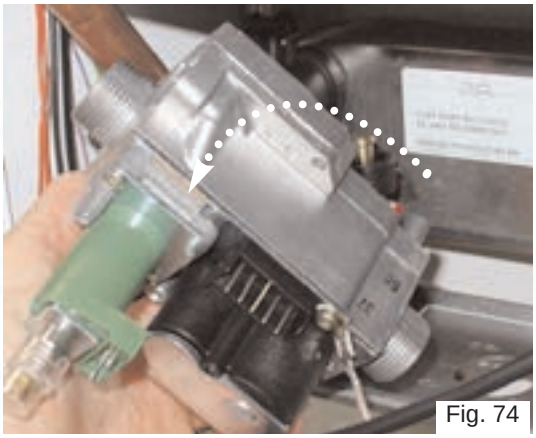
Fig. 74

22.4 Access to the Water Circuit

Important! **Before any component is removed, the boiler must be drained of all water.**

22.4.1 Drain down

DHW : close the DHW inlet tap and open a tap on the installation / **CH** : Close the flow and return isolating valve and open the pressure relief valve.

22.4.2 Removing the 3 way valve

1. Carry out step ***22.1.1*** and ***22.1.3***;
2. Disconnect the wire from the 3 way valve *(see Fig. 75)*;
3. Remove the clip "**P2**" and the 3 way valve motor *(see Fig. 76)*;
4. Unscrew the two screws "**P3**" and the 4 clips "**Q1 *** to **Q4**" *(see Figs. 77 to 80)*;
5. Remove the 3 way valve body pulling it toward you *(see Fig. 81)*;
6. Reassemble in reverse order;

* **See the paragraph 19.4.1 before removing the clips.**

Fig. 76

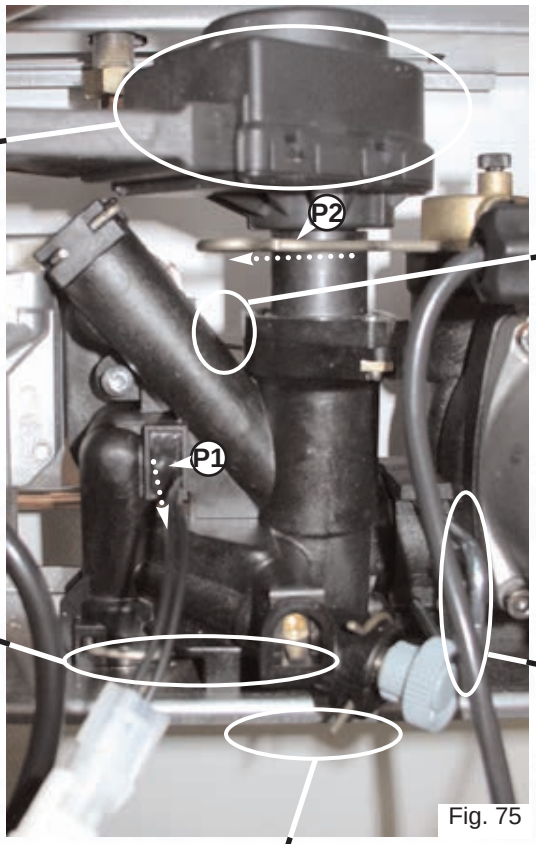

Fig. 75

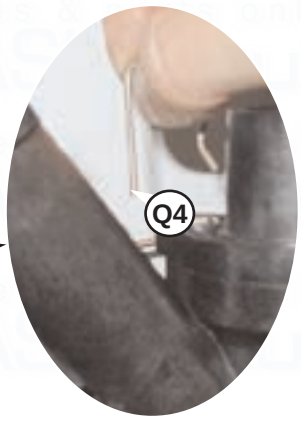

Fig. 80

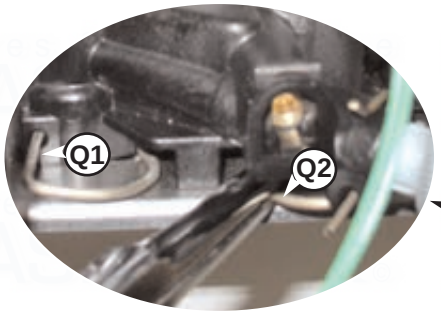

Fig. 77

Fig. 79

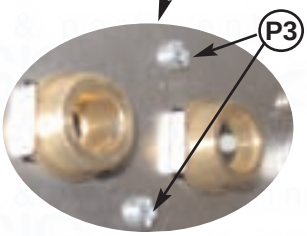

Fig. 78

Fig. 81

22.4.3 Removing the float of the flow switch

1. Remove the clip "**Q1**" fixing the brass connector *(see Fig. 77)*;
2. Pull down the brass connector and catch simultaneously the float *(see Figs. 82 & 83);*
3. Reassemble in reverse order;

Fig. 82

Fig. 83

22.4.4 Removing the pressure relief valve

1. Carry out step ***22.1.1*** and ***22.1.3***;
2. Remove the clip securing the valve *(see Fig. 84)* and pull it toward you;
3. Reassemble in reverse order; take care to ensure the valve is in the correct position;

Fig. 84

22.4.5 Removing the secondary heat exchanger

1. Carry out step ***22.1.1*** and ***22.1.3***;
2. Remove the 3 way valve motor as in step ***22.4.2***;
3. Disconnect the expansion vessel pipe.
3. Unscrew the two fixing screws "**R**" and pull it toward you *(see Figs. 85 & 86a)*;);
4. Reassemble in reverse order;
   The heat exchanger is so designed that it cannot be remounted incorrectly;

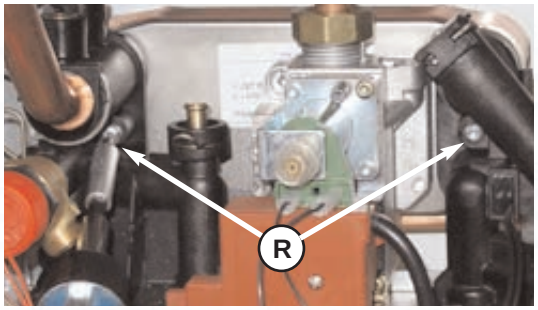

Fig. 85

Fig. 86a

22.4.6 Removing the pump

1. Carry out step ***22.1.1***;
2. Lower the electrical box cover as in step ***22.1.3***
3. Remove the pump plug from the control board and earth plug from earth socket *(see Fig. 87);*
4. Unscrew the pump nut *(see Fig. 88);*
5. Unscrew the screw "**S1**" and remove the clip "**S2**" on the pump volute *(see Fig. 89);*
6. Pull the pump toward you and remove the clip "**S3**" securing the pressure gauge *(see Fig. 90);*
7. Reassemble in reverse order.

Fig. 87

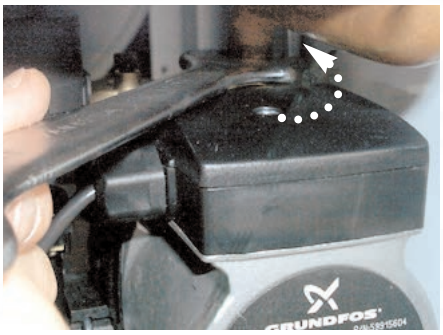

Fig. 88

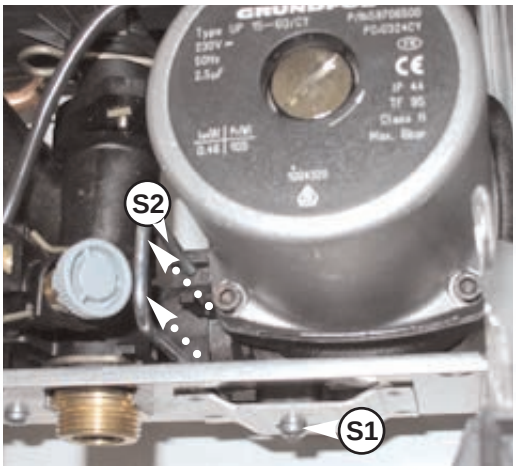

Fig. 89

Fig. 90

22.4.7 Removing the domestic expansion vessel

1. Remove the boiler from the wall
2. Remove the two screws "**T**" *(see Fig. 91)*;
3. Unscrew the nut "**U**" *(see Fig. 92)*;
4. Pull the expansion vessel toward you to remove it;
5. Reassemble in reverse order.

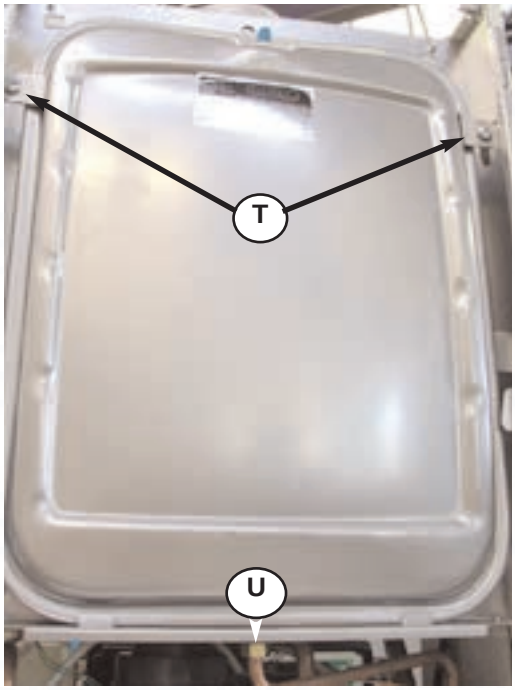

Fig. 91

Fig. 92

22.4.8 Removing the overheat thermostat

1. Remove the casing as in step **22.1.1** ;
2. Pull off the thermostat connections. Then remove the thermostat from the pipe by releasing it's securing clip *(see Fig. 93)*.

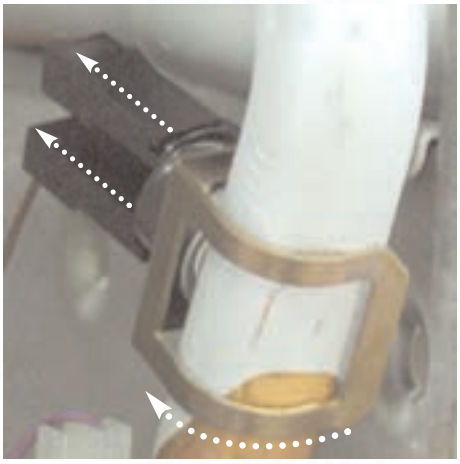

Fig. 93

22.4.9 Removing the heating temperature sensor (N.T.C.)

1. Remove the casing as in step **22.1.1** ;
2. Pull off the NTC connections. Then remove the NTC from the pipe by releasing it's securing clip *(see Fig. 94)*.

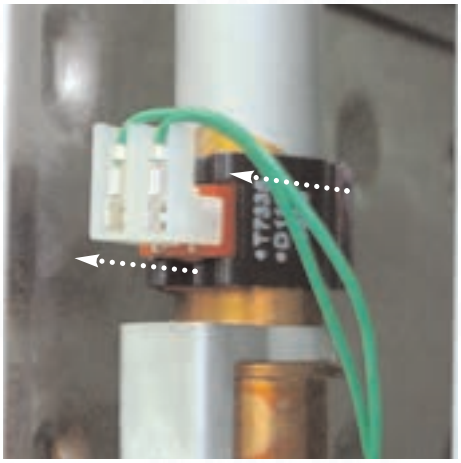

Fig. 94

22.5 Access to the Control System

22.5.1 Removing the P.C.B.s

1. Isolate electricity;
2. Carry out step ***22.1.1***;
3. Pivot the electrical box downward as step ***22.1.3***;
4. Remove the two screws "**V1**" *(see Fig. 95)*;
5. Pivot the electrical box to its original position;
6. Remove the two screws "**V2**" and pull toward you unlocking the two clamps "**V3**" *(see Fig. 96 & 97)*;
7. Remove the two screws "**V4**" (see Fig. 98) on the PCB, unplug the electrical connections
8. To remove it pull the PCB towards you;
9. Reassemble in reverse order.

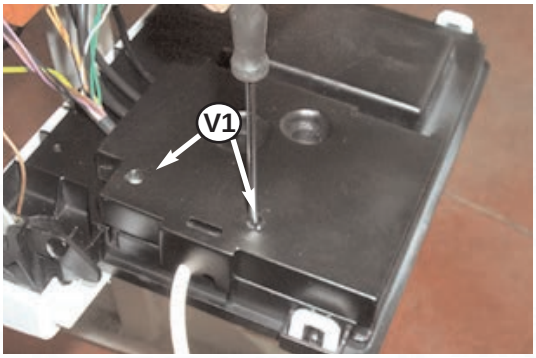

Fig. 95

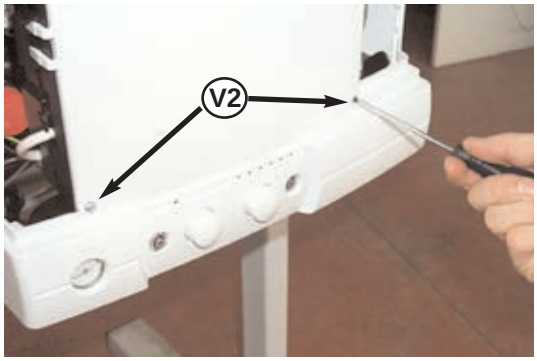

Fig. 96

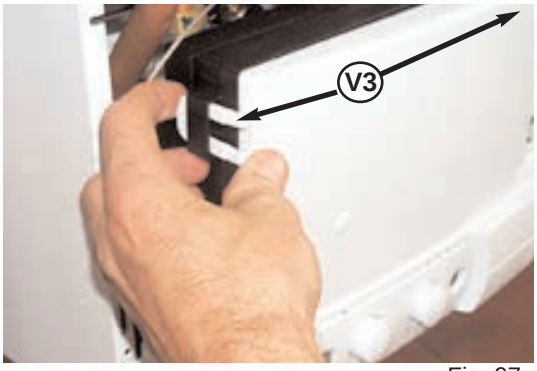

Fig. 97

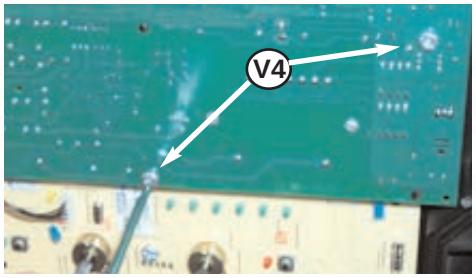

Fig. 98

22.5.2 Removing the fuses

1. Carry out steps ***22.5.1*** ;
2. Remove the fuses "**X**" *(see Fig. 99)*
3. Reassemble in reverse order.

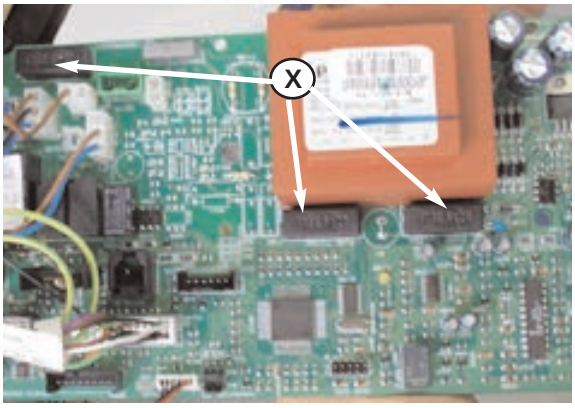

Fig. 99

23 Incorrect Operation

If a fault occurs in the appliance, one or more LEDs (23 Fig. 1) flash according to the fault type listed in the table below.

CODE						FAULT	INFORMATION
30	40	50	60	70	80		
❍	❍	❍	❍	❍	●	Overheating safety feature.	
❍	❍	❍	❍	●	●	No flame detection.	
❍	❍	❍	●	❍	●		Antifrost mode on (pump in operation).
❍	❍	❍	●	●	❍		Antifrost mode on (burner and pump in operation).
❍	❍	❍	●	●	●	lack of water circulation.	
❍	❍	●	❍	❍	❍	Primary water circulation defect	
❍	❍	●	❍	●	●	Central heating return thermistor faulty (open circuit).	
❍	❍	●	●	❍	❍	Central heating return thermistor faulty (short circuit).	
❍	❍	●	●	❍	●	Central heating flow thermistor faulty (open circuit).	
❍	❍	●	●	●	❍	Central heating flow thermistor faulty (short circuit).	
❍	●	❍	❍	●	❍		Firing problem
❍	●	❍	●	❍	❍	Wiring problem (or fuse 1.25 A)	
❍	●	❍	●	❍	●	Fan on but does not activate air pressure switch.	
❍	●	❍	●	●	❍	Fan off but air pressure switch fails to return to off position.	
❍	●	●	●	●	●	Communication defect with the display PCB.	
●	❍	❍	❍	❍	❍	Communication defect with the main PCB.	

❍ = **LED off**

● = **LED blinking**

Fault	Cause	Solution
The boiler doesn't start	No gas, no water or no electricity	Check gas, water and electrical supply, fuses…
	Air in the gas pipe	Purge the gas supply
		Turn up the room thermostat
Red indicator alight	Room thermostat switched off	Wait for a few minutes Press the reset button **25** (fig. 7) the red led will go out and the boiler attempts to re-light. If the red indicator lights too frequently, please call your local service centre.
Noises in CH system	Air presence in CH system or. Insufficient pressure	Purge the system of air and increase the system pressure (chapter 7)
Radiators rise in temperature during summer time.	Gravity effect in the CH system	Close the heating flow isolating valve. Don't forget to open it again when the heating is restarted.

If these solutions do not cure the fault, call a qualified professional

24 Fault Finding

24.1 Fault finding guide (flow-chart)

It is possible to detect and correct defects by using the standard fault finding diagrams described in this chapter.

NOTE: THIS FAULT FINDING GUIDE IS NOT EXHAUSTIVE.

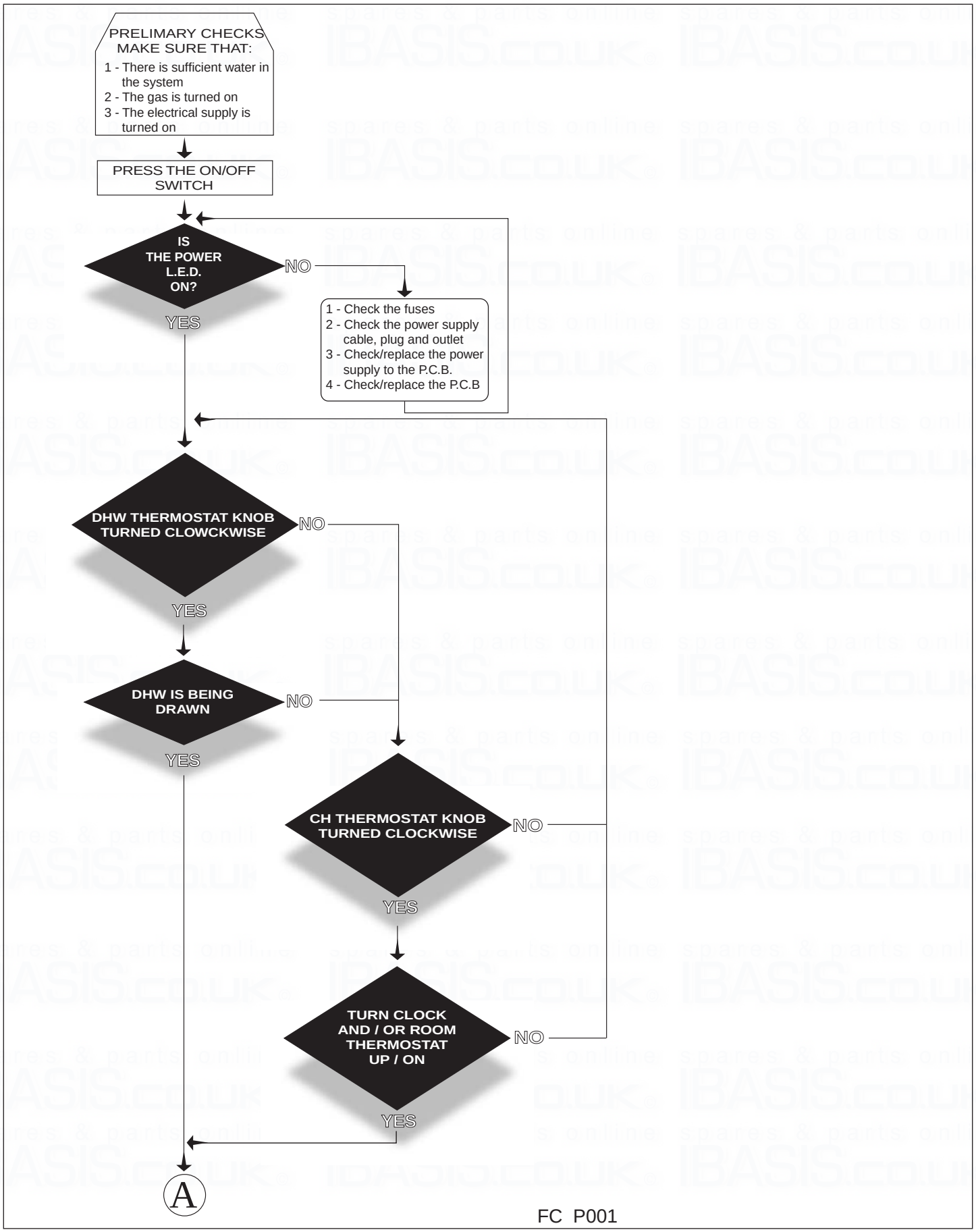

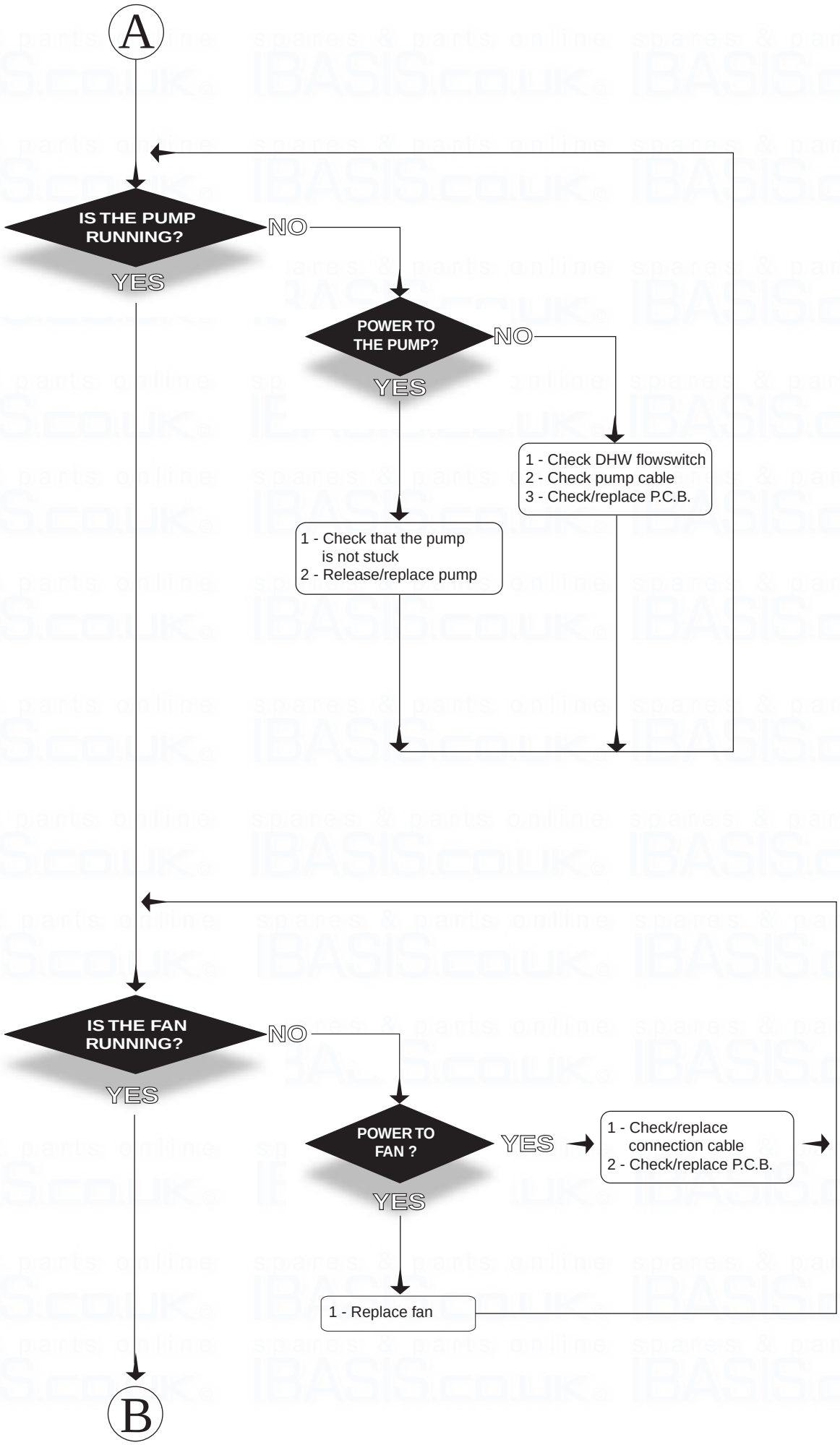
A
IS THE PUMP RUNNING?
NO
YES
POWER TO THE PUMP?
NO
YES
1 - Check DHW flowswitch
2 - Check pump cable
3 - Check/replace P.C.B.
1 - Check that the pump is not stuck
2 - Release/replace pump
IS THE FAN RUNNING?
NO
YES
POWER TO FAN ?
YES
YES
1 - Check/replace connection cable
2 - Check/replace P.C.B.
1 - Replace fan
B

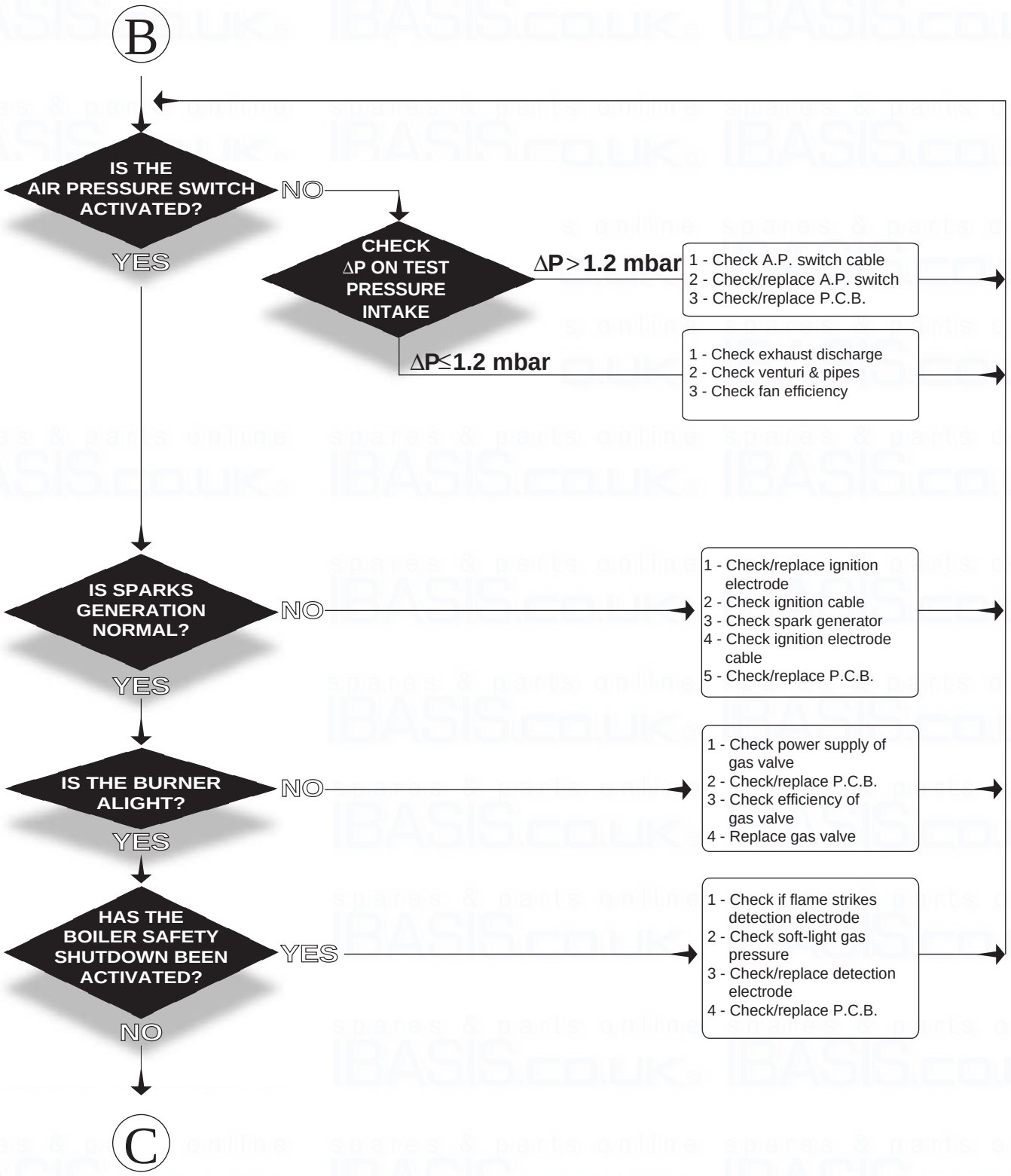
B
IS THE AIR PRESSURE SWITCH ACTIVATED?
NO
YES
CHECK ΔP ON TEST PRESSURE INTAKE
ΔP > 1.2 mbar
1 - Check A.P. switch cable
2 - Check/replace A.P. switch
3 - Check/replace P.C.B.
ΔP ≤ 1.2 mbar
1 - Check exhaust discharge
2 - Check venturi & pipes
3 - Check fan efficiency
IS SPARKS GENERATION NORMAL?
NO
YES
1 - Check/replace ignition electrode
2 - Check ignition cable
3 - Check spark generator
4 - Check ignition electrode cable
5 - Check/replace P.C.B.
IS THE BURNER ALIGHT?
NO
YES
1 - Check power supply of gas valve
2 - Check/replace P.C.B.
3 - Check efficiency of gas valve
4 - Replace gas valve
HAS THE BOILER SAFETY SHUTDOWN BEEN ACTIVATED?
YES
NO
1 - Check if flame strikes detection electrode
2 - Check soft-light gas pressure
3 - Check/replace detection electrode
4 - Check/replace P.C.B.
C

FC P003

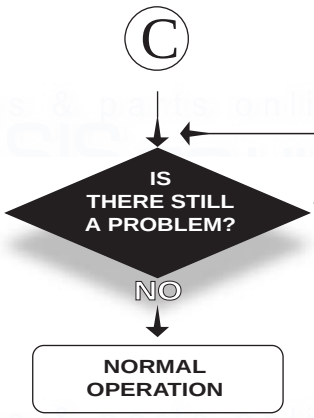

	FAULTS	POSSIBILE CAUSES
1	Drawing D.H.W: When you turn on a tap burner switches off	- air in secondary heat exchanger - faulty D.H.W. flow switch
2	Drawing D.H.W: radiators heat up in summer mode	- faulty 3-way valve / gravity effect (see page 41)
3	Drawing D.H.W: insufficient hot water temperature	- check temperature probes - check gas pressures - check water flow rate - check secondary heat exchanger
4	Drawing D.H.W: noisy operation	- primary heat exchanger faulty or lime-scale deposits - low heating system water pressure - check gas pressures - check temperature probes
5	Decrease/increase heating circuit pressure	- check for leaks on the heating circuit - faulty filling-loop - faulty secondary heat exchanger - expansion vessel faulty
6	Repeated shutdowns	- faulty detection electrodes - check gas settings - check flame detection electric circuit
7	Repeated intervention of safety thermostat	- check temperature probes - overheat thermostat not calibrated correctly - air in primary water circuit
8	When cold water tap turned off, the boiler ignites	- drop in pressure in the water mains, with consequent water hammer
9	Insufficient radiator temperature	- check C.H. temperature probe - check by-pass - check gas pressures

25 Electrical Diagrams

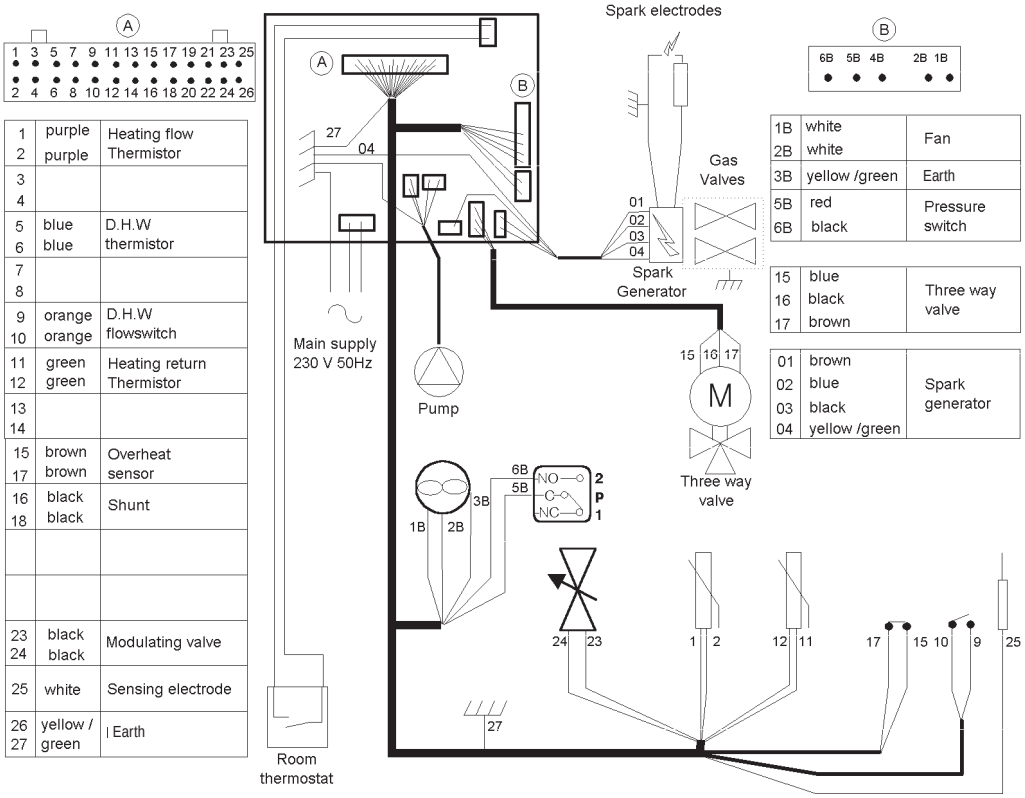

MX2 24 / MX2 30

SHORT LIST

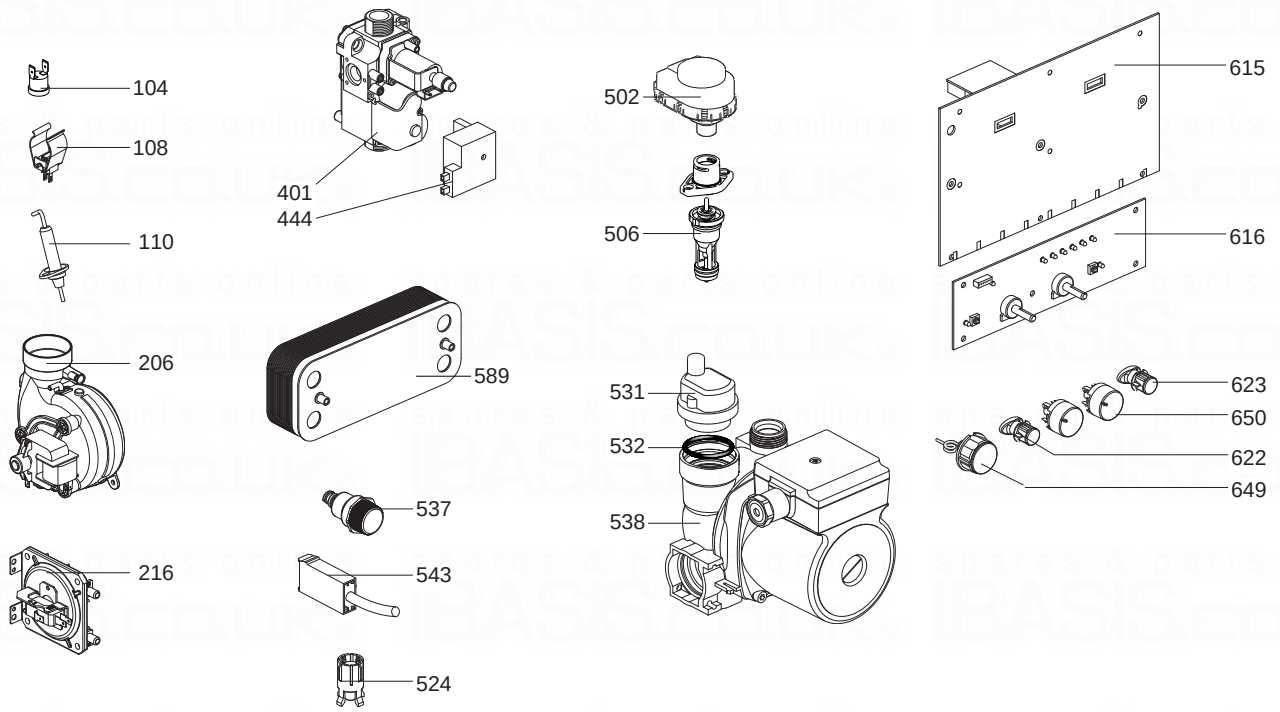

Key N°	Description	G.C N°	Manf. Pt. N°	Type	MX2 24 FF	MX2 30 FF		Manf. date from	Manf. date to
104	OVERHEAT THERMOSTAT 105°C		61010191		■	■			
108	THERMISTOR TEMP. SENSOR		990686		■	■			
110	IGNITION ELECTRODE		990436		■	■			
206	FAN ASSY 24FF		61310933		■				
	FAN ASSY 30FF		61304721			■			
216	AIR PRESSURE SWITCH		61313340		■				
	AIR PRESSURE SWITCH		61313932			■			
401	GAS VALVE		61312123		■	■			
444	IGNITER		61312612		■	■			
524	DHW FLOW SWITCH FLOAT		61311314		■	■			
531	AIR SEPARATOR		61304608		■	■			
532	GASKET KIT		61304618		■	■			
538	PUMP + AIR SEPARATOR		61301964		■	■			
537	PRESSURE RELIEF VALVE		61312668		■	■			
543	STOPPED WATER THROTTLE		61311745		■	■			
589	WATER / WATER HEAT EXCHANGER		61302409		■	■			
615	P.C.B.		65100774		■	■			
616	PRINTED CIRCUIT BOARD (DISPLAY)		61400240		■	■			
622	BUTTONS		61312414		■	■			
623	IGNITION PUSH ROD		61313385		■	■			
649	PRESSURE GAUGE		61313561		■	■			
650	WHITE KNOB		61312413		■	■			

NOTES

spares & parts online IBASIS.CO.UK

Technical Data

Model	MX2 24 FF	MX2 30 FF
Appliance Category	II 2H3+	II 2H+3+
Heat output C/H ....Pw	10 to 24 kW	12 to 30 kW
Heat output DHW ....Pw max	24 kW	30 kW
DHW flow rates (ΔT: 30 K)	11.4 l/min.	14.3 l/min.
Minimum DHW operating flow rate	2 l/min	2 l/min
Minimum DHW working pressures ....Pw min	0.1bar	0.1bar
Maximum DHW working pressures ....Pw max	10 bar	10 bar
C/H circuit pressure max operating ....Pw max	3 bar	3 bar
Supply	230 volts - 50 Hz	
Consumption	150 W	
Protection	IP X4D	
Designed temperature rise	20°C	20°C
Natural gas G20		
Gas rate max	2.75 m³/h	3.44 m³/h
Gas rate mini	1,27 m³/h	1.50 m³/h
Nominal inlet pressure	20 mbar	20 mbar
Burner injector diameter	1.35mm	1.30mm
Butane LPG G30		
Gas rate max	2.05 kg/h	2.56 kg/h
Gas rate mini	0.95 kg/h	1.12 kg/h
Nominal inlet pressure	28 mbar	28 mbar
Burner injector diameter	0.80mm	0.80mm
Propane LPG G31		
Gas rate max	2.02 kg/h	2.52 kg/h
Gas rate mini	0.93 kg/h	1.10 kg/h
Nominal inlet pressure	37 mbar	37 mbar
Burner injector diameter	0.80mm	0.80mm
Flue Lengths		
Max (Horizontal ø60/100)	4 metres	4 metres
Max (Vertical ø60/100)	4 metres	4 metres
Max (Horizontal ø80/125)	13 metres	18 metres
Max (Vertical ø80/125)	13 metres	18 metres

This appliance is suitable for Natural gas or LPG. A gas conversion must be made by a competent person.

Chaffoteaux & Maury are continuously improving their products and therefore reserve the right to change specifications without prior notice and accepts no liability for any errors or omission in the information contained in this document.

Manufacturer: **Chaffoteaux & Maury - France**

Commercial subsidiary: **MTS (GB) Limited**
MTS Building
Hughenden Avenue
High Wycombe
Bucks HP13 5FT

Telephone: (01494) 755600
Fax: (01494) 459775
Internet: www.chaffoteaux.co.uk
E-mail: info@mtsgb.ltd.uk

Technical Support Help Line: 0870 241 8180
Customer Service Help Desk: 0870 600 988

1313374c - 12/2003