GT 400 A

Fuel oil/gas hot water boiler

English
11/03/09

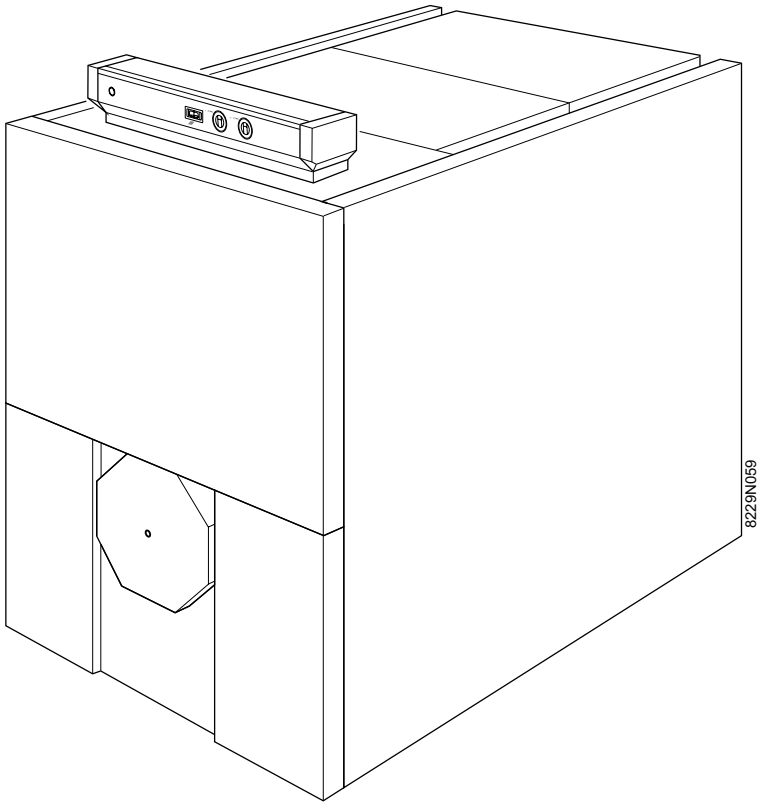

Assembly and installation instructions

Please Read & Save This Instruction Manual for Future Reference

Warning:
Before putting the boiler into operation read this manual carefully.

Warning:
The operating manual is part of the documentation that is delivered to the installation's operator. Go through the information in this manual with the owner/operator and make sure that he or she is familiar with all the necessary operating instructions.

Notice:
This manual must be retained for future reference. Improper installation, adjustment, alteration, service or maintenance can cause injury, loss of life or property damage. Refer to this manual. For assistance or additional information consult a qualified installer, service agency or the gas supplier.

82294154 E 94863449

De Dietrich

Guideline of Notices

Warning:
indicates presence of hazards that can cause, if not avoided, severe personal injury, death or substantial property damage.

Caution:
indicates presence of hazards that will or can cause, if not avoided, minor personal injury or property damage.

Notice:
Application comment for optimum use of equipment and adjustment as well as useful information.

Reference to an other instruction book.

Observe the following symbols

DANGER
due to explosion of gas.

- Work only on gas components when you have a license to do so.
- Note that the assembly of gas and vent connections, the initial start-up, the electrical connections, the maintenance and service can only be performed by a licensed service contractor or technician.

DANGER
due to electricity.

- Prior to doing any work on the heating system, disconnect all electrical power to the boiler at the emergency switch.
- It is NOT sufficient to shut off only the boiler control!

CAUTION!
SYSTEM DAMAGE
due to improper installation.

- Observe local and state codes as well as common industry practices during the installation and operation of the heating appliance.

CAUTION!
SYSTEM DAMAGE
due to inadequate cleaning and maintenance.

- A boiler cleaning and maintenance should be performed annually. Verify complete system operation at the same time.
- Correct the problem immediately to prevent damage to the system!

Caution:
Refer to User's Manual regarding the carcinogenic hazard of crystalline silica that may be found during installation, servicing and removal of this boiler.

Safety Considerations

Please observe the following safety instructions.

Read this manual carefully.

Correct installation and adjustment of the burner and the control panel is a precondition for safe, efficient operation of the gas boiler.

Read this manual and the specifications on the safety label carefully before attempting to put the burner into operation.

Do not store or use gasoline or other flammable liquids in the vicinity of this or any other appliance.

WHAT TO DO IF YOU SMELL GAS:
- Do not try to light any appliance.
- Do not touch any electric switch, do not use any phone in your building.
- Immediately call your gas supplier from a neighbor's phone. Follow the gas supplier's instructions.
- If you cannot reach your gas supplier, call the Fire Department.

Installation and service must be performed by a qualified installer, service agency or the gas supplier.

Warning:
Improper installation, adjustment, and/or operation could cause carbon monoxide poisoning resulting in injury or death.
This product must be installed and serviced by a professional service technician who is experienced and qualified in hot water boiler installation and gas combustion.

Caution: Strict compliance with these instructions is a precondition for the correct operation of the boiler.

IMPORTANT
Service on this boiler should be undertaken only by trained and skilled personnel.
Keep boiler area clear and free from combustible materials, gasoline and other flammable vapors and liquids.
Do not place any obstruction in the boiler room that will hinder the flow of combustion and ventilating air.
Read these instructions carefully before proceeding with the installation of boiler. Post instructions near boiler for reference by owner and serviceman.
Maintain instructions in legible condition.

"Installation of this equipment must be in accordance to National and local codes having jurisdiction"

[Canadian Installations] CSA B139 for Oil & CSA B149 for Gas
[USA Installations] NFPA 31 for Oil & NFPA 54/ANSI Z223.1 for Gas.

The boiler must be connected to a venting system that will safely exhaust all flue gases in an effective manner.

The boiler is certified to use only these fuels listed below, do not burn garbage or paper, never leave combustible material near it. Do not burn gasoline, crankcase draining or any other fuel containing gasoline.

Natural Gas, Propane Gas & # 2 Fuel Oil

Contents

Contents 3

Regulations and guidelines 4

General 4

1 Boilers covered by this document 4
2 Uncrating 4
3 Packing. 5
4 Technical specifications of boilers 7

Main Dimensions 8

Boiler Installation. 9

1 Installation 9
2 Ventilation. 10

Assembly 10

Piping 27

1 Dimensional information required. 27
2 Recommendations 27
3 Filling 28
4 Ancillaries 28

Combustion and ventilation 30

1 Clearances 30
2 Replacement procedures 31
3 Dimensional information required for connection of the boiler 31

Oil or gas connection 32

1 Specific technical information supplied with the burner 32

Electrical. 33

1 Wiring 33
2 Wiring procedure 33
3 Wiring boiler panel 34

Start up procedures. 35

1 Shut-down procedures 36

Maintenance 37

1 Boiler 37
2 Shut down procedure 38

Service and maintenance schedule 39

Isometric views and list of spare parts - GT 400 A 40

Regulations and guidelines

The installation and operating instructions shown here are given as a guide for installation and operation and are not meant to replace any State or Local Codes that may apply to the individual installation. Good engineering practice should be used. Any deviation from laws or regulations or industry Code or these instructions will void the boiler warranty and any other responsability or liability of the De Dietrich Thermiques S.A.

Only a qualified and licenced heating professional is to carry out the removal, installation, startup and maintenance of this boiler. The boiler must be installed according to all national and local codes having jurisdiction. The operation of the boiler must be verified and all safety controls checked. Any defect or abnormal operations must be corrected immediately. The entire system requires annual service and cleaning at least once a year.

Installation codes

• THE BOILER SHALL BE ASSEMBLED AND INSTALLED BY A QUALIFIED PROFESSIONAL ONLY. STRICT COMPLIANCE WITH THESE INSTALLATION AND OPERATING INSTRUCTIONS IS A PRECONDITION FOR THE CORRECT AND GUARANTEE OF THE BOILER.

• THE INSTALLATION MUST CONFORM TO THE REQUIREMENTS OF THE AUTHORITY HAVING JURISTRICTION OR, IN THE ABSENCE OF SUCH REQUIREMENTS, TO THE CAN/CGA B-149 FUEL GAS INSTALLATION CODES AND CSA B-139 OIL INSTALLATION CODES.

• WHERE REQUIRED BY THE AUTHORITY HAVING JURISTRICTION, THE INSTALLATION MUST CONFORM TO THE STANDARD FOR CONTROLS AND SAFETY DEVICES FOR AUTOMATICALLY FIRED BOILERS ANSI/ASME CSD-1.

• THE INSTALLATION OF THE RELIEF VALVE SHALL BE CONSISTENT WITH ANSI/ASME BOILER PRESSURE VESSEL CODE, SECTION IV CSA B51.

• THE BOILER MUST NOT BE INSTALLED ON CARPETING.

• IF AN EXTERNAL ELECTRICAL SOURCE IS UTILIZED, THE BOILER WHEN INSTALLED, MUST BE ELECTRICALLY BONDED TO GROUND IN ACCORDANCE WITH THE REQUIREMENTS OF THE AUTHORITY HAVING JURISTRICTION OR, IN THE ABSENCE OF SUCH REQUIREMENTS, WITH THE CANADIAN ELECTRICAL CODE PART 1, CSA C22.1, ELECTRICAL CODE.

LABEL ALL WIRES PRIOR TO DISCONNECTION WHEN SERVICING CONTROLS. WIRING CAN CAUSE IMPROPER OPERATION AFTER SERVICINGS. "VERIFY PROPER OPERATION AFTER SERVICE".

General

The boilers of the **GT400 A** range are automatic independent hot-water boilers designed for connecting to a flue which require a separate fuel oil or gas burner.

1 Boilers covered by this document

The GT 400 A boilers are pressurized hot water heating boilers, connected to a flue, fitted with an independent burner using domestic fuel oil or gas.

The boiler is equipped with standard control panel.

2 Uncrating

Upon arrival, check shipment to ensure all parts have been shipped. Inspect all items for delivery damage. Report all damage and shortages to the delivery carrier. Report any damage and shortages to the Distributor.

3 Packing

Before installing the boiler, check the chart below to ensure you have all the components.

ITEM	Box nr.	GT 408A	GT 409A	GT 410A	GT 411A	GT 412A	GT 413A	GT 414A
Underframe (dimensions according to model)		1	1	1	1	1	1	1
Front section		1	1	1	1	1	1	1
Normal intermediate section		5	6	7	8	9	10	11
Special intermediate section		1	1	1	1	1	1	1
Rear section		1	1	1	1	1	1	1
Common accessories	**CS 20**	1	1	1	1	1	1	1
Accessories (composition according to model)		1	1	1	1	1	1	1
Baffles	**CS 30**	1						
	CS 31		1	1				
	CS 34					1		
	CS 35						1	1
	CS 36				1			
Inner body insulation	**CS 51**	1						
	CS 53		1	1				
	CS 55				1	1		
	CS 57						1	1
Casing : common parts	**CS 428**	1						
	CS 429		1					
	CS 430			1				
	CS 431				1			
	CS 432					1		
	CS 433						1	
	CS 434							1
Casing : varying parts	**CS 11**			1			1	
	CS 12	1			1			1
	CS 13		1	1	1	2	2	2
	CS 14		1			1		
Wiring ducts	**CS 41**	1						
	CS 42		1					
	CS 43			1				
	CS 44				1			
	CS 45					1		
	CS 46						1	
	CS 47							1
Standard control panel	**FA 122**	1	1	1	1	1	1	1

ITEM	Box nr.	GT 408A	GT 409A	GT 410A	GT 411A	GT 412A	GT 413A	GT 414A
Technical documents	CS 418	1						
	CS 419		1					
	CS 420			1				
	CS 421				1			
	CS 422					1		
	CS 423						1	
	CS 424							1

Item		Unit	GT 408 A	GT 409 A	GT 410 A	GT 411 A	GT 412 A	GT 413 A	GT 414 A
Firing Sequence			Consult Burner Technical Data						
[CSA] - Gas Input		MBH	1730	1947	2278	2567	2826	3100	3389
		kW	507.0	570.5	667.6	752.3	828.3	908.6	993.3
[CSA] - # 2 Fuel Oil Input		US GPH	12.00	13.50	15.80	17.80	19.60	21.50	23.50
[CSA] - Output [Gas-Oil]		MBH	1471	1655	1937	2182	2402	2635	2880
		kW	431.1	485.0	567.6	639.4	704.1	772.3	844.2
[NET] - Output [Gas-Oil]		MBH	1279	1439	1684	1897	2089	2292	2505
Cast Iron sections		#	8	9	10	11	12	13	14
Flue-way baffles		#	16	16	16	24	20	20	20
Water capacity		US Gal	96.72	108.08	119.45	130.81	142.17	153.54	164.90
		Liter	366	409	452	495	538	581	624
Water resistance [Δt = °F]	18° F	Ft. H_2O	1.24	1.84	2.88	3.51	4.55	5.39	6.82
	27° F	Ft. H_2O	0.669	0.903	1.24	1.57	2.09	2.63	3.68
	36° F	Ft. H_2O	0.318	0.452	0.753	0.903	1.12	1.34	1.81
Combustion chamber Dimensions	Diameter [equivalent]	Inch	20.87						
		mm	530						
	Depth	Inch	46.57	52.87	59.17	65.47	71.77	78.07	84.87
		mm	1183	1343	1503	1663	1823	1983	2143
	Volume	ft^3	10.95	12.50	13.98	15.50	16.99	18.47	19.95
		m^3	0.31	0.354	0.396	0.439	0.481	0.523	0.565
MAWP [Water]		PSI	ASME IV Rating Class 30 - (90 PSI) [See Canadian Provincial CRN approvals]						
Min. Safety Relief Capacity		MBH	1471	1655	1937	2182	2402	2635	2880
FA 122 Panel	Electrical connection	V/P/H	120/1/60						
	Max. Water Temp. Safety Limit [MR]	°F	248						
		°C	120						
	Operating Water Temperature Range	°F	86 - 185						
		°C	30 - 85						
Chamber resistance		Inch w.c.	0.44	0.60	0.80	1.00	1.00	1.00	1.00
		mbar	1.1	1.5	2	2.5	2.5	2.5	2.5
Gas-Vent Category		#	I, II - III or IV						
Boiler Vent Connection		Inch	10	10	10	12	12	12	12
Weight [Dry]		lb	3241	3638	4034	4431	4828	5225	5622
		kg	1470	1650	1830	2010	2190	2370	2550

- CSA - MBH Output based on Thermal Efficiency Test According to ANSI Z21.13a/CSA 4.9a-2005
- [NET] MBH Output Factor 1.15, Allowance for Piping and Pickup Losses
- Chamber Resistance Based on Neutral Chimney-Vent Pressure
- Gas Vent Category Based on Several Factors [CO2 content, Vent Pressure & Net-Flue Gas Temp]
- Approved for Direct-Vent, Use Only Approved Venting as Listed
- Natural Draft Applications, Approved for Type L vent [Gas-Oil] or Type B Vent [Gas Only]
- Conversion Btu to kW = 3,412 Btu per kW
- All Models are Design Certified & Eligible to Bear Approval Marking as Shown.
- All Models Certified to Fire; # 2 oil, Natural & Propane Gases. Consult factory for Available Burners.
- All Models Comply and Certified in Accordance to the latest Canadian & US standards
- To Obtain Current IBR Ratings, consult their publications and website.

Main Dimensions

GT 400 A

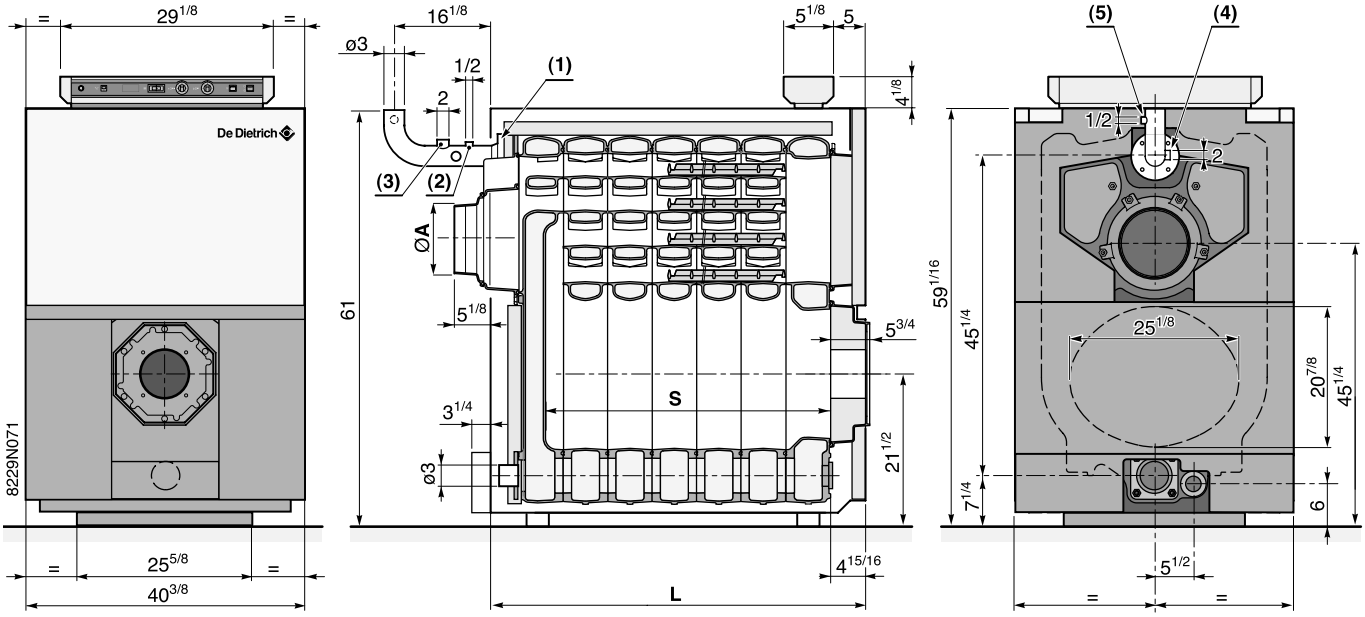

(1) 3” 150# weld neck flange

(2) 1/2” NPT tapping for temp sensing well, etc…

(3) 2” NPT tapping for safety relief valve

(4) 3/4” NPT tapping for low water cutoff probe type

(5) 1/2” NPT tapping for combination pres/temp gauge

Type of boiler	GT 408 A	GT 409 A	GT 410 A	GT 411 A	GT 412 A	GT 413 A	GT 414 A
L	59 1/4"	65 1/2"	71 7/8	78 1/8"	84 1/2"	90 3/4"	97"
S	46 9/16	52 7/8"	59 1/8	65 1/2"	71 3/4"	78 1/16"	84 3/8"
Ø A out.	9 7/8	9 7/8	9 7/8	11 13/16"	11 13/16"	11 13/16"	11 13/16"

Dimension "X" Maximum Burner Length (inches)					
Boiler Model	Riello	Weishaupt	Power flame	Fuel Master	Gordon Piatt
GT408A	22 13/16	23	26	32 1/2	26
GT409A		32			
GT410A	33 1/16	31 3/16	25 1/8		
GT411A			30 1/8		
GT412A					
GT413A		37 7/16		35	
GT414A				38 1/2	

Notes:

-Dimension are for gas burners only

-Oil and combination oil/gas burner, refer to burner manufacturer specifications

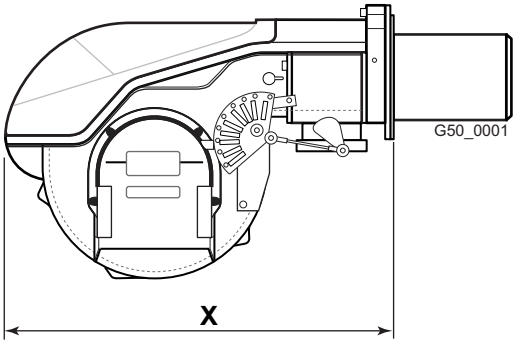

1 Installation

The GT 400 A boiler has a sturdy underframe, it does not need any special base although a housekeeping pad is recommended to keep steel parts out of casual water. Its furnace is closed, so it is not necessary to place it on a fireproof floor, but the floor must be able to bear the weight.

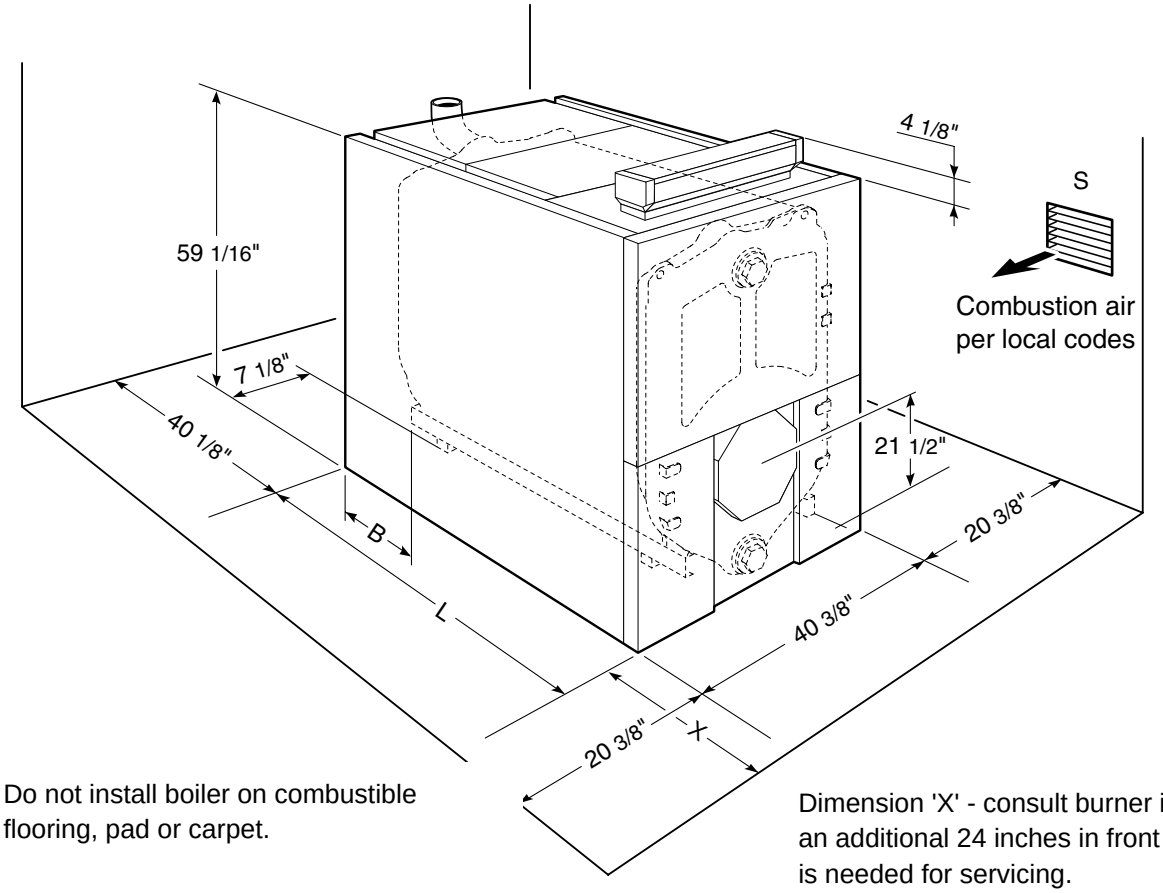

Do not install boiler on combustible flooring, pad or carpet.

Dimension 'X' - consult burner information, an additional 24 inches in front of the burner is needed for servicing.

	Dimension L	Dimension B	Dimension C
GT 408 A	$59^{1/4"}$	$5^{3/8"}$	24"
GT 409 A	$65^{1/2"}$	$1^{5/8"}$	71"
GT 410 A	$71^{7/8"}$	$4^{1/8"}$	71"
GT 411 A	$78^{1/8"}$	$1^{5/8"}$	71"
GT 412 A	$84^{1/2"}$	$4^{1/8"}$	76"
GT 413 A	$90^{3/4"}$	$1^{5/8"}$	76"
GT 414 A	97"	$4^{1/8"}$	76"

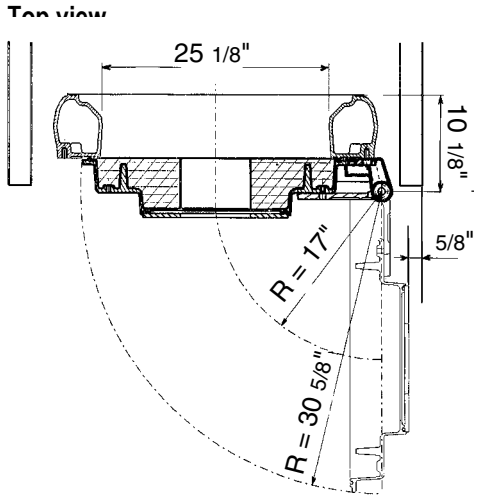

Additional the space required when the burner door is open.

2 Combustion Air Supply

Boilers operating in atmospheres that contain fluorides or chlorides such as beauty shops and automotive repair garages where air conditioning services are performed or industrial applications that may have corrosive elements in the air must have a clean source of combustion and ventilation air. Boiler damage by contaminants will void the warranty and any other responsibility or liability of De Dietrich Thermique/FES Ltd.

Note: Ensure boiler room is adequately ventilated and clear and free from combustible materials, gasoline and other flammable vapours and liquids.

Combustion air supply must be sized according to national and local codes
CSA B149.1 & .2 CSA B139
ANSI Z223.1 & NFPA 31

Assembly

To fit the sections, proceed in the following order :

- fit the **rear** section
- fit the **special intermediate** section
- fit **all of the normal intermediate** sections
- fit the **front** section

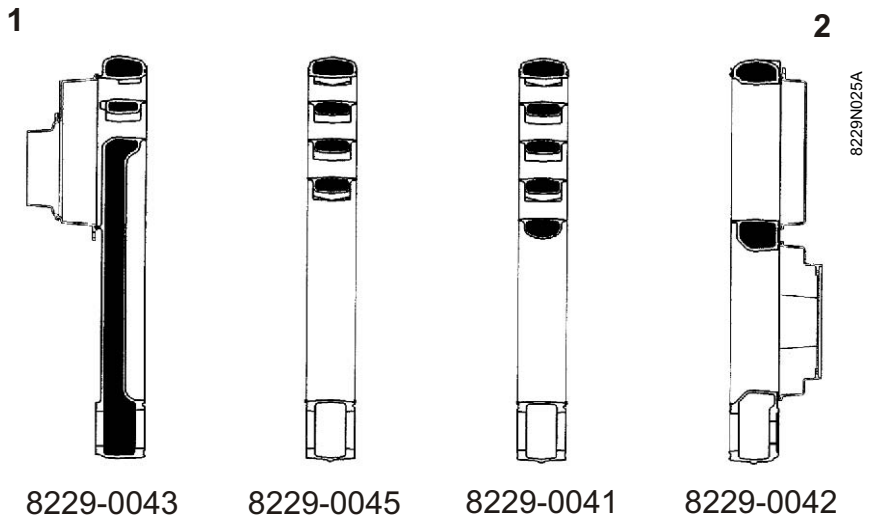

1: rear

2: front

Boiler model	Rear section n° 8229-0043	Special intermediate section 8229-0045	Normal intermediate section 8229-0041	Front section 8229-0042
GT 408 A	1	1	5	1
GT 409 A	1	1	6	1
GT 410 A	1	1	7	1
GT 411 A	1	1	8	1
GT 412 A	1	1	9	1
GT 413 A	1	1	10	1
GT 414 A	1	1	11	1

Step one

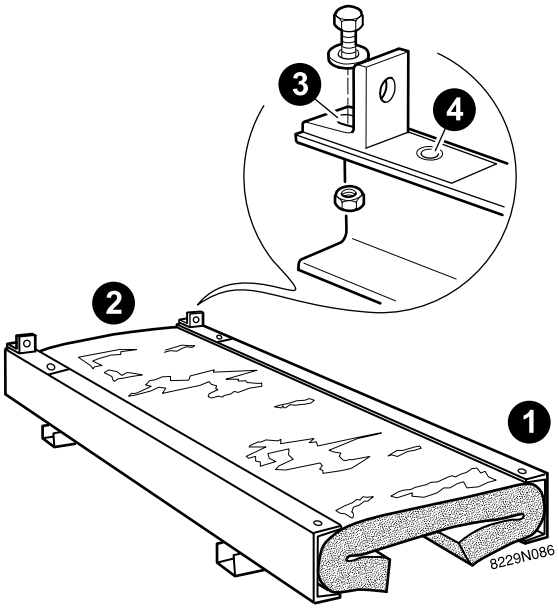

1 Front - 2 Rear

3 GT 408 - GT 410 - GT 412 - GT 414

4 GT 409 - GT 411 - GT 413

- Fit the 2 rear attachment brackets (in the **body accessories** pack) and attach them onto the framework using 2 bolts HM 12X25/25 + 4 washers L12 and 2 nuts HM 12.

Use the corresponding holes following the indication on the frame.

- Put the lower insulation in place (fabric to the top) **packs CS 51 to CS 57**. Adapt length if necessary or fold the lower insulation after the casing has been completely assembled.

Step two

Mounting of framework and thermocord

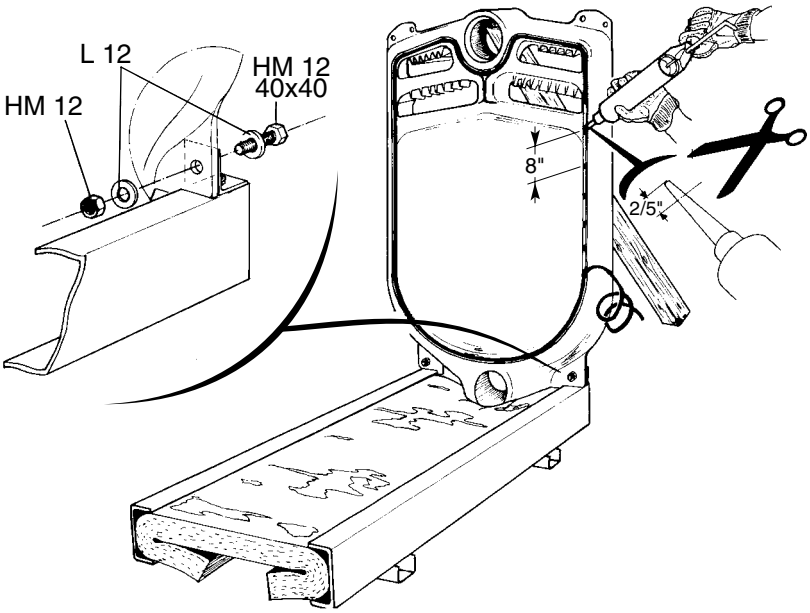

- Locate the framework depending on the direction in which the burner door will be opened and the length of the burner.
- Put the rear section in position on the framework and support it. Attach it at the brackets using 2 bolts HM 12x40/40 + 4 washers L 12 + 2 nuts HM 12.
- Using a silicone gun, put silicone mastic points (1 cartridge supplied with the accessory pack CS 20) into the sealing groove of the section (approx. every 5 to 10 cm) then carefully put the thermocord in place in the sealing groove.

do not pull on the cord when it is being put in, to avoid stretching to preserve its thickness. Avoid to locate the junction point at the bottom of the section.

Step three

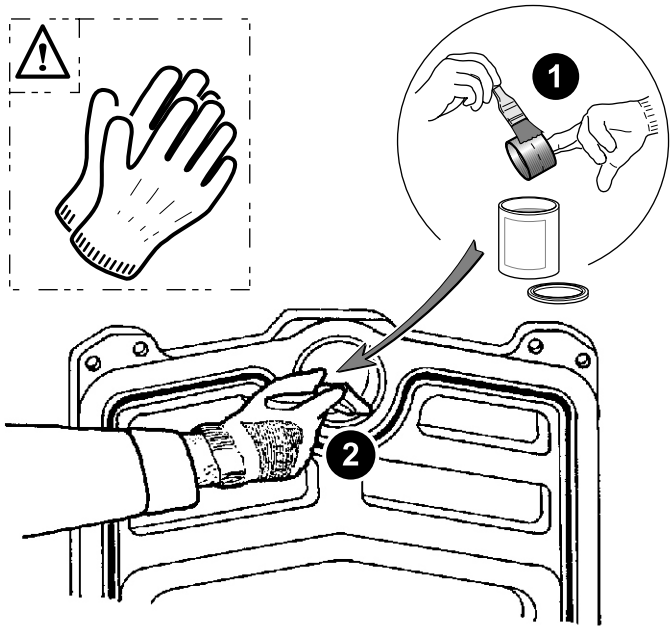

8229EN013

Handle the nipples with gloves, there might be sharp edges.

1. Clean the bores and nipples with a solvent.
2. Coat them with the lubricant supplied with the sections.

Step four

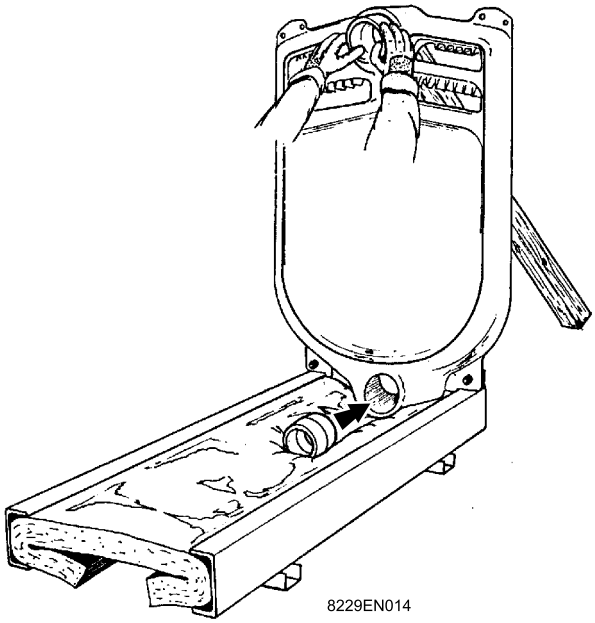

8229EN014

- Drive in the 2 nipples gently.

Step five

Assembling the sections

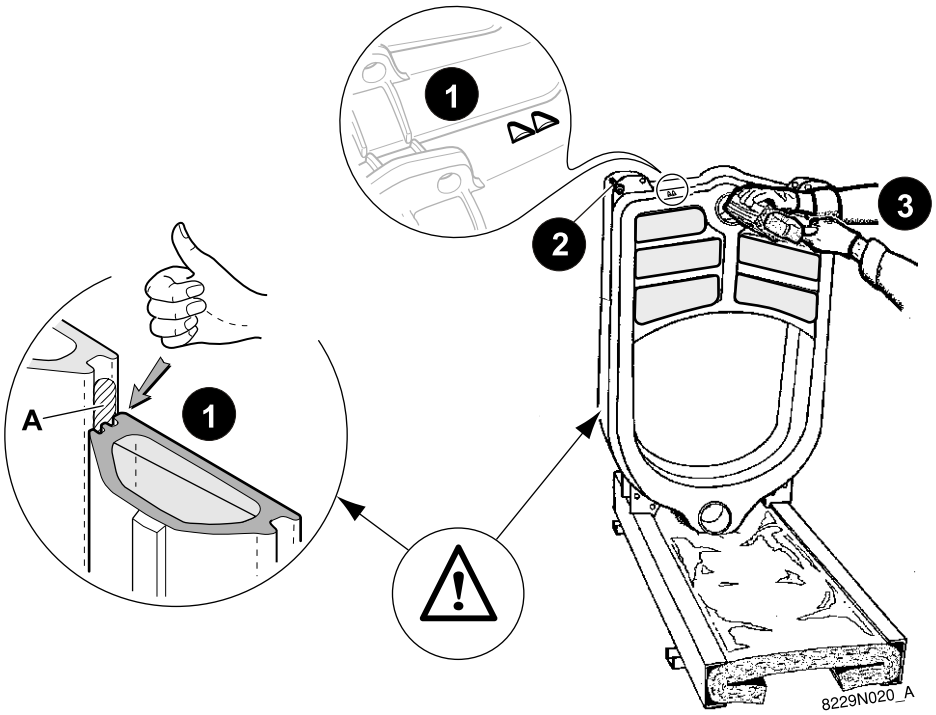

A : thermocord

Special intermediate section before rear section.

❶ Place the special intermediate section, note front back relationship **with the sealing groove against the thermocord**.

❷ For safety, insert an upper assembly rod (**body accessories** pack) into the holes in the 2 sections.

❸ Gently and at the same time drive in the 2 nipples of the rear section using a hammer and a piece of wood.

Step six

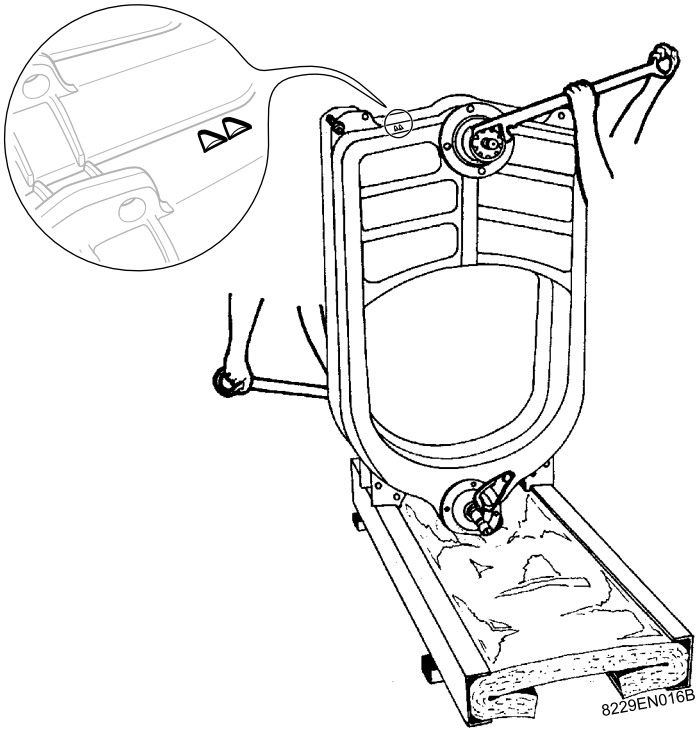

- Put the special assembly tool in place.
- Tighten progressively so the upper and lower connections come together equally at the same time.

Step seven

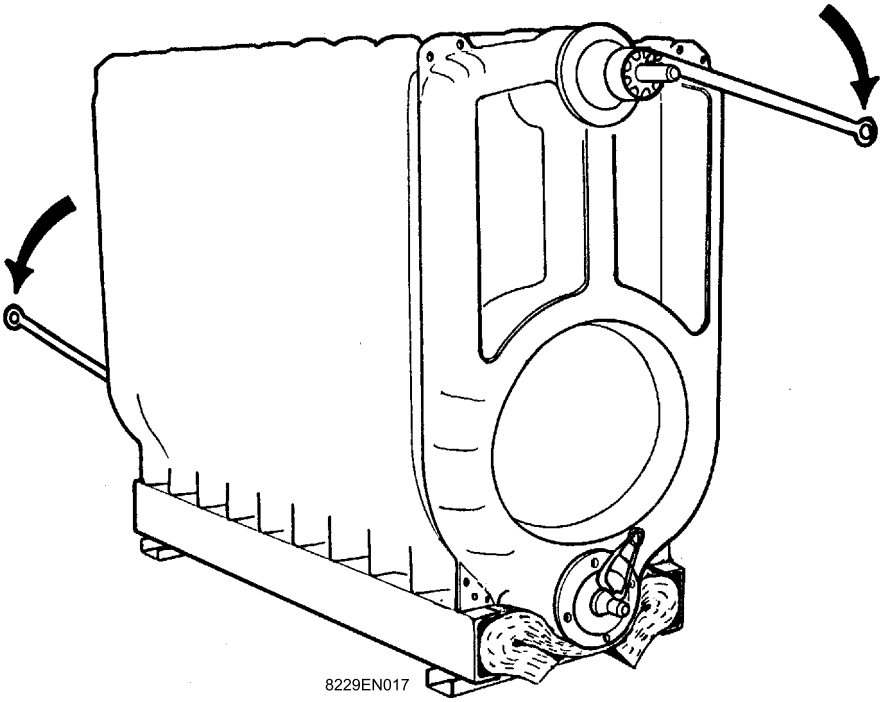

- Fit the remaining sections **one by one** in the order given, proceeding as per steps 3-4-5-6.
- **Leave the assembly tool in place**.

Step eight

Installing the assembly rods and upper casing supports

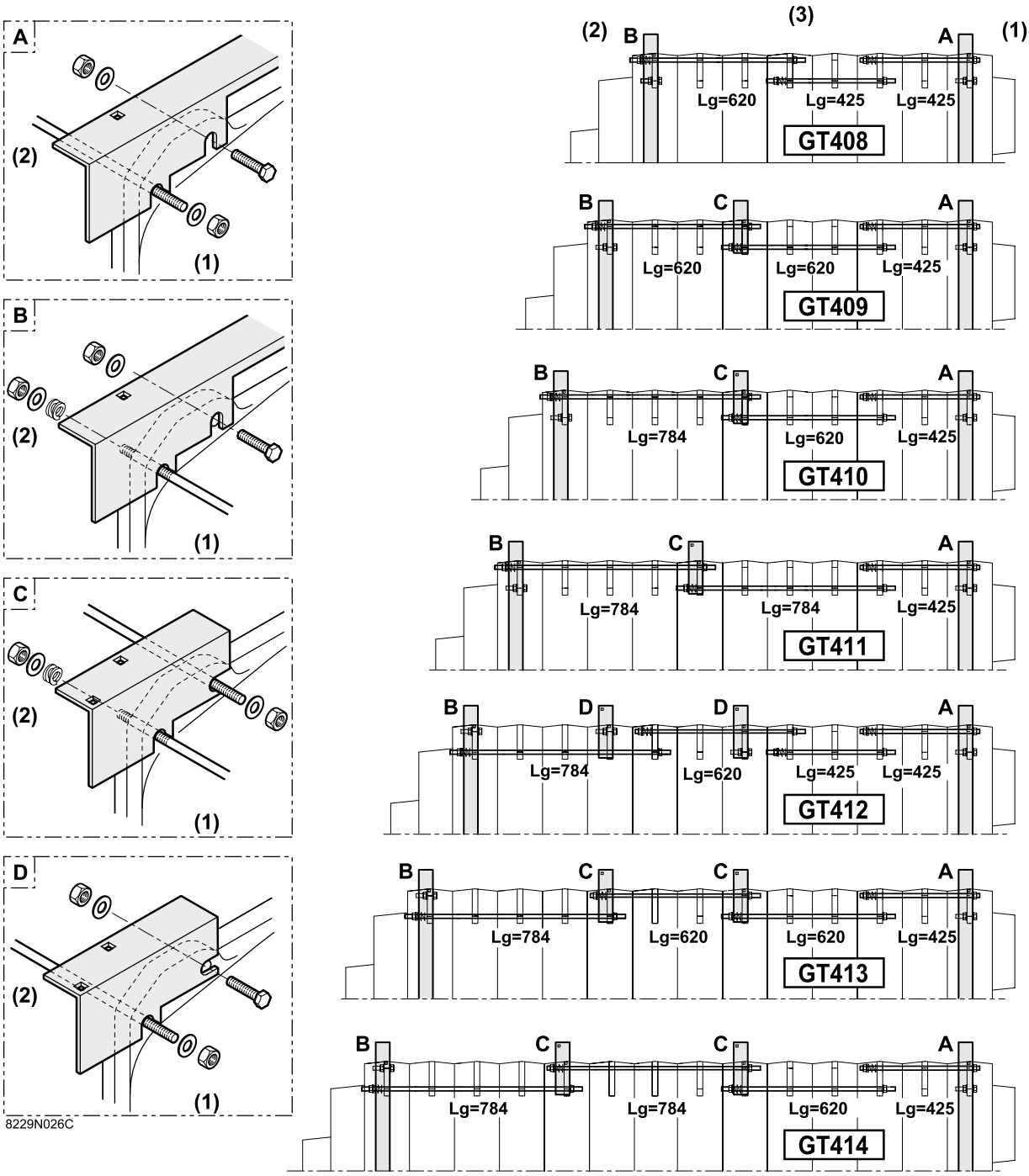

(1) Front - (2) Rear - (3) Top view

- Install the upper assembly rods (**body accessories** pack) in the order given in the figure above. Place the expansion spring and its washer on each rod towards the rear. **Stop tightening the nuts when the free space between the threads is about 1/16" to 1/8"**.
- Install the upper casing supports (pack **CS13**) and the upper cross-pieces (packs **CS428** to **CS434** and **CS11** to **CS14**) with the assembly rods (**body accessories** pack) as shown in details **A-B-C-D**.
- Install the lower assembly rods in the order given in the figure.
- Remove the assembly tool.

Step nine

Hydraulic test

After assembling the boiler body, the installer must carry out a water tightness test at a pressure equal to 1.5 times the operating pressure (that is 137 PSI minimum - 113 PSI in Alberta) for 30 minutes at least. The test must be done at room temperature.

Any drop in pressure indicates a leakage in the boiler body.

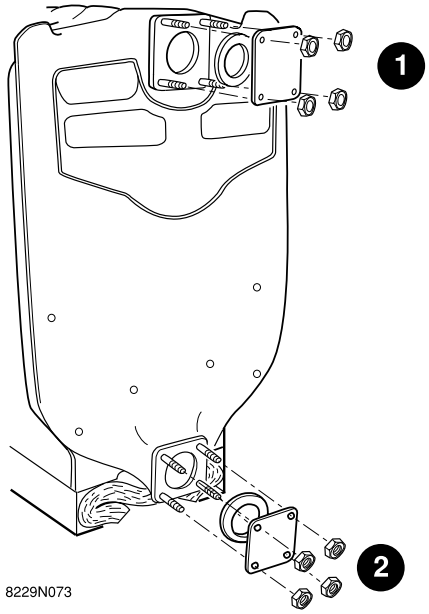

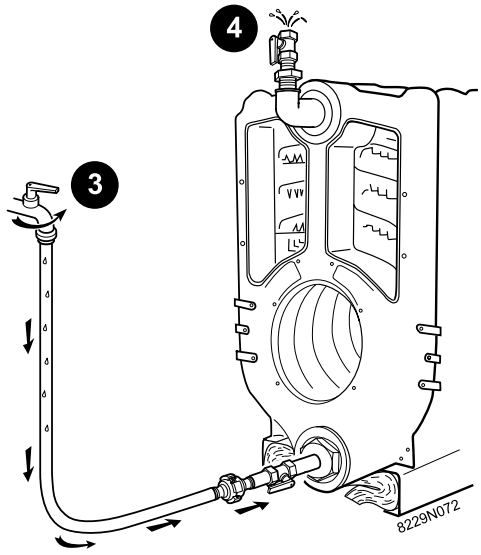

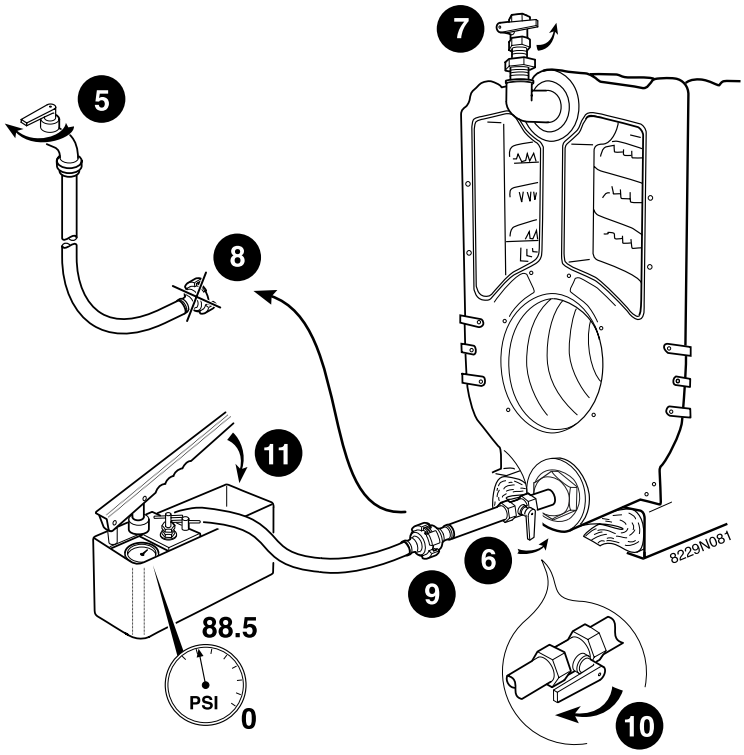

Ensure that all the air in the boiler is vented to avoid any bursting of the body.

After the tightness test, drain the boiler and remove all the parts used for the test.

Step ten

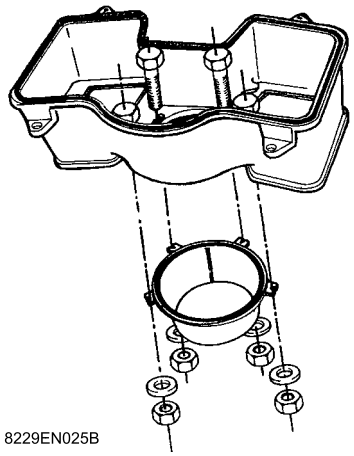

▶Install the flue nozzle (**body accessories** pack) using the 4 bolts HM 12 x 40 + 4 nuts H 12 and 4 washers on the flue outlet (**pack CS20**).

Step eleven

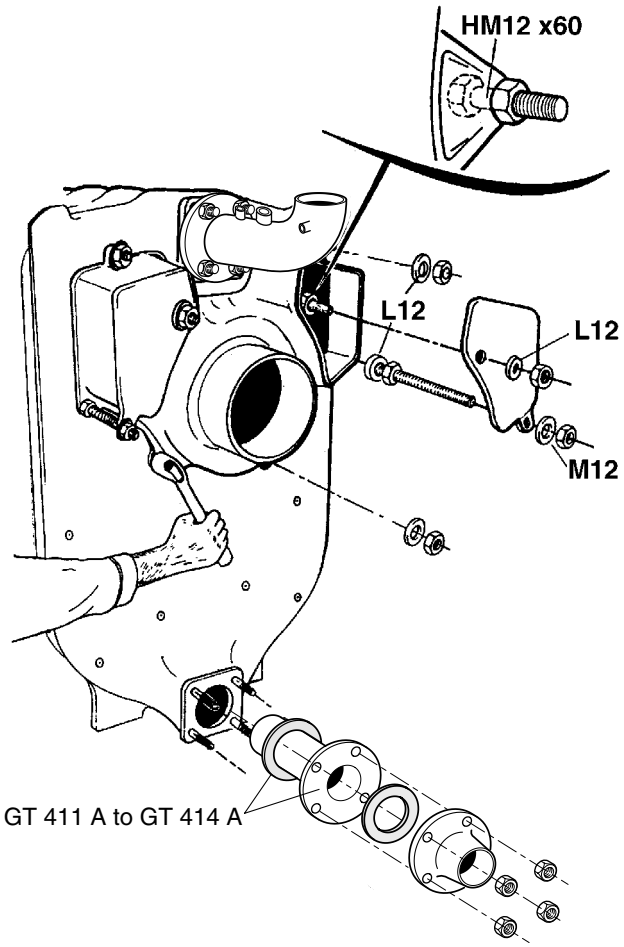

- Using a pipe wrench, install the 2 threaded rods (**body accessory** pack) M12 x 175 for the flue outlet.
- Install the flow flange and the gasket (**body accessories** pack) using 4 nuts H 19 (24 mm spanner).
- Install the return flange with the water balancing tube (only GT 411 A to GT 414 A) and the gaskets using 4 nuts H19 (24 mm spanner).
- Install the flue outlet onto the boiler body (6 nuts H 12 + 6 flat washers L 12 - 19 mm spanner).
- Install 2 bolts HM 12 x 60 + 2 nuts on the flue outlet for the cleaning traps (see detail).
- Attach the cleaning traps (pack **CS 20**) Using 4 bolts H 12 + 2 washers L 12 and 2 washers M 12.

Step twelve

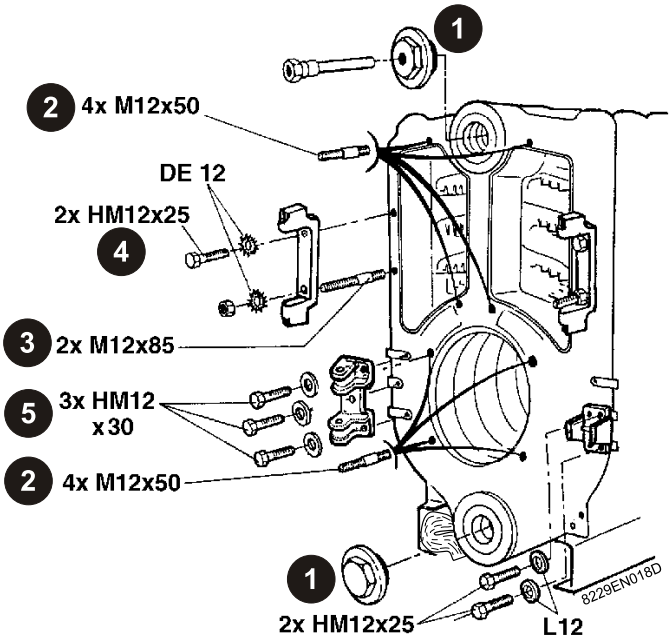

❶ Install the lower (solid) and upper plugs with the thermo-wells (**body accessory** pack). Do not forget the **hemp**.

❷ - ❸ Using a pipe wrench, put the 8 M 12 x 50 studs in place for the cleaning doors and the burner door and the 2 M 12 x 85 studs for the hinges of the sweeping doors.

❹ Fit the hinges for the clean-out doors (pack **CS20**) using 2 bolts HM 12 x 25 + 2 nuts M 12+ 2 washers DE 12.

❺ Fit the **combustion chamber door hinge** (**body accessories** pack) on the left or the right according to the direction the door will be opened, using 3 bolts HM 12 x 30 + washers CL 14.

Attach the guide flap (**body accessories** pack) using 2 bolts HM 12 x 25 + 2 washers CL 14.

Step thirteen

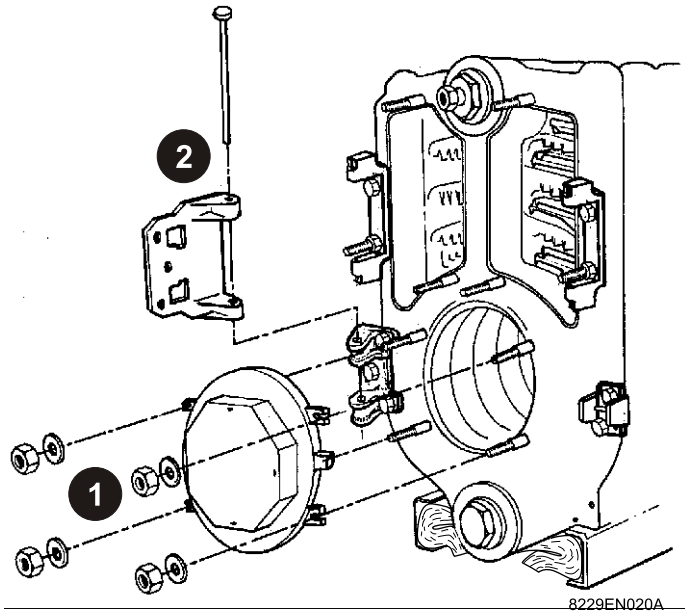

Body accessories pack

❶ Install the burner door (4 M 12 nuts+ 4 thick washers L12 x 32 x 5).

❷ Install the hinge mounted on its pin.

Step fourteen

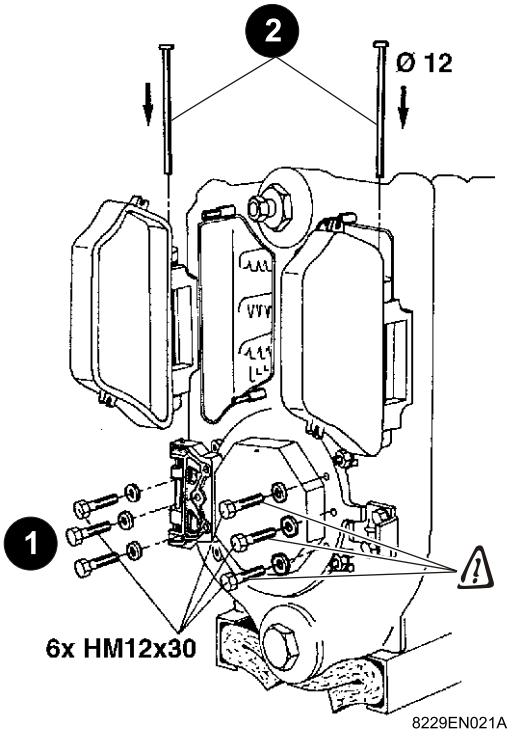

❶ Attach the hinge (**body accessories** pack) on the burner door using the 3 bolts HM 12 x 30 + 3 washers L 12 (previously removed).

⚠ **Leave the 3 bolts HM12x30 and the 3 washers L12 on the burner door in place on the opposite side to the hinge.**

❷ Install the left and right hand clean-out doors in place with their pin (pack **CS 20**).

Step fifteen (Flue-way baffles installation)

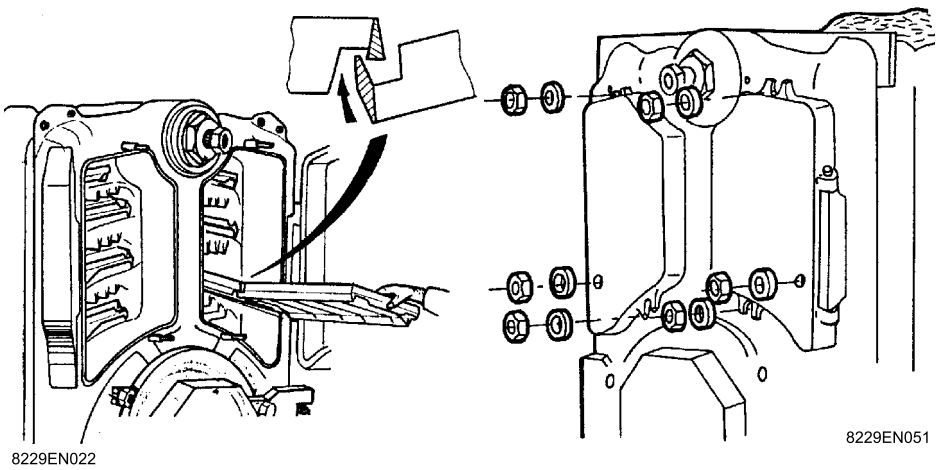

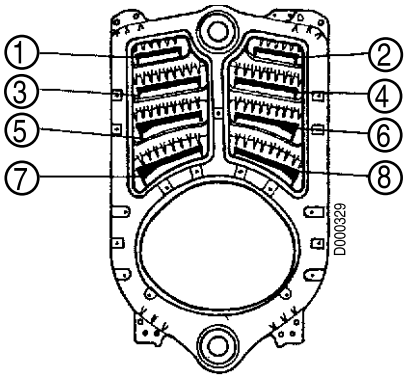

Insert baffles as shown in table below for each flue way shown above.

Baffles		GT 408 A pack **CS 30**	GT 409 A - GT 410 A pack **CS 31**	GT 411 A pack **CS 36**	GT 412 A pack **CS 34**	GT 413 A - GT 414 A pack **CS 35**
Upper	❶ ❷	8229-0010 8229-0022	2 x 8229-0010	2 x 8229-0010 1 x 8229-0022	2 x 8229-0010 1 x 8229-0022	3 x 8229-0010
Middle	❸ ❹	8229-0011 8229-0023	2 x 8229-0011	2 x 8229-0011 1 x 8229-0023	2 x 8229-0011 1 x 8229-0023	3 x 8229-0011
Lower	❺ ❻ ❼ ❽	8229-0012 8229-0024	2 x 8229-0012	2 x 8229-0012 1 x 8229-0024	2 x 8229-0012	2 x 8229-0012

ℹ The part number of the baffles is marked on the casting.

Install the upper (1), middle (2) and lower (3) + (4) baffles, noting the sequence given in the chart.

⚠ **interlock the baffles one into another before placing them completely in the flue way.**

▸ Close the sweeping doors and secure using 3 nuts HM12 + 3 thick washers L12 x 32 x 5.

Step sixteen

❶ Install the lower casing supports (pack CS 428 to CS 434) on the framework using 1 bolt HM 8 x 25 + lock washer for each support.

❷ Install the body insulation panels. Bear up the insulation by tying each strap to the lower casing support at each side of the boiler.

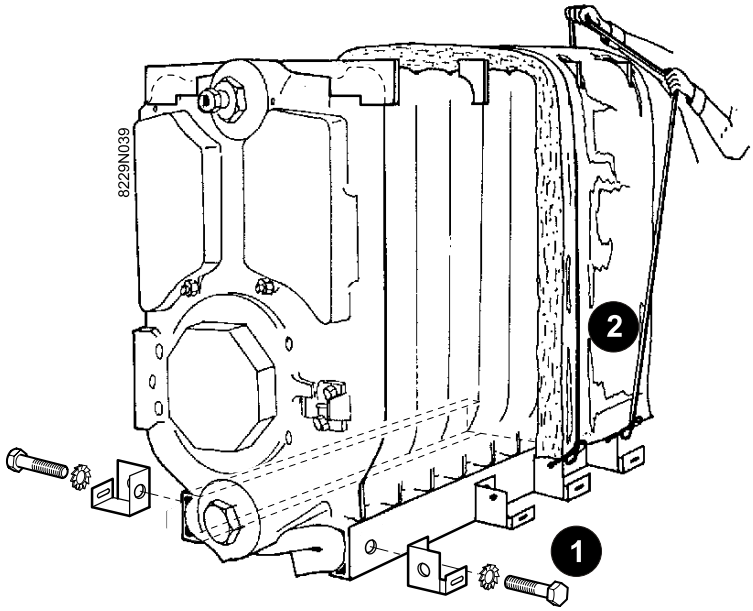

H, M 8x25

Boiler	Body insulation width				
	20 3/8"	20 3/8"	34 1/2"	32 5/8"	36 3/4"
	Front	◄	———	►	Rear
GT 408 A	1	-	-	-	1
GT 409 A	1	1	1	-	-
GT 410 A	1	1	-	1	-
GT 411 A	1	1	-	-	1
GT 412 A	1	2	1	-	-
GT 413 A	1	2	-	1	-
GT 414 A	1	2	-	-	1
pack	CS 10	CS 13	CS 14	CS 11	CS 12

Step seventeen

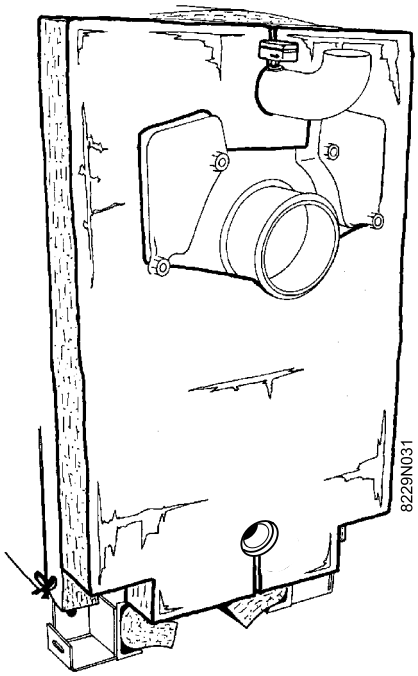

- Install the rear insulation (pack **CS10**).

Step eighteen

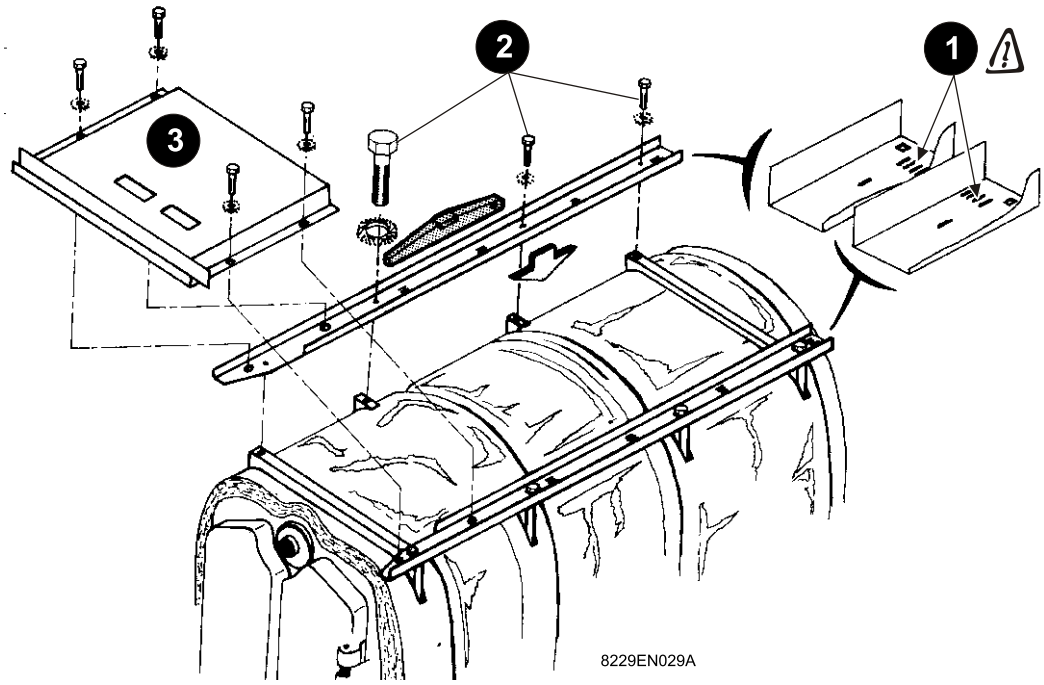

Pack **CS 41** to **CS 47** :

❶ Put the left and right cable ways in place, respecting the assembly sequence.

❷ Secure the cable ways (3 screws HM5x25 + serrated washers).

❸ Secure the front top panel (package **CS10**) with 4 screws HM5x25 + serrated washers.

Step nineteen : Control panel

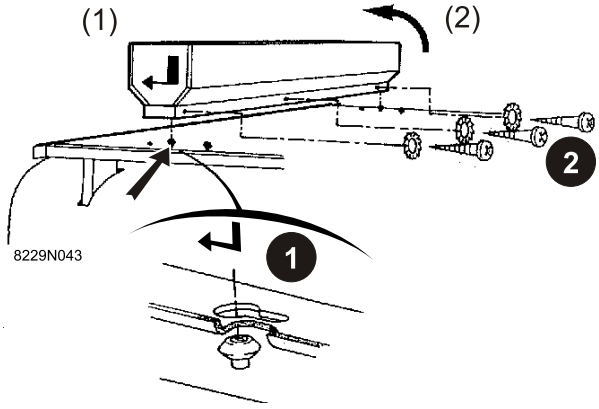

(1) Front - (2) Rear

❶ Position the control panel on the front bushes.

❷ Open the control panel (3 screws at the back).

Step twenty : Standard control panel

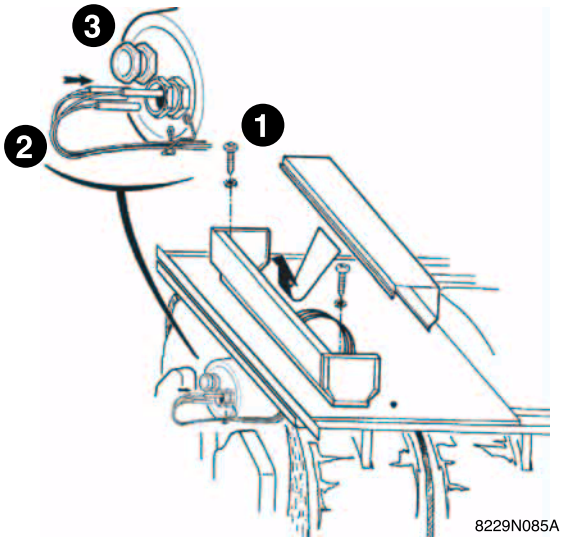

❶ Attach the control panel at the rear, on the top panel using 2 self tapping screws dia. 3.94 x 25 + lock washers.

❷ Carefully unwind and remove the various sensor and pass them through the opening in the front top cover. Insert them into the wells and secure them using a spring.

❸ The extra well is for auxilliary high temperature limit with manual reset.

Step twenty one : Electrical connections

- Make the electrical connections on the two terminal blocks provided for this purpose inside the control panel - see § 7.
- Close the control panel (3 self tapping screws + lock washers on the rear).

Step twenty two

- Position the front side panels (length $21^{1/4"}$) in the lower casing supports, **bushes towards the front**, then attach them in the wiring troughs.
- Attach at the front on the lower casing supports using 2 bolts HM 5 x 25 + lock washers and at the front top panel using 2 screws dia. 3.94 x 12.7 + lock washers.

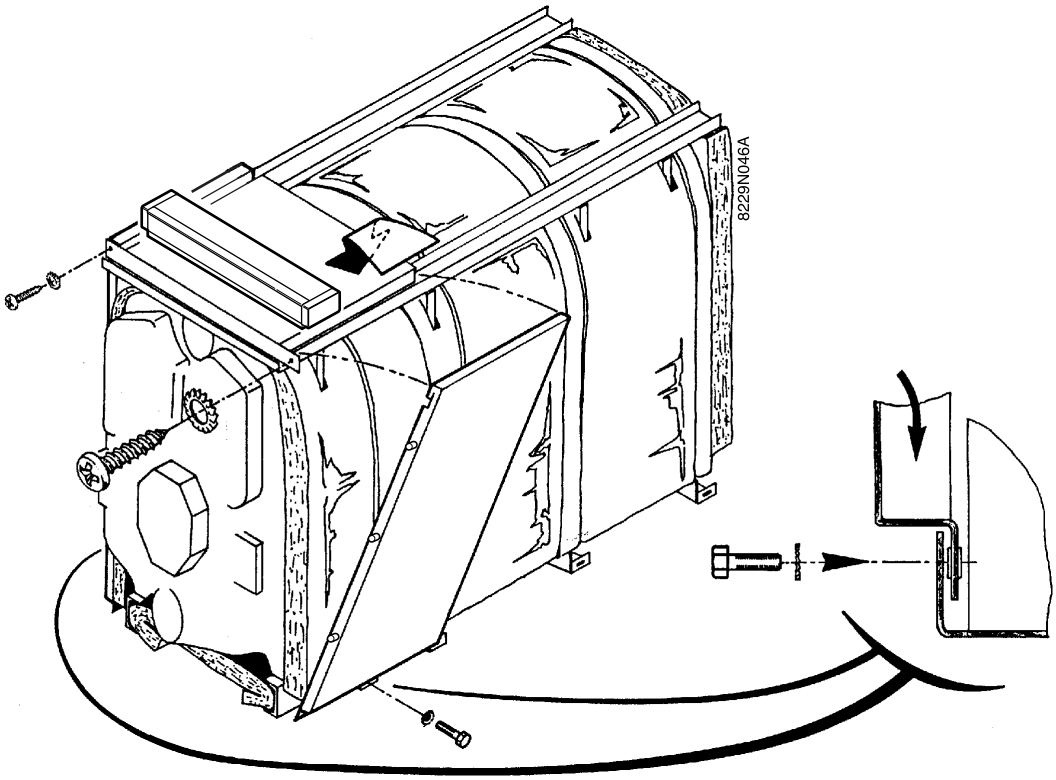

Step twenty three

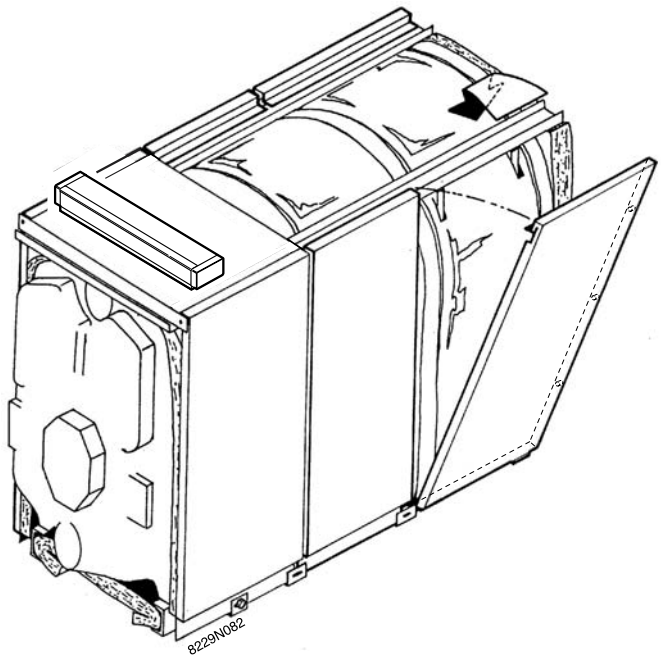

Position the rear side panels, bushes towards the rear.

Boiler	Side panels			
	Front	←		→ Rear
GT 408 A	$21^{1/4"}$ (CS428)	38"(CS12)		
GT 409 A	$21^{1/4"}$ (CS429)	$19^{5/8"}$(CS13)	$24^{1/8"}$(CS14)	
GT 410 A	$21^{1/4"}$ (CS430)	$19^{5/8"}$(CS13)	$31^{3/8"}$(CS11)	
GT 411 A	$21^{1/4"}$ (CS431)	$19^{5/8"}$(CS13)	38"(CS12)	
GT 412 A	$21^{1/4"}$ (CS432)	$19^{5/8"}$(CS13)	$19^{5/8"}$(CS13)	$24^{1/8"}$(CS14)
GT 413 A	$21^{1/4"}$ (CS433)	$19^{5/8"}$(CS13)	$19^{5/8"}$(CS13)	$31^{3/8"}$(CS11)
GT 414 A	$21^{1/4"}$ (CS434)	$19^{5/8"}$(CS13)	$19^{5/8"}$(CS13)	38"(CS12)

- Install the remaining side panels in the order given in the table : position each panel in the lower casing supports then attach it in the wiring trough.

Step twenty four

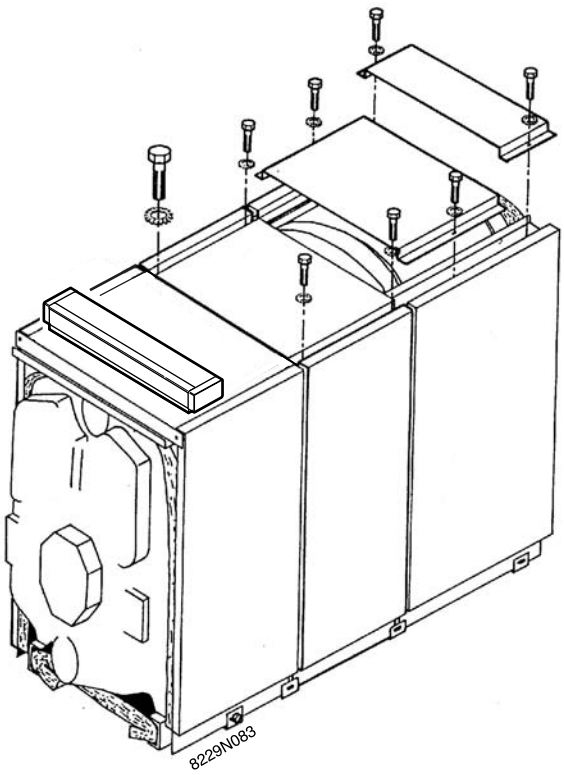

- Install the top covers from front to rear in the order given in the table.
- Install the first intermediate top cover (length 480) onto the wiring trough using 4 bolts HM 5 x 25 + lock washers.
- Install the remaining top covers onto the wiring trough using 2 bolts 5 x 12 + lock washers.

Boiler type	Front top panel	Intermediate top panel			Rear top panel	Pack
GT 408 A	$19^{5/8"}$ (CS10)	$19^{5/8"}$			20"	CS12
GT 409 A	$19^{5/8"}$ (CS10)	$19^{5/8"}$	$19^{5/8"}$		7"	CS13+CS14
GT 410 A	$19^{5/8"}$ (CS10)	$19^{5/8"}$	$19^{5/8"}$		$13^{1/2"}$	CS11+CS13
GT 411 A	$19^{5/8"}$ (CS10)	$19^{5/8"}$	$19^{5/8"}$		20"	CS12+CS13
GT 412 A	$19^{5/8"}$ (CS10)	$19^{5/8"}$	$19^{5/8"}$	$19^{5/8"}$	7"	CS14+CS13
GT 413 A	$19^{5/8"}$ (CS10)	$19^{5/8"}$	$19^{5/8"}$	$19^{5/8"}$	$13^{1/2"}$	CS11+CS13
GT 414 A	$19^{5/8"}$ (CS10)	$19^{5/8"}$	$19^{5/8"}$	$19^{5/8"}$	20"	CS12+CS13

Step twenty five : Fitting the rear panels (pack CS10)

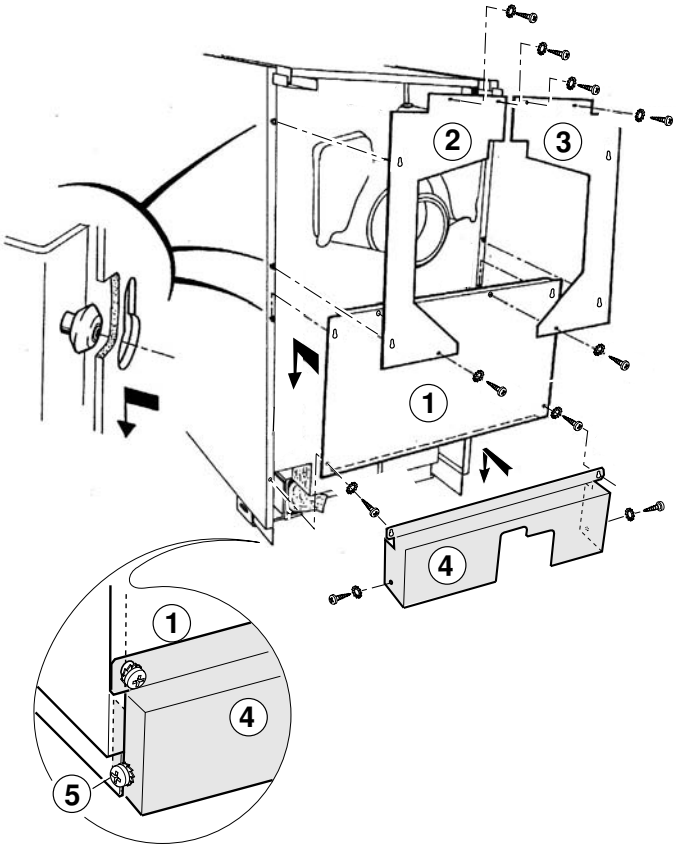

- Hook the lower rear panel (1) on the two slots and attach to the side panels using 2 self tapping screws dia. 3.94 x 12.7 + lock washer.
- Hook the left and right upper rear panels (2) and (3) on the two slots and attach to the lower rear panel using 1 self tapping screw dia. 3.94 x 12.7 + lock washer and to the rear top cover using 2 self tapping screws dia. 3.94 x 12.7 + lock washers.
- Hook the complementary lower rear panel (4) on the 2 screws of panel (1), then tighten these 2 screws to fix the panel (4) on (1).
- Block panel (4) against the side panels using the 2 screws + lock washers.

Step twenty six (pack CS10)

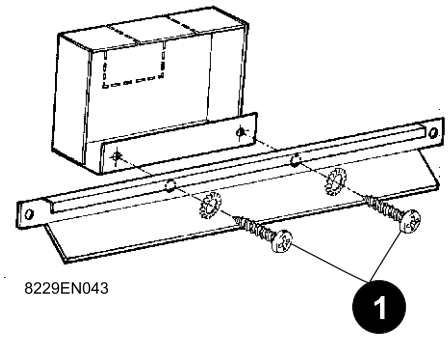

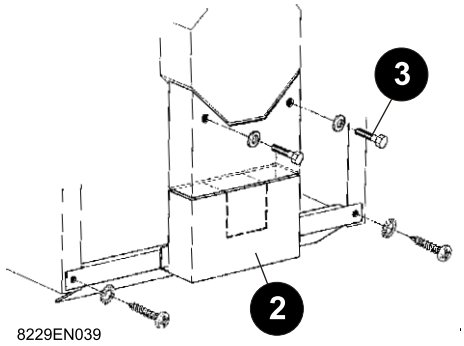

❶ Attach the lower front panel onto the crosspiece (2 screws ø 3.94 x 12.7 + lock washers).

❷ Attach the lower crosspiece and attach onto the side panels using 2 self-tapping screws ø 3.94 x 12.7 + lock washers.

❸ Attach the burner's upper front panel onto the burner door and fix it using 2 bolts HM 12 x 25 + flat washers.

Step twenty seven

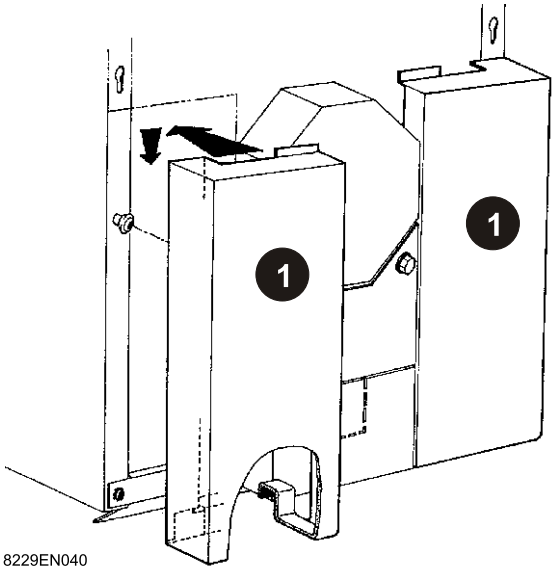

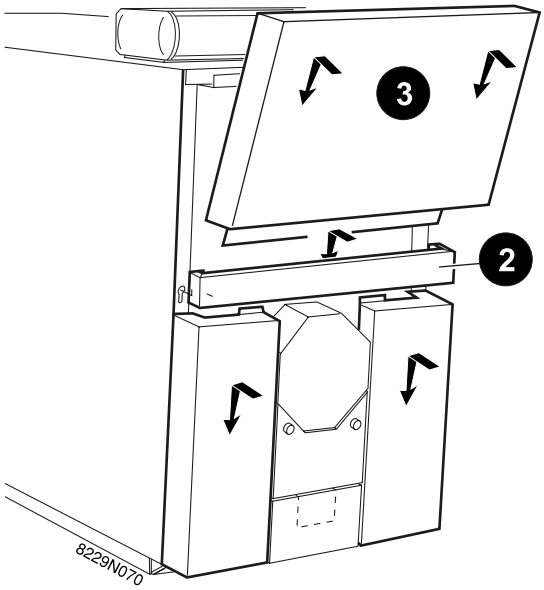

❶ Hook the left and right lower front panels on the side panel slots.

❷ Hook the front casing support (2 slots).

❸ Position the upper front cover in the front casing support, and hook it in the front top cover.

Step twenty eight : Data plate

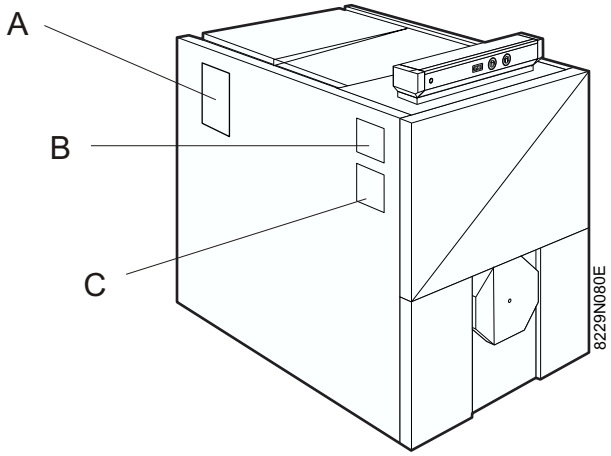

- Stick the data plates and the warning label on the casing of the boiler on a visible location.

A : Stick data plate

B : Stick English warning label

C : Stick French warning label

1 Dimensional information required

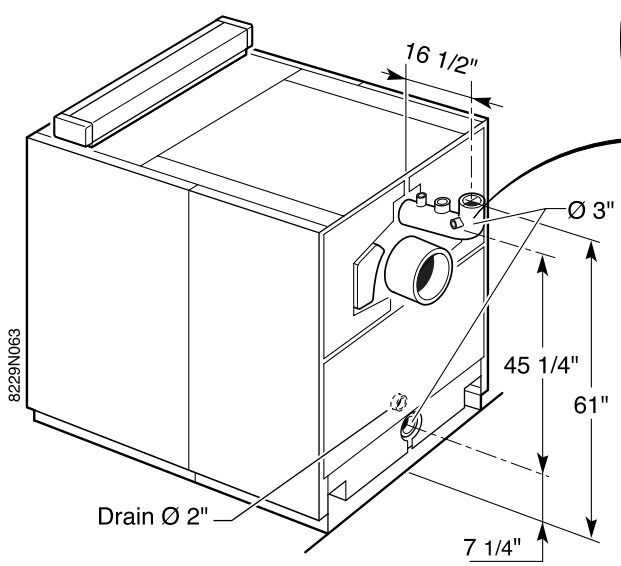

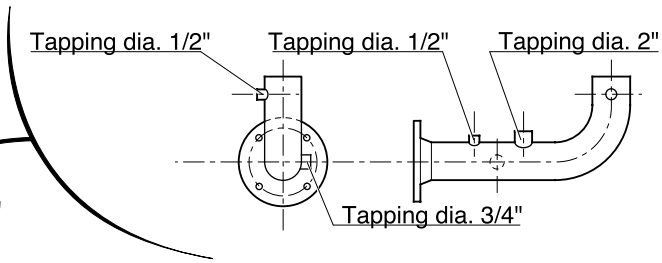

A pressure relief device must be installed, the the relief must be of the same capacity as the appliance it is installed. The relief valve must be installed to discharge hot water to the nearest drain that would avoid personal injury and property damage. The installation of the relief valve must conform to all national and local codes having jurisdiction.

Hot water boilers installed above the radiation level or as required by authority having jurisdiction, must be equipped with a low water cutoff device.

Suitable means to protect the boiler controls and burner from indigestion of water.

WARNING

Improper installation, adjustment, alteration, service or maintenance can cause property damage, personal injury or loss of life. Refer to the user's information manual provided with this boiler. Installation and service must be performed by a qualified installer, service agency or the gas supplier.

This boiler must be installed in accordance with local codes, if any; if not, follow CAN/CGA B149, Installation Codes, as applicable.

This boiler needs fresh air for safe operation and must be installed so there are provisions for adequate combustion and ventilation air.

This boiler must be properly vented.

This appliance may require a special venting system. Refer to chimney or vent installation instructions.

FOR YOUR SAFETY

Do not store or use gasoline or other flammable vapors and liquids in the vicinity of this or any other appliance.

ATTENTION

Une installation, un réglage, des modifications, un entretien ou une maintenance inadéquats peuvent entraîner des dommages matériels, des blessures ou la mort. Consultez le manuel de l'utilisateur qui vous a été fourni avec cette chaudière. L'installation et l'entretien doivent être effectués par un installateur qualifié, une institution de service ou le fournisseur de gaz.

Cette chaudière doit être installée conformément aux codes locaux, si existants ; si ce n'est pas le cas, elle doit se conformer aux codes d'installation CAN/CGA B149, selon les cas.

Pour assurer un fonctionnement sûr, cette chaudière doit recevoir un apport d'air frais ; elle doit être installée de façon à disposer d'un air de combustion et de ventilation adéquat.

La chaudière doit être adéquatement ventilée.

Cet appareil électrique peut nécessiter un système de ventilation particulier. Consultez les consignes d'installation de la cheminée ou des évents.

POUR VOTRE PROPRE SÉCURITÉ

N'entreposez pas et n'utilisez pas d'essence, non plus que de vapeur ou de liquides inflammables dans les environs de cet appareil ou de tout autre appareil électrique.

2 Recommendations

The installation must be made in accordance with codes in effect.

An expansion tank has to be connected to the system.

Safety valve must be connected to the boiler piping without any valve or stop installed between the device and the boiler.

Pressure reducing valve and back flow preventer on boiler make up water feed.

The boiler when used in connection with a refrigeration system must be installed so the chilled medium is piped in parallel with the boiler with appropriate valves to prevent the chilled medium from entering the boiler.

The boiler piping system of hot water boiler connected to heating coils located in air handling units where they may be exposed to refrigerated air circulation must be equipped with flow control valves or other automatic means to prevent gravity circulation of the boiler water during the cooling cycle.

3 Filling

The boiler may be filled using the drain tap or water make-up system. Filling should be done at a slow flow rate in order to purge all the air contained in the system through air vents installed at the system high points. Filling is always done with circulating pumps stopped.

4 Typical Boiler Piping Layout

Example of installation :

The example below does not cover all the possible cases of use. It is only aimed at drawing attention to the basic rules which must be complied with. In all events, comply with applicable codes of practice and national or local regulations.

Example of a GT 400 boiler with domestic hot water production via one or more independent calorifiers.

A pressure relief valve is required, the relief valve must be rated for the same capacity as the appliance. The relief must be a certified type by ASME/CSA B51. The relief must be piped to discharge hot water to the nearest drain, they will avoid personal injury or property damage. The relief must be installed in accordance to local and national codes having jurisdiction.

Hot water boiler above the radiation level or as required by authority having jurisdiction, must be equipped with a low water cutoff device.

Suitable protection to avoid indigestion of water shall be provided to the boiler controls and burners.

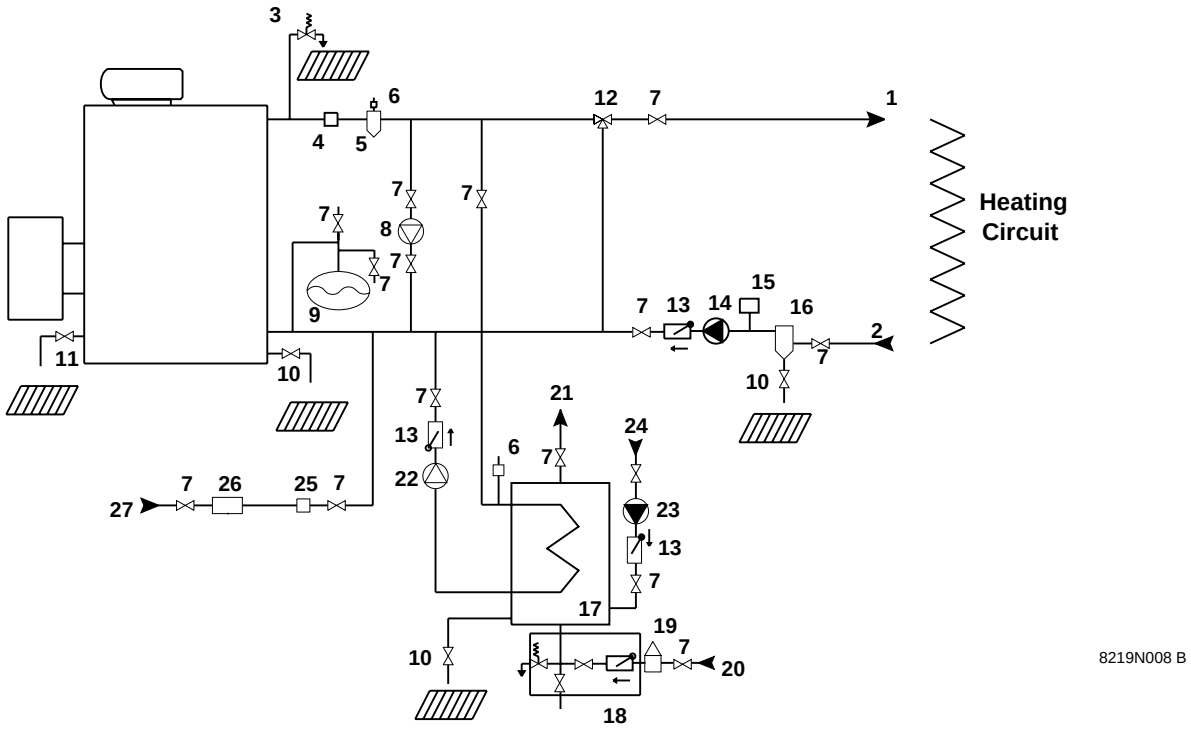

1. Heating flow
2. Heating return
3. Safety relief valve and pressure gauge
4. Flow switch
5. Air separator
6. Automatic venting valve
7. Valve
8. Recycling pump
9. Expansion vessel
10. Draining valve
11. Sludge removal valve
12. Mixing valve
13. Non return valve
14. Heating pump
15. Low-water cutoff safety device [as required by code]
16. Sludge decanting pot (particularly recommended for older heating systems)
17. Independent calorifier
18. Temperature & pressure relief device
19. Pressure reducer
20. Domestic cold water inlet
21. Domestic hot water outlet
22. Load pump
23. Domestic hot water circulation pump (optional)
24. DHW circulation loop return
25. Water meter (if any)
26. Water treatment if TH > 25°
27. Heating circuitfilling (with disconnector if required under applicable regulations).

5. Boiler Venting & Chimney General

Caution & Warning:

It is advised and recommended that the heating contractor-professional apply vent materials that are approved and agency listed. Installation of any venting must follow all local codes in conjunction with vent manufacturer instructions and appliance manufacturer instructions.

All De Dietrich GT series oil-gas fired cast iron boilers are high performance boilers that could operate under all 4 vent categories as established by ANSI Z21.13/CSA 4.9 Standard. To assist with application where the vent category is unknown a graph below has been provided to assist you in determining the vent category and what venting materials would be acceptable. Although the gas vent categories were developed specifically for gas fired appliances, using this information is helpful for oil fired boilers. It is very important the venting be selected according to the conditions that the boiler will operate under, minimum and maximum firing conditions of the boiler must be respected. The venting installed must comply and be certified to all applicable codes and standards for each jurisdiction.

Gas-Vent Category [4] Definitions:

Cat. I
A Boiler, which operates with a non-positive vent (breech) pressure and flue gas temperatures which avoids excessive condensation production in the chamber and venting.

Cat. II
A Boiler, which operates with a non-positive vent (breech) pressure and flue gas temperatures produce condensation production in the chamber and venting.

Cat. III
A Boiler, which operates with a positive vent (breech) pressure and flue gas temperatures which avoids excessive condensation production in the chamber and venting.

Cat. IV
A Boiler, which operates with a positive vent (breech) pressure and flue gas temperatures produces condensation production in the chamber and venting.

Chart A

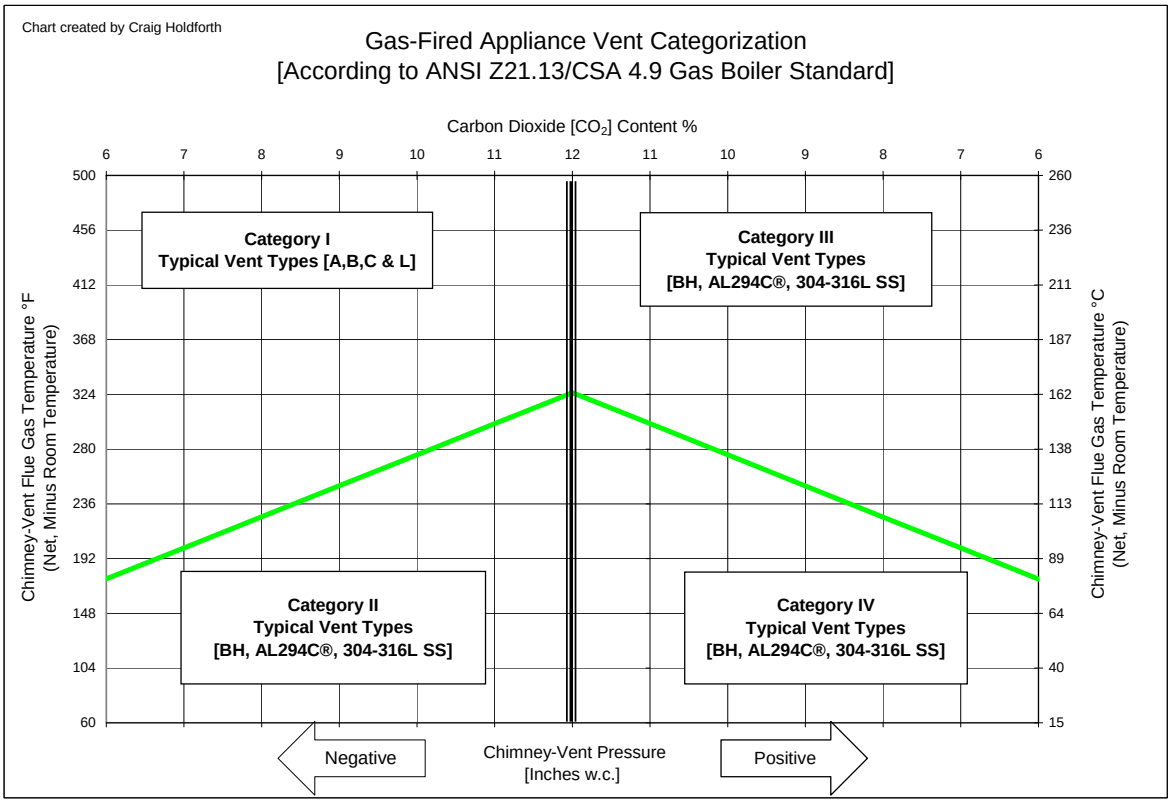

5.1 Boiler Venting – Category I & II Typical Layouts and Requirements.

Caution & Warning:

Improperly sealed venting system could result in carbon monoxide [CO] poisoning; ensure adequate support and fastening of the system. Ensure venting can safely exhaust all flue gases outside in an effective manner. These systems must operate under a negative vent pressure condition that is stable.

Warning & Cautions for Co-Venting:

Co-venting with other appliances shall conform latest ANSI Z223.1 & CAN/CGA 149 installation codes, any improper operation shall be corrected, the common venting shall be sized according to the appropriate tables in Part II of the above mentioned codes.

Category I Vent Systems Requirements:

1. Flue gas temperatures above the green line shown in chart A.
2. Approved type of venting for category I appliances.
3. A barometric draft control maybe employed as required, but is not necessary for correct boiler operation. Consult a chimney-vent specialist for correct application and usage.
4. Breeching and chimney vent sized in accordance to local and national codes or by good engineering methods.
5. Vent safety device equipped on the venting or as equipped on burner.
6. Condensate TEE fitting supplied on the boiler breeching as close as possible and be orientated to avoid accumulation of flue gas condensation in the boiler or venting is also used to determine flue gas emissions.

Category II Vent Systems Requirements:

1. Flue gas temperatures below the green line shown in chart A.
2. Approved type of venting for category II appliances.
3. A barometric draft control maybe employed as required, but is not necessary for correct boiler operation. Consult a chimney-vent specialist for correct application and usage.
4. Breeching and chimney vent sized in accordance to local and national codes or by good engineering methods.
5. Vent safety device equipped on the venting or as equipped on burner.
6. Condensate TEE fitting supplied on the boiler breeching as close as possible and be orientated to avoid accumulation of flue gas condensation in the boiler or venting is also used to determine flue gas emissions.

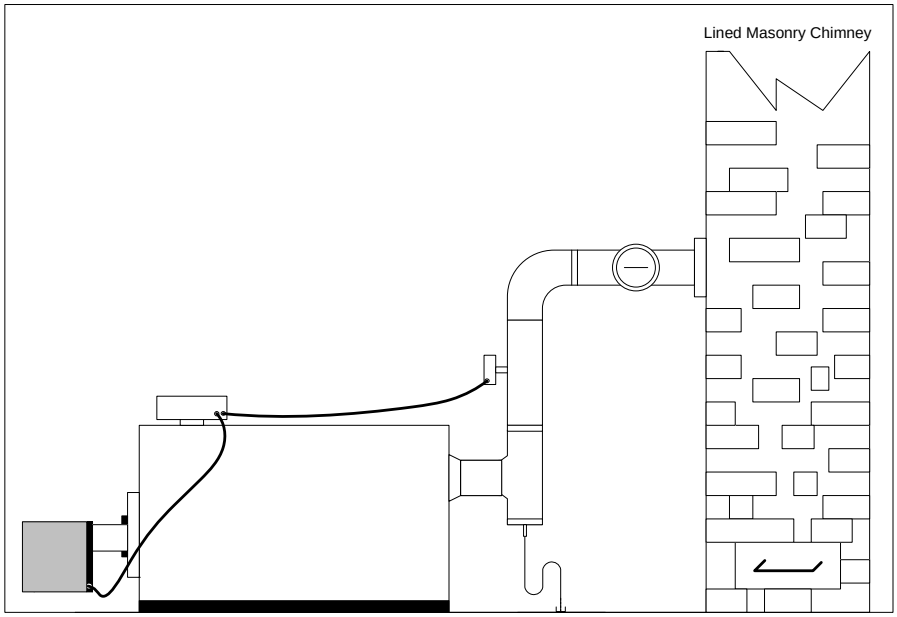

Caution-Warning:

Flue gas condensation is very aggressive and corrosive which could lead to failure of the venting system or drains, consult local and national codes regarding flue gas condensation disposal. The P-trap assembly must be properly filled with water to avoid escape of flue gas emissions. The flue gas condensation may require neutralization prior to entering the drain.

5.2 Boiler Venting – Category III & IV Vent Systems Typical Layouts and Requirements.

Caution & Warning:

Improperly sealed venting system could result in carbon monoxide [CO] poisoning; ensure adequate support and fastening of the system. Ensure venting can safely exhaust all flue gases outside in an effective manner. These systems must operate under a positive vent pressure condition that is stable.

Warning & Cautions for Co-Venting:

Co-venting with other appliances shall conform latest ANSI Z223.1 & CAN/CGA 149 installation codes, any improper operation shall be corrected, the common venting shall be sized according to the appropriate tables in Part II of the above mentioned codes.

Category III Vent Systems Requirements:

1. Flue gas temperatures above the green line shown in chart A.
2. Approved type of venting for category III appliances
3. Breeching and chimney diameter sized in accordance to national & local codes or by good engineering methods.
4. Vent safety device equipped on burner [MR]
5. Condensate TEE fitting supplied on the boiler breeching as close as possible and be orientated to avoid accumulation of flue gas condensation in the boiler or venting.

Category IV Vent Systems Requirements:

1. Flue gas temperatures below the green line shown in chart A.
2. Approved type of venting for category IV appliances
3. Breeching and chimney diameter sized in accordance to national & local codes or by good engineering methods.
4. Vent safety device equipped on burner [MR]
5. Condensate TEE fitting supplied on the boiler breeching as close as possible and be orientated to avoid accumulation of flue gas condensation in the boiler or venting.

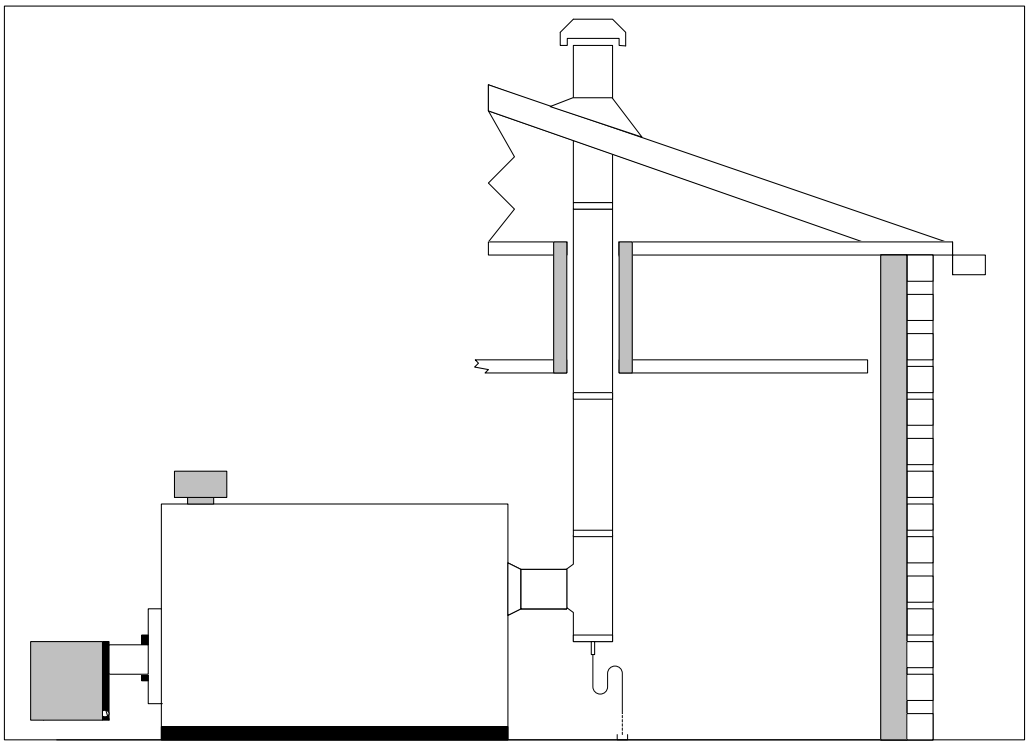

Caution-Warning:

Flue gas condensation is very aggressive and corrosive which could lead to failure of the venting system or drains, consult local and national codes regarding flue gas condensation disposal. The P-trap assembly must be properly filled with water to avoid escape of flue gas emissions. The flue gas condensation may require neutralization prior to entering the drain.

5.3 Boiler Venting – Side-Wall or Direct Vent Systems Typical Layouts and Requirements.

Caution & Warning:

Improperly sealed venting system could result in carbon monoxide [CO] poisoning; ensure adequate support and fastening of the system. Ensure venting can safely exhaust all flue gases outside in an effective manner. These systems must operate under a positive vent pressure condition that is stable. Do not Co-Vent with any other appliance, the venting system was designed for single appliance venting only.

Side-wall & Direct Vent Systems:

These systems do not fall under any of the gas vent categories, these systems are pre-engineered. These applications of this venting system must be followed exactly, for safe, efficient and trouble free operation.

System Requirements:

1. Venting sized accordance to direct vent table
2. Type “BH” [AL294C®] vent material
3. Condensate TEE fitting supplied on the boiler breeching as close as possible and be orientated to avoid accumulation of flue gas condensation in the boiler or venting is also used for determining flue gas emissions.
4. Vent termination TEE
5. Vent safety device equipped on burner [MR]

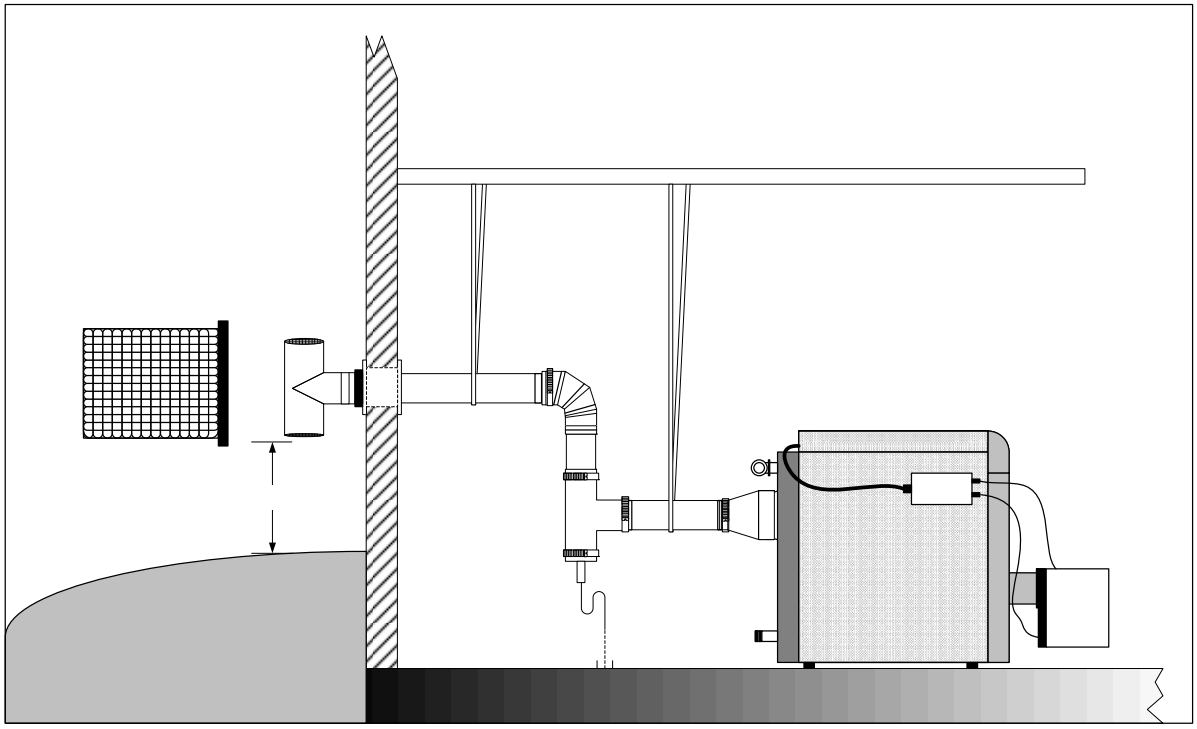

Vent Termination Locations & Warning – See Section 5.5

Caution-Warning:

Flue gas condensation is very aggressive and corrosive which could lead to failure of the venting system or drains, consult local and national codes regarding flue gas condensation disposal. The P-trap assembly must be properly filled with water to avoid escape of flue gas emissions. The flue gas condensation may require neutralization prior to entering the drain.

5.4 Boiler Venting – Side-wall or Direct Vent Systems Sizing Tables & Vent Safety Device

- All venting lengths must be calculated to equivalent lengths, all application must include at least one 90° elbow
- Venting must be a type 'BH" [AL294C® material]
- Maximum vent length [equivalent] = 30 ft. [9m]
- Minimum vent length [equivalent] 5 ft. [1.5m]
- Maximum number of 90° elbows = 2 or 3 45° elbows, each 90° elbow is equivalent to 10 ft. or straight pipe, the 45° elbow is equivalent = 5 ft.
- Condensate TEE must be provided [equivalent length = 7 ft.]
- Appliance reducing adapter [equivalent length 3 ft.]
- Sealed combustion, combustion air intake sizing, must be sized according to the burner manufacturers instructions
- Vent [breeching] pressure shall not exceed 0.20 inches w.c. [0.50 mbar]
- Vent termination must be a TEE type, follow warning regarding termination locations. Do not include the termination TEE length in the vent length calculation.
- Venting shall be sloped, so any condensation developed will drain through the condensate TEE fitting
- Vent safety device, differential air pressure switch [manual reset] NC switch opens on rise of pressure.
- Optional function of power burners which can employ an post purge function to exhaust flue gases for a fixed time [1 minute to 4 minutes maximum]
- Burner employing a standby air damper closed position, the closed position should be slightly opened to allow hot flue gases to escape upward through venting and not be entrapped in the combustion head. Important note, that in negative building pressures, the observation and odor of flue gases may enter the boiler room.

Determining vent length [equivalent] Example:

Appliance reducing adapter	[x1] = 3 ft.
Condensate TEE	[x1] = 7 ft.
12" vent straight vent pipe	[x3] = 3 ft.
Elbow 90°	[x1] = 10 ft.
Termination TEE	[x1] = 0 ft.
Length [equivalent] =	23 ft.

GT 300 A/II Series

Model	Boiler Connection ø	Oil-Gas Vent ø	[Δp] Pressure switch Setting [inches w.c.]
GT 304 A/II	7 inch	5 inch	Set vent safety pressure switch 150% above burner gas manifold or head pressure setting
GT 305 A/II	7 inch	5 inch	
GT 306 A/II	7 inch	5 inch	
GT 307 A/II	8 inch	6 inch	
GT 308 A/II	8 inch	6 inch	
GT 309 A/II	8 inch	6 inch	

GT 400 A Series

Model	Boiler Connection ø	Oil-Gas Vent ø	[Δp] Pressure switch Setting [inches w.c.]
GT 408 A	10 inch	8 inch	Set vent safety pressure switch 150% above burner gas manifold or head pressure setting
GT 409 A	10 inch	8 inch	
GT 410 A	10 inch	8 inch	
GT 411 A	12 inch	10 inch	
GT 412 A	12 inch	10 inch	
GT 413 A	12 inch	10 inch	
GT 414 A	12 inch	10 inch	

GTE 500 A Series

Model	Boiler Connection ø	Oil-Gas Vent ø	[Δp] Pressure switch Setting [inches w.c.]
GTE 515 A	16 inch	12 inch	Set vent safety pressure switch 150% above burner gas manifold or head pressure setting
GTE 516 A	16 inch	12 inch	
GTE 517 A	16 inch	12 inch	
GTE 518 A	16 inch	12 inch	
GTE 519 A	16 inch	12 inch	
GTE 520 A	16 inch	12 inch	

Model	Boiler Connection ø	Oil-Gas Vent ø	[Δp] Pressure switch Setting [inches w.c.]
GTE 521 A	16 inch	12 inch	Set vent safety pressure switch 150% above burner gas manifold or head pressure setting
GTE 522 A	18 inch	14 inch	
GTE 523 A	18 inch	14 inch	
GTE 524 A	18 inch	14 inch	
GTE 525 A	18 inch	14 inch	

5.5 All Side-wall and direct Vent termination locations installation precautions:

Warning/Caution:

In all cases avoid potential vent termination locations where excess debris or snow could accumulate and bock the vent termination to any degree.

Minimum clearance of 4 ft. [1.22m] horizontally from, and in no case above or below, unless a 4 foot [1.22m] horizontal distance is maintained, from electric meters, gas meters, regulators & relief equipment.

Do Not Co-Vent Any Direct Vent or Sidewall Venting System

B149.1 (GAS INSTALLATIONS CANADA)

A VENT SHALL NOT TERMINATE…..

Directly above a paved sidewalk or driveway which serves 2 buildings.
Less than 7 ft. any paved sidewalk or drive way
Less than 6 ft. of a combustion air inlet to any building
Less than 4 ft. above a meter/regulator assembly [horizontally] of the vertical center-line of the regulator vent outlet to a maximum vertical distance of 15 ft.
Less than 4 ft. of any gas service regulator vent outlet
Less than 1 ft. above grade or normal anticipated snow level for the area
Less than 3 ft. from windows, doors [that can be opened], combustion air supply or any appliance or building.
Underneath a veranda, porch or deck unless:

1. The veranda, porch or deck is fully open on a minimum of 2 sides beneath the floor &
2. The distance between the top of the vent termination and the underside of the veranda, porch or deck is greater than 1 ft.

B139-00 (OIL INSTALLATIONS CANADA)

A VENT SHALL NOT TERMINATE…..

Directly above a paved sidewalk or driveway which serves 2 buildings.
Less than 7 ft. any paved sidewalk or drive way
Less than 6 ft. from an open-able window, door or mechanical combustion air supply
Less than 6 ft. of any combustion air inlet
Less than 3 ft. of the vertical centerline of the meter/regulator assembly on a horizontal plane perpendicular to the regulator
Less than 6 ft. of gas service regulator vent outlet
Less than 4 ft. of oil tank vent or oil tank fill inlet
Less than 1 ft. above grade or normal anticipated snow level for the area.
Within 6 ft. of a property line
Underneath a veranda, porch or deck
Flue gases are within 6 ft. of combustible material or any openings of surrounding buildings.
Less than 3 ft. from an inside corner or L-shaped structure
Where flue gases may be directed towards brickwork, siding or other construction that may cause damaged from heat or condensate from the flue gases.

NFPA 54 / ANSI Z223 (GAS INSTALLATIONS USA)

A VENT SHALL NOT TERMINATE…..

Less than 3 ft. of any combustion air inlet source located within 10 ft.
Less than 1 ft. from any obstructions
Less than 1 ft. above grade or normal anticipated snow level for the area.
Over public walkways, driveways or other areas where condensate or vapor could create nuisance or hazard or could be detrimental to the operation of regulators, relief's, valves or other equipment

NFPA 31 (OIL INSTALLATIONS USA)

A VENT SHALL NOT TERMINATE…..

Less than 5 ft. from vent outlet of the supply tank
Less than 7 ft. above walkways
Less than 1 ft. from any door, window or air inlet source
Less than 1 ft. from grade or snow level.
Less than 3 ft. from a air intake that is within 10 ft
Less than 1 ft. from soffit of the roof
Less than 3 ft. from any building corner or L shape structure

WARNING-CAUTION
Consult Local Codes & Authorities for other Requirements not mentioned

2 Replacement procedures

- When an existing boiler is removed from a common venting system, the common venting system is likely to be too large for proper venting of the appliances remaining connected to it.
- At the time of removal of the existing boiler, the following steps shall be followed with each appliance remaining connected to the common venting system placed in operation, while the other appliances remaining connected to the common venting system are not in operation.

(a)Seal any unused openings in the common venting system,

(b)Visually inspect the venting system for proper size and horizontal pitch and determine there is no blockage or restriction, leakage, corrosion and other deficiencies which could cause an unsafe condition,

(c)Insofar as is practical, close all building doors and windows and all doors between the space in which the appliances remaining connected to the common venting system are located and the other spaces of the building. Turn on clothes dryers and any appliance not connected to the common venting system.

Turn on any exhaust fans such as range hoods and bathroom exhausts, so they will operate at the maximum speed.

Do not operate a summer exhaust fan. Close fire place dampers.

(d)Place in operation the appliance being inspected. Follow the lighting instructions. Adjust thermostat so appliance will operate continuously,

(e)Test for leakage at the draft hood relief opening after 5 minutes of main burner operation.

(f)After it has been determined that each appliance remaining connected to the common venting system properly vents when tested as outlined above, return doors, windows, exhaust fans, fireplace dampers and any other gas-burning appliance to their previous condition of use,

(g)Any improper operation of the common venting system should be corrected so the installation conforms with the National Fuel Gas Code, ANSI Z223.1 and/or CAN/CGA B149 Installation Codes. When resizing any of the common venting system, the common venting system should be resized to approach the minimum size as determined using the appropriate tables in Part II of the National Fuel Gas Code, ANSI Z223.1 and/or CAN/CGA B149, Installation Codes.

(h)The minimum distance from adjacent public walkways, adjacent buildings, openable windows and building openings shall not be less than those values specified in the National Fuel Gas Code ANSI Z223.1 and/or CAN/CGA B149, Installation Codes.

3 Dimensional information required for connection of the boiler

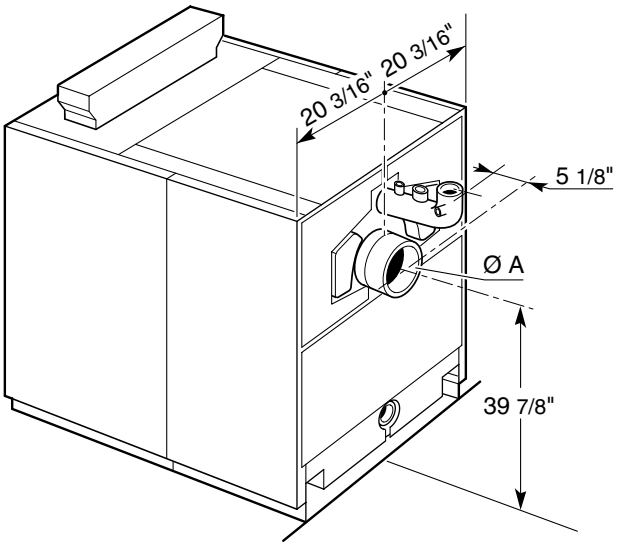

The boiler must be connected to a venting system that safely discharges all flue gases to the outside in an effective manner.

The sizing of the boiler breeching and chimney venting must follow local and national code requirements.

	GT 408 A to GT 410 A	GT 411 A to GT 414 A
Ø A	10"	12"

1 Specific technical information supplied with the burner

- The boiler and its individual shutoff valve must be disconnected from the gas supply piping system during any pressure testing of that system at test pressures in excess of 1/2 psi (3.5kPa),
- The boiler must be isolated from the gas supply piping system by closing its individual manual shutoff valve during any pressure testing of the gas supply piping system at test pressures equal to or less than 1/2 psi (3.5 kPa),
- The boiler shall be installed such that the gas ignition system components are protected from water (dripping, spraying, rain, etc.) during appliance operation and service (circulator replacement, condensate trap, control replacement, etc.),
- The boiler and its gas connection must be leak tested before placing the boiler in operation,
- After placing the boiler in operation, the ignition system safety shutoff device must be tested,
- Provision for vent, bleed and gas relief lines (when applicable),
- A sediment trap must be provided upstream of the gas controls,
- Location of manual main shutoff valve outside the jacket when codes require.

Follow the information and documentation as supplied with the burner, regarding:

The specific installation requirements, wiring, fuel supply and piping and all adjustments of the air and fuel and start-up procedure as be followed as supplied with the burner documentation

Consult the burner manufacturer regarding the required maintenance of the burner and the service intervals.

The entire heating system must be check once each heating season.

Do not start the burner/boiler unless all access cover and panels are in place.

1 Wiring

Wiring in accordance with the requirements of the authority having jurisdiction or, in the absence of such requirements, with the Canadian Electrical Code Part 1, CSA C22.1, Electrical Codes.

Warning-Caution
Label all wires prior to disconnecting when servicing controls.
Wiring errors can cause improper and dangerous operation.

"Verify Operation After Servicing"

2 Wiring procedure

De Dietrich boiler suggested field wiring procedure.

1 : Top view

2 : Boiler panel

3 : Front

A : Race ways located under top panel of boiler

B : Wiring to be run in electrical race way to boiler control panel from ancillaries

Main power to 4x4 junction box or enter rear of boiler through race way.

C : 4x4 junction box location

D : Run BX cable between insulation and casing from boiler panel

E : Allow extra cable to swing burner open

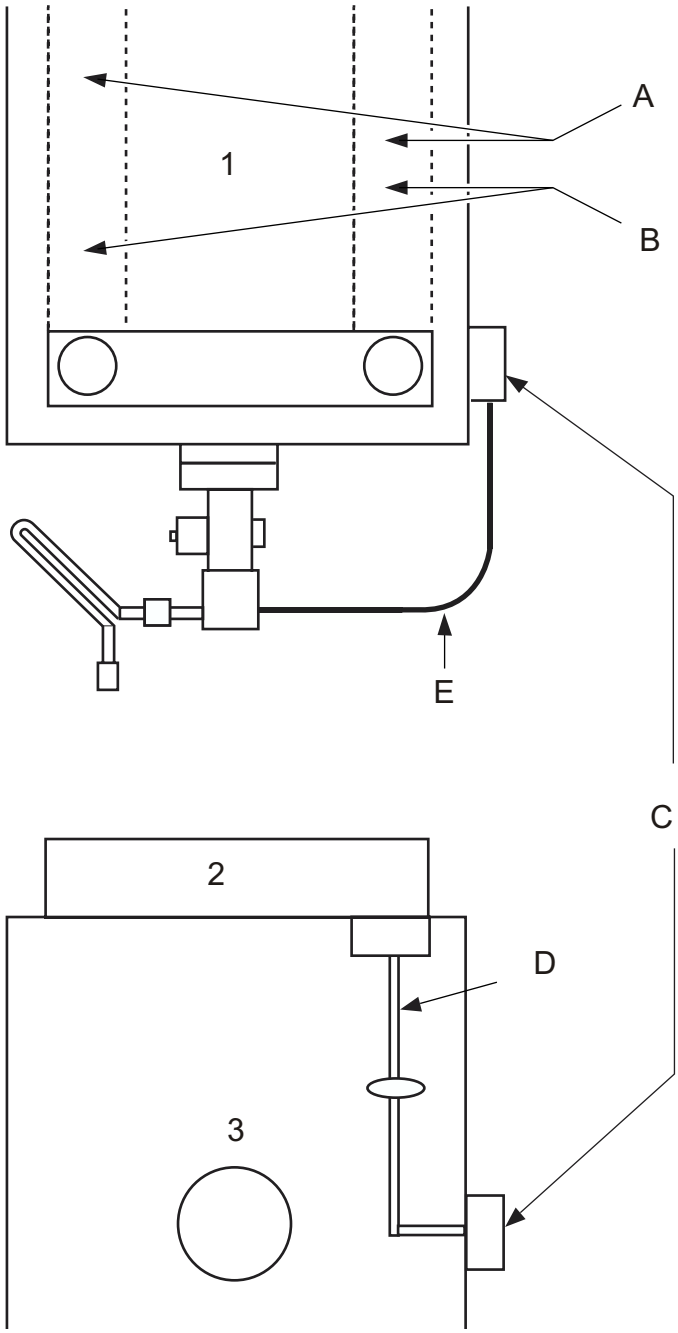

FOR YOUR SAFETY READ BEFORE OPERATING

WARNING: If you do not follow these instructions exactly, a fire or explosion may result causing properly damage, personal injury or loss of life.

A. This appliance does not have a pilot. It is equipped with an ignition device wich automatically lights the burner. Do not try to light the burner by hand.

B. BEFORE OPERATING smell all around the appliance area for gas. Be sure to smell next to the floor because some gas is heavier than air and will settle on the floor.

WHAT TO DO IF YOU SMELL GAS

- Do not try to light any appliance.
- Do not touch any electric switch; do not use any phone in your building.
- Immediately call your gas supplier from a neighbor's phone. Follow the gas supplier's instructions.
- If you cannot reach your gas supplier, call the fire department.

C. Use only your hand to push in or turn the gas control knob. Never use tools. If the knob will not push in or turn by hand, don't try to repair it, call a qualified service technician. Force or attempted repair may result in a fire or explosion.

D. Do not use this appliance if any part has been under water. Immediately call a qualified technician to inspect the appliance and to replace any part of the control system and any gas control which has been under water.

POUR VOTRE SÉCURITÉ, LISEZ CECI AVANT LE DÉMARRAGE

AVERTISSEMENT : si vous ne suivez pas exactement ces instructions, il y a risque de feu ou d'explosion causant dommages à la propriété, blessures ou pertes de vie.

A. Cet appareil n'a pas de veilleuse et est équipé d'un système d'allumage automatique. Ne pas essayer d'allumer ce brûleur manuellement.

B. AVANT OPÉRATION vérifier autour de l'appareil pour des senteurs de gaz. Assurez-vous de sentir près du plancher car certains gaz sont plus lourds que l'air et vont s'accumuler au plancher.

QUE FAIRE S'IL Y A ODEUR DE GAZ ?

• Ne pas essayer d'allumer tout appareil.

• Ne pas toucher un interrupteur électrique.

Ne pas utiliser de téléphone dans votre immeuble.

• Téléphonez immédiatement votre fournisseur de gaz à partir du téléphone d'un immeuble voisin. Suivez les instructions de votre fournisseur de gaz.

• Si vous ne pouvez pas contacter votre fournisseur de gaz, contactez les pompiers.

C. Utilisez uniquement votre main pour pousser ou tourner le bouton de contrôle du gaz. Ne jamais utiliser d'outils. Si le bouton ne peut être poussé ou tourné manuellement, ne pas essayer de le réparer : contactez un technicien de service certifié. Forcer le bouton ou essayer de le réparer peut occassionner un feu ou une explosion.

D. Ne pas utiliser cet appareil si toute partie a été submergée sous l'eau. Contactez immédiatement un technicien de service certifié pour inspecter l'appareil et remplacer toute pièce du système de contrôle, ou tout autre contrôle de gaz qui aurait été sous l'eau.

- Inspect for proper baffling insertion into flue passes. All clean-out doors properly sealed. Burner door closed and properly latched.
- Gas and oil systems ready. Proper vent connections. Required combustion and ventilation air provided.
- Waterside of system properly filled and vented of air.
- Lighting instruction followed.
- To be performed by a licensed tradesperson in accordance with the guidelines shown in this manual. Follow burner manufactures instructions.
- Mandatory factory start-up report to be completed and returned to comply with the warranty process.
- Proper operating instructions of equipment to be related to operating personnel.

1 Shut-down procedures

Disengage all electrical power switches to heating system burners, pumps. Isolate all boiler valves and fuel valves.

For off-season shutdown, open boiler combustion flue aways and clean. Ensure venting, chimney, combustion and ventilation air openings free from blockage. Do not drain waterside of system.

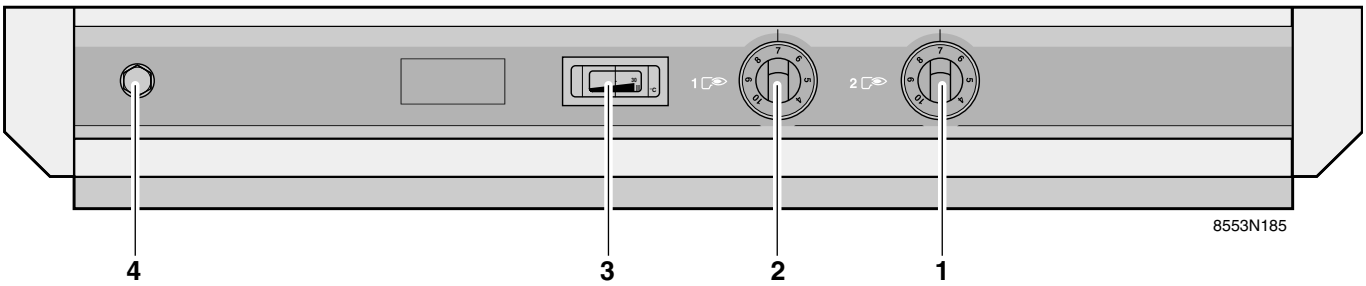

1.BOILER OPERATING TEMPERATURE CONTROL graduated from (# 4-10) 104f-210f. factory preset at (# 7) 158f. to adjust, remove knob by pulling outwards. Using a pair of pliers pull white pin and relocate to desired setting.

2.LIMIT CONTROL same graduations as the NO.1 control apply.

3.BOILER TEMPERATURE INDICATOR

4.HIGH LIMIT MANUAL RESET: to reset remove knob, using a thin screwdriver insert into opening and push it. Replace knob.

OPERATING PRINCIPLE OF CONTROLS adjust boiler operating temperature settings using control marked operator NO.1.

Control marked NO.2 is the high limit with it set point adjusted above operator setting.

(see electrical diagram inside boiler panel)

START UP following the operating principle of the controls and confirming completed circuit of other external limits. Apply power for system start up.

DDR AMERICAS INC.

DE DIETRICH THERMIQUE

Control dial temperature settings

Dial #	4	5	6	7	8	9	10
Temp F	104	122	140	158	176	194	210

Important : (in the absence of bas) Do not set controls below the number 5 (122f) setting.

1 Boiler

It is not advisable to drain an installation, except in case of absolute necessity. Check the water level of the installation and top it off if necessary, avoiding a sudden inlet of cold water in the hot boiler.

This operation can only be done a few times a year ; otherwise, look for the leakage and remedy it without delay.

The good performance of the boiler depends on cleanliness.

Cleaning of the boiler must be carried out as often as required and at least, as for the chimney once a year or more, according to the regulations in force.

The following operations are always carried out with the boiler and **the power supply shut off**.

Cleaning flue gas passes :

For this purpose :

- switch off the electricity supply to the boiler, let boiler cool.
- unhook the front cover,
- open the clean-out door (upper door) by unscrewing the 4 lock nuts.
- remove the baffles
- using the brush supplied, carefully sweep the 6 flue sections
- also brush the turbulator, baffles and the front face
- if possible use a vacuum cleaner
- put the turbulator, baffles back in place

(**pay attention to their direction**)

- shut the door.

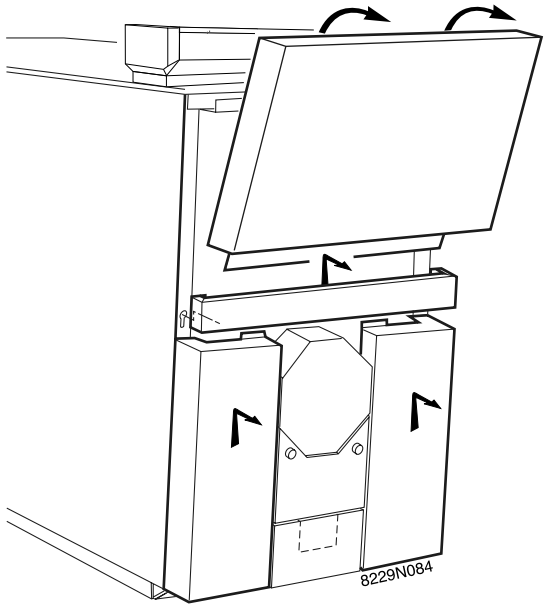

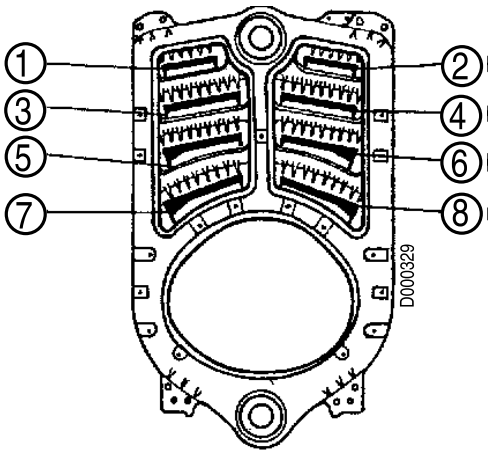

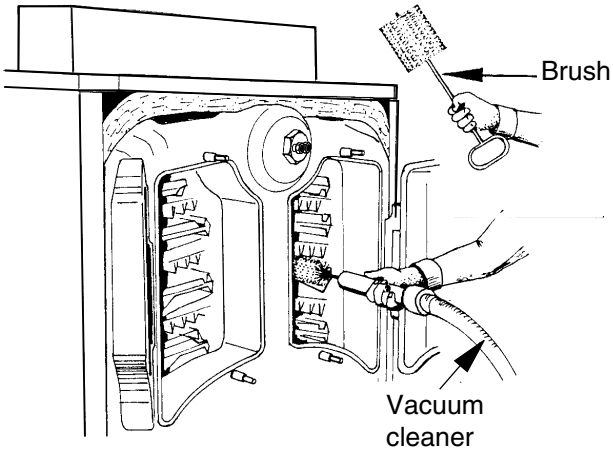

Baffles		GT 408 A pack CS30	GT 409 A - 410 A pack CS31	GT 411 A pack CS36	GT 412 A pack CS34	GT 413 A - GT 414 A pack CS35
Upper	❶ ❷	1 x 8229-0010 1 x 8229-0022	2 x 8229-0010	2 x 8229-0010 1 x 8229-0022	2 x 8229-0010 1 x 8229-0022	3 x 8229-0010
Middle	❸ ❹	1 x 8229-0011 1 x 8229-0023	2 x 8229-0011	2 x 8229-0011 1 x 8229-0023	2 x 8229-0011 1 x 8229-0023	3 x 8229-0011
Lower	❺ ❻ ❼ ❽	1 x 8229-0012 1 x 8229-0024	2 x 8229-0012	1 x 8229-0012 1 x 8229-0024	2 x 8229-0012	2 x 8229-0012

- **Maintenance of the combustion chamber**

- open the burner door (lower door) by unscrewing 4 lock nuts (19 mm spanner)
- brush the inside of the combustion chamber
- using a vacuum cleaner, vacuum up the soot deposits accumulated in the combustion chamber
- close the door and replace the front cover

- **Cleaning the smoke box (Flue Hood)**

- remove the left and right hand clean-out sweeping covers of the smoke box (2 H12 nuts + washers - 19 mm spanner) and remove the soot using a vacuum cleaner
- replace the sweeping covers.

A : Vacuum Cleaner

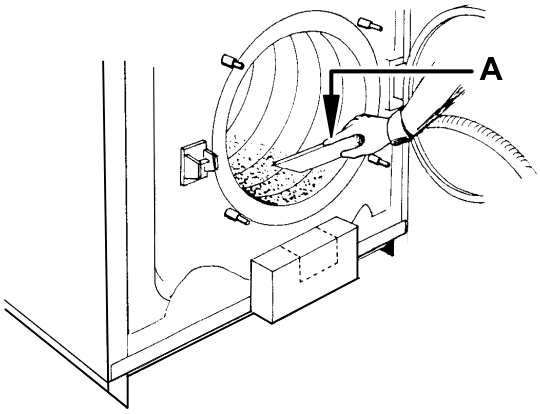

8229N038

- **Burner maintenance**

In accordance with the directions supplied with the burner.

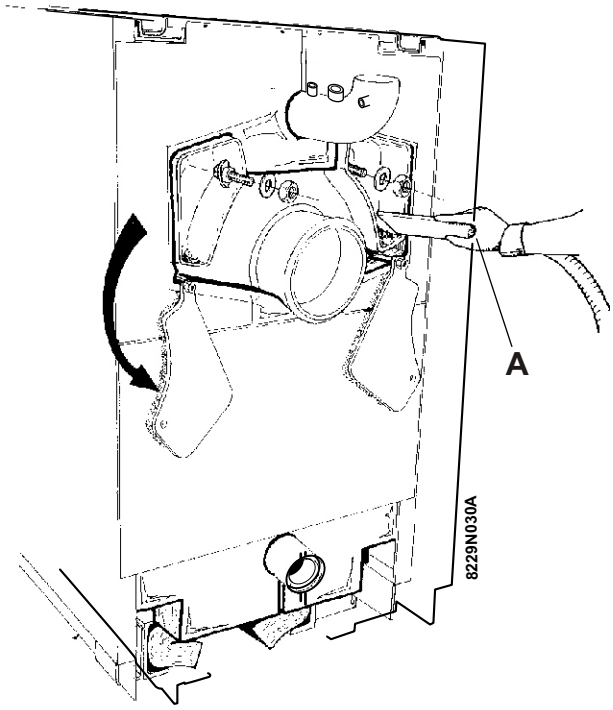

2 Shut down procedure

- The boiler and the chimney must be carefully cleaned.
- Shut the boiler doors to avoid any air flow inside.
- If the boiler has been stopped for several months, we also advise removing the flue connection and cap it.
- Shut off the fuel shut off valves

- Require annual system inspection of the heating boiler, burner and controls by qualified service personnel,
- Heating system check for safety control functions, system pressure, leaks, combustion and ventilation air should be done on a monthly schedule.

Extended Shutdown Periods

If the system is to be shutdown for any extended period of time, please follow these steps:

1. Shut off all pumps
2. Cap off venting of boiler at the boiler collars
3. Shut off supply & Return Valves
4. Shut off the fuel supply valves
5. Disconnect power at the panel
6. Clean boiler and venting

82274096E

when ordering spare parts, do not forget to state **the code number given opposite the description of the required part in the liste**.

BOILER BODY AND ACCESSORIES

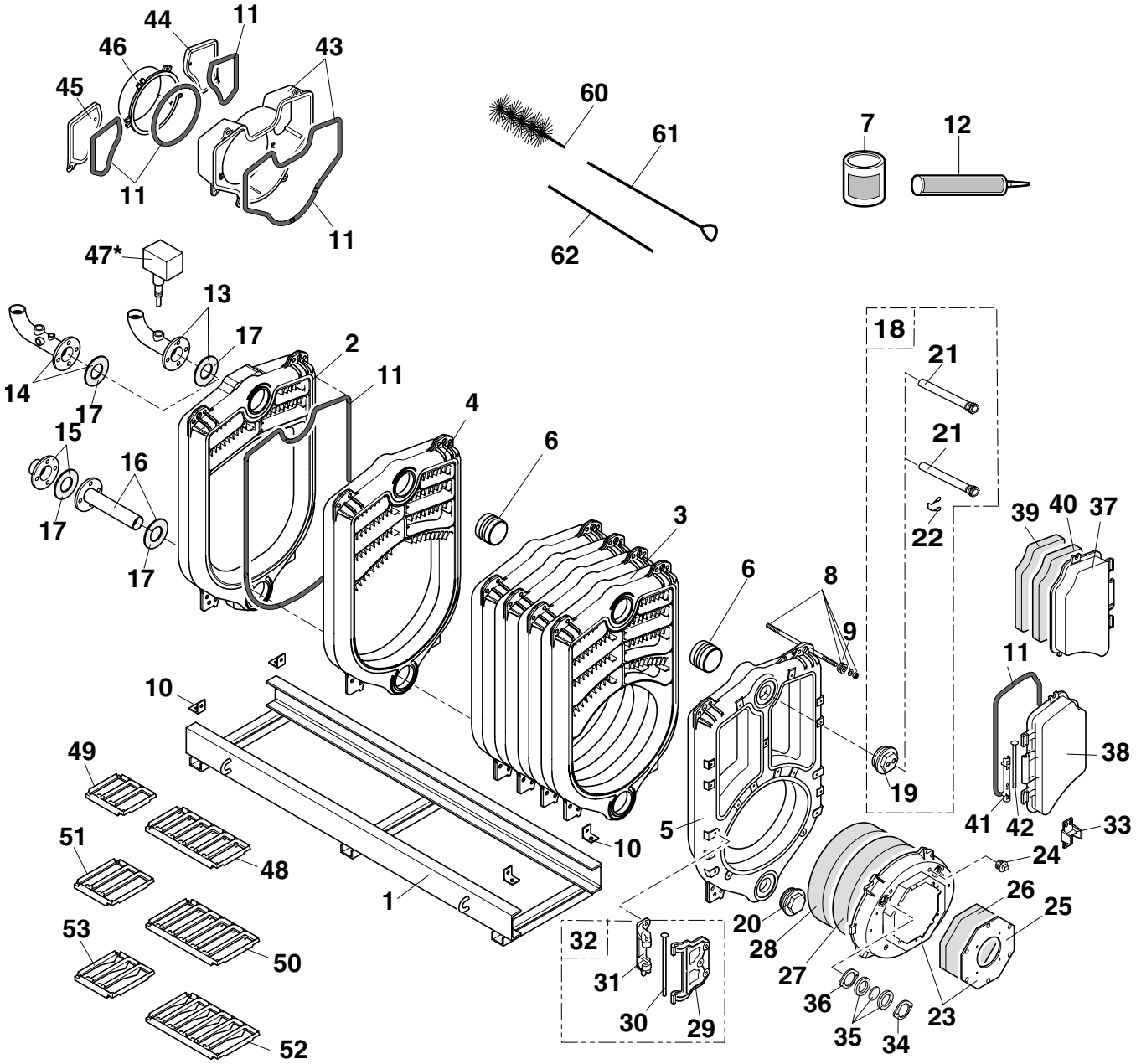

INSULATION

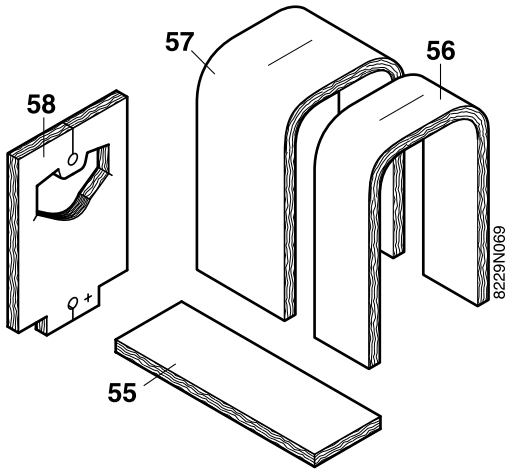

CASING

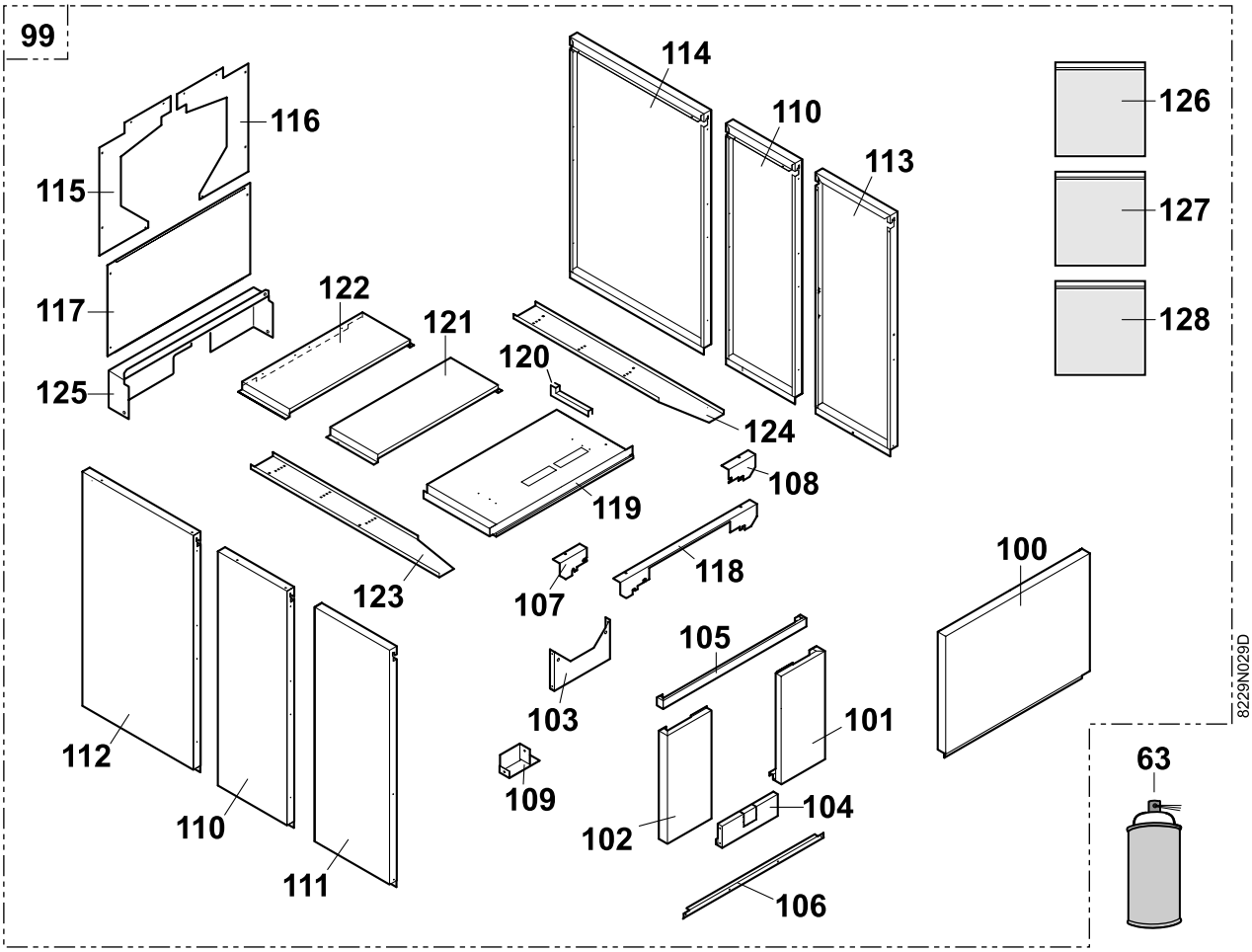

CONTROL PANEL

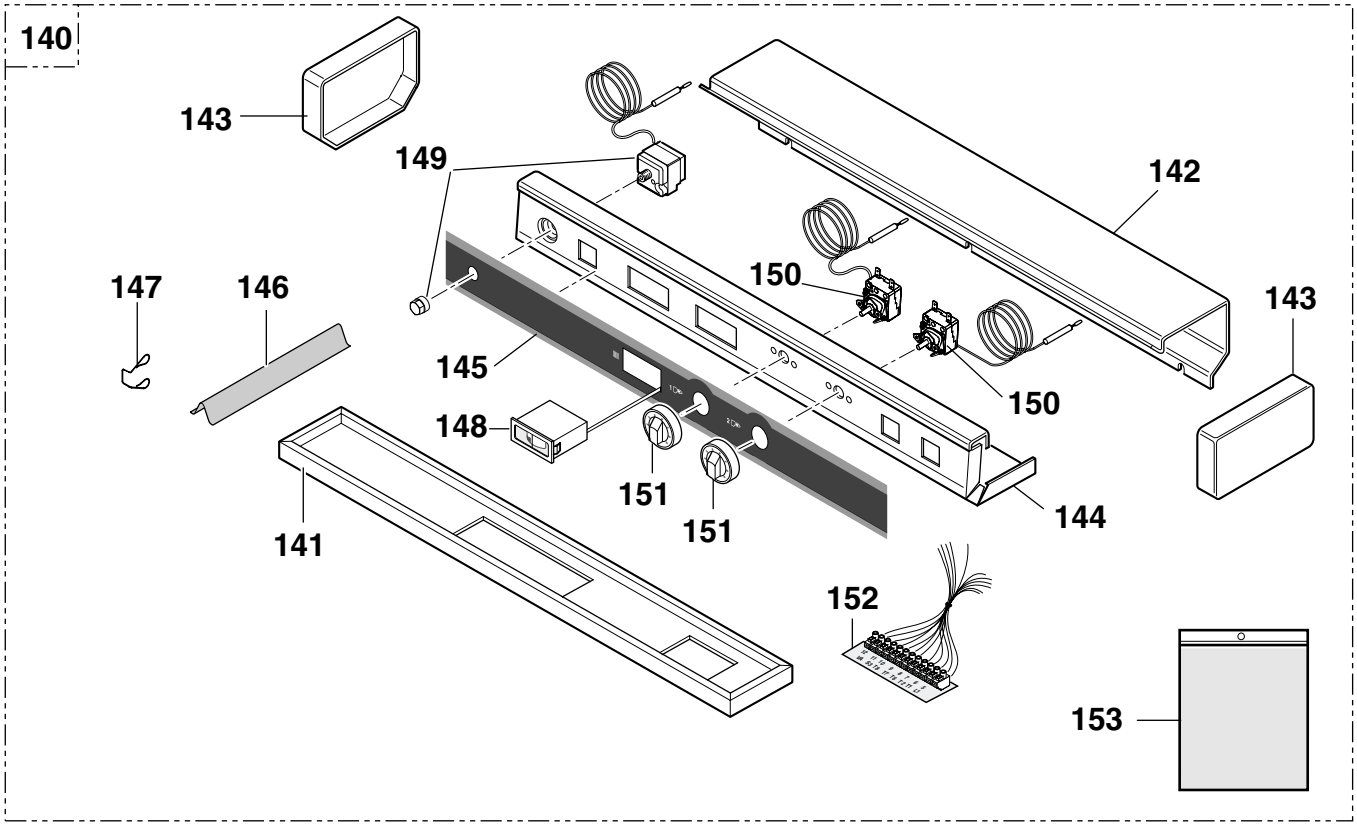

Ref.	Code no.	DESCRIPTION
		BOILER BODY
1	9757-0091	Complete underframe 8 sections
1	9757-0092	Complete underframe 9 and 10 sections
1	9757-0093	Complete underframe 11 and 12 sections
1	9757-0094	Complete underframe 13 and 14 sections
2	8229-8945	Complete rear section
3	8229-0041	Normal intermediate section
4	8229-0045	Special intermediate section
5	8229-0042	Complete front section
6	8005-0200	Nipple
7	9430-5027	Coating material for nipples
8	8229-8919	Complete assembly rod Ø 14 - Length 425
8	8229-8920	Complete assembly rod Ø 14 - Length 620
8	8229-8921	Complete assembly rod Ø 14 - Length 784
9	9754-0120	Spring
10	9752-5232	Attachment bracket
11	9508-6032	Thermocord
12	9428-5095	Silicone putty
13	8229-8948	Water flow flange + gasket 3" until the end of 97
14	8229-5502	Water flow flange + gasket 3" from 01/98 onwards
15	8229-8949	Water return flange (to be welded) + gasket 3"
16	8229-8950	Water balancing tube + gasket 11 to 14 sections
17	9501-4127	Gasket 135 x 80 x 4
18	8229-8946	Complete plug (2 holes)
19	8209-0049	$2^{1/2"}$ plug with 1/2" hole
20	8209-0048	Full plug $2^{1/2"}$
21	8500-0027	Well 1/2"
22	9758-1286	Spring for well
23	8229-8910	Complete burner door Ø $7^{1/2"}$
24	9495-0050	1/4" plug
25	8229-0531	Burner door plate with hole Ø $7^{1/2"}$
26	9755-0258	Burner door plate insulation
27	9755-0259	Protection to burner door
28	9755-0260	Burner door insulation
29	8229-0204	Added hinge
30	9756-0213	Burner door axle Ø 18
31	8229-0205	Burner door hinge
32	8229-8944	Set of hinges Ø 18 ref. 23 + 24 + 25
33	8229-0206	Ramp
34	9757-0027	Flange for flame supervision window
35	8015-7700	Glass for flame supervision window + gaskets
36	9501-0080	Seal for flame supervision window
37	8229-8905	Complete right hand cleaning door
38	8229-8906	Complete left hand cleaning door

Ref.	Code no.	DESCRIPTION
39	9755-0256	Cleaning door insulation
40	9755-0257	Cleaning door protection
41	8229-0202	Hinge for cleaning door
42	9756-0214	Pin for cleaning door
43	8229-8907	Complete smoke box
44	8229-8908	Complete right hand cleaning trap
45	8229-8909	Complete left hand cleaning trap
46	8229-8916	Flue nozzle Ø 250 - 8 to 10 sections
46	8229-8917	Flue nozzle Ø 300 - 11 to 14 sections
47	8802-4720	Flow switch GT 408 A
47	8802-4721	Flow switch GT 409 A
47	8802-4724	Flow switch GT 410 A
47	8802-4726	Flow switch GT 411 A
47	8802-4728	Flow switch GT 412 A
47	8802-4729	Flow switch GT 413 A / 414 A
48	8229-0010	Upper baffle width 190
49	8229-0022	Complementary upper baffle width. 190
50	8229-0011	Upper baffle width 240
51	8229-0023	Complementary upper baffle width. 240
52	8229-0012	Lower baffle
53	8229-0024	Complementary lower baffle
		BODY INSULATION
55	8229-4010	Lower body insulation 8 sections
55	8229-4016	Lower body insulation 9, 10 sections
55	8229-4034	Lower body insulation 11, 12 sections
55	8229-4036	Lower body insulation 13, 14 sections
56	8229-4004	Front body insulation width 520
57	8229-4015	Body insulation width 520
57	8229-4018	Body insulation width 600
57	8229-4009	Body insulation width 820
57	8229-4012	Body insulation width 920
58	8229-4005	Rear insulation
		MISCELLANEOUS
60	9750-5025	Brush
61	9750-5060	Brush rod length 1300
62	9750-5048	Extension piece for brush rod length 650
63	9434-5102	Retouching spray paint - anthracite gray
63	9434-5104	Retouching spray paint - ivory
		CASING
99	8229-8841	Complete casing 8 sections
99	8229-8842	Complete casing 9 sections
99	8229-8843	Complete casing 10 sections

Ref.	Code no.	DESCRIPTION
99	8229-8844	Complete casing 11 sections
99	8229-8845	Complete casing 12 sections
99	8229-8846	Complete casing 13 sections
99	8229-8847	Complete casing 14 sections
100	8229-1006	Complete upper front panel
101	8229-1001	Complete right hand lower front panel
102	8229-1003	Complete left hand lower front panel
103	8229-1004	Complete upper front burner panel
104	8229-1005	Complete lower front burner panel
105	8229-8834	Complete front casing bracket
106	8229-0537	Lower front cross bar
107	8229-8807	Upper left hand casing bracket
108	8229-8808	Upper right hand casing bracket
109	8229-8010	Lower casing bracket
110	8229-0508	Left or right hand side panel width 480
111	8229-8810	Complete front left hand side panel
112	8229-8812	Complete front left hand side panel width 770
112	8229-8816	Complete front left hand side panel width 610
112	8229-8814	Complete front left hand side panel width 930
113	8229-8811	Complete front right hand side panel
114	8229-8813	Complete front right hand side panel width 770
114	8229-8817	Complete front right hand side panel width 610
114	8229-8815	Complete front right hand side panel width 930
115	8229-8835	Complete left hand upper rear panel
116	8229-8836	Complete right hand upper rear panel
117	8229-8012	Lower rear panel
118	8229-8837	Complete upper cross bar
119	8229-8809	Complete front top
120	9755-0187	Rubber profile for wiring duct
121	8229-0515	Complete intermediate top
122	8229-0518	Complete rear top width 170
122	8229-0511	Complete rear top width 330
122	8229-0514	Complete rear top width 490
123	8229-8819	Complete left hand wiring duct 8 sections
123	8229-8820	Complete left hand wiring duct 9 sections
123	8229-8821	Complete left hand wiring duct 10 sections
123	8229-8822	Complete left hand wiring duct 11 sections
123	8229-8823	Complete left hand wiring duct 12 sections
123	8229-8824	Complete left hand wiring duct 13 sections
123	8229-8825	Complete left hand wiring duct 14 sections
124	8229-8827	Complete right hand wiring duct 8 sections
124	8229-8828	Complete right hand wiring duct 9sections
124	8229-8829	Complete right hand wiring duct 10 sections
124	8229-8830	Complete right hand wiring duct 11 sections
124	8229-8831	Complete right hand wiring duct 12 sections

Ref.	Code no.	DESCRIPTION
124	8229-8832	Complete right hand wiring duct 13 sections
124	8229-8833	Complete right hand wiring duct 14 sections
125	8229-5501	Complementary lower rear panel
126	8229-8933	Bag of screws common pieces (CS10)
127	8229-8934	Bag of screws variable pieces (CS11/12)
128	8229-8935	Bag of screws variable pieces (CS13/14)
		CONTROL PANEL (FA 122)
140	8555-7377	Complete control panel
141	8219-0508	Base for control panel
142	8219-0502	Top cover for control panel
143	9755-0143	Side cover
144	8555-8905	Front cover
145	9421-0718	Control strip
146	9536-5613	Separator for well
147	9758-1286	Spring for well
148	9536-5155	Thermometer
149	9536-5605	Safety thermometer
150	9536-5604	Thermostat
151	8219-5508	Setting button with pins
152	8555-4910	Electrical circuit
153	8555-5500	Fasteners for control panel

The Manufacturer:

De Dietrich BOILERS

Bp 30 – 57, RUE DE LA Gare
F – 67580 MERTZWILLER
Tel: +33/3/88/80/27/00 – Fax: +33/3 88 80 27 99
Ni IRC : 347 555 559 RCS STRASBOURG
www.dedietrich-thermique.com

DDR AMERICAS INC.

In Canada:
1090 Fountain St., Unit #10
Cambridge, Ontario, N3E 1A3 - CANADA
Tel: 519.650.0420 Fax: 519.650.1709

In USA or South America:
1054 North DuPage Avenue
Lombard, Illinois, USA 60148
Tel: 630.953.2374 Fax: 630.953.2376

Toll Free 1.800.943.6275
www.dedietrichboilers.com

In the interest of customers, DE DIETRICH & DDR Americas are continuously endeavouring to make improvements in product quality.
All the specifications stated in this document are therefore subject to change without notice