751287 OV MANUAL 19/10/10 08:46 Page 1

GLEN DIMPLEX
BOILERS

Glen Dimplex Boilers
Stoney Lane
Prescot
Merseyside. L35 2XW

For all telephone enquiries call:
0844 371 2222

website:
www.glendimplexboilers.com

Part of the Glen Dimplex Group

Glen Dimplex Boilers is continually improving its products and therefore reserve the right to change product specifications without prior notice. Errors & omissions excepted.

SALES AND SERVICE: 0844 371 1111

Part No: 751287 - Issue 4 - 07/07/10

© Dimplex Boilers 2008

GLEN DIMPLEX
BOILERS

Dimplex 18 OV
Dimplex 32 OV

Open Vented Condensing Boilers

Installation and Servicing Instructions

These instructions should be left with the user

© Dimplex Boilers 2008

spares & parts online IBASIS.co.uk

GAS COUNCIL NUMBERS

Natural Gas

Dimplex 18 OV - Gas Council Appliance No: **41 149 04**

Dimplex 32 OV - Gas Council Appliance No: **41 149 03**

benchmark COLLECTIVE MARK
THE MARK OF QUALITY FOR THE INSTALLATION, COMMISSIONING AND SERVICING OF DOMESTIC HEATING AND HOT WATER SYSTEMS

WRAS APPROVED PRODUCT

kiwa approved product
UK WATER SUPPLY REGULATIONS

CE

© Dimplex Boilers 2008

© Dimplex Boilers 2008

IBASIS.co.uk

751287 OV MANUAL 19/10/10 08:46 Page 3

spares & parts online IBASIS.COUK

VENTED CYLINDER COMMISSIONING CHECKLIST

This Commissioning Checklist is to be completed in full by the competent person who commissioned the cylinder as a means of demonstrating compliance with the appropriate Building Regulations and should remain attached to the cylinder for future reference.

Failure to install and commission this equipment to the manufacturer's instructions may invalidate the warranty but does not affect statutory rights.

Commissioned by (print name) _____

Company Name _____

Company Address _____

Telephone Number _____ Commissioning Date _____

To be completed by the customer on receipt of a Building Regulations Compliance Certificate*:

Building Regulations Notification Number *(if applicable)* _____

ALL CYLINDERS

The vent pipe has been installed to BS6700/BS5449		Yes ☐
What is the static head?	☐ *metres*	
Has an immersion heater been fitted?	Yes ☐	No ☐
If yes, does it have a non-auto resetting energy cut out?	Yes ☐	No ☐
Is the cold feed cistern supported in accordance with BS4213?		Yes ☐
Is the cylinder solar (or other renewable) compatible?	Yes ☐	No ☐
All appropriate pipes including the vent pipe have been insulated up to 1metre or the point where they become concealed		Yes ☐

INDIRECT ONLY

A cylinder thermostat has been fitted in the recommended position			Yes ☐
The hot water is controlled by a programmer or time switch			Yes ☐
Is the system fully pumped?		Yes ☐	No ☐
Type of control system	Y Plan ☐	S Plan ☐	Other ☐

Commissioning Engineer's Signature _____

Customer's Signature _____

(To confirm satisfactory demonstration and receipt of manufacturer's literature)

*Where an installation is notifiable in England & Wales this will be made to Local Authority Building Control (LABC) either directly or through a Competent Persons Scheme. A Building Regulations Compliance Certificate will then be issued to the customer.

benchmark

©Heating and Hotwater Industry Council (HHIC) www.centralheating.co.uk

19.0 WARRANTY TERMS & CONDITIONS

19.1 DIMPLEX 5YR WARRANTY

1. Registration must be completed within 30 days of installation. Failure to return within 30 days will invalidate your warranty. Registration if effected by returning the enclosed registration card to the commercial center of Dimplex at 5 Spartan Close, Tachbrook Park, Leamington Spa, CV34 6RR. Proof of postage should be obtained.
2. The Benchmark document must be completed by installer/householder at the time of installation and must be presented to our engineer at subsequent visits.
3. The boiler must be serviced annually, at the householders expenses in accordance with manufacturer's instructions, and this service must be booked through Dimplex by calling 0844 371 1121
4. The service must be carried out by a Dimplex approved central heating engineer. Any work carried out by a non-Dimplex approved engineer will invalidate this warranty.
5. Appropriate system cleaning (e.g. power flush) and the correct use of additives must be carried out at the time of installation. Failure to cleanse the system will invalidate this warranty. Evidence of cleansing should be presented to our engineer upon request.
6. This warranty applies only to manufacturing problems with the boiler; damage caused through misuse, incorrect operation, foreign bodies in the heating system, system faults and failures are not covered.
7. This warranty applies only if the boiler is installed and used in accordance with the manufacturer's instructions, in normal domestic applications.
8. Providing all the above Terms and Conditions are met, this warranty covers functional parts and labour.
9. Dimplex offer the opportunity for a system audit and commissioning check within 30 days of registration. This is chargeable at the same rate as an annual service and if taken up then the first annual service will be provided free of charge. Failure to take up this offer may invalidate the full warranty which will revert to a standard 2 year warranty which will require an annual service In year 2 in any event.
10. Failure to meet any of the above Terms and Conditions will invalidate this warranty.

© Dimplex Boilers 2008

SECTION	DESCRIPTION	PAGE
1.0	Introduction	4
2.0	Boiler Layout	7
3.0	Boiler Operation	8
4.0	Technical Data	9
5.0	Dimensions	10
6.0	System Details	11
7.0	Site Requirements	12
8.0	Flue options	16
9.0	Installation	20
10.0	Commissioning	24
11.0	Service Mode	25
12.0	Completion	25
13.0	Servicing and Maintenance	26
14.0	Changing Components	29
15.0	Electrical	35
16.0	Spare Parts	36
17.0	Error Codes	37
18.0	Benchmark	38
19.0	Warranty Terms & Conditions	42

© Dimplex Boilers 2008

751287 OV MANUAL 19/10/10 08:46 Page 4

1.1 BUILDING REGULATIONS AND BENCHMARK CHECKLIST

Building Regulations (England & Wales) require notification of the installation of a heating appliance to the relevant Local Authority Building Control Department.

This can be achieved via a Competent Persons Self Certification Scheme as an option to notifying the Local Authority directly.

CORGI operates a Self Certification Scheme for gas heating appliances.

With the introduction of Self Certification Schemes, the Benchmark Logbook is being withdrawn. However, a similar document in the form of a commissioning checklist and service interval record is incorporated at the back of these instructions.

This company is a member of the Benchmark scheme and fully supports the aims of the programme. Its aim is to improve the standards of installation and commissioning of central heating systems in the UK and to encourage the regular servicing of all central heating systems to ensure safety and efficiency.

Building Regulations require that installations should comply with manufacturer's instructions. It is therefore important that the commissioning checklist is completed by the installer. The relevant section of Building Regulations only relates to dwellings. Therefore the checklist only applies if the appliance is being installed in a dwelling or some related structure.

1.2 INSTALLATION, COMMISSIONING, SERVICE & REPAIR

This appliance must be installed in accordance with the manufacturer's instructions and the regulations in force. Read the instructions fully before installing or using the appliance.

In GB, this must be carried out by a competent person as stated in the Gas Safety (Installation & Use) Regulations.

Definition of competence: A person who works for a CORGI registered company and holding current certificates in the relevant ACS modules, is deemed competent.

In IE, this must be carried out by a competent person as stated in I.S. 813 "Domestic Gas Installations"

No modifications or changes can be made to this appliance without prior written permission from Dimplex.

The manufacturers instructions must not be taken as overriding any statutory requirements. If in doubt contact Dimplex on 01926 834834.

Warning – Check the information on the data plate is compatible with local supply conditions.

All CORGI registered installers carry a CORGI identification card and have a registration number. You can check your installer is registered by telephoning 0870 4012300 or writing to:-

1 Elmwood
Chineham Business Park
Crockford Lane
Basingstoke
RG24 8WG

or check online at www.corgi-gas-safety.com

These appliances meets the requirements of;

Gas Appliance Directive	90/396/EEC
Efficiency of Hot Water Boilers Directive	92/42/EEC
Low Voltage Directive	92/42/EEC
Electromagnetic Compatibility Directive	92/31/EEC

Type test certified by:- Notified Body 0087 (Pin 87BT49).

Product/Production certified by:
Notified Body 0086.

For GB/IE only

© Dimplex Boilers 2008

SERVICE RECORD

It is recommended that your hot water system is serviced regularly and that the appropriate Service Record is completed.

Service Provider
Before completing the appropriate Service Record below, please ensure you have carried out the service as described in the manufacturer's instructions.

SERVICE 1 Date
Engineer Name
Company Name
Telephone Number
Comments
Signature

SERVICE 2 Date
Engineer Name
Company Name
Telephone Number
Comments
Signature

SERVICE 3 Date
Engineer Name
Company Name
Telephone Number
Comments
Signature

SERVICE 4 Date
Engineer Name
Company Name
Telephone Number
Comments
Signature

SERVICE 5 Date
Engineer Name
Company Name
Telephone Number
Comments
Signature

SERVICE 6 Date
Engineer Name
Company Name
Telephone Number
Comments
Signature

SERVICE 7 Date
Engineer Name
Company Name
Telephone Number
Comments
Signature

SERVICE 8 Date
Engineer Name
Company Name
Telephone Number
Comments
Signature

SERVICE 9 Date
Engineer Name
Company Name
Telephone Number
Comments
Signature

SERVICE 10 Date
Engineer Name
Company Name
Telephone Number
Comments
Signature

© Dimplex Boilers 2008

751287 OV MANUAL 19/10/10 08:46 Page 5

MAINS PRESSURE HOT WATER STORAGE SYSTEM COMMISSIONING CHECKLIST

This Commissioning Checklist is to be completed in full by the competent person who commissioned the storage system as a means of demonstrating compliance with the appropriate Building Regulations and then handed to the customer to keep for future reference.

Failure to install and commission this equipment to the manufacturer's instructions may invalidate the warranty but does not affect statutory rights.

Customer Name _____ Telephone Number _____

Address _____

Cylinder Make and Model _____

Cylinder Serial Number _____

Commissioned by *(print name)* _____ Registered Operative ID Number _____

Company Name _____ Telephone Number _____

Company Address _____

_____ Commissioning Date _____

To be completed by the customer on receipt of a Building Regulations Compliance Certificate*:

Building Regulations Notification Number *(if applicable)* _____

ALL SYSTEMS PRIMARY SETTINGS (indirect heating only)

Is the primary circuit a sealed or open vented system?	Sealed ☐	Open ☐	
What is the maximum primary flow temperature?			°C

ALL SYSTEMS

What is the incoming static cold water pressure at the inlet to the system?			bar
Has a strainer been cleaned of installation debris (if fitted)?	Yes ☐	No ☐	
Is the installation in a hard water area (above 200ppm)?	Yes ☐	No ☐	
If yes, has a water scale reducer been fitted?	Yes ☐	No ☐	
What type of scale reducer has been fitted?			
What is the hot water thermostat set temperature?			°C
What is the maximum hot water flow rate at set thermostat temperature (measured at high flow outlet)?			l/min
Time and temperature controls have been fitted in compliance with Part L of the Building Regulations?		Yes ☐	
Type of control system (if applicable)	Y Plan ☐ S Plan ☐	Other ☐	
Is the cylinder solar (or other renewable) compatible?	Yes ☐	No ☐	
What is the hot water temperature at the nearest outlet?			°C
All appropriate pipes have been insulated up to 1 metre or the point where they become concealed		Yes ☐	

UNVENTED SYSTEMS ONLY

Where is the pressure reducing valve situated (if fitted)?			
What is the pressure reducing valve setting?			bar
Has a combined temperature and pressure relief valve and expansion valve been fitted and discharge tested?	Yes ☐	No ☐	
The tundish and discharge pipework have been connected and terminated to Part G of the Building Regulations		Yes ☐	
Are all energy sources fitted with a cut out device?	Yes ☐	No ☐	
Has the expansion vessel or internal air space been checked?	Yes ☐	No ☐	

THERMAL STORES ONLY

What store temperature is achievable?		°C
What is the maximum hot water temperature?		°C

ALL INSTALLATIONS

The hot water system complies with the appropriate Building Regulations	Yes ☐
The system has been installed and commissioned in accordance with the manufacturer's instructions	Yes ☐
The system controls have been demonstrated to and understood by the customer	Yes ☐
The manufacturer's literature, including Benchmark Checklist and Service Record, has been explained and left with the customer	Yes ☐

Commissioning Engineer's Signature _____

Customer's Signature _____

(To confirm satisfactory demonstration and receipt of manufacturer's literature)

*All installations in England and Wales must be notified to Local Authority Building Control (LABC) either directly or through a Competent Persons Scheme. A Building Regulations Compliance Certificate will then be issued to the customer.

benchmark COLLECTIVE MARK
THE MARK OF QUALITY FOR THE INSTALLATION, COMMISSIONING AND SERVICING OF DOMESTIC HEATING AND HOT WATER SYSTEMS

©Heating and Hotwater Industry Council (HHIC)

www.centralheating.co.uk

© Dimplex Boilers 2008

1.3 LEGISLATION

The appliance is suitable only for installation in GB and IE and should be installed in accordance with the rules in force, and only used in a suitably ventilated location.

In GB, the installation must be carried out by a CORGI Registered Installer. It must be carried out in accordance with the relevant requirements of the:

- Gas Safety (Installation & Use) Regulations.
- The appropriate Building Regulations either The Building regulations, The Building Regulations (Scotland), Building Regulations (Northern Ireland).
- The Water Fittings Regulations or Water Byelaws in Scotland.
- The Current I.E.E. Wiring Regulations.

Where no specific instructions are given, reference should be made to the relevant British Standard Code of Practice.

In IE, the installation must be carried out by a competent Person and installed in accordance with the current edition of I.S. 813 'Domestic Gas Installations', the current Building Regulations and reference should be made to the current ETCI rules for electrical installation.

All systems must be thoroughly flushed and treated with inhibitor (see section 6.2).

Codes of Practice - refer to the most recent version

In GB the following Codes of Practice apply:

Standard	Scope
BS 7967	Carbon monoxide in dwellings and the combustion performance of gas fired appliances
BS 7967-2	Guide for using electronic portable combustion gas analysers in the measurement of carbon monoxide and the determination of combustion performance
BS 7967-3	Guide for responding to measurements obtained from electronic portable combustion gas analysers
BS 7967-4	Guide for using electronic portable combustion gas analysers as part of the process of servicing and maintenance of gas fired appliances
BS 6891	Gas installation
BS 5546	Installation of hot water supplies for domestic purposes
BS 5449	Forced circulation hot water systems
BS 6798	Installation of gas fired hot water boilers
BS 5440 Part 1	Flues
BS 5440 Part 2	Ventilation
BS 7074	Expansion vessels and ancillary equipment for sealed water systems

In IE the following Codes of Practice apply:

Standard	Scope
I.S. 813	Domestic Gas Installation

The following standards give valuable additional information;

BS 5546	Installation of hot water supplies for domestic purposes
BS 5449	Forced circulation hot water systems
BS 7074	Expansion vessels and ancillary equipment for sealed water systems
BS 7593	Treatment of water in domestic hot water central heating systems

GAS LEAKS
DO NOT OPERATE ANY ELECTRICAL SWITCHES, OR USE A NAKED FLAME. TURN OFF THE GAS SUPPLY. VENTILATE THE AREA BY OPENING DOORS AND WINDOWS. CALL OUT YOUR LOCAL GAS SUPPLIER
TEL: 0800 111 999

Control of Substances Hazardous to Health
Under Section 6 of the Health and Safety at Work Act 1974, it is required to provide information on substances hazardous to health.

The adhesives and sealants used in this appliance are cured and give no known hazard in this state.

Insulation Pads - These can cause irritation to skin, eye and respiratory tract. If you have a history of skin complaint you may be susceptible to irritation. High dust levels are usual only if the material is broken. Normal handling should not cause discomfort, but follow normal good hygiene and wash your hands before eating, drinking or going to the lavatory. If you do suffer irritation to the eyes or severe irritation to the skin seek medical attention.

Gas and Electricity Consumer Council (Energywatch)
Energywatch is an independent organisation, which protects the interests of gas users. If you need advice concerning energy issues, they may be contacted on their consumer help line number: 08459 060708, or via their website; www.energywatch.org.uk.

This appliance is not intended for use by persons (including children) with reduced physical, sensory or mental capabilities, or lack experience and knowledge, unless they have been given supervision or instructions concerning use of the appliance by a person responsible for their safety. Children should be supervised to ensure that they do not play with the appliance.

© Dimplex Boilers 2008

751287 OV MANUAL 19/10/10 08:46 Page 6

1.4 SAFE MANUAL HANDLING

1. The boiler should be handled and lifted by two people. Wear appropriate Personal Protection Equipment e.g. protective gloves, safety footwear etc.
Plan your route to minimise the number of turns needed to handle/lift the boiler.

2. Where possible transport the boiler using a sack truck or other suitable trolley. Try to avoid steps, wet or slippery surfaces, unlit areas etc. and take special care on ladders/into lofts.

3. When handling or lifting always use safe techniques - keep your back straight, bend your knees. Don't twist - move your feet, avoid bending forwards and sideways and keep the load as close to your body as possible (Fig. 1).

4. Asses the risks associated with handling and lifting according to the conditions on site. If in doubt seek advice before proceeding. Health and Safety is the responsibility of everyone.

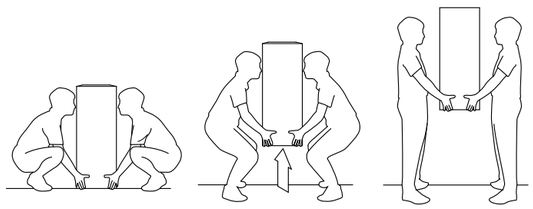

Fig. 1

1.5 DESCRIPTION

The appliance incorporates a microprocessor based, fully modulating air/gas ratio control system with direct burner ignition, which provides a modulated heat output to central heating (CH) demand, and with internal frost protection provided as standard.

The heat exchanger coils are constructed from stainless steel, with flow and return connections accessible from the top.

The boiler has a pump over run feature therefore the central heating system must include either a propriety automatic bypass valve or a radiator must be fitted with lock shield valves.

This boiler is designed for use on a governed supply at 20mb with natural gas. A natural gas to propane conversion kit is available. Required electrical supply is 230v A.C.

Note:
When installing, commissioning or servicing a gas appliance that incorporates a pre-mix burner and zero-set governor, because it is not possible to measure an operating pressure the engineer should first check that the gas supply is metered and ascertain whether it is possible to measure the gas rate. If the gas input rate can be measured then the requirements of GSIUR 26(9) can be met, including any specific requirements in manufacturer's instructions.

If gas input rate cannot be measured then, to satisfy the intent of GSIUR 26(9), the engineer shall measure the combustion quality of the appliance in accordance with BS 7967 parts 1-4 or the manufacturer's instructions.

If the engineer does not have the required equipment and no alternative test is specified by the manufacturer then the appliance shall be turned off and disconnected as an uncommissioned appliance until such time that equipment is available to undertake such tests.

© Dimplex Boilers 2008

SERVICE RECORD

It is recommended that your heating system is serviced regularly and that the appropriate Service Record is completed.

Service Provider
Before completing the appropriate Service Record below, please ensure you have carried out the service as described in the manufacturer's instructions.

Always use the manufacturer's specified spare part when replacing controls.

SERVICE 1 Date
Energy Efficiency Checklist completed? Yes ☐ No ☐
Engineer Name
Company Name
Telephone Number
CORGI ID Number
Comments
Signature

SERVICE 2 Date
Energy Efficiency Checklist completed? Yes ☐ No ☐
Engineer Name
Company Name
Telephone Number
CORGI ID Number
Comments
Signature

SERVICE 3 Date
Energy Efficiency Checklist completed? Yes ☐ No ☐
Engineer Name
Company Name
Telephone Number
CORGI ID Number
Comments
Signature

SERVICE 4 Date
Energy Efficiency Checklist completed? Yes ☐ No ☐
Engineer Name
Company Name
Telephone Number
CORGI ID Number
Comments
Signature

SERVICE 5 Date
Energy Efficiency Checklist completed? Yes ☐ No ☐
Engineer Name
Company Name
Telephone Number
CORGI ID Number
Comments
Signature

SERVICE 6 Date
Energy Efficiency Checklist completed? Yes ☐ No ☐
Engineer Name
Company Name
Telephone Number
CORGI ID Number
Comments
Signature

SERVICE 7 Date
Energy Efficiency Checklist completed? Yes ☐ No ☐
Engineer Name
Company Name
Telephone Number
CORGI ID Number
Comments
Signature

SERVICE 8 Date
Energy Efficiency Checklist completed? Yes ☐ No ☐
Engineer Name
Company Name
Telephone Number
CORGI ID Number
Comments
Signature

SERVICE 9 Date
Energy Efficiency Checklist completed? Yes ☐ No ☐
Engineer Name
Company Name
Telephone Number
CORGI ID Number
Comments
Signature

SERVICE 10 Date
Energy Efficiency Checklist completed? Yes ☐ No ☐
Engineer Name
Company Name
Telephone Number
CORGI ID Number
Comments
Signature

© Dimplex Boilers 2008

751287 OV MANUAL 19/10/10 08:46 Page 7

GAS BOILER SYSTEM COMMISSIONING CHECKLIST

This Commissioning Checklist is to be completed in full by the competent person who commissioned the boiler as a means of demonstrating compliance with the appropriate Building Regulations and then handed to the customer to keep for future reference.

Failure to install and commission this equipment to the manufacturer's instructions may invalidate the warranty but does not affect statutory rights.

Customer Name _____ Telephone Number _____

Address _____

Boiler Make and Model _____

Boiler Serial Number _____

Commissioned by *(print name)* _____ CORGI ID Number _____

Company Name _____ Telephone Number _____

Company Address _____

_____ Commissioning Date _____

To be completed by the customer on receipt of a Building Regulations Compliance Certificate*:

Building Regulations Notification Number *(if applicable)*

CONTROLS Tick the appropriate boxes

Time and Temperature Control to Heating	Room Thermostat and Programmer/Timer ☐	Programmable Room Thermostat ☐	Load/Weather Compensation ☐	Optimum Start Control ☐
Time and Temperature Control to Hot Water			Cylinder Thermostat and Programmer/Timer ☐	Combination Boiler ☐
Heating Zone Valves			Fitted ☐	Not Required ☐
Hot Water Zone Valves			Fitted ☐	Not Required ☐
Thermostatic Radiator Valves			Fitted ☐	Not Required ☐
Automatic Bypass to System			Fitted ☐	Not Required ☐
Boiler Interlock				Provided ☐

ALL SYSTEMS

The system has been flushed and cleaned in accordance with BS7593 and boiler manufacturer's instructions Yes ☐

What system cleaner was used?

What inhibitor was used? Quantity _____ *litres*

CENTRAL HEATING MODE Measure and Record:

Gas Rate	_____ m^3/hr	OR		_____ ft^3/hr
Burner Operating Pressure (if applicable)	_____ mbar	OR	Gas Inlet Pressure	_____ mbar
Central Heating Flow Temperature				_____ °C
Central Heating Return Temperature				_____ °C

COMBINATION BOILERS ONLY

Is the installation in a hard water area (above 200ppm)? Yes ☐ No ☐

If yes, has a water scale reducer been fitted? Yes ☐ No ☐

What type of scale reducer has been fitted?

DOMESTIC HOT WATER MODE Measure and Record:

Gas Rate	_____ m^3/hr	OR		_____ ft^3/hr
Burner Operating Pressure (at maximum rate)	_____ mbar	OR	Gas Inlet Pressure (at maximum rate)	_____ mbar
Cold Water Inlet Temperature				_____ °C
Hot water has been checked at all outlets			Yes ☐ Temperature	_____ °C
Water Flow Rate				_____ *l/min*

CONDENSING BOILERS ONLY

The condensate drain has been installed in accordance with the manufacturer's instructions and/or BS5546/BS6798 Yes ☐

ALL INSTALLATIONS

If required by the manufacturer, record the following CO_2 _____ % OR CO _____ *ppm* OR CO/CO_2 Ratio _____

The heating and hot water system complies with the appropriate Building Regulations Yes ☐

The boiler and associated products have been installed and commissioned in accordance with the manufacturer's instructions Yes ☐

The operation of the boiler and system controls have been demonstrated to and understood by the customer Yes ☐

The manufacturer's literature, including Benchmark Checklist and Service Record, has been explained and left with the customer Yes ☐

Commissioning Engineer's Signature

Customer's Signature

(To confirm satisfactory demonstration and receipt of manufacturer's literature)

*All installations in England and Wales must be notified to Local Authority Building Control (LABC) either directly or through a Competent Persons Scheme. A Building Regulations Compliance Certificate will then be issued to the customer.

benchmark COLLECTIVE MARK
THE MARK OF QUALITY FOR THE INSTALLATION, COMMISSIONING AND SERVICING OF DOMESTIC HEATING AND HOT WATER SYSTEMS

©Heating and Hotwater Industry Council (HHIC)

www.centralheating.co.uk

© Dimplex Boilers 2008

2.1 KEY

1. Flue Gas Sensor
2. Thermal Fuse
3. Primary Heat Exchanger
4. Spark Electrode
5. Igniter
6. Gas Isolation Cock
7. Throttle Adjustment Screw
8. Gas Valve and Swirl Plate Assembly
9. Gas Valve Lead and Plug
10. PCB Control Box
11. Gas Isolating Cock
12. User Control
13. Gas Inlet Pressure Test Point
14. Control Display
15. Fan Assembly
16. Condensate Trap & Drain Pipe assembly
17. Flame Sensing Electrode
18. Combustion Box Cover and Burner
19. Air / Gas Collector Arm
20. CH Return Thermistor
21. CH Flow Thermistor

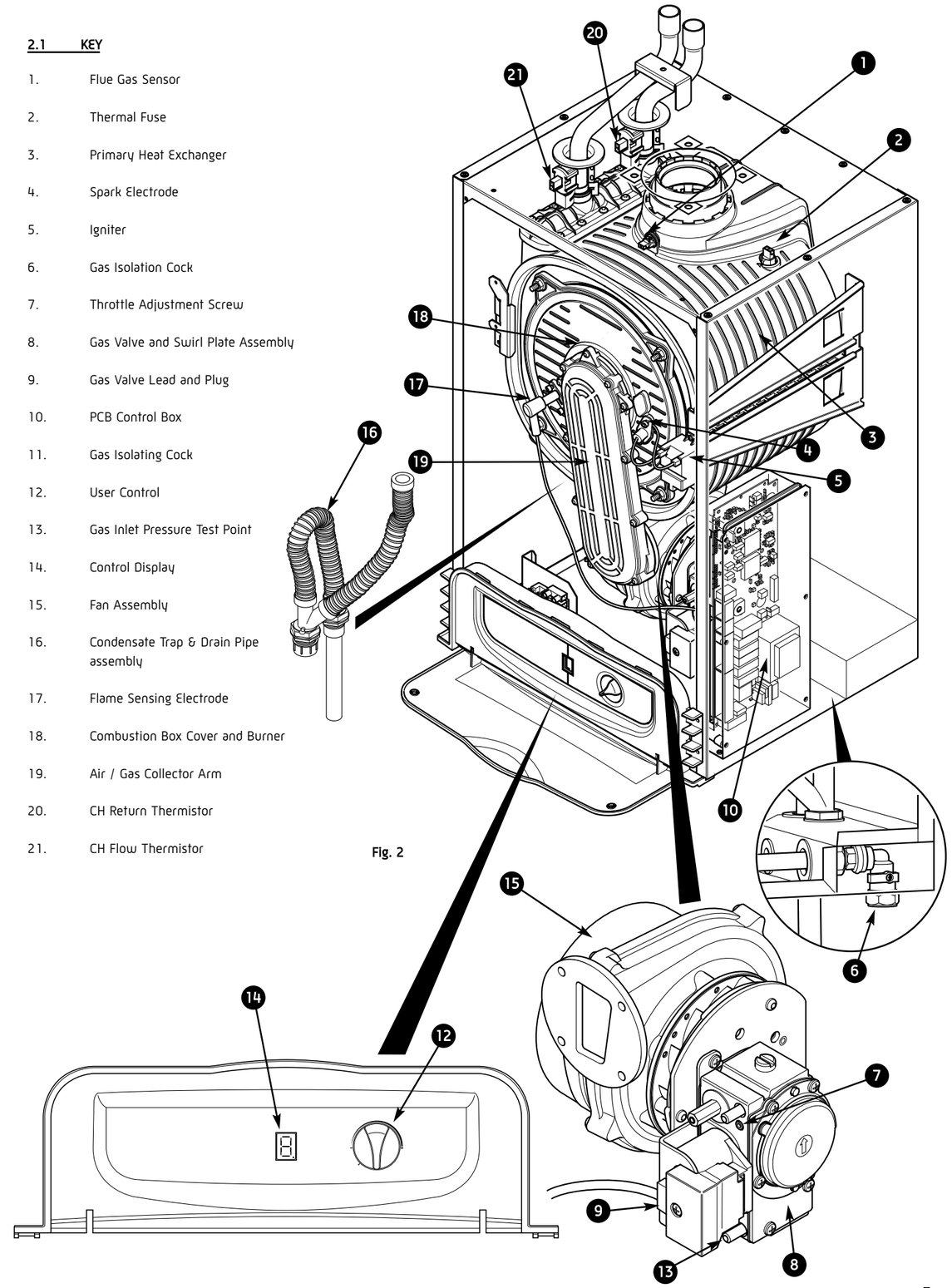

Fig. 2

spares & parts online spares & parts online spares & parts online

3.0 BOILER OPERATION

dimplex

3.1 HEATING MODE

1. With a demand for heating, the pump, circulates water through the primary circuit.

2. Once the main burner ignites the fan speed controls the gas rate to maintain the heating temperature measured by the temperature sensors.

3. When the flow temperature exceeds the setting temperature, a 5 minute delay occurs before the burner relights automatically (anti-cycling).

3.2 FROST PROTECTION MODE

1. Providing there is a mains power supply to the appliance, the frost protection mode is integral.
If the system temperature falls below 5°C then the boiler will fire on its minimum setting until a flow temperature of 20°C is reached.
Further protection can be incorporated by using a system frost thermostat.

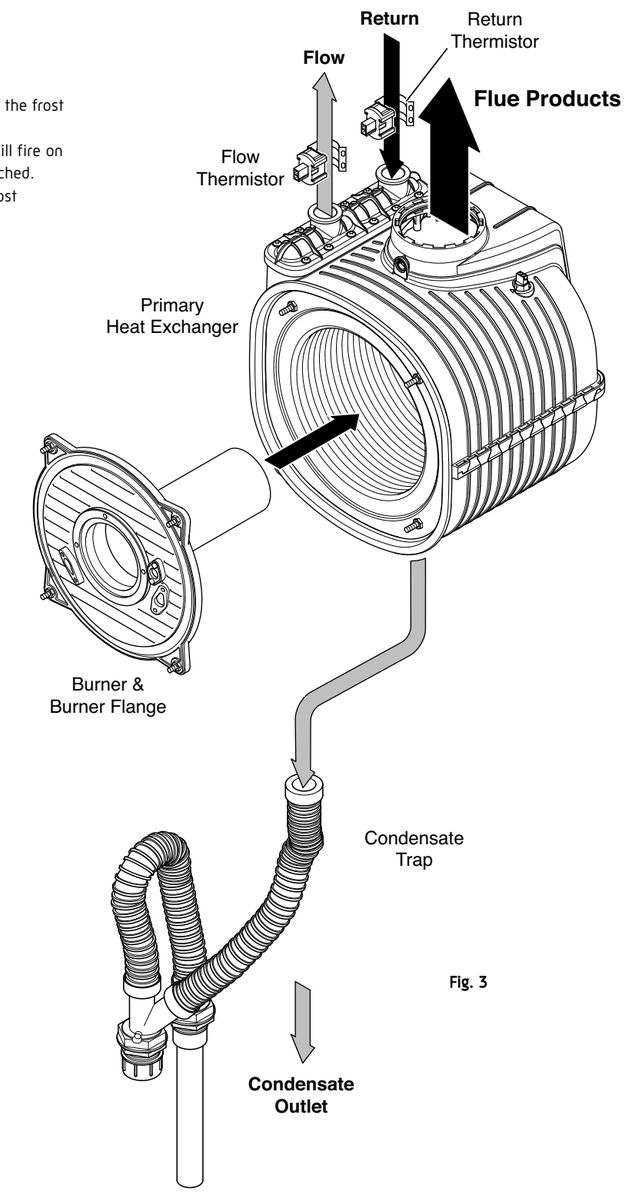

Fig. 3

© Dimplex Boilers 2008

17.0 ERROR CODES

dimplex

AFTER ENSURING THAT ALL ACTIONS HAVE BEEN CARRIED OUT RESET THE BOILER (REFER TO SECTION 5.4) IF ANY OF THE BELOW FAULTS OCCUR DURING INSTALLATION PLEASE REFER TO THE ACTIONS, HOWEVER IF ANY OTHER ERROR CODE IS SHOWING PLEASE CONTACT THE INSTALLER OR TECHNICAL HELP LINE: 01926 834834

RESET LOCK-OUT CODES

ERROR CODE	DESCRIPTION	REASON	ACTION	RESET POSSIBLE
1	Overheated appliance	CH Water temperature greater than 105°C	•Check no air is in heat exchanger / CH system •Check external pump operation •Check PCB / X1C connector •Check flow thermistor •Check wires to sensors not crossed	Yes
2	Different check faulty / Flame for 15 seconds	Sensor temperature differential incorrect	• Check water pressure • Check external pump / CH system blockage • Check no air is in heat exchanger / CH system • Check flow, and return sensors	Auto Restart When Fixed
3	No gas or Lockout flame signal / No flame, Lockout after 5 ignition attempts	Low gas pressure. Loss of flame signal during operation	• Check gas supply • Check gas service cock • Check gas valve and lead • Check detection electrode / lead • Check PCB / X2A & X2B connectors • Check spark generator /spark electrode • Check mains earth lead continuity	Yes
4	Flue gas sensor / No flame	Flue gas temperature greater than 95°C	• Check flue sensor • Check flue system • Check no air is in heat exchanger / CH system • Check external pump • Check PCB / PCB connectors	Yes

BLOCKING CODES

ERROR CODE	DESCRIPTION	REASON	ACTION	RESET POSSIBLE
5	Defective sensor or thermal fuse blown	Defective flow, return or flue sensor or heat exchanger reached maximum safe working temperature	• Check wiring to sensors • Check PCB / X6 & X8 connectors • Check flow, return and flue sensors • CHECK THERMAL FUSE IS OPEN CIRCUIT. IF SO REPLACE HEAT EXCHANGER (SEE 10.8)	Auto Restart When Fixed
6	Defective gas valve / Flame continues after demand ends	5 sec flame signal after burner is switched off	• Check gas valve and lead • Check PCB	
7	Defective fan / No flame	Missing or Erroneous RPM signal	• Check fan • Check mains fan lead & connector • Check low voltage fan lead & connector • Check PCB / X3 connector	
A	PCB error / No flame	Internal error	• Check PCB	
b	Activate BCC / No flame	New BCC	• Turn CH control knob to reset twice to activate	
C	Safety system failure / No flame	Failure of internal self checking system	• Check PCB • Check BCC is initialised	
E	BCC error / No flame	Incorrect / missing BCC	• Reset or replace BCC	
h	No flame	Faulty connector	• Check PCB / X1A connector	
0	Different check faulty / Flame for 15 seconds	Water flow rate too low	• Check water pressure • Check external pump / CH system blockage • Check no air is in heat exchanger / CH system • Check wires to sensors not crossed • Check flow, and return sensors	
P	Error in power supply / No flame	Low mains voltage	• Check mains voltage • Check PCB connectors	
	No light indication	Defective power supply	• Check power supply • Check PCB / X1B connector • Check PCB fuse	

© Dimplex Boilers 2008

IBASIS.COUK IBASIS.COUK IBASIS.COUK

spares & parts online IBASIS.co.uk

16.0 SPARE PARTS

dimplex

16.1 SHORT PARTS LIST

Key	GC Number	Description	QTY	Pt. No.
1	H29-740	Electrode - Ignition c/w Gasket	1	988526
2	H38-213	Detection Electrode c/w Gasket	1	988540
3	H29-236	Spark Generator c/w Lead	1	500665
4a	TBA	18 kW gas control valve assembly NG	1	988315
4b	TBA	32 kW gas control valve assembly NG	1	988316
5	TBA	Fan Assembly	1	601015
6a	H29-171	Burner (18 kW)	1	700600
6b	H29-173	Burner (32 kW)	1	700602
7	TBA	Burner Door Insulation	1	352671
8a	H38-217	Heat Exchanger (18 kW)	1	451150
8b	H38-218	Heat Exchanger (32 kW)	1	451158
9	H29-213	Water Temperature sensor	2	500661
10	H29-178	Flue Thermistor	1	500662
11a	TBA	Dimplex 18 kW NG PCB Kit	1	988491
11b	TBA	Dimplex 32 kW NG PCB Kit	1	988567
12	TBA	User Interface	1	500736
13	H29-148	Heat Exchanger seal & Clip Kit	1	988546

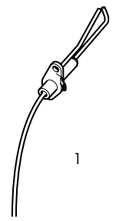
1

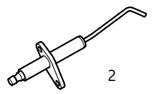
2

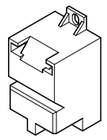
3

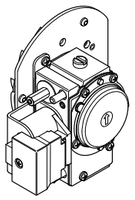
4

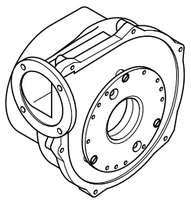
5

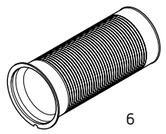
6

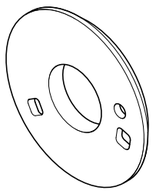
7

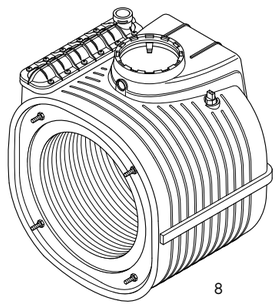
8

9

10

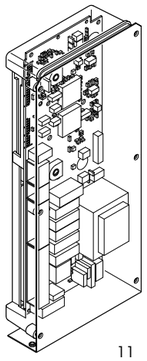
11

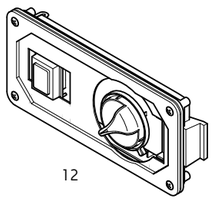
12

13

© Dimplex Boilers 2008

4.0 TECHNICAL DATA

dimplex

4.1 APPLIANCE CLASSIFICATION = C13, C33, C53, B23

Performance Data

Appliance			18	32
Mode	Rate			
Central Heating Output (non-condensing)(80-60°C)	Max	kW	18.0	30.7
	Min	kW	5.9	9.6
Central Heating Output (condensing)(50-30°C)	Max	kW	19.7	33.6
Central Heating Input Max Rate	Net	kW	18.4	31.4
	Gross	kW	20.4	34.9
Central Heating Input Min Rate	Net	kW	5.4	9.0
	Gross	kW	6.0	10.0
Central Heating Gas Rate (after 10 min operation - hot)	Max	m^3/h	1.95	3.32
Seasonal Efficiency		%	91.1	91.7
Seasonal Efficiency (SEDBUK)		Band	"A"	"A"
Nox Classification		Class	"5"	"5"
Min Central Heating System Pressure		Bar	0.1	0.1
Max Central Heating System Pressure		Bar	3.0	3.0
Max Central Heating Flow Temperature		°C	80	80
Min Central Heating Flow Temperature		°C	30	30
General Specifications				
Total weight (full)		kg	24.3	27.4
Total weight (empty)		kg	23.0	25.4
Max lift weight		kg	23.0	25.4
Total water capacity		Ltr	1.3	1.95
Electrical supply			230V 50Hz Fuse at 3A	
Internal fuse			T4H 4A 250V	
Maximum power consumption		W	30	50
IP Rating			IPX4	IPX4
CO_2 value max rate (Nat Gas) (Case must be fitted when taking reading)		%	8.8-9.2	8.9-9.3
CO_2 value min rate (Nat Gas) (Case must be fitted when taking reading)		%	8.5-8.9	8.1-8.5
CO value max rate (Nat Gas) (Case must be fitted when taking reading)		P.P.M	15-60	40-120
CO value min rate (Nat Gas) (Case must be fitted when taking reading)		P.P.M	0-40	0-40
CO_2 value max rate (Propane) (Case must be fitted when taking reading)		%	10.8-11.2	10.7-11.1
CO_2 value min rate (Propane) (Case must be fitted when taking reading)		%	10.4-10.8	10.3-10.7
CO value max rate (Propane) (Case must be fitted when taking reading)		P.P.M	110-150	120-180
CO value min rate (Propane) (Case must be fitted when taking reading)		P.P.M	0-40	0-40
Gas Pressure - Natural Gas		mbar	18-20	18-20
Gas Pressure - Propane		mbar	37	37
Connections				
Gas			22 mm compression	
CH flow			28 mm compression	
CH return			28 mm compression	
Condensate Drain			21.5 - 22 mm plastic overflow pipe	
⚠ Minimum Water Flow Rates		Ltr/Min	4	8

P.P.M = Parts Per Million

© Dimplex Boilers 2008

IBASIS.co.uk

5.0 DIMENSIONS

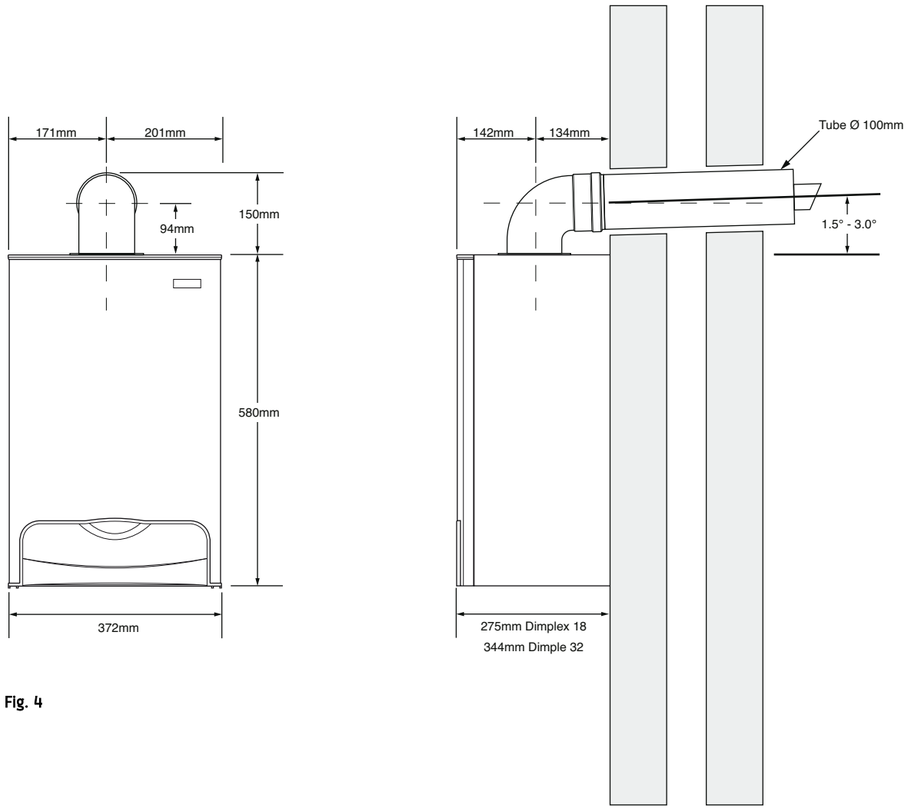

Fig. 4

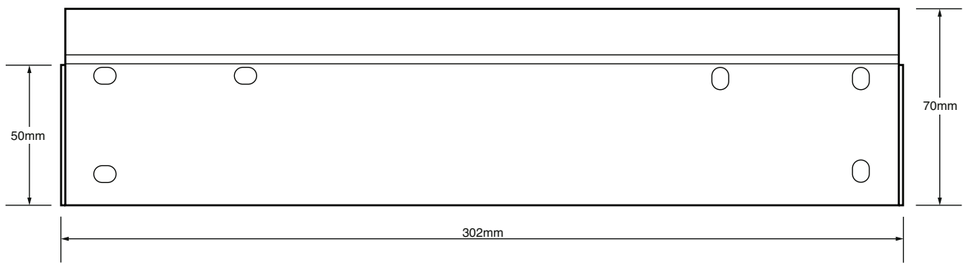

Fig. 5

© Dimplex Boilers 2008

15.0 ELECTRICAL

15.1 ILLUSTRATED WIRING DIAGRAM

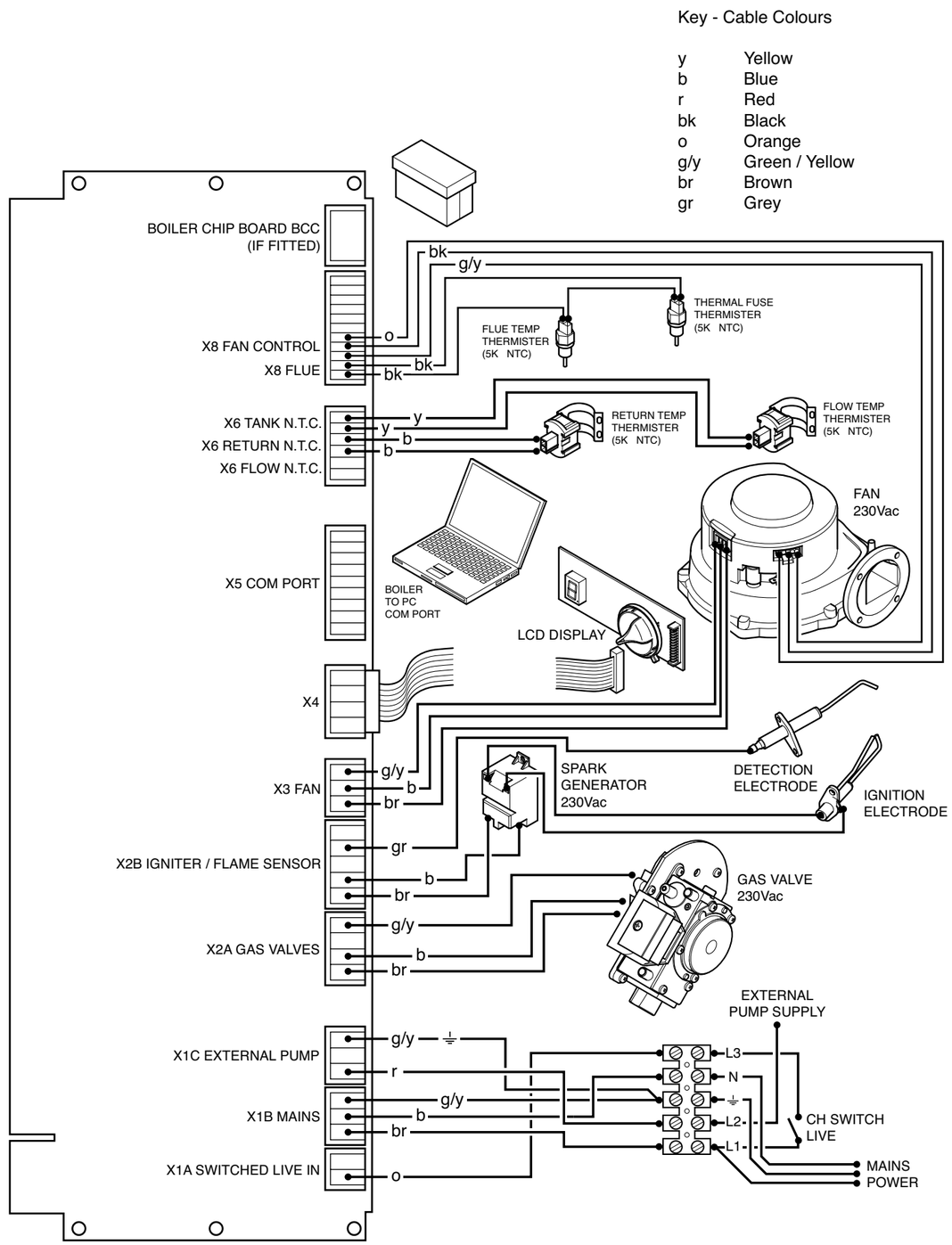

spares & parts online IBASIS.COUK

14.12 MAIN HEAT EXCHANGER

1. Drain the primary circuit.

2. Remove the electrode leads, noting their positions. Remove the electrodes as described in section 14.2.

3. Remove the valve and fan assembly as described in Section 14.3.

4. Examine the gasket and replace if necessary.

5. Undo the four nuts securing the combustion box cover plate and remove the cover plate from the combustion box.

6. Remove the two clips and the temperature thermistors from the flow and return pipes on the top of the heat exchanger and slide out the pipes.

7. Remove the four screws holding the left and right hand retaining brackets and remove the brackets.

8. Carefully slide the heat exchanger out of the boiler.

9. Reassemble in reverse order.

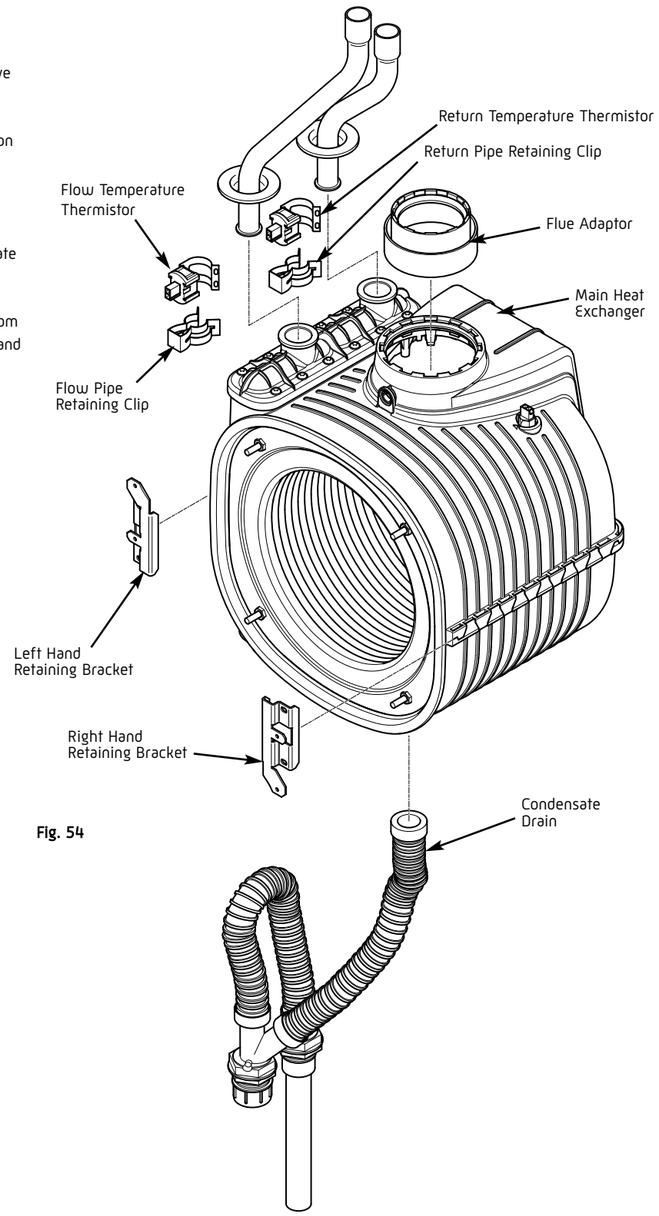

Fig. 54

© Dimplex Boilers 2008

6.1 CENTRAL HEATING CIRCUIT

1. The appliance is suitable for fully pumped SYSTEMS ONLY.

Treatment of Water Circulating Systems

Failure to flush and add inhibitor to the system will invalidate the appliance warranty.

• Central heating water systems will be subject to corrosion unless an appropriate water treatment is applied. This means that the efficiency of the system will deteriorate as corrosion sludge accumulates within the system, risking damage to pump and valves, boiler noise and circulation problems.

• When fitting new systems flux will be evident within the system, which can lead to damage of system components.

• All systems must be thoroughly drained and flushed out. Using, for example Betz-Dearborn Sentinel X300 or X400 or Fernox Superfloc Universal Cleanser. They should be used following the flushing agent manufacturer's instructions.

• System additives - corrosion inhibitors and flushing agents/descalers should comply to BS7593 requirements, e.g. Betz-Dearborn Sentinel X300 and Fernox-Copal which should be used following the inhibitor manufacturer's instructions.

• It is important to check the inhibitor concentration after installation, system modification and at every service in accordance with the manufacturer's instructions. (Test kits are available from inhibitor stockists.)

• For information or advice regarding any of the above contact Technical Enquiries.

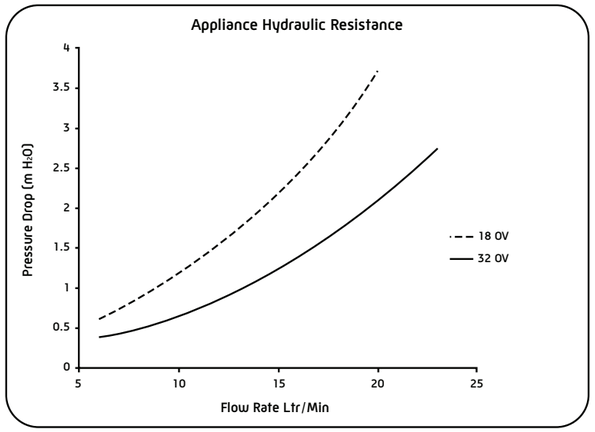

Fig. 6

TYPICAL OPEN VENT SYSTEM AND CONTROLS LAYOUT WITH MID POSITION DIVERTER VALVE

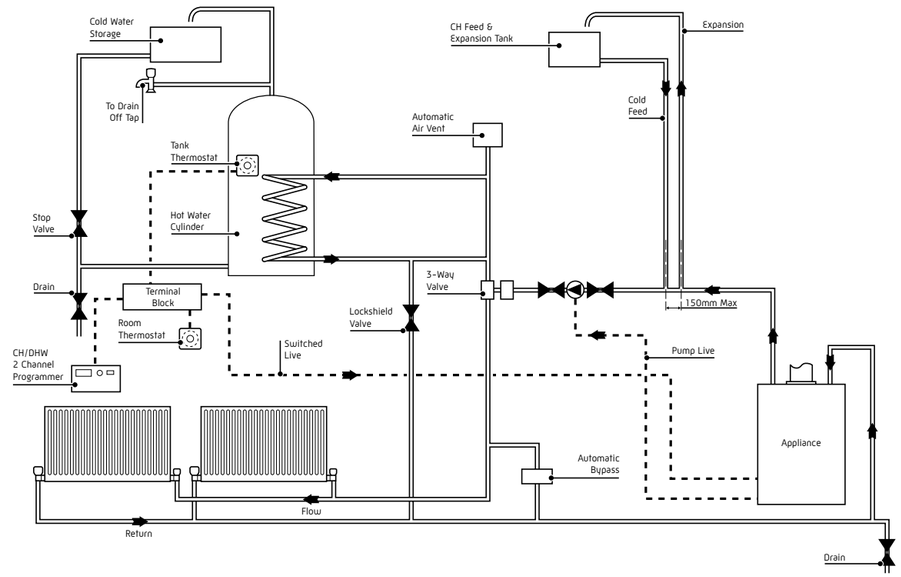

Fig. 7

NOTE: Flow and return pipes, including any pipe branches taken from them, must be in copper pipe for a minimum of 1 metre when measured from the boiler connection.

NOTE: The central heating system should be designed and balanced to ensure a minimum and maximum temperature differential of 10°C & 20°C respectively when the appliance is operating at maximum heat output.

© Dimplex Boilers 2008

IBASIS.COUK IBASIS.COUK IBASIS.COUK

spares & parts online IBASIS.co.uk

7.0 SITE REQUIREMENTS

dimplex

7.1 LOCATION

1. The boiler may be fitted to any suitable wall with the flue passing through an outside wall or roof and discharging to atmosphere in a position permitting satisfactory removal of combustion products and providing an adequate air supply. The boiler should be fitted within the building unless otherwise protected by a suitable enclosure i.e. garage or outhouse. (The boiler may be fitted inside a cupboard).

2. If the boiler is fitted in a room containing a bath or shower reference must be made to the relevant requirements. The boiler can be fitted in zones 2 or 3.
In GB this is the current I.E.E. Wiring Regulations and Building Regulations.
In IE reference should be made to the current edition of I.S. 813 "Domestic Gas Installations" and current ETCI rules.

3. (Figs. 8 & 9 shows zone dimensions for a bathroom. For other examples refer to Section 601 of the current I.E.E. Wiring Regulations) reference must be made to the relevant requirements.
In GB this is the current I.E.E. Wiring Regulations and Building Regulations.
In IE reference should be made to the current edition of I.S. 813 "Domestic Gas Installations" and the current ETCI rules.

4. If the boiler is to be fitted into a building of timber frame constructions then reference must be made to the current edition of Institute of Gas Engineers Publication IGE/UP/7 (Gas Installations in Timber Framed Housing).

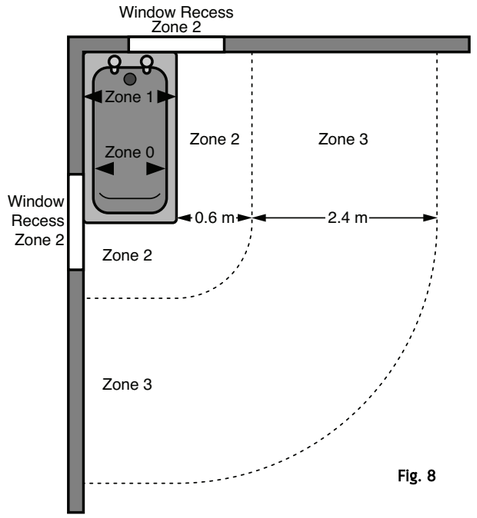

Fig. 8

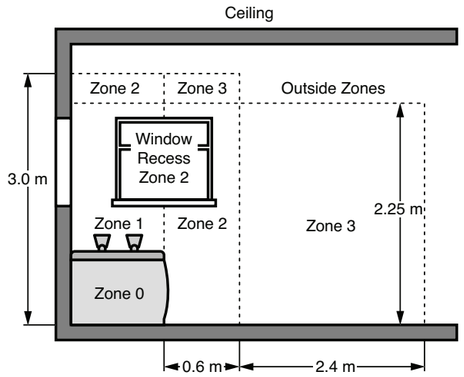

Fig. 9

7.2 CLEARANCES

1. A flat vertical area is required for the installation of the boiler.

2. These dimensions include the necessary clearance around the boiler for case removal, spanner access and air movement. Additional clearances may be required for the passage of pipes around local obstructions such as joists running parallel to the front face of the boiler.

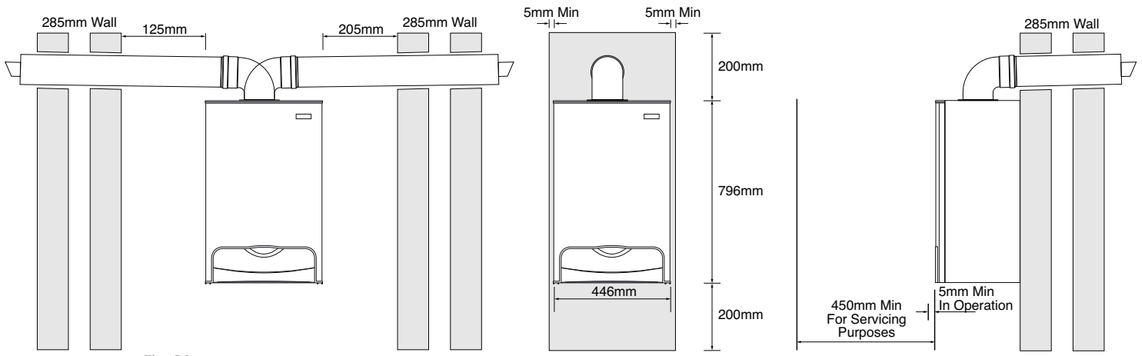

Fig. 10

© Dimplex Boilers 2008

14.0 CHANGING COMPONENTS

dimplex

14.10 PCB

1. Unclip the control panel from its bracket then remove the three screws from the underside of the boiler holding the bracket in place.

2. Note the position of all the connections on the P.C.B. and disconnect them.

3. From below the boiler, remove the two screws securing the PCB bracket in place and remove from the boiler.

4. Remove the six screws holding the PCB box to the bracket.

5. Locate the retaining barbs in the corners and remove the PCB carefully.

6. Unless specifically instructed **NOT** to do so by the Dimplex Service Department, always fit the new BCC if supplied with the replacement PCB.

NOTE: Always double check the label on the BCC card to ensure it is the correct BCC for the boiler model to which it is being fitted. **NEVER FIT AN INCORRECT BCC.**

7. Disconnect the ribbon cable from the PCB.

8. Connect ribbon cable to new PCB.

9. Fit the new PCB and re-assemble in reverse order.

10. If the boiler requires resetting turn the CH Temperature Control Knob anti-clockwise to 'STANDBY' position and then back to 'ON' within two seconds.

14.11 CONTROL PANEL

1. Remove the four screws on the front of the control panel.

2. This will enable the circuit board or the ribbon cable to be replaced on the control panel.

3. Re-assemble in reverse order.

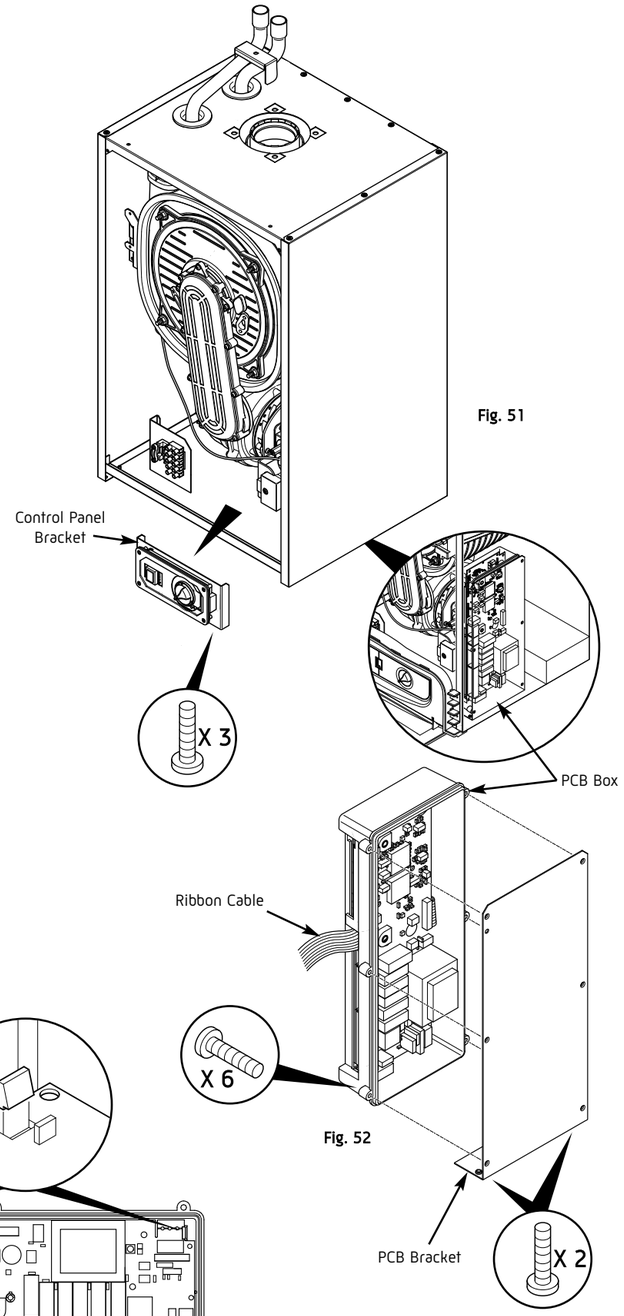

Fig. 51

Fig. 52

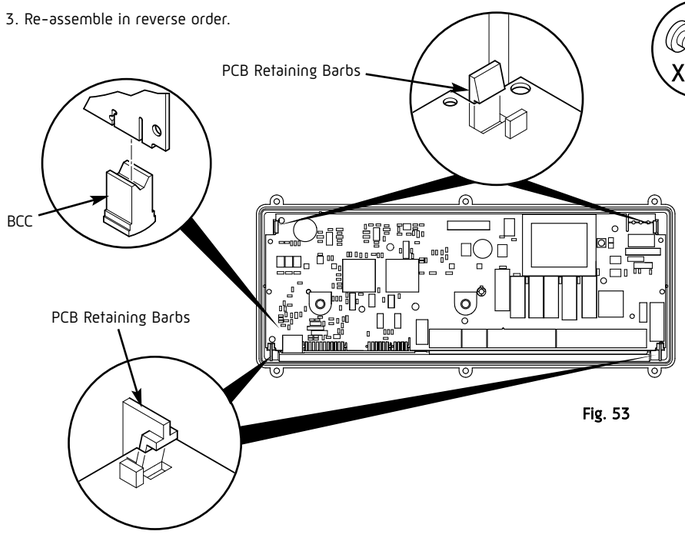

Fig. 53

© Dimplex Boilers 2008

IBASIS.co.uk

spares & parts online IBASIS.co.uk

14.0 CHANGING COMPONENTS

dimplex

14.6 FLUE/HEAT TEMPERATURE THERMOSTAT

1. Disconnect the electrical plug.

2. Turn the sensor 90° anticlockwise to remove - it is a bayonet connection.

3. Reassemble in reverse order.

14.7 THERMAL FUSE

1. The thermal fuse is non-changeable. If the fuse fails contact Dimplex Technical Department.

14.8 FLOW TEMPERATURE THERMISTOR

1. Disconnect the electrical plug.

2. Ease the sensor clip away from the pipe and remove.

3. Reassemble in reverse order.

14.9 RETURN TEMPERATURE THERMISTOR

1. Disconnect the electrical plug.

2. Ease the sensor clip away from the pipe and remove.

3. Reassemble in reverse order.

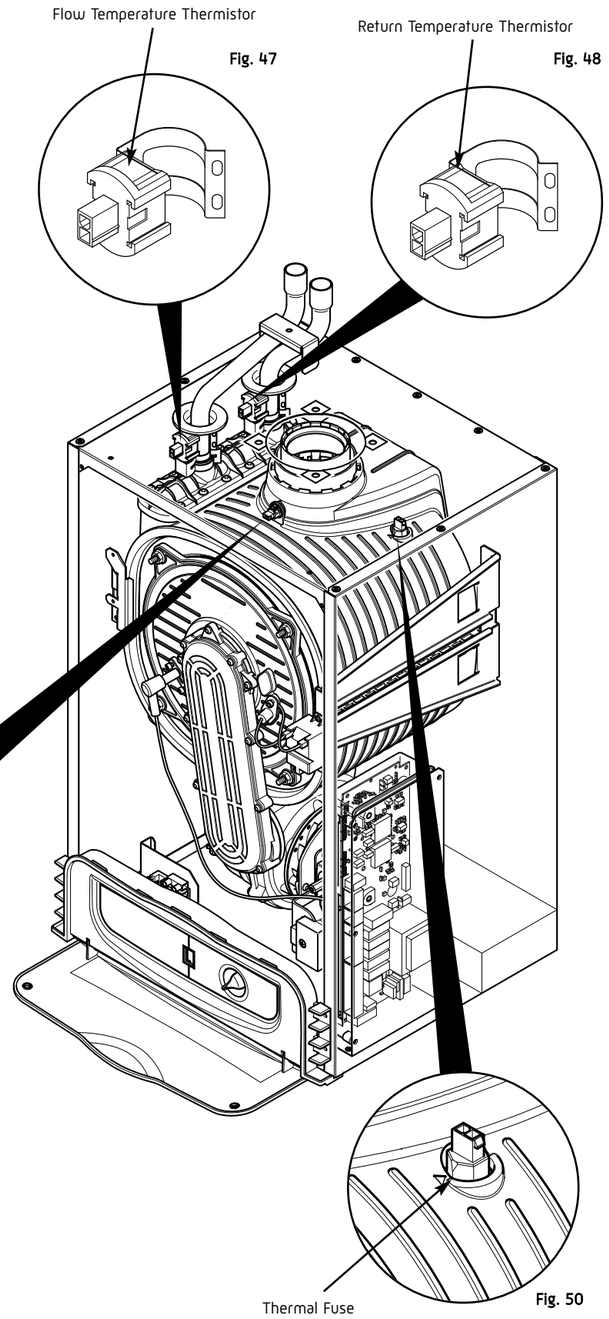

Fig. 47

Fig. 48

Fig. 49

Fig. 50

© Dimplex Boilers 2008

7.0 SITE REQUIREMENTS

dimplex

7.3 VENTILATION OF COMPARTMENTS

1. Where the appliance is installed in a cupboard or compartment, no air vents are required.
Where an open flued system is used - Flue kit E (B23 classification) then an air vent communicating directly with outside air must be provided in the same room or internal space of the flue duct air inlet. Minimum free area:

Dimplex 18 = 60cm^2
Dimplex 32 = 125cm^2

In addition if an open flued system is used - Flue kit E (B23 classification) and the boiler is fitted in a compartment, then high and low level ventilation is required.
BS 5440-2:2000 gives guidance on compartmental ventilation.

2. When the boiler is installed in a cupboard or compartment and either flue kit A, B, C, D or F (Classification C13, C33, C53) is used, then no compartmental ventilation is required.

7.4 GAS SUPPLY

1. The gas installation should be in accordance with the relevant standards. In GB this is BS 6891. In IE this is the current edition of I.S. 813 "Domestic Gas Installations".

2. The connection to the appliance is a 22mm copper tail located at the rear of the gas service cock (Fig. 11).

3. Ensure that the pipework from the meter to the appliance is of adequate size, and the demands of any other gas appliance in the property are taken into consideration. On the 32 OV model, do not use pipes of a smaller diameter than the boiler gas connection.

4. For boilers connected to use LPG (propane), the inlet pressure must be 37mbar.

NOTE: The completed installation should always be tested for gas tightness

7.5 ELECTRICAL SUPPLY

1. External wiring must be correctly earthed, polarised and in accordance with relevant regulations/rules. In GB this is the current I.E.E. Wiring Regulations. In IE reference should be made to the current edition of the ETGI rules.

2. The mains supply is 230V - 50H$_Z$ fused at 3A

NOTE: The mains supply connection must allow complete electrical isolation of the appliance and system controls only.
Connection may be via a fused double-pole isolator with a contact separation of at least 3mm in all poles and servicing the boiler and system controls only.
Any additional mains cable should comply fully with the current I.E.E. wiring regulations.

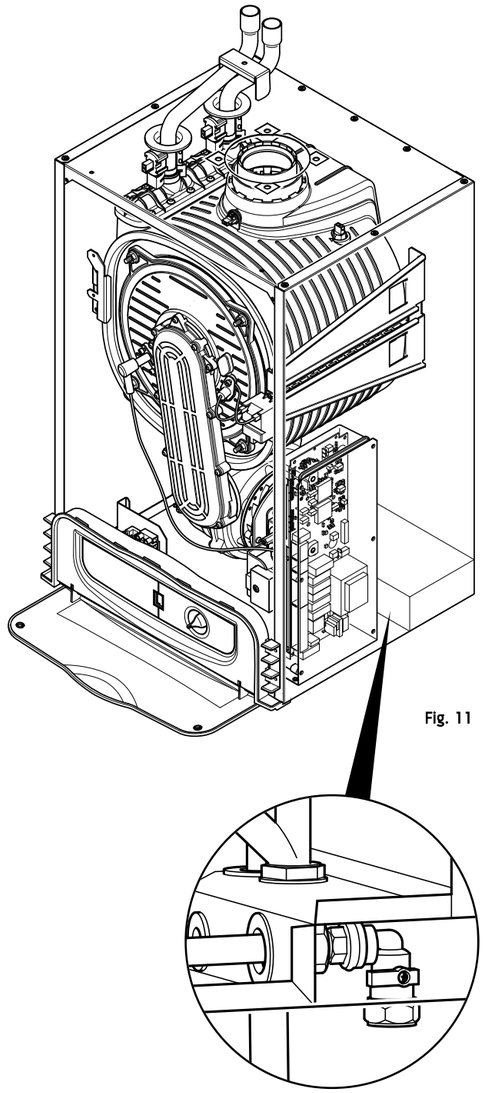

Fig. 11

© Dimplex Boilers 2008

IBASIS.co.uk

spares & parts online IBASIS.COUK

7.6 CONDENSATE DRAIN

NOTE: The appliance is fitted with a trap the depth of which is >= 75mm, therefore no other traps are required in the condensate run.

The condensation discharge pipe must not rise at any point along its length. There MUST be a fall of AT LEAST 2.5° (50mm per metre) along the entire run.

1. The condensate outlet will accept 21.5mm (3/4 in) plastic overflow pipe which should discharge internally into the household drainage system, downstream of all other traps. if this is not possible, discharge into an outside drain is acceptable.

2. Ensure the discharge of condensate complies with any national or local regulations in force.
BS 6798:2000 & Part HI of the Building Regulations give further guidance.

3. Metal pipework is NOT suitable for use in condensate discharge systems.

4. The pipe should be a minimum of 21.5mm diameter and must be supported properly.

5. **It is advisable to keep the condensate pipe internal.**

6. **External runs greater than 3 metres or runs in cold areas should use 32mm waste pipe.**

7. If the boiler is fitted in an unheated location the entire condensate discharge pipe should be treated as an external run.

8. In all cases discharge pipe must be installed to aid disposal of the condensate.

9. When discharging condensate into a soil stack or waste pipe the effects of existing plumbing must be considered. If soil pipes or waste pipes are subjected to internal pressure fluctuations when WC's are flushed or sinks emptied then back-pressure may force water out of the boiler trap and cause appliance lockout.
Examples are shown of the following methods of terminations:-
i) to an internal soil & vent pipe
ii) via and internal discharge branch (e.g. sink waste)
iii) to a drain or gully
iv) to a purpose made soakaway

10. In exceptional circumstances, such as when a boiler is installed in a basement without drainage, it may be necessary to install a condensate pump to carry condensate up to ground/drain level. Such products are available from most plumbing merchants. For help with selecting a condensate pump contact Dimplex Boilers - Tel: 0844 3711121.

WARNING: There must be no air breaks in the condensate pipework or drainage system.

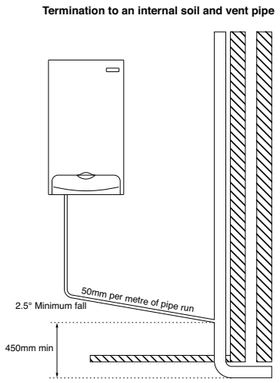

Fig. 12

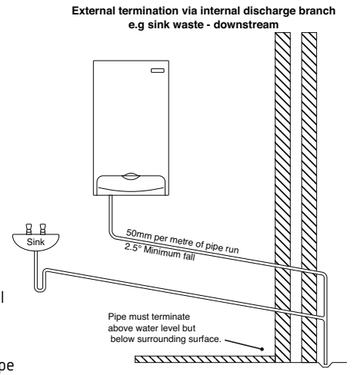

Fig. 13

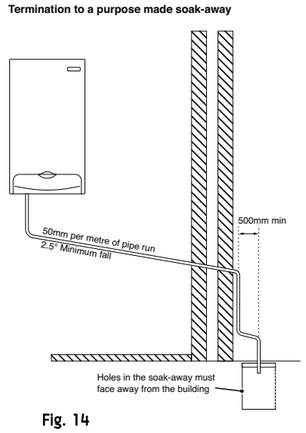

Fig. 14

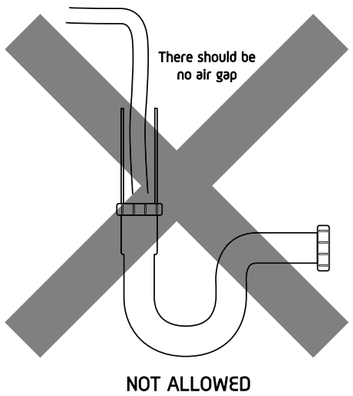

Fig. 15

© Dimplex Boilers 2008

14.4 BURNER

1. Remove the valve and fan assembly as described in Section 14.3.

2. Examine the gasket and replace if necessary.

3. Undo the four nuts securing the combustion box cover plate and remove the cover plate from the combustion box.

4. Slowly withdraw the burner from the combustion box cover plate taking care not to damage the insulation.

5. Reassemble in reverse order.

14.5 INSULATION

1. Remove the electrode leads, noting their positions. Remove the electrodes as described in section 14.2.

2. Remove the valve and fan assembly as described in Section 14.3.

3. Examine the gasket and replace if necessary.

4. Undo the four nuts securing the combustion box cover plate and remove the cover plate from the combustion box.

5. Slowly withdraw the burner from the combustion box cover plate.

6. Replace the insulation if necessary.

7. Check the cover plate seal.

8. The rear insulation is retained by a screw and large washer, remove these and draw the insulation out of the heat exchanger.

9. Reassemble in reverse order.

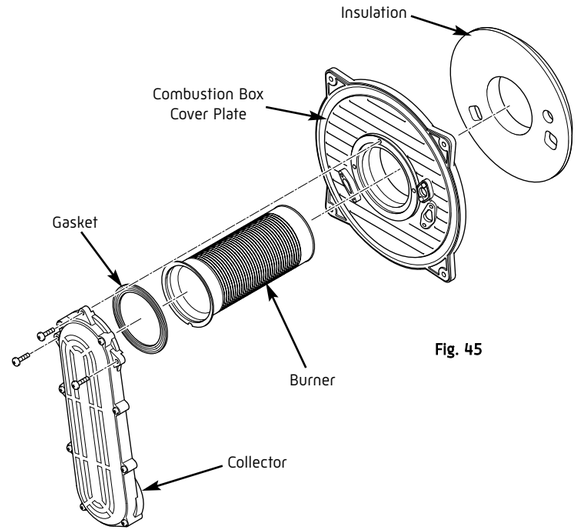

Fig. 45

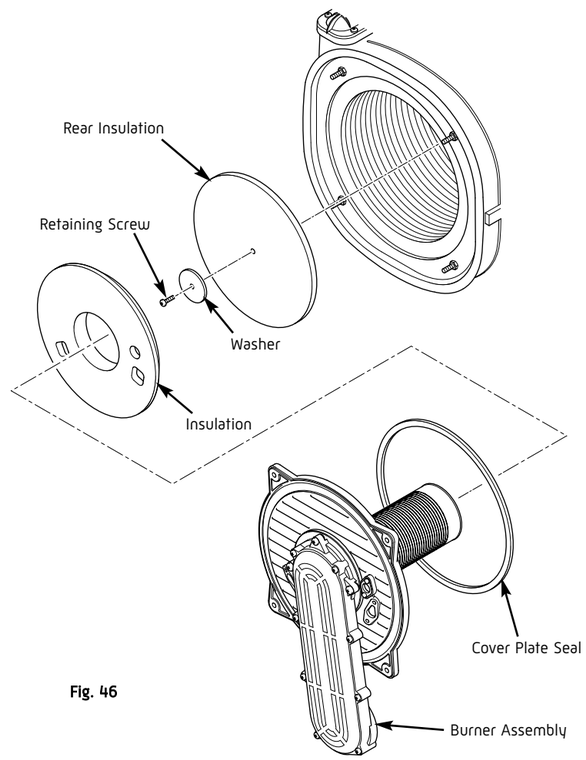

Fig. 46

© Dimplex Boilers 2008

IBASIS.COUK

spares & parts online IBASIS.COUK

14.3 GAS VALVE AND FAN

1. Disconnect the two leads to the fan and one lead to the gas valve.

2. Remove the three screws securing the control panel to the casing from the underside of the boiler.

3. Remove the three securing screws holding the collector to the combustion box cover plate and remove the valve and fan assembly.

4. Remove the four screws holding the valve to the swirl plate and remove the valve.

5. Remove the three screws securing the injector plate and swirl plate to the fan.

NOTE: Mark on the adaptor flange which holes are being used by the screws. Using the wrong holes on re-assembly will cause mis-alignment of the gas valve.

Fan Only

6. Remove the three screws holding the fan flange to the fan.

7. Remove the four screws securing the fan to the collector. Reassemble in reverse order ensuring all seals are in place.

NOTE: The gas valve throttle should be adjusted in accordance with the instructions supplied in the spares kit See Section 13.2.

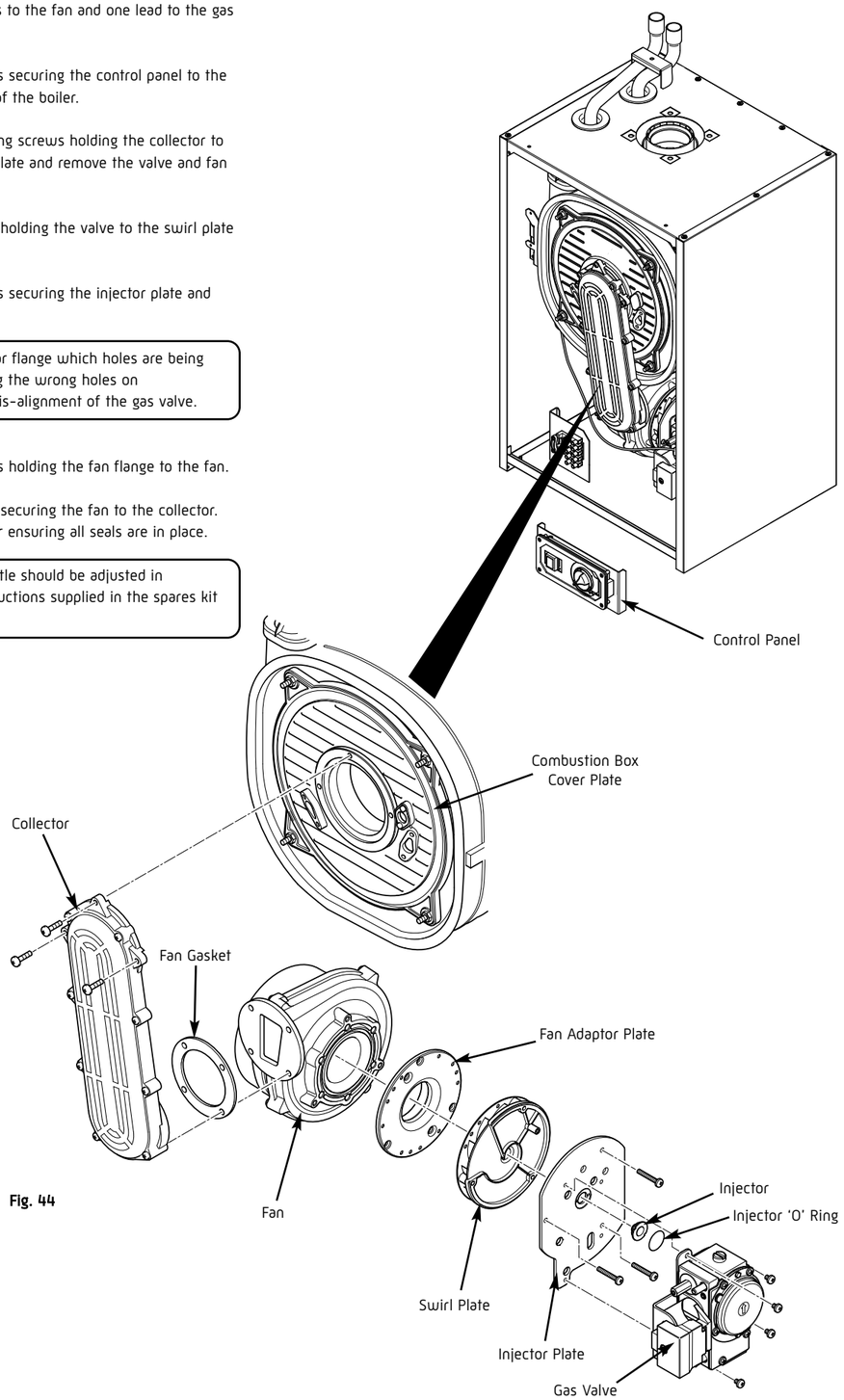

Fig. 44

© Dimplex Boilers 2008

7.7 FLUE

1. This high efficiency boiler will discharge a plume of water vapour from the flue. This should be considered when siting the flue terminal.

2. The following guidelines indicate the general requirements for siting balanced flue terminals. For GB recommendations are given in BS 5440 Pt 1. For IE recommendations are given in the current edition of I.S. 813 "Domestic Gas Installations".

3. If the terminal discharges onto a pathway or passageway, check that combustion products will not cause a nuisance and that the terminal will not obstruct the passageway.

4. If a terminal is less than 2 metres above a balcony,above ground or above a flat roof to which people have access, then a suitable terminal guard must be provided - Part No: 951507.

IMPORTANT:
- Only **ONE** of the 25mm clearances (Positions 'O' to 'S' in the chart below) is allowable per installation.
- Under car ports we recommend the use of the plume displacement kit.
- The terminal position must ensure the safe and nuisance - free dispersal of combustion products.

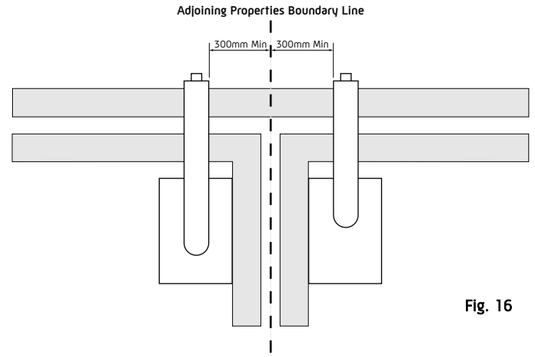

Fig. 16

NOTE: The minimum distance from a flue terminal to a boundary line is 300mm.

If fitting a plume diverter kit, the air inlet should be a minimum of 100mm from any opening windows or doors.

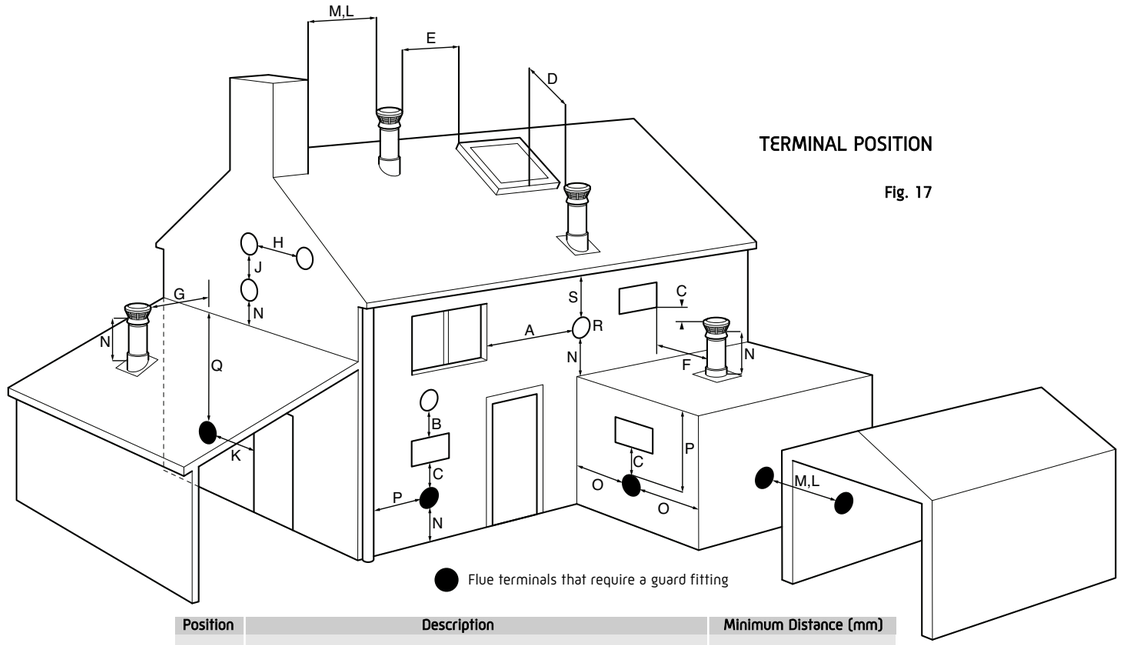

TERMINAL POSITION

Fig. 17

Position	Description	Minimum Distance (mm)
A	Horizontally to an opening, air brick, opening window - see note A	300
B	Above an opening, air brick, opening window etc. - see note A	300
C	Below an opening, air brick, opening window etc. - see note A	300
D	Below windows or openings on pitched roofs	2000
E	Adjacent to windows or openings on pitched and flat roofs	600
F	From an adjacent opening window (vertical only)	1000
G	From an adjacent wall to flue (vertical only)	300
H	Horizontally from a terminal on the same wall	300
J	Vertically from a terminal on the same wall	1500
K	From an opening in a carport (e.g. door, window) into the dwelling	1200
L	From a terminal facing a terminal (horizontal flue)	1200
	From a terminal facing a terminal (vertical flue)	600
M	From a surface or boundary line facing a terminal	600
N	Above ground, roof or balcony level	300
O	From an internal or external corner	25
P	From a vertical drain pipe or soil pipe	25
Q	Below balconies or car port roof	25
R	Below eaves	25
S	Below gutters, soil pipes or drain pipes	25

NOTE: Fitting of the deflector elbow is recommended when installing boiler to minimum clearance of 25mm as detailed in positions O & P.

NOTE A: A terminal should be no closer than 150mm to an opening in the brickwork intended to accommodate a fitting such as a window frame.

© Dimplex Boilers 2008

spares & parts online IBASIS.COUK

8.0 FLUE OPTIONS

dimplex

8.1 CONCENTRIC AIR/FLUE DUCT SPECIFICATIONS

The Dimplex 18 OV and Dimplex 32 OV can be installed to a number of different concentric flue systems. The different flue applications as shown in Fig. 18 are available as kits comprising the connecting parts to the appliance and end terminal. Flue extension ducts and extension elbows are available as accessories.

Note: Dimplex 18 OV and 32 OV with maximum concentric flue length of 10m, the heat input will be reduced by 7.5%

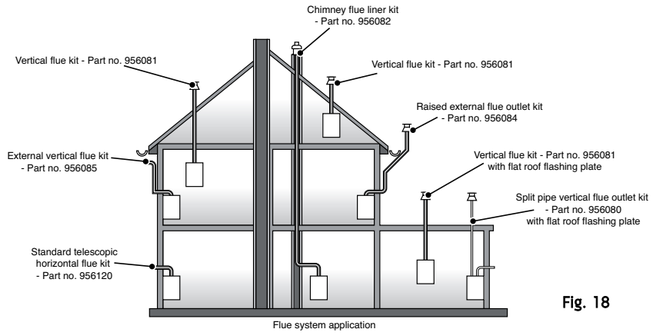

Fig. 18

8.2 Kit A + Telescopic Horizontal Wall Terminal (C13) - Part No. 956120

Traditional concentric flue system, Fig. 19, with a maximum length of 10000mm. The flanged flue elbow is designed with a 3° slope towards the appliance so that the condensate can easily drain off. It has to be considered that for every metre horizontal flue length the terminal exit centreline is approx. 45 mm higher than the elbow's centreline.
The standard telescopic terminal is 615mm max length and 430mm min length, but can be cut to a minimum flue length of 250mm, which is suitable for single, 100mm (4"), brick walls.

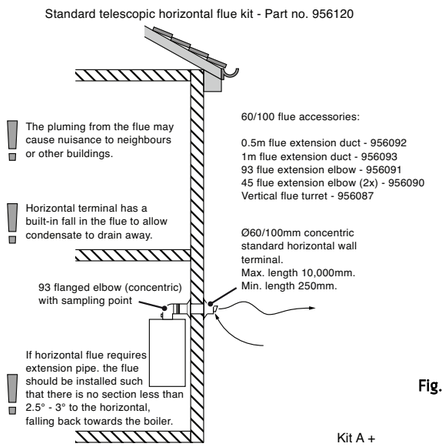

Fig. 19

8.3 Kit B Vertical Concentric Flue Terminal (C33) - HBL Part 956081

Standard concentric (100/60) vertical flue application, Fig. 20, through roof attics with a maximum length of 12000mm.
The kit comprises of the roof terminal, flashing kit, vertical adaptor with sampling point and bracket.
The maximum length is measured from the top of the appliance casing to the underside of the air cowl.
For installation details refer to the flue kit instructions.

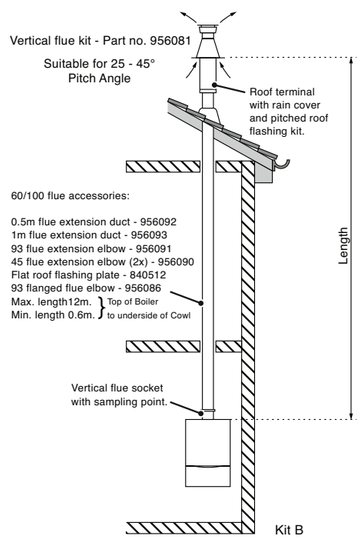

Fig. 20

© Dimplex Boilers 2008

14.0 CHANGING COMPONENTS

dimplex

IMPORTANT: When changing components ensure that both the gas and electrical supplies to the boiler are isolated before any work is started.

See Section 13.1 : "Annual Servicing" for removal of case, panel, door etc.

14.1 IGNITER

1. Disconnect the two feed wires, earth wire and electrode lead noting their positions.

2. Undo the two screws securing the igniter to its bracket and remove the igniter. Reassemble in reverse order.

14.2 SPARK AND SENSING ELECTRODES

1. Disconnect the electrode leads, noting their positions.

2. Using a 3mm Hex key, remove the retaining screws securing each of the electrodes to the combustion box cover and remove the electrodes.

3. Check the condition of the sealing gaskets and replace if necessary. Reassemble in reverse order.

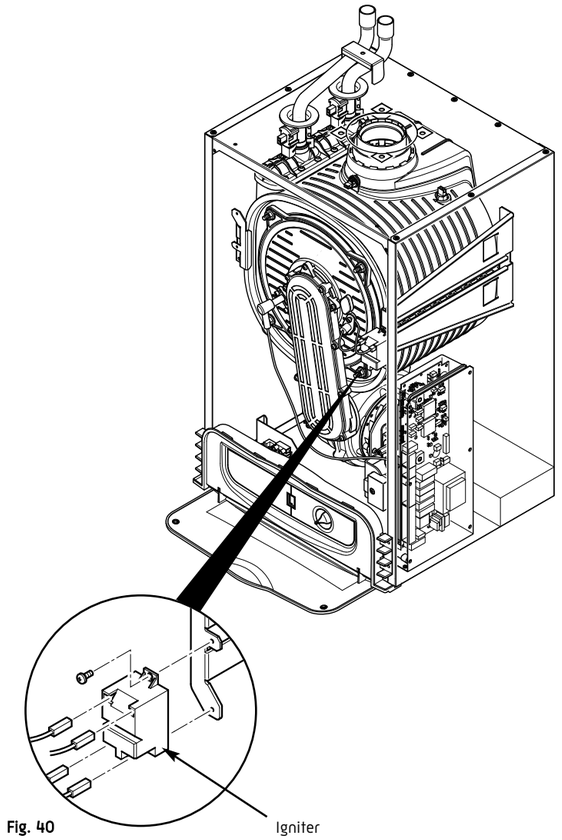

Fig. 40

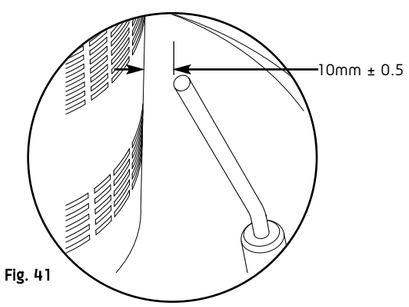

Fig. 41

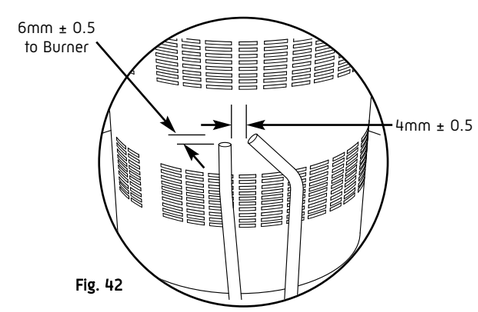

Fig. 42

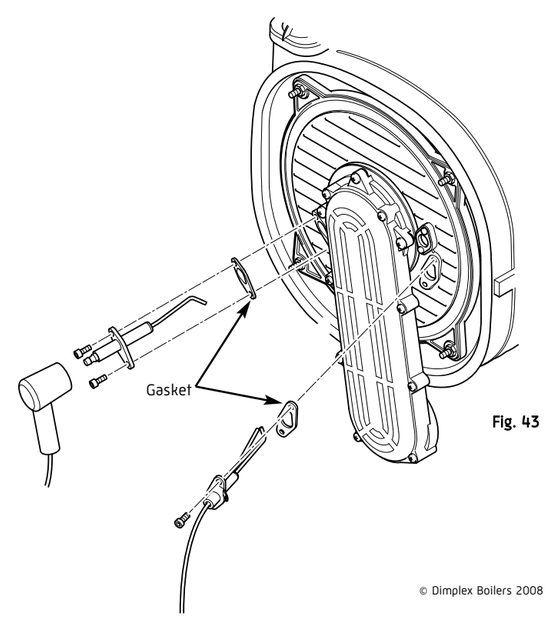

Fig. 43

© Dimplex Boilers 2008

IBASIS.COUK

751287 OV MANUAL 19/10/10 08:46 Page 17

13.4 ANNUAL SERVICING

IMPORTANT: When changing components ensure that both the gas and electrical supplies to the boiler are isolated before any work is started.

7. Remove the two screws securing the front panel to the underside of the boiler and the two screws on top of the boiler. Lift the panel upwards and away from the appliance.

8. Disconnect the two leads to the fan and one lead to the gas valve.

9. Remove the three screws securing the control panel to the casing from the underside of the boiler.

10. Remove the four nuts holding the combustion box cover plate and remove the valve and fan assembly (Fig. 38).

11. Clean any debris from the heat exchanger using a soft brush and check that the gaps between the tubes are clear.

12. Inspect the burner, electrodes position and insulation, cleaning or replacing if necessary. Clean any dirt or dust from the airbox.

13. Check the condition of the combustion box cover seal, replacing if necessary.

14. Reassemble in reverse order.

15. Complete the relevant Service Interval Record section of the Benchmark Commissioning Checklist at the rear of this publication and then hand it back to the user.

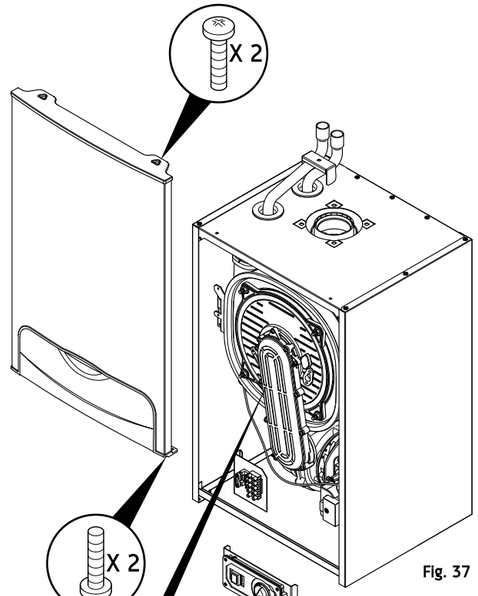

Fig. 37

Fig. 38

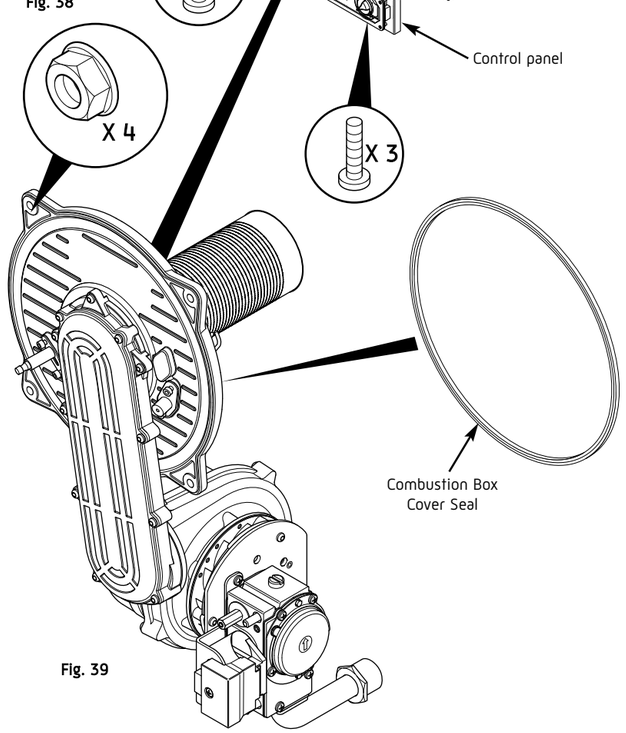

Fig. 39

© Dimplex Boilers 2008

8.4 Offset Vertical Flue Terminal (C33) - HBL Part 956081

'a' measured from boiler flue outlet centre line to the centre line of the extension elbow.
'b' measured from the top of the boiler to the underside of the air cowl.
Maximum allowable length of a + b = 8900mm

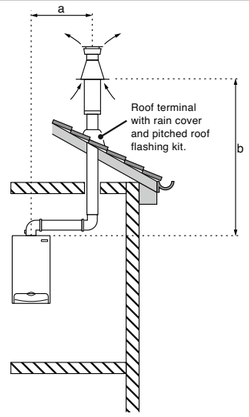

Fig. 21

8.5 Kit C Horizontal Anti-Plume Flue Kit (C13) - Part No. 956084

If the standard horizontal terminal is likely to cause nuisance to a neighbour or buildings, because of excess pluming, then this particular flue kit raises the flue gas outlet point to a higher elevation with the minimum amount of changes. The flue gas duct is teed-off from the concentric part and covered by an 80mm outer tube to protect the flue duct from freezing. The air in-take remains at the lower level (see Fig. 22).
If choosing this option then the external flue duct length should be taken into account when calculating equivalent flue length.
For installation details refer to the flue kit instructions.
Dimensions from vertical terminals to opening windows should be in line with Fig. 19.

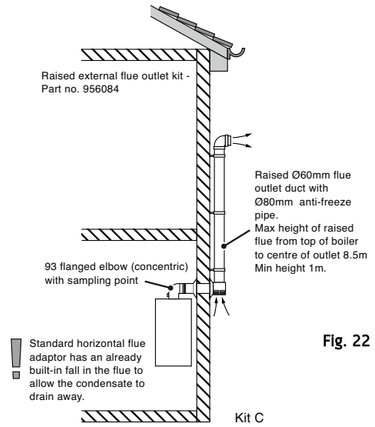

Fig. 22

8.6 Plume Diverter Terminal Kit Part No. 956103

(For use with Standard horizontal telescopic flue kit - Part no. 956120 - only).

This kit is provided to assist in fitting a condensing boiler with reduced clearances when fitted in good practice according to the Guide to Condensing Boiler Installation published by DEFRA/HMSO.

This kit allows the boiler flue outlet to be directed to the left or to the right only.

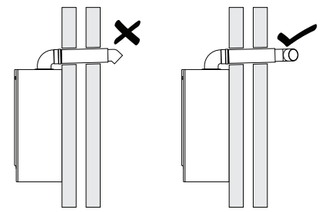

Fig. 23

8.7 Kit D External Vertical Flue (C33) - Part no. 956085

Suitable for installations if the appliance cannot be repositioned and where other horizontal flue options may cause some nuisance to neighbours or buildings. The flue kit contains some additional 45° elbows and extension ducts as well as a special wall bracket to pass the guttering (see Fig. 24). The concentric flue will be routed vertically alongside the outside wall to above the roofline. Special seals are required to prevent rainwater penetrating the pipe joints.
For installation details refer to the flue kit instructions.

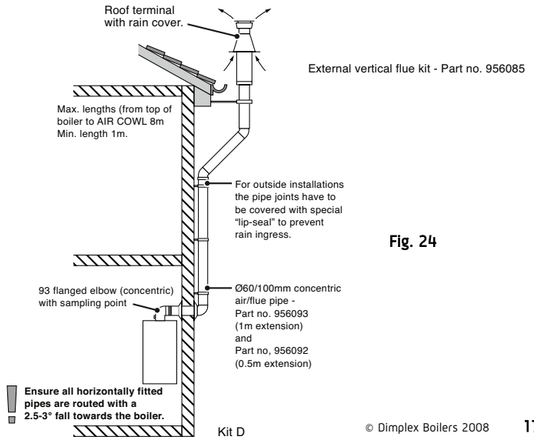

Fig. 24

© Dimplex Boilers 2008

spares & parts online IBASIS.co.uk

8.8 Kit E Chimney Flue Liner Kit (B23) - Part no. 956082

This kit is suitable for open flue application in accordance with BS5440 where a room sealed flue installation is impractical. The kit comprises of a flue adaptor from the appliance to the chimney, a flexible plastic flue liner with connection parts and chimney terminal (see Fig. 25). Where an open flue system is used, then an air vent must be provided in the same room or internal space as the flue duct air inlet, see section 7.3.
For installation details refer to the flue kit instructions.
Maximum flue resistive length = 30m.

A flue system can be built up from the components detailed in table 8.10, but the total flue resistance must not exceed the maximum stated.

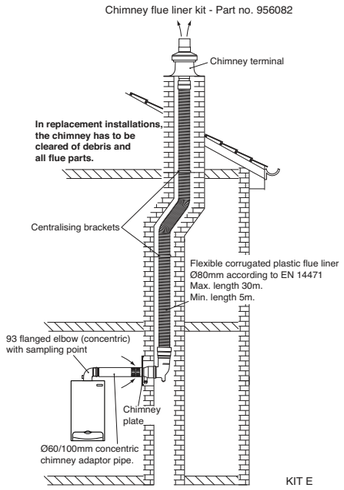

Fig. 25

8.9 Kit F: Twin Flue System (C53) - Part no. 956080

This flue system kit is designed for installations where the air intake position is different than the flue duct exit point. The kit comprises of a twin adaptor from which the air intake is taken from the adjacent outside wall (see Fig. 26) and the flue duct is routed vertically through the roof.
It has to be noted that the flue duct is under pressure when the appliance is in operation and the duct can leak poisonous carbon monoxide if the duct components are not correctly assembled. It is **not** recommended to route the flue duct through living space areas, i.e. bedrooms, living rooms etc.
For installation details refer to the instructions provided with the twin flued kit.
For C53 flue systems the terminal for the supply of combustion air and for the evacuation of combustion products shall not be installed on opposite walls of the building.

Maximum flue resistance permitted for a twin flued system = 52 Pa

Minimum flue resistance permitted for a twin flued system = 23.5 Pa

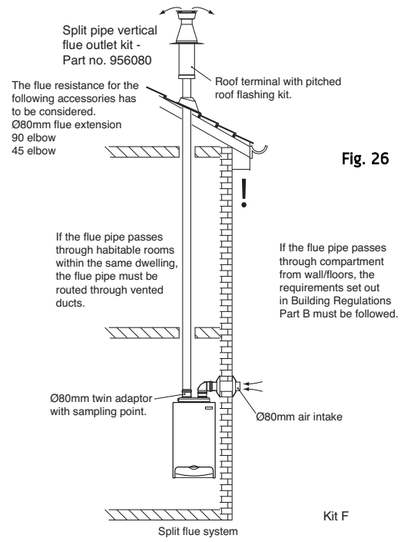

Fig. 26

Flue Component	Flue Resistance (Pa)	Part Number
Twin Flue Adaptor (required)	9.5	-
Air Inlet Terminal (required)	3	-
Chimney Terminal (required)	0.5	-
80 mm dia straight duct 1 metre	1	956101
80 mm dia straight duct 2 metre	2	956102
90° Elbow (80/80)	8	956100
45° Elbow (80/80)	4	956099
A flue system can be built up from the components detailed in the table, but the total flue resistance must not exceed the maximum stated.		

© Dimplex Boilers 2008

13.2 COMBUSTION CHECKS CONTINUED

COMBUSTION CHECKS AT MAXIMUM RATE
9. Set the boiler to Maximum gas rate see Section 11.2.

10. Check the Carbon Monoxide (CO) and Carbon Dioxide (CO_2) readings are within the range quoted in the table 2.

11. If the combustion value(s) is outside the values specified in Tables 1 and 2 and the integrity of the full flue system and combustion circuit seals, the inlet gas pressure and gas rate have been verified, it is possible to make an adjustment to the combustion settings by adjustment of the air/gas ratio valve. See Section 13.3 Adjustment of the Gas Valve.

13.3 ADJUSTMENT OF THE GAS/AIR RATIO VALVE

COMBUSTION SETTING ADJUSTMENT
1. It is only possible to adjust the valve at Maximum rate. No adjustment at Minimum rate is allowed.

2. If the maximum rate setting is adjusted, then the combustion values must be checked at minimum rate.

NOTE: DO NOT ATTEMPT TO ADJUST THE GAS/AIR RATIO VALVE UNLESS;
- The person carrying out the measurement has been assessed as competent in the use of a flue gas analyser and the interpretation of the results.
- The flue gas analyser used, meets the requirements of BS7927 or BS-EN50379-3.
- The flue gas analyser is calibrated in accordance with the manufacturers requirements.

3. At Maximum Gas Rate; put the appliance into Service Mode at Maximum Gas Rate (see Section 11).

4. Wait 5 minutes to allow the boiler to stabilise.

5. If the Carbon Dioxide (CO_2) level is outside the required values given in Section 13.2 (Table 2) then adjust the throttle screw (Fig. 36) until the CO_2 is at the correct setting level. See Table 4. Clockwise to decrease CO_2, anti-clockwise to increase CO_2.

NOTE: Only turn the throttle in small steps of **no more than 1/8th of a turn** and wait 1 minute after each adjustment for the combustion reading to stabilise.

IMPORTANT: After any adjustment of the gas valve, it is essential to check the combustion levels at minimum gas rate (Table 1). If the Carbon Monoxide or Carbon Dioxide levels are outside the range quoted, call **Dimplex Boilers Technical Helpline on 0844 3711121. If in doubt ASK!**

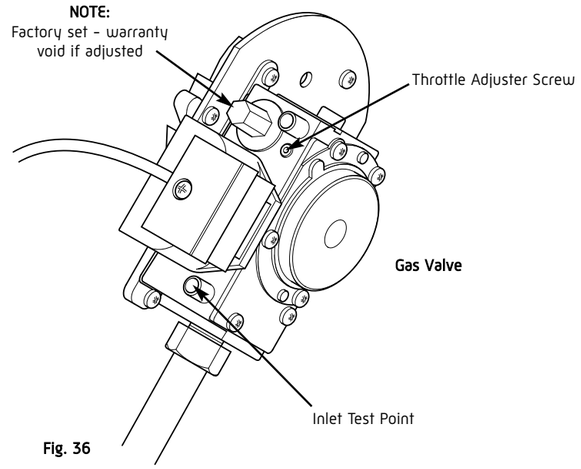

Fig. 36

Carbon Dioxide (CO2) acceptable setting level at Maximum Gas Rate after 5 minutes operation		
Boiler Model	Natural Gas %	LPG (Propane) %
18 OV	9.0	11.0
32 OV	9.1	10.9

Table 4

© Dimplex Boilers 2008

spares & parts online IBASIS.co.uk

13.0 SERVICING AND MAINTENANCE

dimplex

13.1 ROUTINE SERVICING AND ALL MAINTENANCE THAT INVOLVES THE EXCHANGE OF PART OF THE COMBUSTION CIRCUIT

1. During routine servicing, e.g. an annual service check, and after all maintenance that involves the exchange of parts of the combustion circuit, we recommend that (in this order) the integrity of the full flue system and combustion circuit seals, the inlet gas pressure, gas rate and combustion performance is verified.

NOTE: The combustion circuit on this appliance comprises of the PCB, fan, air/gas ratio valve, burner, burner door, combustion box door, injector and flue system.

2. To ensure continued safe and efficient operation of the appliance it is recommended that the boiler is serviced at least annually. Servicing must be performed by a competent person. BS 7967-1 gives guidance on identifying and managing sources of fumes, smells, spillage/leakage of combustion products and carbon monoxide detector activation.

Safety Checks
On any service visit always check;

a. Condition of flue system, both air and combustion products ducts.
b. Condition of seals and joints.
c. For evidence of leakage of combustion products.
d. For evidence of heat staining.
e. For operation at maximum heat input.
f. The general condition of the boiler and its components.

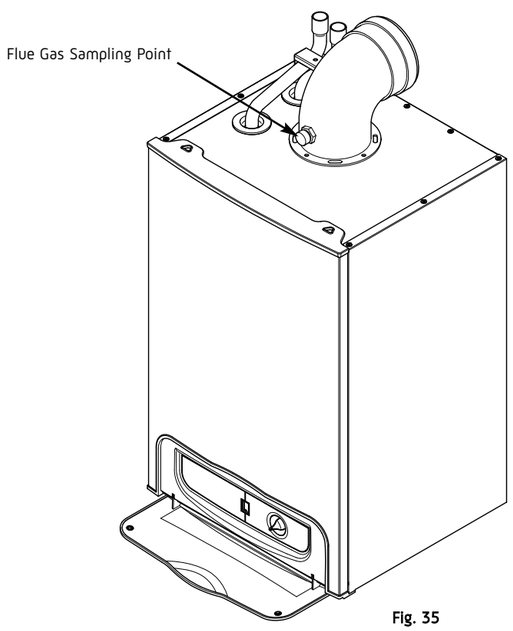

Fig. 35

13.2 COMBUSTION CHECKS

1. Combustion checks must be carried out with the outercase fitted.

2. Remove the sampling cap from the boiler flue elbow or boiler vertical flue adaptor.

3. Insert the probe from the portable electronic combustion analyser into the sampling point.

4. With the appliance operational, connect the flue gas analyser to the flue sampling point as shown in Fig. 35.

NOTE: The outercase must be fitted for all combustion checks.

5. With the boiler at minimum rate and then at maximum rate (allowing the combustion to stabilise at each rate before taking a reading) carry out the combustion checks as follows:

COMBUSTION CHECKS AT MINIMUM RATE
6. The combustion values at minimum gas rate and maximum gas rate must be checked using a suitable calibrated flue gas analyser. Further guidance is detailed in BS7967 parts 1 to 4.

7. Set the boiler into Service Mode at Min Rate (see section 11.1).

8. Check the Carbon Monoxide (CO) and Carbon Dioxide (CO_2) readings are within the range quoted in the tables opposite (Table 1).

Minimum Gas Rate				
	NG		LPG	
Boiler Model (kW)	Carbon Monoxide CO p.p.m	Carbon Dioxide CO_2 %	Carbon Monoxide CO p.p.m	Carbon Dioxide CO_2 %
18 OV	0 - 40	8.5 - 8.9	0 - 40	10.4 - 10.8
32 OV	0 - 40	8.1 - 8.5	0 - 40	10.3 - 10.7

Table 1

Maximum Gas Rate				
	NG		LPG	
Boiler Model (kW)	Carbon Monoxide CO p.p.m	Carbon Dioxide CO_2 %	Carbon Monoxide CO p.p.m	Carbon Dioxide CO_2 %
18 OV	15 - 60	8.8 - 9.2	110 - 150	10.4 - 10.8
32 OV	40 - 120	8.9 - 9.3	120 - 180	10.3 - 10.7

Table 2

© Dimplex Boilers 2008

8.0 FLUE OPTIONS

dimplex

8.10 FLUE LENGTHS

Length supplied in standard kit - horizontal		815mm
Max horizontal length (from boiler to chimney - 60/100mm)		2000mm
Min horizontal length (from boiler to chimney - 60/100mm)		100mm
Max vertical length (from boiler to chimney - 60/100mm)		2000mm
Min vertical length (from boiler to chimney - 60/100mm)		200mm
Length supplied in standard kit - vertical (available in 10m, 20m an 30m length)		N/A
Flexitube must be purchased as an accessory to complete the kit (see below)		
Flexitube min length		5m
Flexitube max length		30m
Accessories		
Description	Part No.	Equivalent Length
Horizontal - 60/100 Accessories		
Flue extension duct - 500mm	956092	450mm
Flue extension duct - 1000mm (incl. 1 x support bracket)	956093	950mm
93° extension elbow	956091	1550mm
45° extension elbow (pair)	956090	775mm
Air inlet duct - included in kit	N/A	N/A
Straight adaptor (60/80) - included in kit	N/A	N/A
91.5° adaptor elbow (80/80) - included in kit	N/A	N/A
Support bracket - 100mm	840517	N/A
93° flanged elbow - included in kit	956082	N/A
Vertical turret socket	956087	N/A
Vertical - Accessories		
Flexi tube - 10m	956110	10m
Flexi tube - 20m	956111	20m
Flexi tube - 30m	956112	30m
Straight duct (80) - included in kit	N/A	N/A
Chimney terminal - included in kit	N/A	N/A

Note: Equivalent length information only required for coaxial flue parts.
The corrugated (Flexi tube) flue parts are fixed and all parts are required for every application.

8.11 Additional Concentric Flue Kit Accessories

The following additional concentric kit accessories are available as optional extras.

Flue Extension Ducts - 1000 mm (956093) and 500 mm (956092), (each duct extends the flue length by up to 950 mm and 450 mm respectively).
93° Extension Elbow (956091) - Allows an additional bend in the flue, and has an 'equivalent length' of 1550 mm. This elbow is mechanically different from the flanged elbow supplied as standard with the appliance, but has the same equivalent length.
45° Extension Elbow (956090) - Allows an additional bend in the flue and has an 'equivalent length' of 775 mm.
Vertical Turret Socket (956087) - For use with elevated horizontal flues and vertical terminals.
Vertical Roof Terminal - For use where an external wall is not available, or where it is desirable to route the ducts vertically.

For installation details refer to the instructions provided with the individual flue kits.

These optional kits may be used with the standard flue kits to produce an extensive range of flue options, providing that the following rules are strictly obeyed.

a) The maximum/minimum permissible length of the room sealed flue system are:
Horizontal flue terminal (all orientations)
maximum 10000 mm
Horizontal flue terminal (rear exit)
minimum 250 mm

Vertical flue terminal maximum 12000 mm

Vertical flue terminal minimum 600 mm

The 'equivalent' flue length must not exceed the maximum values stated.

b) The standard terminal must be fitted horizontally; horizontal ducts must have a continuous fall towards the appliance of 1.5° to 3°. This ensures condensate runs back into the appliance from the flue system. The vertical terminal must always be used if a vertical outlet is required.

c) The concentric flue system must use either a flanged elbow or a vertical flue turret socket at the entry/exit to the appliance.

d) All joints must be correctly made and secured in accordance with the installation instructions. When cutting ducts, avoid swarf, uneven and sharp edges to maintain duct integrity.

Refer to Fig. 17 & 18 to determine which option kits are required before commencing the installation. Instructions for installing the appliance with a horizontal flue and straight extension ducts are included in the main text of these instructions (section 9.6).

© Dimplex Boilers 2008

IBASIS.co.uk

spares & parts online IBASIS.COUK®

9.0 INSTALLATION

dimplex

9.1 UNPACKING & INITIAL PREPARATION

The gas supply, gas type and pressure must be checked for suitability before connection

1. Remove the top cardboard tray from the carton.

2. Remove the pack containing the instructions, the wall mounting bracket and the fixing template.

3. To avoid scratching the boiler outercase, keep the outer carton in place.

4. After reviewing the site requirements (see Section 7.2), position the fixing template on the wall ensuring it is level and vertical.

5. Mark the position of the fixing holes for the wall plate.

6. Use the template to mark the position of the centre of the flue hole.

7. If required, mark the position of the gas and water pipes. Remove the template.

8. Cut the hole for the flue (minimum diameter 110mm).

9. Drill the wall as previously marked to accept the wall plugs supplied. Secure the wall fixing jig using the fixing screws.

10. Using a spirit level ensure that the fixing jig is level before finally tightening the screws.

11. Ensure the system has been flushed and cleaned using an appropriate cleanser.

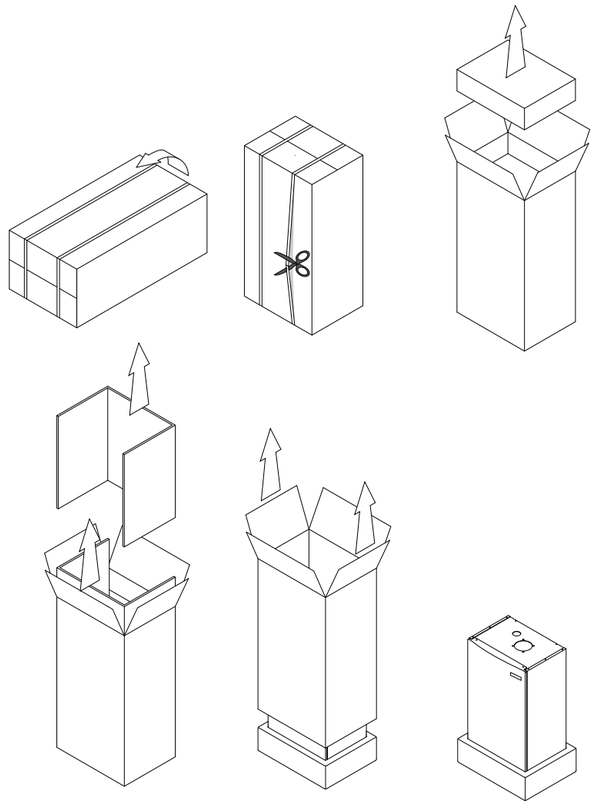

Fig. 27

© Dimplex Boilers 2008

11.0 SERVICE MODE

dimplex

11.1 TO SET THE BOILER AT MINIMUM GAS RATE

1. Turn the temperature knob fully clockwise - Note the knob will turn past the maximum temperature mark.

2. The display will start flashing showing H the boiler is now set at minimum rate.

11.2 TO SET THE BOILER AT MAXIMUM GAS RATE

1. First set the boiler to minimum gas rate (see above). The display will start flashing showing H . Rotate the knob anti-clockwise to midway position and then rotate clockwise past the temperature setting within 3 seconds. The boiler is now set at maximum gas rate.

2. To exit Service Mode, turn the temperature control knob anti-clockwise to the temperature previously set by the customer. The display will now stop flashing.

12.0 COMPLETION

12.1 COMPLETION

1. Instruct the user in the operation of the boiler and system including any timer, explaining the operational sequence.

2. Set the temperature control knob to the requirements of the user.

3. Carefully read and complete all sections of the Benchmark Commissioning Checklist at the rear of this publication that are relevant to the appliance and installation. These details will be required in the event of any warranty work. The publication must be handed to the user for safe keeping and each subsequent regular service visit recorded.

4. For IE, it is necessary to complete a "Declaration of Conformity" to indicate compliance with I>S> 813. An example of this is given in I.S. 813 "Domestic Gas Installations". This is in addition to the Benchmark Commissioning Checklist.

5. Hand over the Users Operating, Installation and Servicing Instructions giving advice on the necessity of regular servicing.

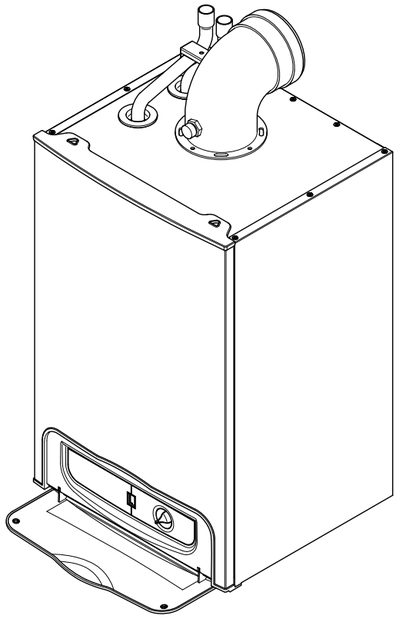

Fig. 34

© Dimplex Boilers 2008

spares & parts online IBASIS.COUK

10.0 COMMISSIONING

dimplex

10.1 COMMISSIONING THE BOILER

1. Ensure the gas service cock is turned on (see Fig. 32). The entire gas installation must be tested for gas soundness and purged in accordance with BS6891.

2. Fill the system then drain and flush and refill the system in accordance with BS7593. Ensure the boiler is completely vented.

NOTE: Failure to flush the system and to add a suitable inhibitor will invalidate the appliance warranty.

Electrical Safety Checks on the Controls, System and Boiler

4. Carry out earth continuity, resistance to earth, short circuit and polarity checks using a suitable meter.

5. Switch on the electricity supply to the boiler.

6. Turn the temperature Control knob to the midpoint between the minimum and maximum setting. The display changes from o to h indicating the boiler is in standby mode.

7. Ensure external controls are calling for heat.

8. The boiler will commence its ignition sequence and the display will display H.

NOTE: To reset the boiler, turn the temperature control fully anti-clockwise to standby position and then back to maximum position within **2** seconds.

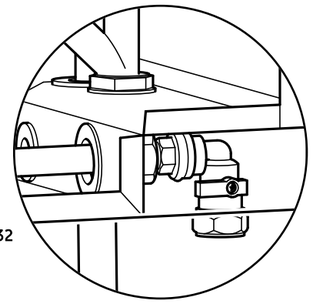

Fig. 32

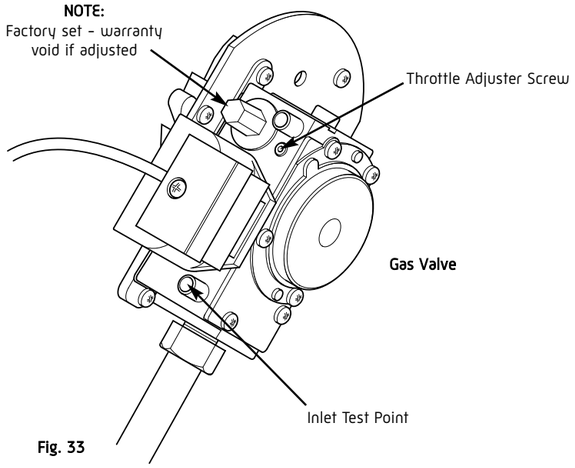

Fig. 33

10.2 FACTORY SETTINGS

NOTE: This boiler is supplied factory set for operation on natural gas. No further adjustments of the air/gas ratio valve or measurement of the combustion performance are necessary at the time of installation and commissioning. This is provided the appliance has been installed according to these instructions and the inlet gas pressure is within our specification.

10.3 INLET PRESSURE AND GAS RATE CHECKS

1. With the boiler firing at maximum gas rate, check that the inlet pressure at the appliance is 19mbar +/- 1mbar when measured at the inlet pressure test point (Fig. 33).
To set the boiler to maximum gas rate see section 11.0 (Service Mode).

2. Check the maximum and minimum gas rate at the gas meter according to the table below using a stopwatch.

Gas Rates (Natural Gas) after 5 minutes from cold				
Boiler Model	Maximum Rate		Minimum Rate	
	m^3/h	ft^3/h	m^3/h	ft^3/h
18 OV	1.95	68.8	0.57	20.1
32 OV	3.32	117.3	0.95	33.5

10.4 COMBUSTION CHECKS DURING COMMISSIONING

1. On completion of the gas inlet pressure and gas rate checks, it is necessary to check the following:
- The appliance installation conforms to these instructions.
- The installation and integrity of the full flue system including the seals in the flue pipes.
- The boiler combustion circuit, including the burner door seal, combustion door seal.

NOTE: If any doubts exist over the above checks then the combustion of the appliance can be measured as described in Section 13.2 of these instructions providing;
- The person carrying out the measurement has been assessed as competent in the use of a flue gas analyser and the interpretation of the results.
- The flue gas analyser used, meets the requirements of BS7927 or BS-EN50379-3.
- The flue gas analyser is calibrated in accordance with the manufacturers requirements.

2. The recorded combustion values should be compared with the values in Table 1 and Table 2 (see Section 13.2).

3. If the combustion value(s) is outside the values specified in Section 13.2 (Tables 1 & 2), do not attempt to adjust the air/gas ratio valve, please ring the helpline number - **0844 371 1121. If in doubt - ASK.**

© Dimplex Boilers 2008

9.0 INSTALLATION

dimplex

9.2 FITTING THE BOILER

1. Remove the sealing caps from the boiler connections.

2. Lift the boiler as indicated by the shaded areas. The boiler should be lifted by TWO PEOPLE. Engage the top of the appliance approximately 100mm above the top of the wall plate and use the side wings on the plate to locate the appliance in a horizontal direction. Then carefully lower the appliance, ensuring that the top locating rail is securely engaged. (Fig. 28) (see **Safe Manual Handling** page 6).

4. Ensure the boiler is correctly located on the wall plate and the connections align. Tighten all the connections.

9.3 CENTRAL HEATING SERVICE CONNECTION

1. The boiler is supplied with copper tails for upwards flow and return pipe routing suitable for compression or soldering connections.
On Dimplex 32 OV the connections must be made in 28mm copper pipe.

USE EXTREME CARE IF SOLDERING THE JOINTS NEAR TO THE APPLIANCE. IF BOILER IS LOCATED IN A TIGHT SPACE IT IS RECOMMENDED THAT THE PIPES ARE REMOVED FROM THE BOILER.

2. Connect the central heating system pipes to the central heating flow and return pipes on the boiler.

3. Commission the central heating system as described in section 6.

9.4 GAS CONNECTION

Connect the gas supply pipe to the gas service cock.

9.5 CONDENSATE DRAIN

1. Connect the condensate drain to the trap outlet pipe.

Ensure the discharge of condensate complies with any national or local regulations in force (see British Gas "Guidance Notes for the Installation of Domestic Gas Condensing Boilers").

2. The connection will accept 21.5 - 22mm plastic overflow pipe which should generally discharge internally into the household drainage system (see Section 7.6).

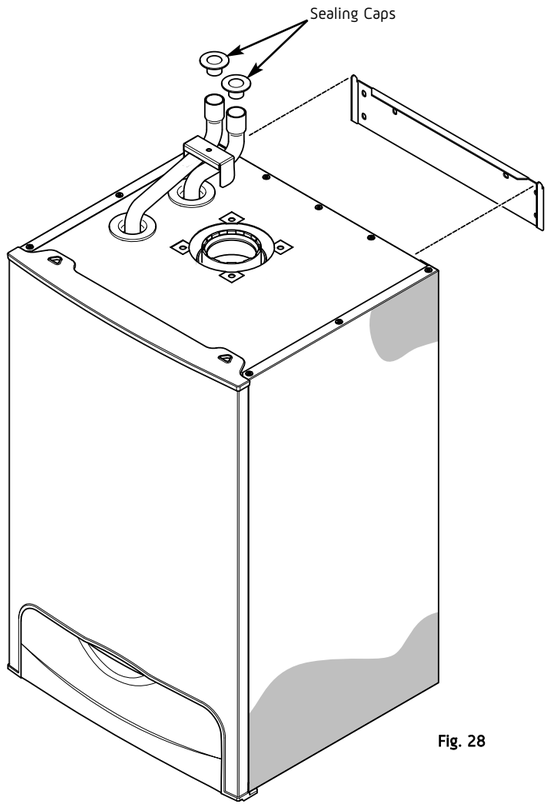

Fig. 28

© Dimplex Boilers 2008

IBASIS.COUK

spares & parts online IDAOIO spares & parts online IDAOIO spares & parts online IDAOIO

9.6 FITTING THE FLUE

HORIZONTAL TELESCOPIC FLUE

1. For correct flue installation please refer to the installation instructions that are provided with the individual flue kit as described in sections 7 & 8.

2. Measure the required flue length as shown in Fig. 34. Refer to section 8 to determine whether any extension kits are required. Installations using only the standard ducts or standard ducts with straight extensions are described in this section. Installation instructions for all other flue systems are included in the various flue kits.

3. Ensure that all (inner and outer tube) sealing rings are provided and assemble the air/flue ducts as shown in the flue instructions.

4. Ensure that the flue and air seals are correctly fitted before assembly and that each section is fully engaged.

NOTE: NEVER CUT THE SWAGED END. Where necessary the plain ends of the extension ducts may be cut. Always ensure that the cut is square and free of burrs or debris. It is essential that the terminal is fitted the correct way up. See flue kit instructions (i.e. rain shield at the top).

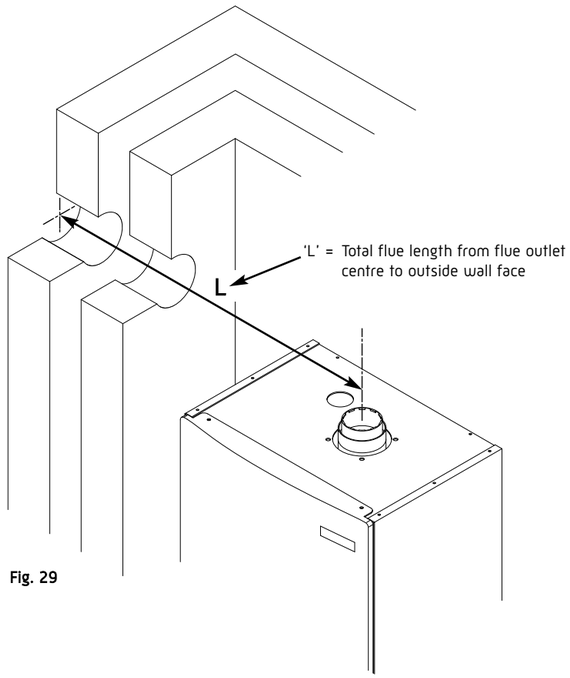

Fig. 29

INSTALLING THE AIR/FLUE DUCT FROM INSIDE THE ROOM

Detailed installation instructions are included in the flue kit. (Flue hole diameter 130mm).

1. Push the terminal through the wall taking care to ensure that the terminal is the correct way round and the external wall-sealing ring does not become dislodged.

2. Assemble the flue system extension ducts as necessary, referring to Fig. 30.

3. Pull the flue system towards the appliance to seat the external sealing ring against the outside wall, ensuring that the duct joints are not disturbed.

4. Use the internal sealing ring to make good the internal hole and check that the terminal is correctly located on the outside wall. Where possible this should be visually checked from outside the building (Fig. 30).

5. Finally locate and secure the elbow to the appliance using the four screws provided.

INSTALLING THE AIR/FLUE DUCT FROM OUTSIDE THE BUILDING

Detailed installation instructions are included in the flue kit. Flue hole diameter 110mm.

1. Secure the flue elbow with seal to the appliance using 4 screws.

2. Fit the external wall sealing ring over the flue and then from outside the building, push the flue system through the wall taking care to ensure that the terminal is the correct way around.

3. Loosely fit the internal wall sealing ring over the inside end of the flue.

4. Assemble the flue system extension ducts as necessary referring to the flue kit instructions and fit to the elbow.

5. Fit the flue terminal to the flue system, ensuring that the duct joints are not disturbed and that the external sealing ring is seated against the outside wall.

6. Finally use the internal sealing ring to make good the internal hole. Check that the external wall sealing ring and the terminal is correctly located on the outside wall.

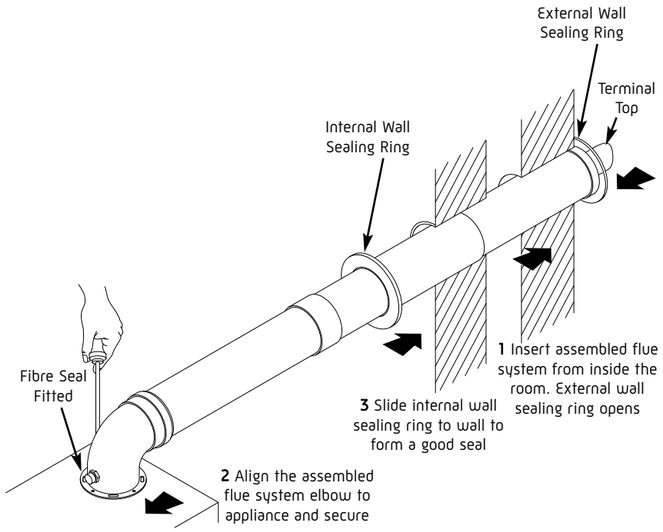

Fig. 30

© Dimplex Boilers 2008

9.7 MAKING THE ELECTRICAL CONNECTIONS

WARNING: This appliance must be earthed.

The appliance must be connected to the fused 3A 230V 50Hz supply.

To connect an external control proceed as follows:-

1. Remove the two screws on the bottom to release the front door.

2. Undo the terminal block cover securing screw and remove the cover (Fig. 31).

3. Slacken the unused cable clamp on the LH side of the boiler chassis (Fig. 31). Insert the external control wiring through the clamp and route it to the terminal block.

4. Refer to the instructions supplied with the control.

IMPORTANT: The room thermostat **MUST** be suitable for 230V switching.

5. Replace the terminal block cover, routing the external control input cable(s) through the second cut-off.

6. Replace the front door ensuring it is correctly located. Tighten the securing screws.

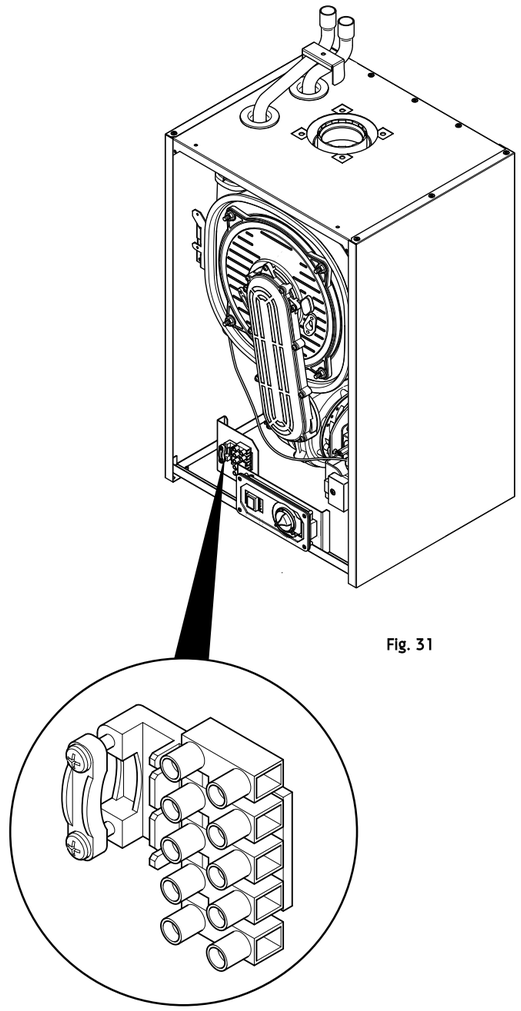

Fig. 31

9.8 PRELIMINARY ELECTRICAL CHECKS

1. Prior to commissioning the boiler preliminary electrical system checks should be carried out.

2. These should be performed using a suitable meter, and include checks for Earth Continuity, Resistance to Earth, Short Circuit and Polarity.

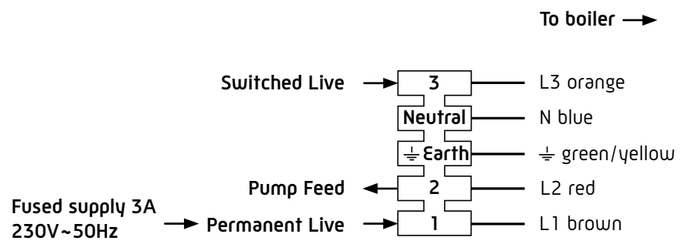

© Dimplex Boilers 2008

IBASIS.COUK IBASIS.COUK IBASIS.COUK