FERROLI

ARENA 30 A

WALL-HUNG, PRE-MIX GAS-FIRED CONDENSING BOILER

CE

INSTALLATION AND OPERATING INSTRUCTIONS

cod. 3543694/0 ediz.06/00

spares & parts online IBASIS.CO.UK

IMPORTANT

Your "benchmark" Installation, Commissioning and Service Record Log Book will be enclosed in your customer information pack.
"This record must be completed and left with the end user".

Ferroli is a member of the Benchmark initiative and fully supports the aims of the programme. Benchmark has been introduced to improve the standards of installation and commissioning of central heating systems in the UK and to encourage the regular servicing of all central heating systems to ensure safety and efficiency.
Please see installation and servicing guidlines.

CE MARK
CE mark documents that the Ferroli gas appliances comply with the requirement contained in European directives applicable to them.
In particular, the appliances comply with the following CEE directives and the technical specifications provided from them:
- Gas appliances directive 90/396
- Efficiencies directive 92/42
- Low tension directive 73/23 (modified from the 93/68)
- Electromagnetic compatibility directive 89/396 (modified from the 93/68)

Year 2000 Compliance Declaration
We will guarantee that this products is altogether suitable for the data change in the Year 2000 (boiler has no dependence from date change) and that no disruptions will occur which is caused by this product.

- Read the warnings given in this manual thoroughly. They provide important information for safe installation, use and maintenance
- Keep the manual carefully for future consultation.
- The instruction manual is an integral and essential part of the product and must be kept by the user.
- If the appliance is sold or transferred to another owner or if the owner moves, leaving the appliance behind, always ensure that the manual is kept with the appliance for consultation by the new owner and /or installer.
- Incorrect installation or poor maintenance absolves the manufacturer from all liability for damage to people or things.
- Installation and maintenance must be carried out i conformity with current legislation, according to the manufacturer's instructions and by qualified personnel.
- Before cleaning or maintenance, disconnect the appliance from the mains via the switch on the appliance or a suitable isolating device.
- In the event of malfunction or faulty operation, deactivate the appliance. Do not attempt to repair or carry out any other operation on the appliance directly. Contact qualified personnel only.
- Repairs or the replacement of components must be carried out exclusively by qualified personnel using original spare parts only. Failure to respect the above my compromise the safety of the appliance.
- To guarantee efficient operation, the appliance must be serviced once a year by an authorised service centre.
- The appliance may not be used for purposes other than those for which it was explicitly designed. Any other use is considered improper and therefore dangerous.
- Incorrect installation and use or failure to follow the instructions provided by the manufacturer absolve the manufacturer from all liability for damage.
- After unpacking, check that the contents are whole and undamaged.
- Keep packing out of reach of children as it is potentially hazardous.
- To clean external parts, use a damp cloth moistened with soapy water if necessary. Avoid using abrasive cleaning products and solvents.

INDEX

1. CHARACTERISTICS AND TECHNICAL DATA 4
1.1 Introduction 5
1.2 Structural charateristics 6
1.3 Technical data table 9
1.4 Diagrams 10
1.5 Functional flow chart 11

2. INSTALLATION 12
2.1 General Instructions 12
2.2 Positioning and wall mounting 12
2.3 Connection to the hydraulic system 13
2.4 Characteristics of the boiler water 14
2.5 Connection to the gas system 15
2.6 DHW storage connection 15
2.7 Condensation discharge connection 15
2.8 Electrical connections 15
2.9 Positioning the external probe 17
2.10 Flues 18
2.11 Connection to concentric pipes 18
2.12 Connection to separate pipes 20
2.13 Table of losses for piping and accessories 21
2.14 Terminal Position 24

3. SERVICE AND MAINTENANCE 25
3.1 Settings 25
3.2 Commissioning and testing 28
3.3 Maintenance 29
3.4 Replacement of parts 33
3.5 Troubleshooting 36

4. OPERATING INSTRUCTIONS 39
4.1 Operation and controls 39
4.2 Boiler control panel 39
4.3 Ignition 40
4.4 Shut-down 40
4.5 Operating indications on the display 40
4.6 Accessing the operating menu 40
4.7 Setting the heating system temperature 41
4.8 Setting the domestic hot water temperature 41
4.9 DHW storage exclusion 41
4.10 Outside temperature compensation 41
4.11 Maintenance 42
4.12 Anomalies 42

1. CHARACTERISTICS AND TECHNICAL DATA

1.1 Introduction

Dear Customer,

Thank you for having chosen the **Arena 30 A**, the latest generation FERROLI wall-hung boiler, featuring advanced design and cutting-edge technology.

The **Arena 30 A** is a pre-mix condensing thermal generator for heating and the production of domestic hot water, with very high thermal efficiency and very low emissions, fired by natural gas or LPG.

The **boiler body** is made up of a prismatic mono-block heat exchanger, with a hexagonal base made from aluminium alloy, inserted in a cylindrical steel jacket, with water cavity, and insulated externally with high-density foam. The special design of the heat exchanger allows effective condensation of the water vapour contained in the flue gases, making the Arena highly efficient. The heat exchanger has been designed to maintain its characteristics of high thermal exchange over time.

Inside the aluminium mono-block heat exchanger, in a cooled combustion chamber, lies the pre-mix burner assembly, with a radial shape and metallic surfaces, featuring electronic ignition with ionisation flame control, which allows extremely low emission values, and at the same time guarantees high reliability and constant operation over time.

The combustion circuit and the air intake are sealed from the installation environment.

The boiler is fitted with a variable speed fan and built-in modulating gas valve, connected directly to the outside.

The boiler is preset for connection with external DHW storage. An internal circulator for DHW, connection dedicated to DHW storage, DHW probe make the connection extremely simple.

The boiler control and regulation system is microprocessor-based, with advanced self-diagnostics. The user interface, made up of a keypad and display, is user-friendly, and shows the operating status of the appliance at all times. The operating parameters and the data logs are saved internally and can be called up using the Personal Computer interface to simplify Service operations.

The heat output is regulated continuously across the entire operating range (also with DHW storage), with temperature-scrolling climate control, which automatically adapts the operating mode to the characteristics of the internal and external environments, of the building and its location.

Completing the fitted devices are a variable-speed heating pump and a fixed-speed domestic hot water pump, a high-capacity expansion vessel, flowmeter, safety valve, drain cock, water pressure switch, flue gas sensor, temperature sensors and safety thermostat.

1.2 Structural charateristics

Dimensions and connections

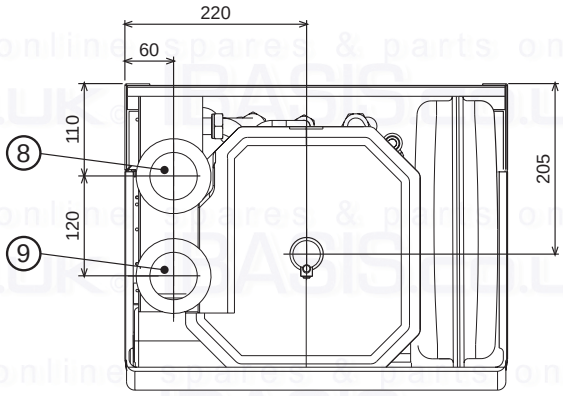

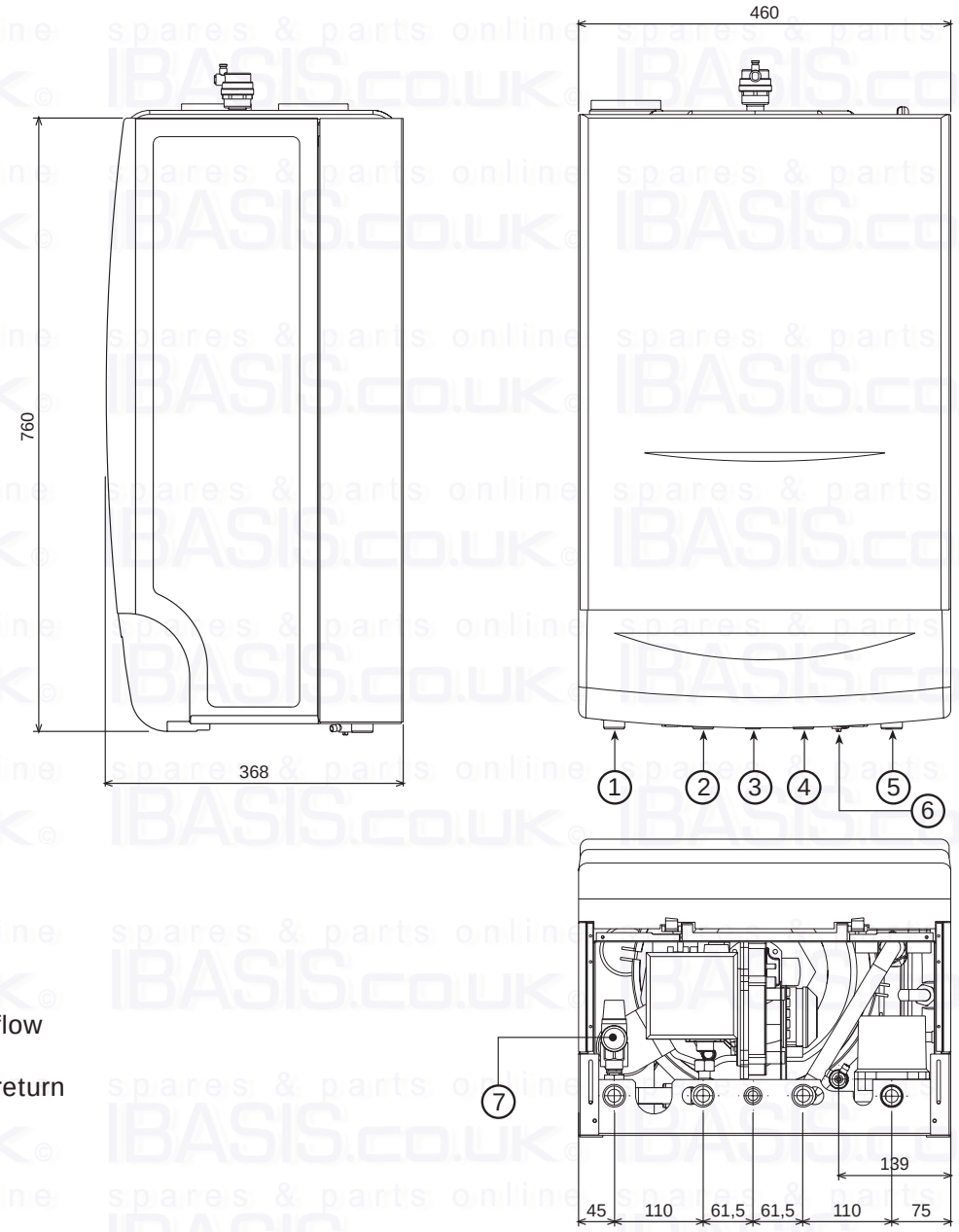

Key

1 Heating outlet
2 DHW storage flow
3 Gas inlet
4 DHW storage return
5 Heating return
6 Drain cock
7 Safety valve
8 Flue gas outlet
9 Air inlet

Fig. 1

Overall view and main components

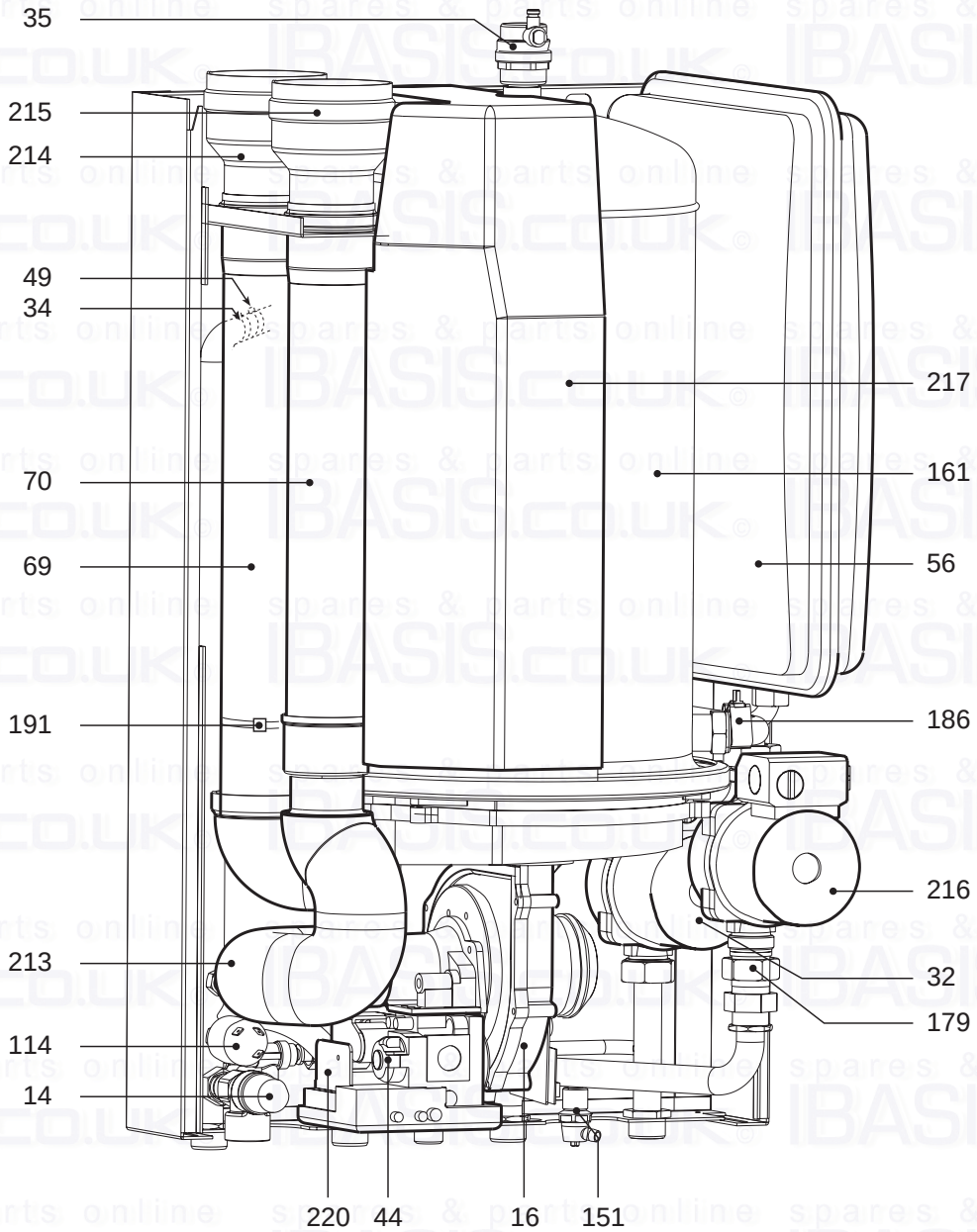

Fig. 2

Key

14 Safety valve
16 Fan
32 Heating pump
34 Heating temperature sensor
35 Auto air vent
44 Gas valve
49 Safety thermostat
56 Expansion vessel
69 Flue gas outlet pipe
70 Air intake pipe
114 Water pressure switch
151 System drain cock
161 Condensing heat exchanger
179 Non-return valve
186 Return sensor
191 Flue gas temperature sensor
213 Flexible inlet air pipe coupling
214 Flue gas outlet reducer
215 Air inlet reducer
216 Domestic hot water pump
217 Boiler body lagging
220 Ignition board

Hydraulic diagram

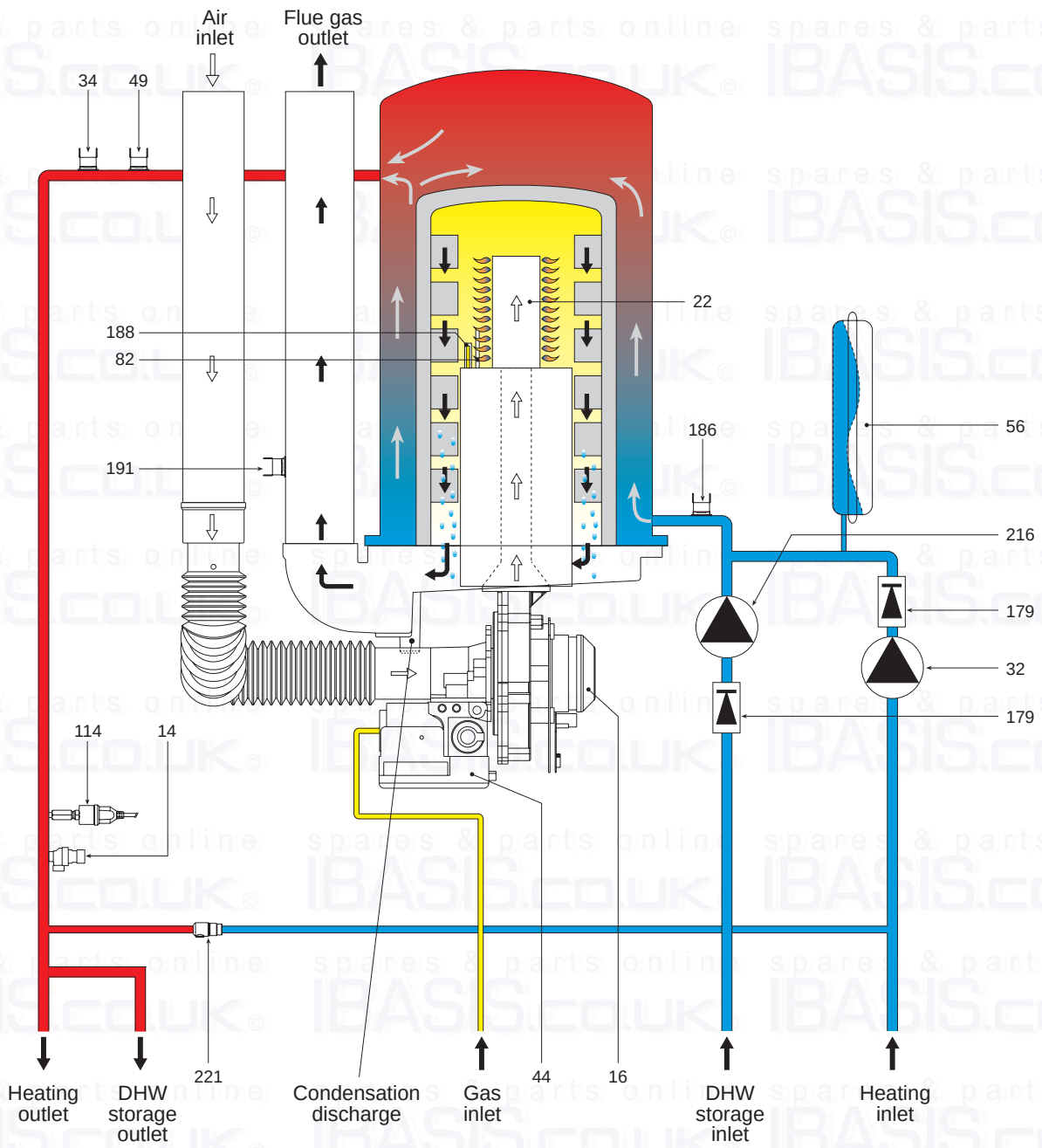

Fig. 3

Key

14 Safety valve
16 Fan
22 Main burner assembly
32 Heating pump
34 Heating temperature sensor
44 Gas valve
49 Safety thermostat
56 Expansion vessel
82 Detection electrode
114 Water pressure switch
179 Non-return valve
186 Return sensor
188 Ignition electrode
191 Flue gas temperature sensor
216 Domestic hot water pump
221 Bypass cock

1.3 Technical data table

Power		Pmax	Pmin
Heat rate Hi	kW	30,6	7,6
	kcal/h	26.316	6.536
Heat rate Hs	kW	34	8,44
	kcal/h	29.240	7.262
Useful heat output 80°C - 60°C	kW	30,0	7,5
	kcal/h	25.800	6.450
Useful heat output 50°C - 30°C	kW	32,4	8,2
	kcal/h	27.864	7.052
Natural Gas rate (G20)	nm^3/h	3,24	0,80
Natural gas supply pressure (G20)	mbar	20	20
LPG Gas rate (G31)	kg/h	2,38	0,59
LPG Gas supply pressure (G31)	mbar	37	37
Combustion		**Pmax**	**Pmin**
CO2 (Natural Gas - G20)	%	9,5	9,0
CO2 (LPG - G31)	%	10,2	9,5
Flue gas temperature 80°C-60°C	°C	70	65
Flue gas temperature 50°C-30°C	°C	40	32
Flue gas flow rate	kg/h	49	13
Quantity of condensation	kg/h	3,3	1,4
pH of condensation water	pH	4,1	
Heating			
Maximum operating temperature, heating	°C	85	
Maximum operating pressure, heating	bar	3	
Minimum operating pressure, heating	bar	0,8	
Expansion vessel capacity	litri	12	
Expansion vessel pre-fill pressure	bar	1	
Boiler total water content	litri	11,8	
Dimensions, weights, conections			
Height	mm	760	
Width	mm	460	
Depth	mm	368	
Empty weight	kg	55	
Gas system connections	poll.	1/2”	
Heating system connections	poll.	3/4”	
Domestic hot water storage connections	poll.	3/4”	
Condensation discharge (flexible pipe)	mm	15x20	
Maximum length separate flues D=80* (*Values expressed in equivalent air metres - refer to FERROLI calculation system)	m_{eq}	100	
Electrical power supply			
Max Electrical Power Consumption	W	150	
Pump electrical power consumption (Speed I-II-III)	W	48-67-93	
Power supply voltage/frequency	V/Hz	230/50	

1.4 Diagrams

Heating pump head

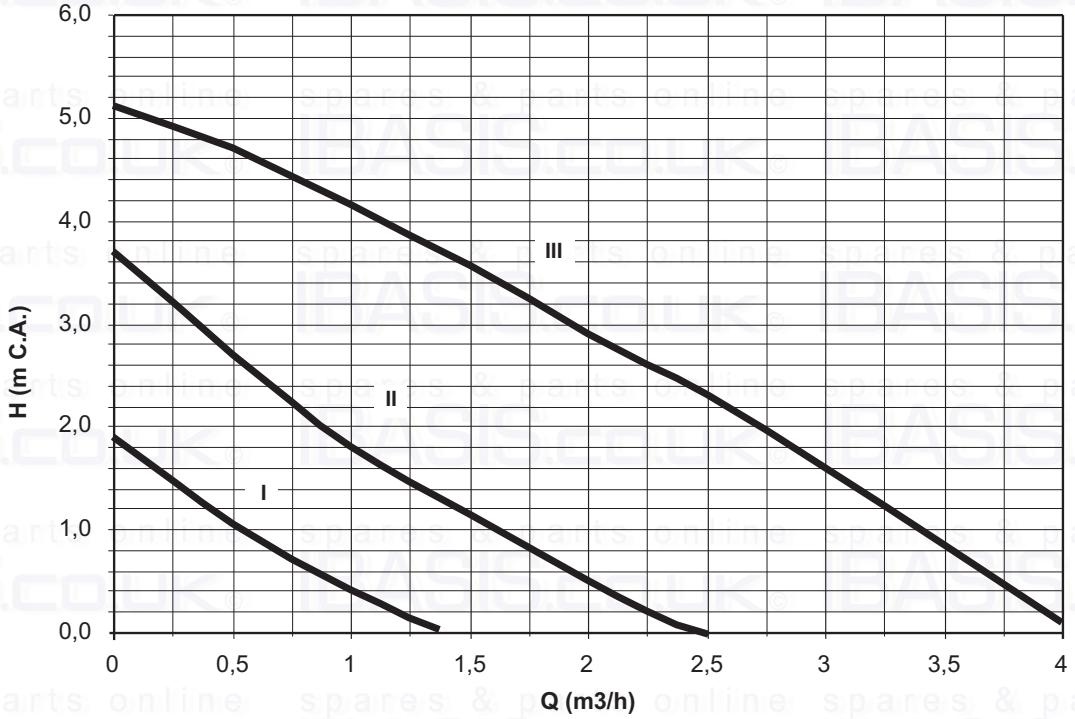

Fig. 4

Loss of boiler pressure

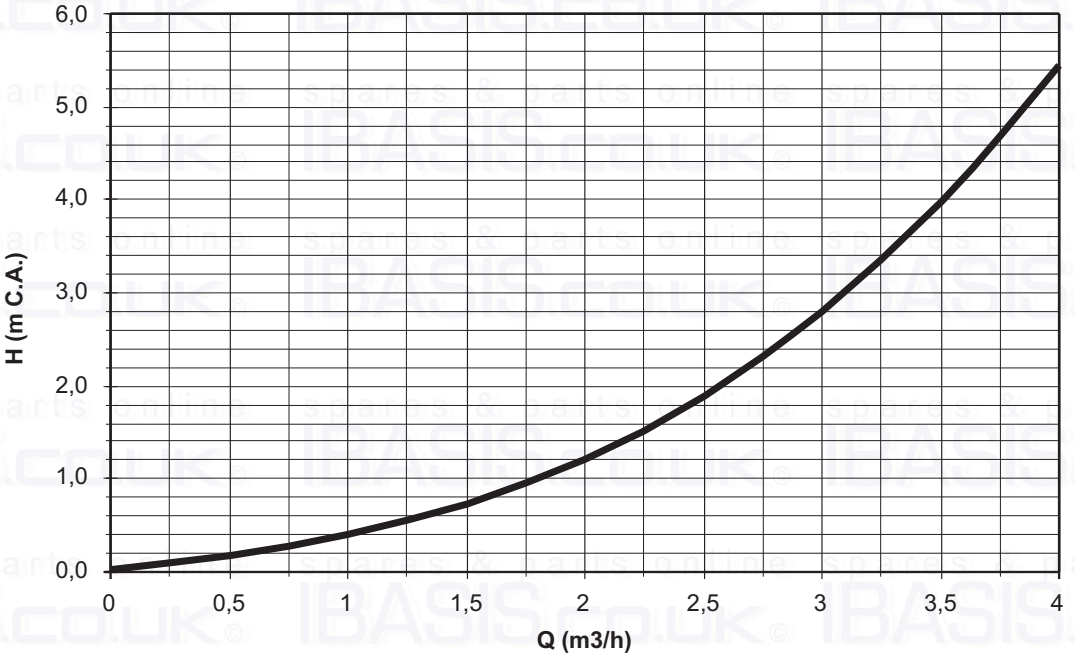

Fig. 5

1.5 Functional flow chart

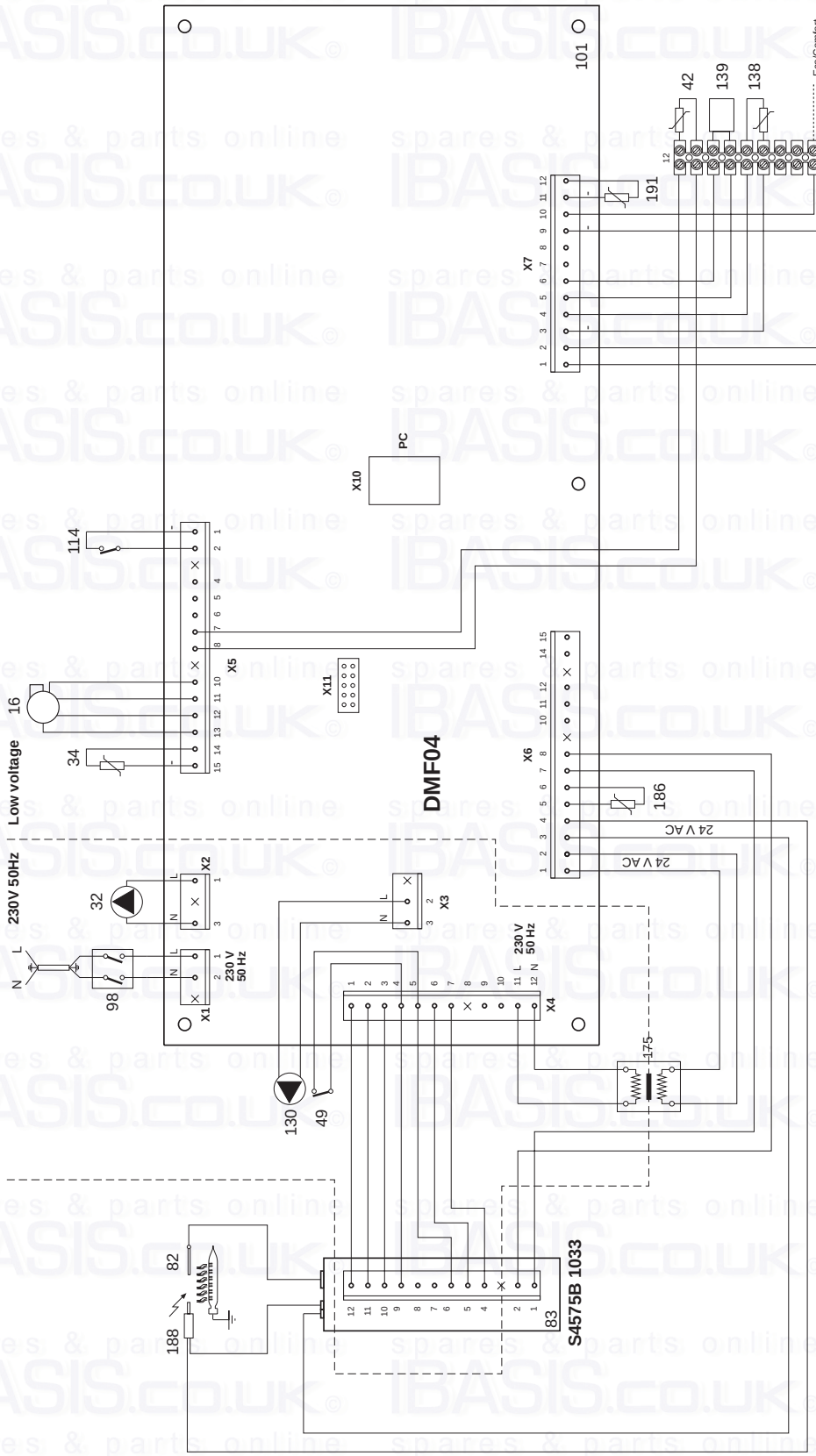

Legenda

16 Fan
32 Central heating pump
34 C. H. flow temperature sensor
42 D. H. W. temperature sensor
49 Overheat cut-off thermostat
72 Room thermostat (not fitted)
82 Ionisation electrode
83 Full sequence automatic control
98 Switch
101 Main P.C.B.
114 Water pressure switch
130 D.H.W. pump
138 Outside temperature sensor
139 Room unit (not fitted)
175 Transformer
186 Return temperature sensor
188 Hot surface igniter
191 Exhaust temperature sensor

Fig. 6

2. INSTALLATION

2.1 General Instructions

Gas Safety (Installation & Use) Regulations: 1996

In the interest of safety, **it is the law** that all gas appliances are installed by a competent person in accordance with the above Regulations, Building Regulations/Building Standards Scotland, Codes of Practice, current I.E.E. Regulations and the byelaws of the Local Water Undertaking. Failure to comply with the Regulations may lead to prosecution; it is your responsibility to ensure that the law is complied with.

N.B. For Northern Ireland the rules in force apply.

IMPORTANT If the boiler is to be fitted in a timber framed building it should be fitted in accordance with the Institute of Gas Engineers document IGE/UP/7. If in doubt advice should be sought from the Local Supplier.

WARNING!! This appliance must be installed in a room with sufficient ventilation, to avoid dangerous conditions arising in the event of, even minor, gas leaks. These safety standards are imposed by the EEC Directive no. 09/396 for all gas appliances, including the so-called sealed appliances.

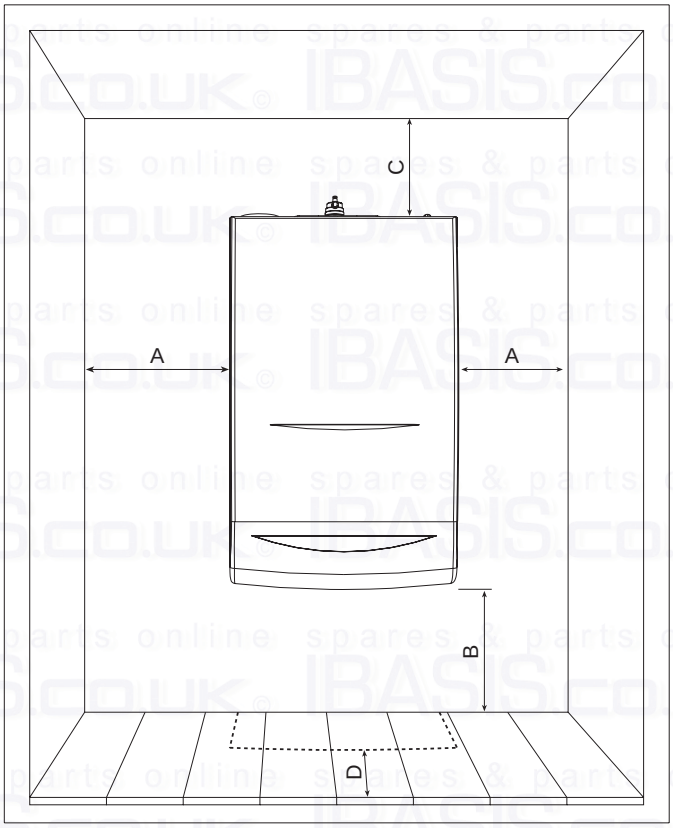

Fig. 7

2.2 Positioning and wall mounting

The installation of the **ARENA** must be on a suitable non-combustible load bearing wall which will provide an adequate fixing for the boiler mounting bracket assembly. The location should be in an area where the water pipes will not be subjected to frost conditions. In siting the combination boiler the following limitations **must** be observed:

	Minimum	Recommended
A	3 cm	15 cm
B	15 cm (20 cm from DHW storage)	30 cm
C	10 cm	15 cm
D	1,5 cm (from any openable panel)	> 50 cm

The combination boiler may be installed in any room or internal space, although particular attention is drawn to the requirements of the current I.E.E. wiring regulations and in Scotland the electrical provisions of the building regulations applicable in Scotland, with respect to the installation of the combination boiler in a room or internal space containing a bath or shower.

Where a room sealed appliance is installed in a room containing a bath or shower any electrical switch or appliance control utilising mains electricity must be situated so that it cannot be touched by a person using the bath or shower.

The boiler is supplied ready for wall-hung installation. The rear frame of the appliance has a series of slots

for fastening it to the wall, using screws with metal wall plugs. The fastening to the wall must provide stable and effective support of the appliance.

The boiler must be fastened to a closed part of wall, which is free of apertures or holes behind the frame of the boiler that may allow the internal components of the boiler to be reached.

If the appliance is enclosed in a cabinet or alongside another appliance, space must be allowed for normal maintenance operations. Fig. 7 shows the minimum and recommended space to be left free around the appliance.

The boiler is supplied with a paper drilling template used to trace the holes for fastening the appliance onto the wall. Furthermore, upon request a metal version of the wall drilling template is available, which can be reused for more than one appliance.

Position the drilling template on the part of the wall chosen for the installation of the boiler; using a spirit level, check that the lower bracket is perfectly horizontal. Temporarily fasten the drilling template to the wall using some adesive tape. Trace the fastening points **"A"**, then using screws and wall plugs, hang the boiler. The connection for the water and gas pipes to the boiler are then defined, from **"B"** lines (for vertical connections) or from **"C"** holes for horizontal connections (using optional Ferroli kit).

Note If there is no drilling template for mounting the appliance, simply fasten the boiler to the wall using suitable support screws with metal wall plugs, through the holes in the boiler frame.

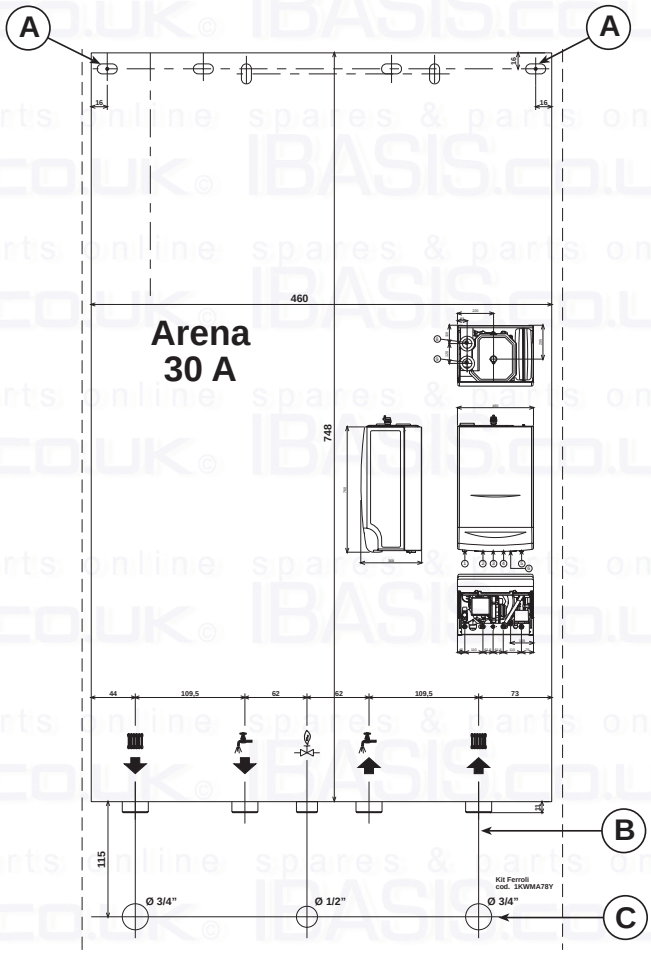

2.3 Connection to the hydraulic system

Make the connections to the corresponding couplings, according to the positions indicated in Fig. 3.

Key

1 Heating outlet
2 DHW storage flow
3 Gas inlet
4 DHW storage return
5 Heating return
6 Drain cock

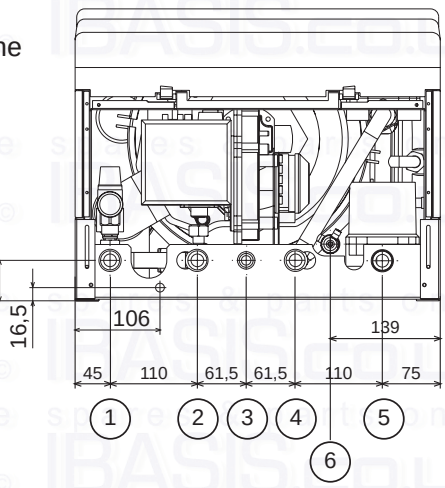

Fig. 8

In addition, shut-off valves should be installed between the boiler and the heating system to allow, if necessary, the boiler to be isolated from the system. If a non-return valve is also installed in the domestic hot water circuit, a safety valve must be fitted between the boiler and this circuit.

The discharge of the safety valve must be connected to a funnel or collection pipe, to avoid water leaking onto the ground in the event of excessive pressure in the heating circuit.

Make the connections to the boiler so as its internal pipes are not subject to stress. For proper operation and long-life of the boiler, the hydraulic system must be correctly proportioned and always complete with all the accessories required to guarantee regular operation and conduction.

Upon request a connection kit can be supplied, simplifying connection to the system.

2.4 Characteristics of the boiler water

In the presence of water with hardness above 18 Clarke degrees, the water should be suitably treated, to avoid any deposits in the boiler caused by hard water, or corrosion caused by aggressive water. It should also be remembered that even minor deposits measuring just a few millimetres thick can cause, due to their low thermal conductivity, significant overheating of the walls of the boiler, with consequent and serious problems.

The water must always be treated in the case of very large systems (with high water capacity) or systems with the frequent inlet of recovered water. If, in these cases, the system needs to be partially or completely emptied, it must be refilled with treated water.

Water System

Note The boiler is designed for sealed systems only and must NOT be used on open vented systems.

Central Heating

Detailed recommendations are given in BS6798, BS5449, BS6700 and CP342 Part 2. Pipework not forming part of the useful heating surface should be insulated to prevent any heat losses or possible freezing (i.e. in roof spaces or ventilated underfloor spaces). Drain taps should be positioned at the lowest point of the system in accessible locations to permit the whole system to be drained down. The drain taps should be in accordance with BS2879. Copper tubing to BS2871, Part 1 is recommended for water carrying pipework. Pipework in horizontal runs should have a gradient where possible to facilitate the removal of air. Ensure that the boiler heat exchanger is not a natural point for air collection.

Make Up Water

Provision must be made for replacing water lost from the sealed system. Reference should be made to BS6798, for methods of filling and making up sealed systems. There must be no direct connection between the boiler's central heating system and the mains water supply. The use of mains water to charge and pressurise the system directly, is conditional upon the Local Water Byelaws. Again any such connection must be disconnected after use.

Domestic Hot Water

Always fit a scale reducer in "hard water areas" (18 clarke degrees or over)". A 15mm copper connection point on the boiler for attaching to the main supply is provided. The maximum domestic water pressure for the inlet supply is 10 bar (145 P.S.I.). **If the cold mains supply exceeds 5 bar (72 P.S.I.), a water governor or pressure reducing valve must be fitted** by the installer into the mains supply in an inconspicuous but accessible position preferable between 3 and 5 metres (10-16ft) before the appliance. Such a valve must be approved by the Water Research Council.

Attention - is drawn to the Model Water Byelaws.

Fittings manufactured from duplex (alpha-beta) brass are not acceptable for underground use and certain water undertakings will not accept their use above ground.

Ensure all pipework is adequately supported.

2.5 Connection to the gas system

If necessary the local Gas supplier should be consulted, at the installation planning stage, in order to establish the availability of an adequate supply of gas.

An existing service pipe must **not** be used without prior consultation with the Local Gas supplier.

A gas meter can only be connected by the Local Gas supplier, or by a Local Gas suppliers Contractor.

Installation pipes should be fitted in accordance with BS6891-1988.

Appliance inlet working pressure must be 20mbar MINIMUM, for NG and 37 mbar minimum for LPG.

Pipework from the meter to the combination boiler must be of an adequate size.

The boiler requires 2.73m^3/h of natural gas, and 2,00 kg/h of LPG.

Do not use pipes of a smaller size than the combination boiler inlet gas connection.

The complete installation must be tested for gas soundness and purged as described in BS6981-1988. All pipework must be adequately supported. An isolating gas valve is provided and should be fitted on the boiler gas inlet. Please wait 10 minutes when lighting from cold before checking gas rate. Gas pressures should be checked after the boiler has operated for 10 minutes to reach thermal equilibrium.

2.6 DHW storage connection

Connect the DHW storage directly to the boiler, following the positions indicated in fig. 8. If the DHW storage is collocated on the floor, under the boiler, it is necessary to leave the suggested space for the extraction of the burner unit between DHW storage and boiler, as shown in the fig. 7. Be careful that connection pipes to the DHW storage do not interfere or limit the possibility to extract the burner unit (also see sequence of figures 24a - 24h). It is suggested to leave at least 30 mm.

2.7 Condensation discharge connection

The flexible grey condensation discharge pipe, located under the boiler on the left, must be connected to a drain trap, making sure that the end of the pipe remains immersed in the water of the trap (see Fig. 9).

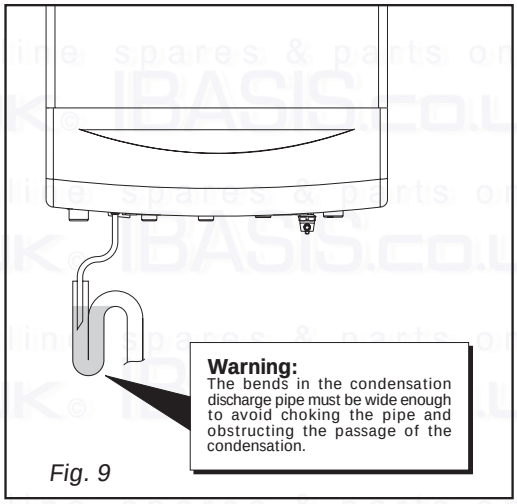

Fig. 9

2.8 Electrical connections

Power supply

The boiler must be connected to a single-phase, 230 Volt-50 Hz power line, with max 3A fuses fitted between boiler and the line, as well as a bipolar switch (ON/OFF) with contacts whose opening is at least 3 mm. The boiler must always be properly earthed.

When electrically connecting the boiler to an electrical system with live and neutral, THE POLARITY MUST BE RESPECTED (LIVE: brown wire / NEUTRAL: blue wire / EARTH: yellow-green). Note: If replacing the electrical power cable, use only the “HAR H05 VV-F” cable, 3x0.75 mm2, with a maximum external diameter of 8 mm.

Room thermostat, external unit and auxiliary controls

Below the electrical control box is a multipolar terminal block, for connecting:

- Room thermostat (1-2)
  WARNING: THE ROOM THERMOSTAT MUST NOT HAVE LIVE CONTACTS. CONNECTING 230V TO THE ROOM THERMOSTAT TERMINALS WILL CAUSE IRREVERSIBLE DAMAGE TO THE ELECTRONIC BOARD.
  When connecting a room thermostat with daily or weekly program, or a timer, avoid taking the power supply to these devices from their switch contacts. Their power supply must derive from a direct connection to the mains or using batteries, depending on the type of device.
  This appliance can also operate without a room thermostat, yet the latter is recommended for increased comfort and greater energy savings.
- Switch for economy/comfort remote selection (3-4). With the switch turned off the boiler is maintained in "Comfort", independently from the setting on the menu or on the remote control.
- External temperature probe (7-8)
  With the probe (optional) connected, the boiler works in outside compensation temperature mode, depending on the compensation curve settled (ref. 4.10). If none probe is connected, the boiler works in standard mode and setting of a compensation curve (parameter 9 of menu) is ignored by the control system.
- Remote control (9-10), for remote control and regulation of the boiler, with weekly chronothermostat and climatic regulation functions.
- DHW storage probe (11-12), for the DHW storage temperature regulation. The probe has to be positioned in the DHW storage sump.

To make these connections, unscrew the four screws which fasten the lower protective plate and connect the wires to the terminal block, respecting the position of the terminals (refer to the wiring diagrams, chap. 1.5).

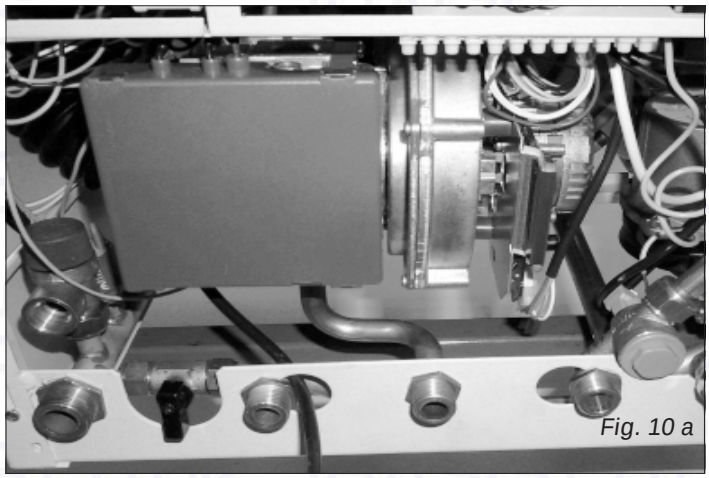

Fig. 10 a

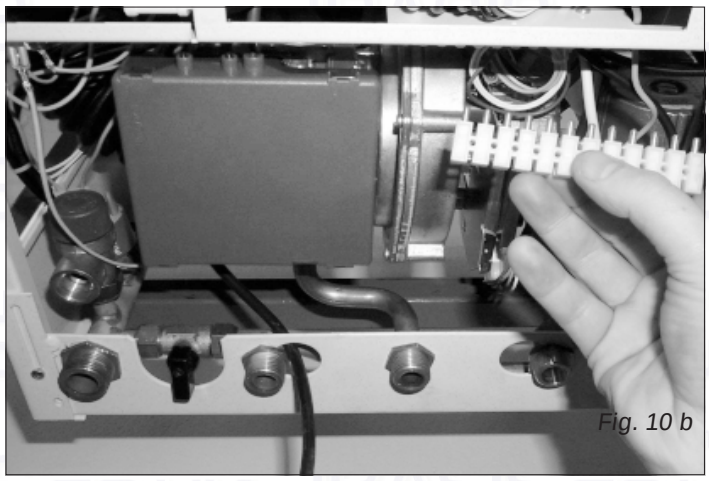

Fig. 10 b

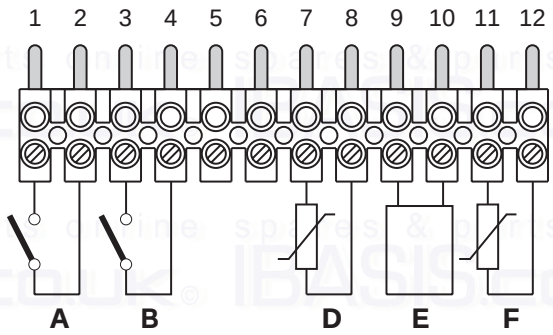

A Room thermostat
B Eco/Comfort selection switch
D External temperature sensor
E Remote control
F DHW storage sensor

Fig. 10 c

2.9 Positioning the external probe

The external probe is best installed on a wall facing north, north-west or which borders the majority of the main living area. The probe must never be exposed to the early morning sun, and, in general and where possible, must not receive direct sunlight; if necessary, it should be shielded.

The probe must not in any case be fitted near windows, doors, ventilation openings, flues, or sources of heat which may alter the reading.

Note: The maximum length allowed for the electrical cable connecting the boiler to the external probe is 50 m. A common two-lead cable can also be used.

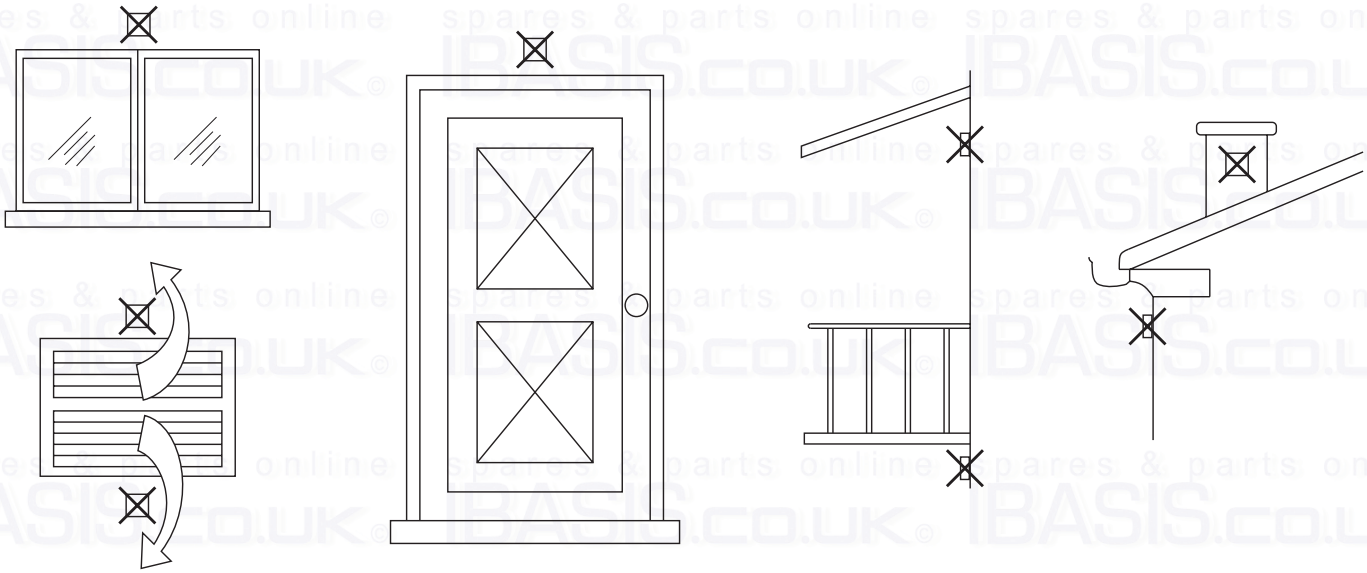

Fig. 11

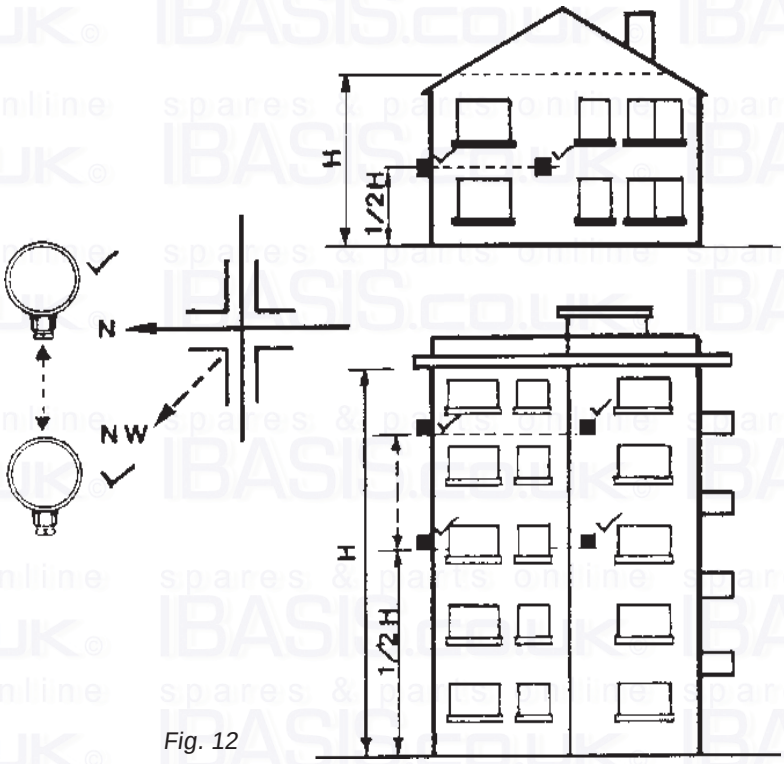

Fig. 12

2.10 Flues

Arena is a type-C boiler with forced draught, the air inlet and the flue gas outlet must be connected to one of the exhaust–intake systems indicated as follows. Using the tables and the methods of calculation described, first verify, before installation, that the flues do not exceed the maximum allowed length.

2.11 Connection to concentric pipes

An aluminium "60/100 concentric adapter" is available for connecting the boiler to 60/100 mm concentric pipes. The extreme ease of mounting and the use of double-lip gaskets in the couplings makes this solution extremely advantageous and safe. Furthermore, an aluminium and plastic concentric kit is available for discharge using 80/125 concentric pipes.
The total length in linear metres of the concentric pipes must not exceed the maximum length indicated in the first table below. The second table shows the reductions to be used for any bends in the pipes, excluding the initial one.

	Maximum allowable pipe length			
	Ø100/60 mm concentric		Ø125/80 mm concentric	
	Vertical	Horizontal*	Vertical	Horizontal*
Arena 30 A	12 m	11 m	21 m	20 m

Reducers for concentric bends	
90° concentric bend	1 m
45° concentric bend	0,5 m

For installation, connect the concentric kit directly to two diameter 80 bell-shaped reducers in the boilers, as indicated in Fig. 13. The concentric kit can then be connected directly to a concentric bend using a horizontal pipe or a concentric pipe in the vertical position.

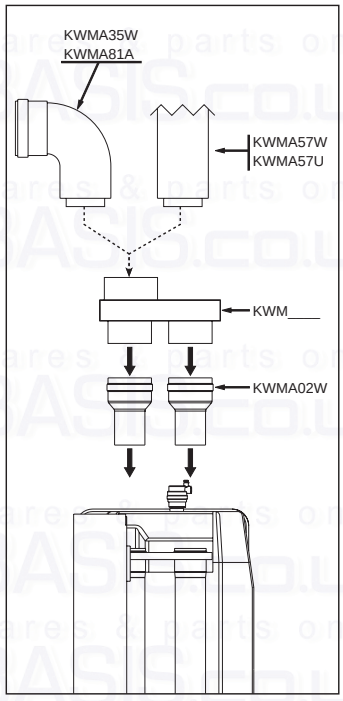

Fig. 13

To locate the centre of the hole for the passage of the pipes in the wall, refer to Fig. 14:

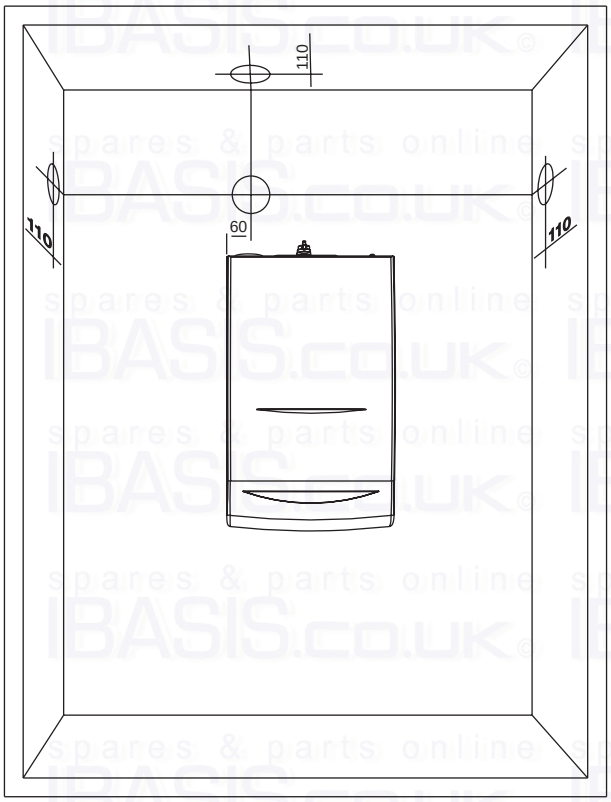

Fig. 14

Please consider that the horizontal concentric piping must have a slope towards the boiler of at least 3 mm/m, to allow the condensation which forms in the flues to flow back to the boiler, and avoid external dripping. The concentric pipes should be sealed with the relative pipe coupling seal at the points of coupling to the wall. The external piping must protrude from the wall between 10 and 60 mm (Fig.15).

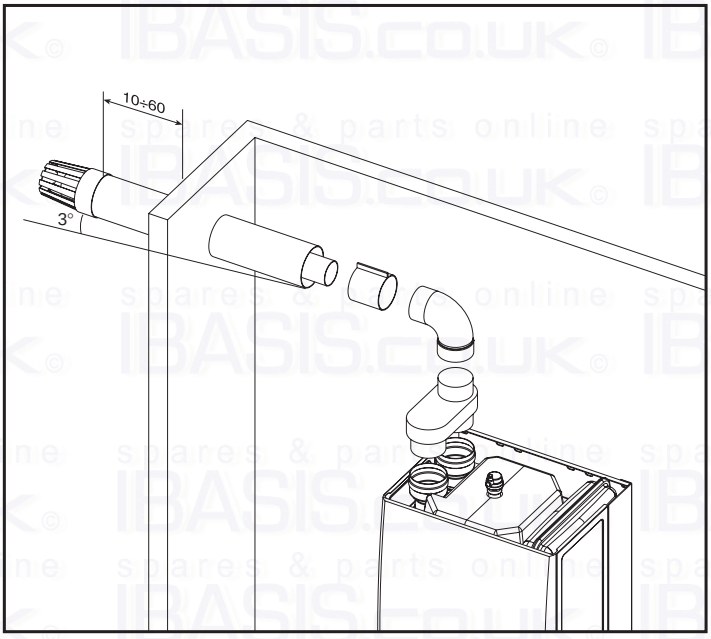

Fig. 15

2.12 Connection to separate pipes

The separate Ø60 pipes for air intake and flue gas exhaust can be connected directly to the boiler, as shown in Fig. 16a. Separate Ø80 pipes can be connected directly, once the two 80/60 (optional) reducers have been fitted inside the boiler (Fig. 16b).

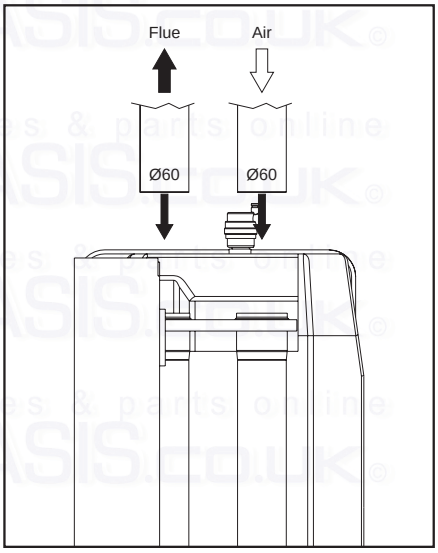

Fig. 16 a

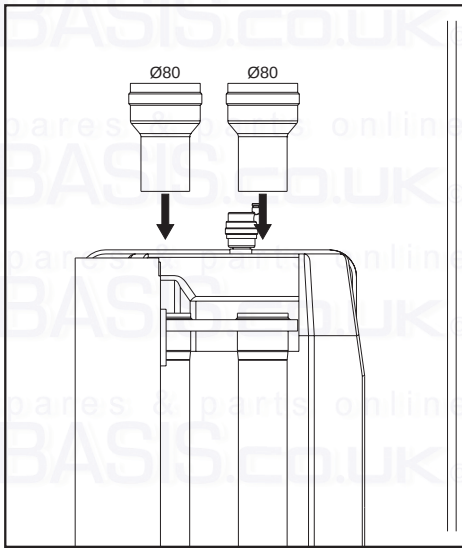

Fig. 16 b

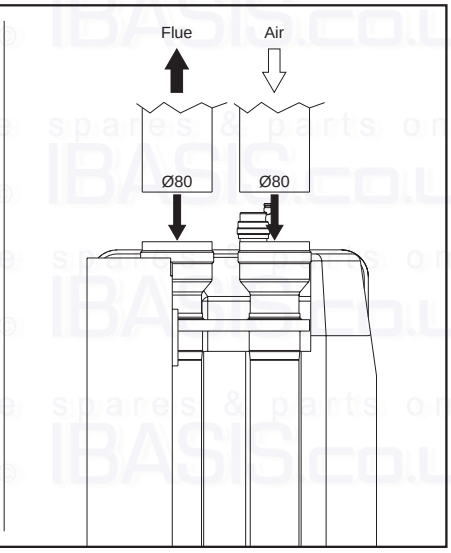

Fig. 16 c

Upon request, a wide range of pipes, bends and accessories can be supplied. For the various components, refer to tables 1-2-3 or to the flue accessory catalogue.

A simple calculation can be performed to ensure that the maximum allowable pipe length is not exceeded:

1 For each component, table 1-2-3 lists the loss of pressure in “equivalent air-metres”, depending on the position of installation of the component itself (air intake or flue gas exhaust, vertical or horizontal).

The loss is called “equivalent air-metres” as it relates to the loss of a metre of air intake pipe (defined as being equal to 1). For example, a 90° Ø80 bend in flue gas exhaust has a loss equivalent to 2.5 air-metres, that is equal to 2.5 linear metres of air intake pipe.

2 Once having completely defined the layout of the double flue system, add the losses in equivalent-metres, according to the position of installation of all the components and accessories in the system

3 Check that the total loss calculated is less than or equal to 100 equivalent metres, that is the maximum allowable for this model of boiler.

If the flue system chosen exceeds maximum allowable limit, some sections of the pipes should be larger in diameter.

2.13 Table of losses for piping and accessories

Tab. 1

Accessories Ø 80		Reduction			
		Air		Flue	
Description		Vertical	Horizontal	Vertical	Horizontal
Tubo Ø 80 male-female	KWMA38A • 0,50 m	0,5	0,5	0,8	1
	KWMA83A • 1,00 m	1	1	1,6	2
	KWMA06K • 2,00 m	2	2	3,2	4
	KWMA07K • 4,00 m	4	4	6,4	8
Female-female bend 45° Ø 80 mm	KWMA01K	1,2		1,8	
Female-female bend 90° Ø 80 mm	KWMA02K	2,0		2,5	
Male-female bend 90° Ø 80 mm	KWMA82A	1,5		2,0	
Pipe fitting M/M/F Ø80 with inspecting plug+trap for condensate drainage system	KWMA05K			7	
Condensate flue outlet	KWMA55U			3	
Spigot and socket reduction Ø 80/100 mm	KWMA03U	0			

Tab. 2

Accessories Ø 80		Reduction			
		Air		Flue	
Description		Vertical	Horizontal	Vertical	Horizontal
Airwall terminal products of combustion Ø80 mm	KWMA86A				5
Air terminal of inlet protection Ø80 mm	KWMA85A		2		
Outlet flue air inlet for concentric system Ø80	KWMA83U + KWMA86U			4	
Pipe fitting for outlet flue Ø80 mm					
Outlet flue air inlet for connection with split end Ø80 mm	KWMA84U	12			

The loss values listed refer to original FERROLI pipes and accessories

Tab. 3

Accessories Ø 60		Reduction			
		Air		Flue	
Description		Vertical	Horizontal	Vertical	Horizontal
Male-female flue Ø 60	KWMA89W • 1,00 m	3	3	4,0	4,5
Male-female bend 45° Ø 60 mm	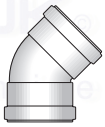 KWMA39W	3		4,5	
Male-female bend 90° Ø 60 mm	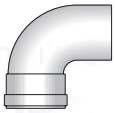 KWMA88W	4		5,2	
Airwall terminal products of combustion Ø60 mm	KWMA90A				9
Air terminal of inlet protection Ø60 mm			3		

For other accessories please refer to the manual: “Flue accessories and installation of forced air appliances”

Example of how to calculate the connection of two separate pipes, max flue length: 100 metres
The flue and air pipes must be sloped towards the boiler by at least 3%.

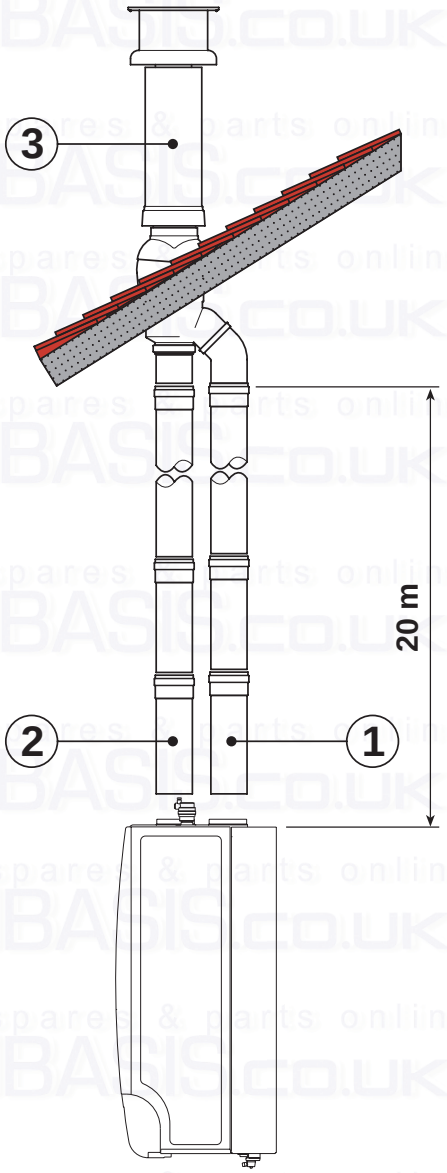

Fig. 17

Ref.	N° Pieces	Description	Length o loss
1	20	Vertical flue pipe	32 m
2	20	Vertical air pipe	20 m
3	1	Flue	12 m
		Total	**64 m**

2.14 Terminal Position

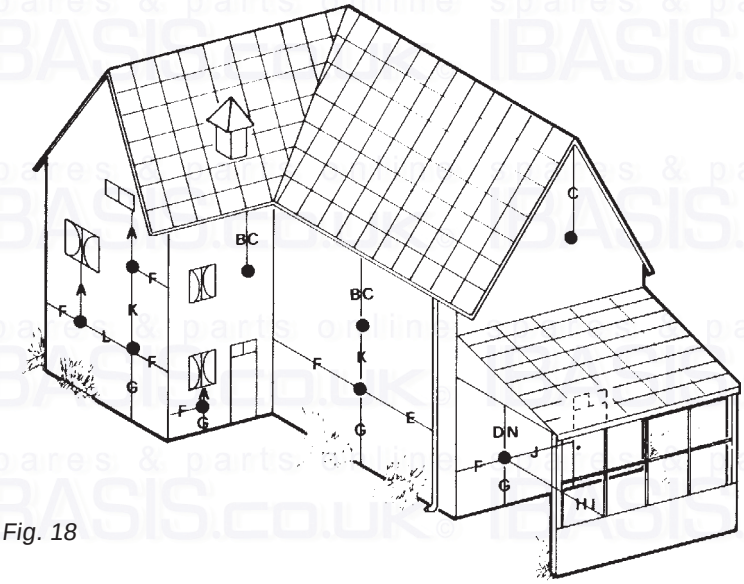

Fig. 18

POSITION	MINIMUM SPACING	mm
A	Directly below an openable window, air vent, or any other ventilation opening	300
B	Below gutters, soil pipes or drainpipes	75
C	Below Eaves	100
D	Below a Balcony	100
E	From vertical drainpipes or soilpipes	75
F	From internal or external corners	100
G	Above adjacent ground or balcony level	100
H	From a surface facing the terminal	600
I	Facing another terminal	1,200
J	From opening (door/window) in carport into dwelling	1,200
K	Vertically from a terminal on the same wall	300
L	Horizontally from a terminal on the same wall	300
N	Below carport	600

A Quinnel Barrat and Quinnel guard (part. No. C2) should be screwed to the wall centrally over the terminal, when the terminal height is less than 2 m from floor level.

3. SERVICE AND MAINTENANCE

3.1 Settings

Gas conversion

The adjustment and transformation operations must only be performed by Qualified Personnel.

FERROLI S.p.A. declines all liability for damage to persons and/or things deriving from tampering with the appliance by non-authorised persons.

The appliance can operate with natural or LPG supply gas, and is factory configured for use with one of the two gases, as is clearly marked on the packaging and on the rating plate on the appliance itself.

If the appliance has to be used with a gas other than the one it has been set for, it is necessary to insert (or remove) the restrictor between the gas valve and the air inlet Venturi, and operate on the regulation screw F (fig. 19) placed on the Venturi unit to regulate the CO_2 content in the flue gas to the nominal value (within +/- 0.1%) described in the following table:

Category	Supply gas	Restrictor	Nominal CO_2 at maximum power
2H	**Methane (G20)**	-	9,5 %
3P	**Propane (G31)**	Ø 5,1 mm	10,2 %

To convert proceed as follows:

1. Remove the lower protection plate and open the boiler casing
2. If necessary, insert or remove the restrictor following the instructions to points 3-11, otherwise go to point 12

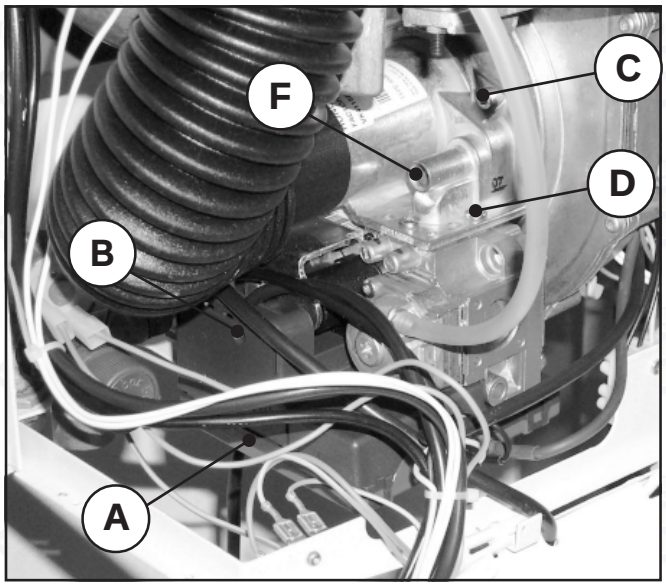

Fig. 19

3. Disconnect the gas and the electrical power supply if the boiler is already installed
4. Remove the ignition device “A” from the valve body, removing the fastening screw ”B”
5. Unscrew the union nut between the gas valve and the gas inlet pipe
6. Remove the flexible inlet air pipe from the Venturi mouthpiece on the fan

7 Unscrew the fastening screws “C” and remove the Venturi unit + gas valve

8 Unscrew the three fastening screws “D” and separate the gas valve and the Venturi

9 Replace the diaphragm “E”, making sure the new restrictor and the gasket are repositioned correctly inside the housing in the valve body

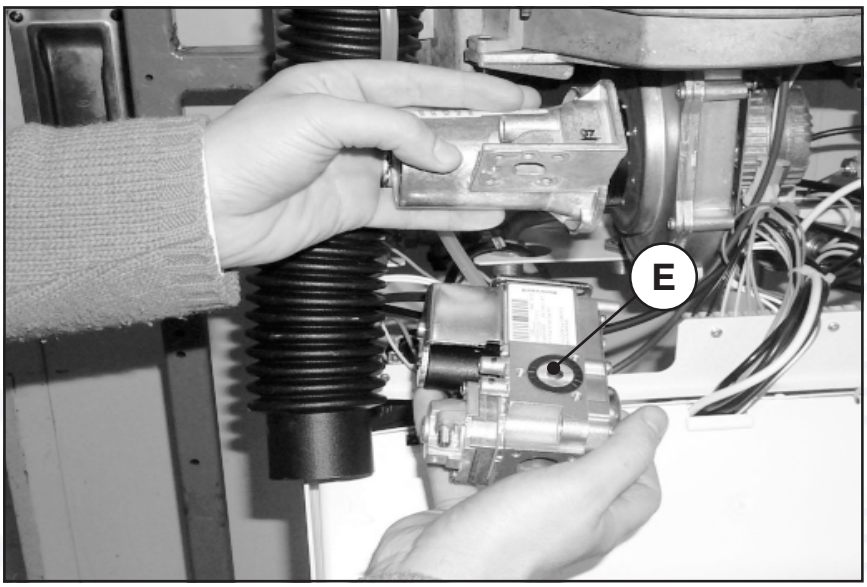

Fig. 20

10 Reassemble the gas valve, ignition device, connections, following the previous instructions in the reverse order

11 Check the seal of the gas connections

12 Insert the probe of a combustion analyzer in the outlet flue gas of the boiler

13 Turn on the boiler and bring the burner to the maximum power: it is advised to open one or more DHW taps and verify on the display that the parameter 8 (boiler power) arrives to 99.

14 By means of the analyzer, note the CO_2 content in the flue gas with boiler to maximum power

15 If necessary, slowly operate on the regulation screw F (fig.19) placed on the Venturi to bring the CO_2 content to the nominal value (within +/- 0.1%) expected in the table for the correspondent gas type. It is recommended to operate only on the screw F and not on the gas valve: this operation could compromise the correct functioning of the appliance

16 Once the regulation has been made, apply the orange plate contained in the transformation kit next to the data plate and reassemble the boiler casing and the lower protection plate.

° t setting

The thermal head ° t, that is the difference in heating water temperature between the central heating outlet and return, can be set by varying the speed of the pump system (Fig. 21- A). Note that an increase in speed corresponds to a reduction of the ° t, and vice-versa. The curve of flow rate/ head of the standard pump is shown in Chapter 1.

To fully exploit the advantages of condensation, the central heating return inlet should work at low temperatures, possibly below 45-50 °C. The boiler will also work correctly at higher return temperatures, but in this case the temperature of the flue gas outlet is near to or above the dew point, with consequent reductions in condensation.

One specific feature of the ARENA boiler is the possibility to work with high ° t, up to 50°C. This feature can be exploited to maintain a low central heating return inlet temperature even when the required outlet temperature is high, and thus allow the appliance to operate in full condensation mode.

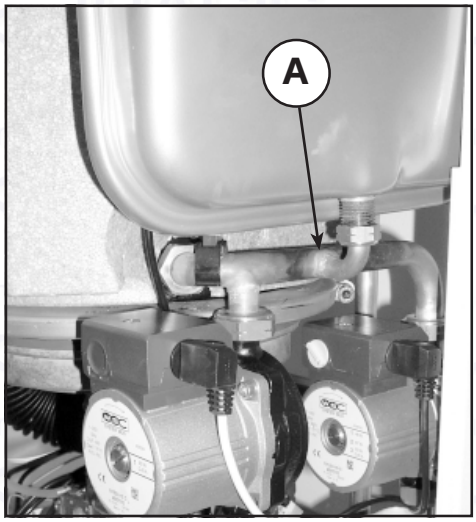

Fig. 21

Bypass setting

The boiler is fitted with a bypass between the outlet and return, which guarantees minimum circulation inside the appliance even with systems fitted with full-closing thermostatic zone valves. To adjust the bypass, use a screwdriver on the adjustment cock, operating from the bottom of the boiler

Adjusting the hydraulic system pressure

The fill pressure with the system cold, read on the boiler hydrometer **"B"**, must be around 1.5 bar. If the system pressure falls during operation (caused by the evaporation of the gases dissolved in the water) to values below the minimum described above, reset the initial value. For correct boiler operation, the pressure inside, when hot, must be around 2 – 2.5 bar.

Fig. 22

3.2 Commissioning and testing

The appliance must only be set-up for use by Qualified Personnel, such as personnel from Technical organization.
Checks to be performed during the first ignition, and after all maintenance operations which may have required the disconnection of the systems or intervention on the safety devices or parts of the boiler:

Before igniting the boiler:

- Open any shut-off valves between the boiler and the systems
- Check the seal of the gas system, proceeding with care and using a soapy water solution to find any leaks from the connections.
- Fill the system as indicated earlier and ensure that the air contained in the boiler and the system has been completely vented, by opening the air bleeding valve on the top of the appliance (Fig. 2) and any bleeding valves in the system.
- Check that there are no water leaks in the heating system, in the domestic hot water circuits, in the connections or in the boiler
- Check the correct connection of the electrical system
- Check that the appliance is properly earthed;.
- Check the correct connection of the appliance to the system for draining the condensation and the functioning of the condensation drain system itself.
- Check that the pressure value and gas rate for the heating system are correct.
- Check that there are no flammable liquids or materials in the immediate vicinity of the boiler

Igniting the boiler:

- Open the gas cock upstream from the boiler.
- Bleed the air in the pipe upstream from the gas valve.
- Close any switches or insert any plugs upstream of the boiler
- Place the main switch in the ON position.
- The boiler will switch on and perform a complete self-test cycle lasting around one minute, to check the operation of the main parts. The display shows, in sequence:

  Software version
  Parameter version
  Operation in test - (F Hl)

- If the cycle is performed correctly:
  - If domestic hot water or heating is not required, the display shows a small “o“ (standby mode) followed by the temperature value of the outlet sensor. Then use the room thermostat or remote control to activate the request for heating
  - If there is a request, the display will pass from the standby phase “ o “ to the heating phase “ c “ and the boiler will automatically begin operation, controlled by its regulation and safety devices.
  - If anomalies arise during the self-test cycle or the successive ignition phase, the display will show the corresponding error code and the boiler will shut-down. Wait around 15 seconds and then press the reset button. The boiler will repeat the ignition cycle. If, after a second attempt, the boiler does not start, refer to the paragraph on “Troubleshooting” 3.5.

Note In the case of power failures while the boiler is in operation, the burner assembly will switch off. On the return of mains power, the boiler will again perform the self-test cycle, following which the burner assembly will automatically restart (if there is still a request for heat).

Checks during operation

- Ensure there are no gas or water leaks.
- Check the efficiency of the flues and air-flue gas pipes during the operation of the boiler.
- Check that the water circulation between the boiler and the systems is correct.
- Ensure that the gas valve modulates correctly both in the heating phase and the production of domestic hot water.
- Check the correct ignition of the boiler, effecting a series of ignition and shut-down tests using the room thermostat or the remote control.
- Ensure that the consumption of the fuel indicated by the counter corresponds to the values indicated in table at pag. 9.
- Ensure that without the request for heating the burner assembly turns on correctly on opening a domestic hot water tap. Check that during operation in heating mode, on opening a domestic hot water tap, the heating pump switches off, the domestic hot water pump starts and there is regular production of domestic hot water.
- Check the correct setting of the parameters and effect any custom settings required (compensation curve, heat rates, temperatures, etc.)

Shut-down

Close the gas cock upstream from the boiler and disconnect the electrical power supply to the appliance.

Warning - For long periods of inactivity during the winter months, in order to avoid damage due to freezing, all the water should be drained from the boiler, both the domestic hot water and the heating system; alternatively, drain only the domestic hot water and introduce the relative antifreeze into the heating system.

3.3 Maintenance

The following operations must only be performed by Qualified Personnel, such as personnel from our Technical Organization.

Seasonal checks on the boiler and the flue

The following checks should be made on the appliance at least once a year:

- The control and safety devices (gas valve, flow-meter, thermostats, etc.) must be working properly.
- The pipes and the air-flue gas terminals must be free of obstacles and not contain any leaks.
- The condensation draining system must be efficient and must not contain any leaks or blockages
- The gas and water systems must be perfectly sealed.
- The burner assembly and the heat exchanger must be clean. Follow the instructions in the next paragraph.
- The electrodes must be free of deposits and positioned correctly.
- The pressure of the water system when cold must be around 1 – 1.5 bar; if not, reset this value.
- The expansion vessel must be full.
- The circulation and domestic hot water pumps must not be blocked.

Cleaning the boiler body and the burner assembly

The burner assembly and the parts of the boiler body in contact with condensation should be cleaned once a year. To clean these parts, use soft brushes or compressed air; do not use chemical products or steel brushes.

To dismount the burner assembly and access the boiler body, proceed as follows:

1. Close the gas supply cock and disconnect the electrical power supply
2. Remove the lower protection plate and the boiler casing
3. Disconnect cables **"G"** and **"H"** of the electrodes from the ignition devices, Fig. 23a
4. Remove the ignition devices from the valve body, unscrewing screw **"A"**
5. Loosen the two fastening screws **"B"** and slide the control panel support bracket **"C"** and all the wiring forward. Fasten the bracket in the position of maximum extension
6. Disconnect the gas valve from the gas inlet pipe, unscrewing the union nut behind the valve, disconnect the flexible inlet air pipe coupling **"E"** from the fan and the compensation pipe **"F"** from the gas valve.
7. If there is less than 30 centimetres free space below the fan, remove the fan-gas valve unit by unscrewing the 4 fan fastening nuts. If the space is greater, this is not necessary, and the entire unit can be removed together with the burner assembly hexagonal support base (see following points).
8. Progressively unscrew the 3 fastening nuts **"L"**. Once removed, the unit **"M"** - burner assembly, electrodes, hexagonal support base - can be removed from the boiler body as indicated in the series of images 23d - 23g. Intervene with care, avoiding excessive force on the fins of the hexagonal support base if the gasket **"K"** opposes resistance due to deposits. Some drops of water or residues may by released; avoid where possible having these come into contact with the electrical parts.

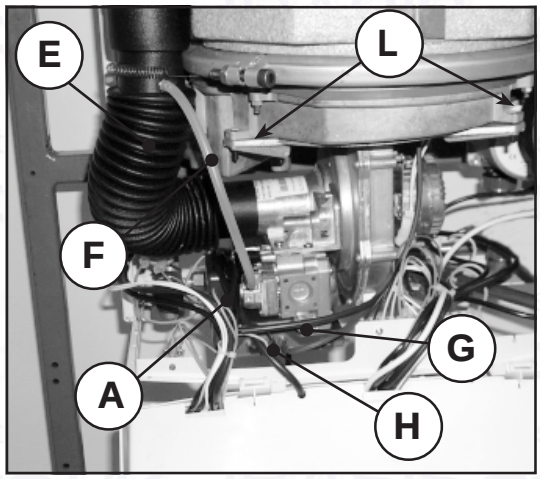

Fig. 23a

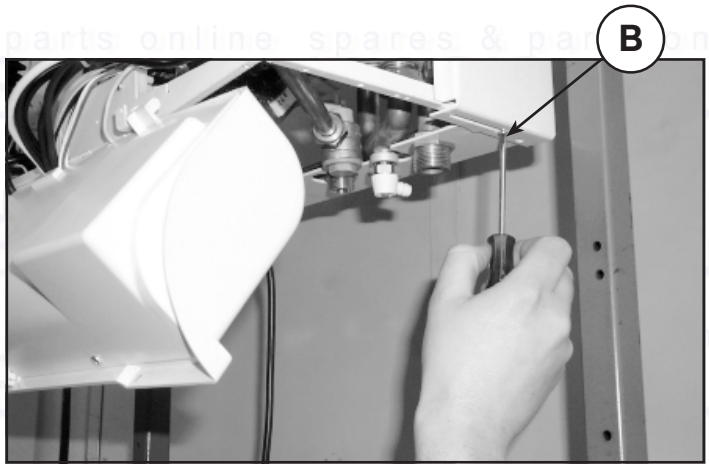

Fig. 23b

WARNING **The hot wire spark electrode is fragile! Both during and after removal handle the unit "M" with care to avoid damaging the electrode.**

9. The burner assembly can be cleaned in place or removed by unscrewing the three fastening screws on the hexagonal support base.

10. The lower part of the boiler body – where condensation takes place - can now be accessed for cleaning. Carefully clean the fins **"N"** and the condensation collection and discharge area **"O"**.
The upper part where the burner assembly is located does not require special maintenance. If necessary, blow with compressed air to eliminate small residues of combustion.

11. Follow the previous instructions in the reverse order and reassemble the boiler. Always work with caution and pay special care to all the sealing systems, especially the gas seals and the gasket **"K"** between the burner assembly hexagonal support base and the condensation collector.

12. Once the boiler has been reassembled, perform a complete operating test (as specified in the previous chapter), checking all the phases of ignition and operation, and the correct functioning of the safety and control devices, the sensors, thermostats, gas valve, fan and pumps.

13. Check that there are no gas leaks, including the parts inside the boiler (gas pipe, gas valve connections, fan connections).

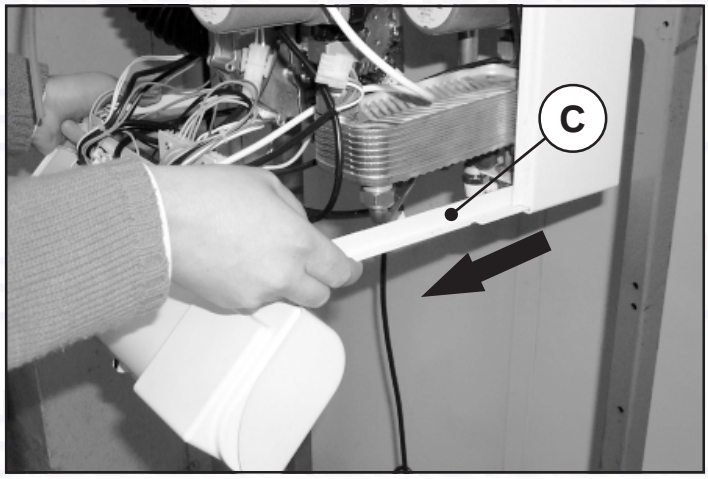

Fig. 23c

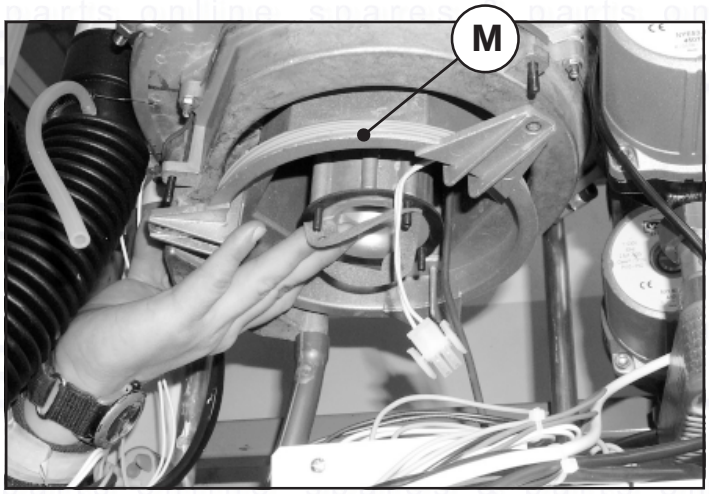

Fig. 23d

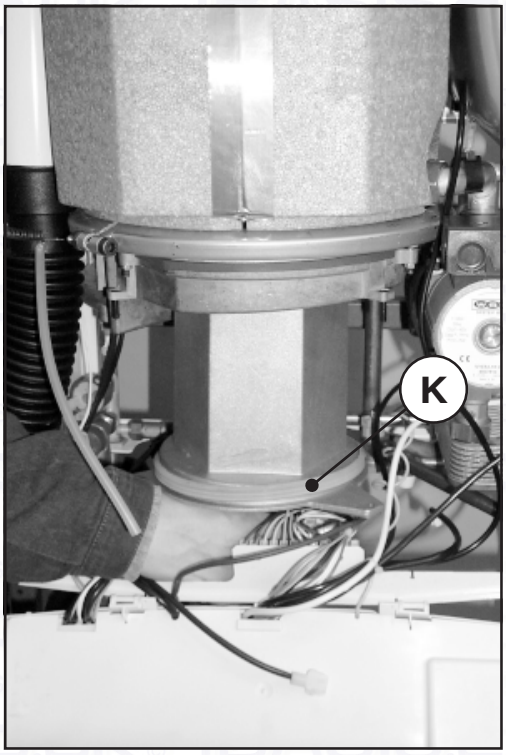

Fig. 23e

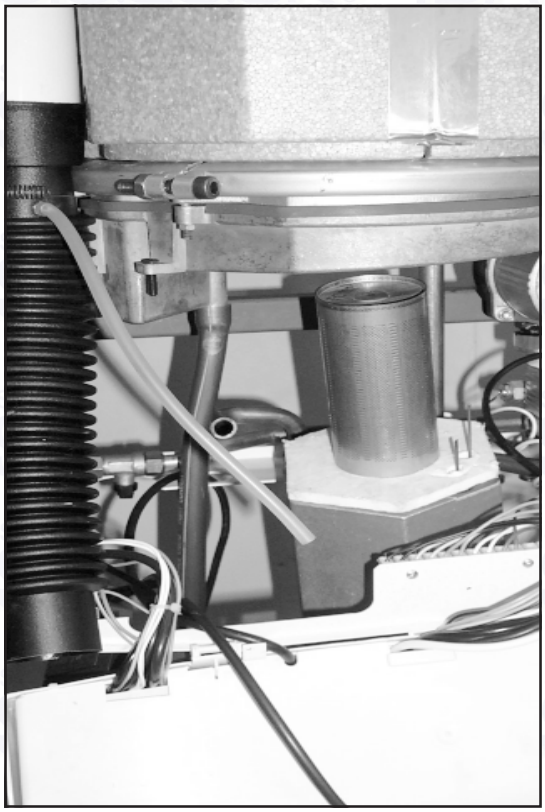

fig. 23f

fig. 23g

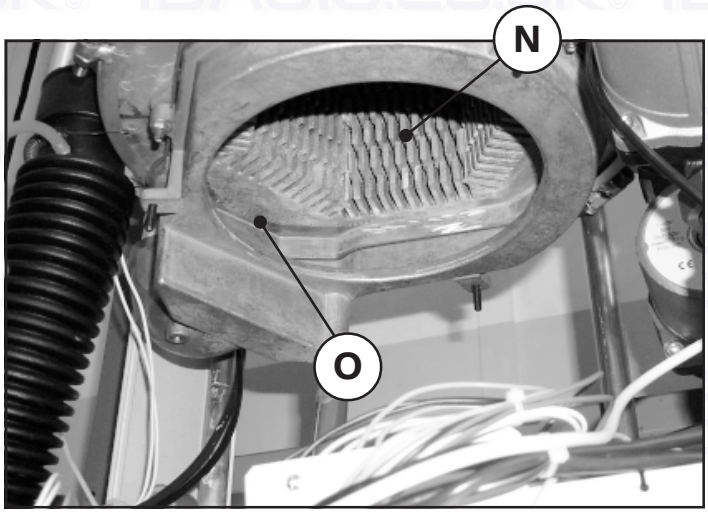

fig. 23h

spares & parts online IBASIS.CO.UK

3.4 Replacement of parts

Initial procedure

a) The boiler is cold, electricity supply is isolated, and the gas supply is turned off at the inlet of the boiler
b) For replacement of parts where water connections are broken, it will be necessary to isolate and drain either or both the central heating or domestic hot water circuits of the boiler only. The cold water mains inlet is isolated at the inlet cock. The D.H.W. is drained by opening a hot tap.
The C.H. flow and return cocks are turned off at the isolation cocks. The C.H. is drained via the pressure relief valve (twist about 1/2 of a turn) and the discharge tap on right .
c) Remove components following special notice below and replace in reverse order.
d) Ensure water and gas washers are in good condition.

Removing Boiler Jacket and sliding control panel

To remove the boiler jacket, unscrew the four screws on bottom of the boiler and the two screws on front supporting the control panel. Gently pull up the jacket.

If necessary, to have more space for working, the control panel could be slid forward , loosing the two screws “B” (fig. 23b) and pulling the support bracket “C” (fig. 23c)

Final procedure

- Re-open cocks and re-charge the system to about 1.5 bar, and vent boiler and radiators. Re-charge to 1.5 bar if necessary.
- Upon completion of the work the following. Should be checked:
  1) Gas soundness of all joints
  2) Water soundness of all joints
  3) The electricity supply.
  4) The pressure of the sealed system and top up where necessary.

Gas valve

- Isolate gas and electricity supplies
- Remove the lower protection plate jacket
- Remove the ignition device “A” from the valve body, removing the fastening screw “B”
- Unscrew the union nut between the gas valve and the gas inlet pipe
- Remove the flexible inlet air pipe from the Venturi mouthpiece on the fan
- Unscrew the fastening screws “C” and remove the Venturi unit + gas valve
- Unscrew the three fastening screws “D” and separate the gas valve and Venturi

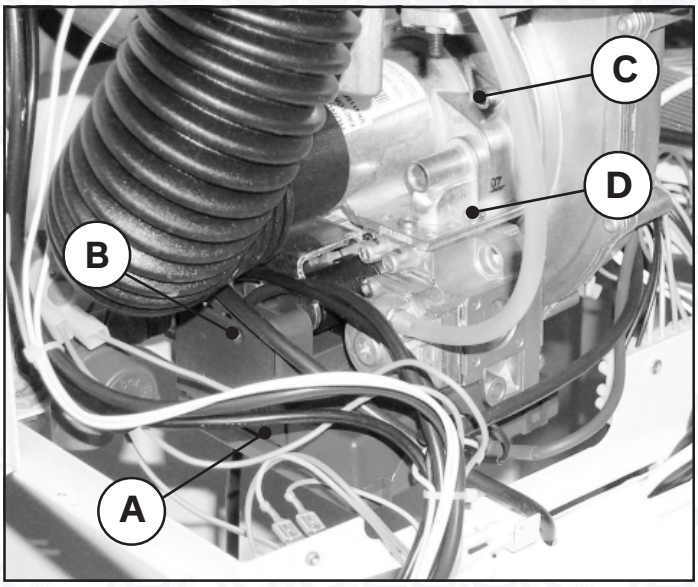

Fig. 24

Fan

- Isolate gas and electricity supplies
- Remove the lower protection plate and jacket
- Remove the ignition device “A” (fig. 24) from the valve body, removing the fastening screw “B” (fig. 25)
- Unscrew the union nut between the gas valve and the gas inlet pipe
- Remove the flexible inlet air pipe from the Venturi mouthpiece on the fan
- Unscrew the four nut “A” fixing the fan (fig. 25)
- Unscrew the fastening screws “C” (fig. 24) and remove the Venturi unit + gas valve

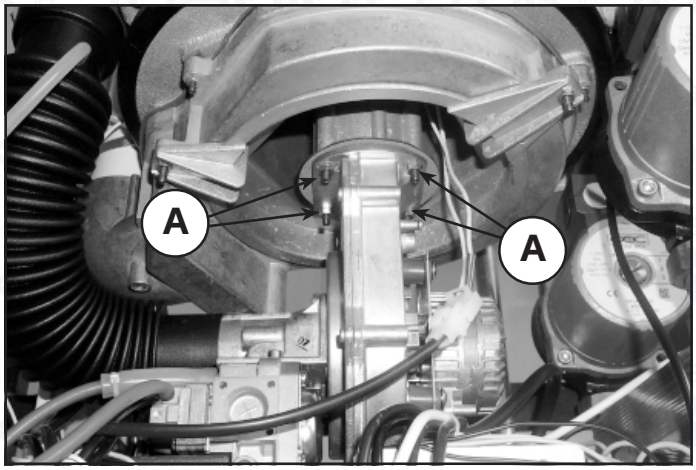

Fig. 25

Burner and electrodes

- Follow the “cleaning procedure” at page 29 from 1 to 8 to remove the burner assembly
- Carefully remove the hexagonal ceramic fibre
- To change the burner, remove the three fastening screw “A” (fig. 26)
- To change electrodes, unscrew the two screws to the supporting plate and remove it. Undo the brass nuts, to electrodes “B” (fig. 26). Reassemble reverce order.

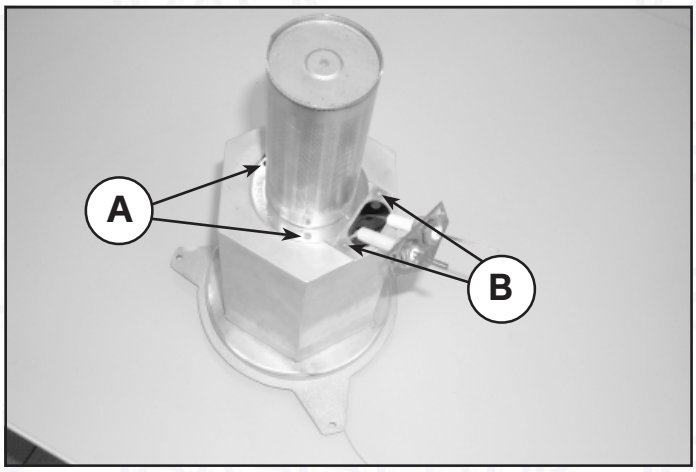

Fig. 26

Replacement of pump head (fig. 27)

- Isolate electricity and flow and return pipes
- Remove casing
- Release pressure from boiler via pressure relief valve
- Unplug the pump lead “B” from the pump head
- Place a piece of cloth or other absorbent material over the rear of the control panel to catch any drops of water that may fall when the pump head is removed.
- Using a 4 mm allen wrench undo the two allen screws “C” in the pump head, lift away pump head from the pump body
- Fit new head into pump body and secure with the allen screws tightening evenly.
- Replace electrical connection.

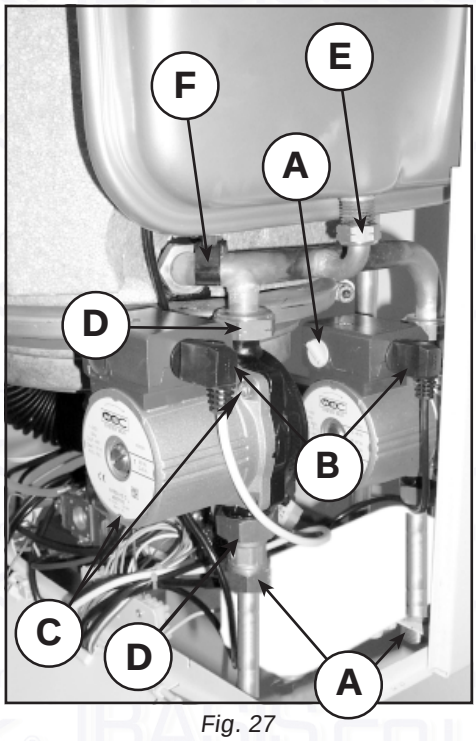

Fig. 27

Replacement of pump body (fig. 27)

- Proceed as for removal of pump head
- Disconnect the two nuts “D“ fixing the pump body
- Remove pump
- Reassemble in reverse order taking care to ensure the O-rings are in place and undamaged.

Expansion Vessel (fig. 27)

Isolate electricity and water supplies

Remove outer case

Loosen the “E” connections to expansion vessel

Remove the expansion vessel

Re-assemble in reverse order

Re-pressure expansion vessel

(charge pressure 0,8-1 bar) through the air charging valve

Ensure pressure relief value is open

(twist about 1/2 of a turn) when repressurizing

Return temperature sensor (fig. 27)

- Isolate electricity
- Remove outer case
- Pull out sensor “F” from tube, with its spring
- Remove electrical connections from sensor
- Remove spring from sensor
- Replace in reverse order

C.H. temperature sensor, overheat cut off thermostat

- Isolate electricity
- Remove outer case
- Identify the location of thermostat from fig. 28
- Pull out thermostat or sensor from tube, with its spring
- Remove electrical connections from sensor or thermostat
- Remove spring from sensor or thermostat

Replace in reverse order

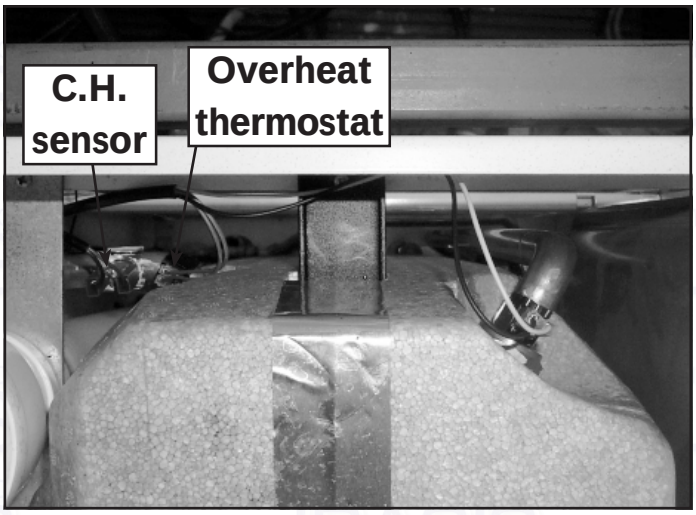

Fig. 28

3.5 Troubleshooting

Diagnostics

The boiler features an advanced self-diagnostic system. In the case of an fault in operation, the display flashes and the code identifying the fault appears. The faults marked with the letter **"A"** cause the permanent shut-down of the boiler. To reset operation the boiler must be restarted manually, pressing the **"R"** (reset) button.

The faults marked by the letter **"F"** cause temporary shut-down and are reset automatically as soon as the value returns within the boiler's normal operating range.

The following table lists a number of indications for resolving the faults signalled by the boiler. Interventions on the appliance must be effected only by Qualified Personnel, such as the personnel from the FERROLI Customer Technical Service Centre. For any operations on the appliance or which require the opening of the boiler, always request the assistance of the service centre.

	Fault	Possible cause	Solution
A01	Failed burner assembly ignition	• No gas • Ignition or detection electrode fault • Defective gas valve	• Check that the gas flow to the boiler is correct and that air has been eliminated from the piping • Check the wiring to the electrodes and that these are positioned correctly and free of deposits • Check and replace the gas valve
A02	Safety thermostat activation	• Outlet sensor not active • No system circulation	• Check the correct positioning and operation of the outlet sensor • Check the pump
A03	Flue safety device intervention	• Flue partially blocked or insufficient	• Check the efficiency of the flue, the flue gas exhaust pipes and the outlet terminal
A04	No flame following the ignition phase	• Air/flue pipes blocked	• Free the obstructions from the flue, flue gas exhaust and air inlet pipes and terminals
F05	Insufficient water system pressure	• System empty	• Fill the system
F06	Fan fault	• Fan not powered • Defective fan	• Check the wiring to the fan • Replace the fan

	Fault	Possible cause	Solution
F 07	High flue gas temperature	• Flue partially blocked or insufficient	• Check the efficiency of the flue, the flue gas exhaust pipes and the outlet terminal
F 08	Excessive central heating outlet temperature	• Pump blocked • Pump faulty	• Free the pump by removing the cap and rotating the shaft with a screwdriver • Check or replace the condenser or the pump
F 09	Excessive central heating return temperature	• No system circulation • Domestic hot water heat exchanger dirty or blocked	• Check system and pump • Clean domestic hot water heat exchanger
F 10	Outlet sensor faulty	• Sensor damaged or wiring cut	• Check wiring or replace the sensor
F 11	Return sensor faulty	• Sensor damaged or wiring cut	• Check wiring or replace the sensor
F 12	Domestic hot water sensor faulty	• Sensor damaged or wiring cut	• Check wiring or replace the sensor
F 13	Flue gas sensor faulty	• Sensor damaged or wiring cut	• Check wiring or replace the sensor
F 14	External probe faulty	• Sensor damaged or wiring short-circuited	• Check wiring or replace the sensor
A 16	No communication between main board and ignition devices	• Wiring cut or incorrect between main board and ignition devices	• Check the wiring and the connections between the boards
F 17 F 18 F 19	Microprocessor faulty	• Microprocessor operation faulty	• Disconnect and restore the electrical power supply. If the problem persists check and/or replace the main board

Fault	Possible cause	Solution
Display and boiler off	• Power failure	• Check or await the return of the electrical power supply
Radiators cold in winter	• Room thermostat adjusted too low or defective	• Adjust the knob to a higher temperature, replace if necessary
Radiators hot in summer	• Room thermostat adjusted too high or defective	• Adjust the knob to a lower temperature, replace if necessary
Large variations in domestic hot water temperature	• Water flow rate too low	• Increase the water flow rate (minimum three litres per minute)
Low domestic hot water flow	• Insufficient mains water pressure • Heat exchanger with passages partially blocked	• Install a pressure increase device • Request the cleaning of the heat exchanger
No domestic hot water flow	• Heat exchanger blocked • Defective flow-meter	• Request Engineer for the cleaning operations • Request Engineer for the replacement of the flow-meter
No temperature increase with boiler on	• Boiler dirty • Boiler insufficient	• Check and clean the boiler body • Check that the boiler is the right capacity for the requirements of the heating system
Loss of condensation from the boiler	• Condensation discharge blocked	• Check and clean the drain trap

4. OPERATING INSTRUCTIONS

4.1 Operation and controls

The Arena 30 A is a pre-mix condensing thermal generator for heating and the production of domestic hot water, using natural gas or LPG (configured at the moment of installation) and managed by an advanced microprocessor control system.

The operation of the appliance is mostly automatic. The heat rate for the heating function is regulated automatically by the control system according to the characteristics of the internal and external environment (with optional external probe installed), the characteristics of the building and its location. The heat rate for the domestic hot water function is regulated automatically and continuously, to ensure rapid delivery and comfort in all supply conditions.

The user simply has to set the required temperature from inside the living area (using the room thermostat or the optional, yet recommended, remote control) or set the heating system temperature and the required outlet temperature for the domestic hot water service. The regulation and control system will then provide for optimal operation all year round.

The display provides continuous indication on the operating status of the appliance, and can display additional information on the temperature of the sensors, the set-point, etc. or be used for the configuration of such via the operating menu, using the keypad.

Any anomalies in operation involving the boiler or the heating system are signalled on the display and, where possible, corrected automatically.

4.2 Boiler control panel

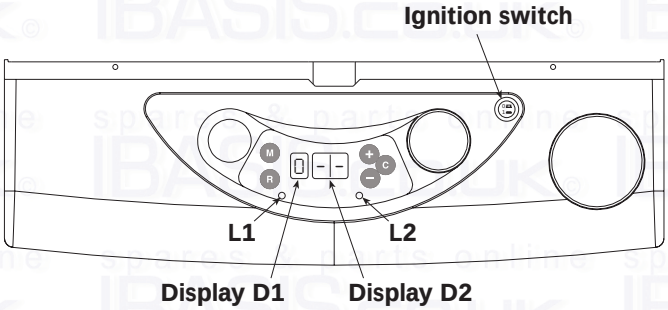

fig. 29

Function of the buttons

M	**MODE** button	- Use this button to scroll the parameters.
R	**RESET** button	- Use this button to reset the operation of the boiler in the event of shut-down.
+ / −	**MODIFY** button	- Use these buttons to modify the regulation values.
C	**CONFIRM** button	- Use this button to enable the set regulation value.

Display indications

D1	**MODE** display	- Indicates the operating mode of the boiler or the selected parameter.
D2 / D3	**DATA** display	- Indicates value of the parameters
○	Led **L1**	- Indicates: Economy Operation
○	Led **L2**	- Indicates: Comfort Operation

4.3 Ignition

Check than any shut-off valves in the heating system and domestic hot water circuit outside of the boiler are open. Open the gas cock upstream from boiler and press the main switch. The boiler will perform an self-test cycle lasting approximately one minute, at the end of which it is ready for operation. The ignition and shut-down of the burner assembly are completely automatic operations, which depend on the requirements of the heating system or domestic hot water circuit.

4.4 Shut-down

In the event of extended periods of inactivity close the gas cock upstream from the boiler and disconnect the electrical power supply to the appliance. In this case, the boiler antifreeze protection function is also disabled; this function switches on the burner assembly when the heating system temperature falls below 5°C. For extended periods of inactivity during the winter months, in order to avoid damage due to freezing, all the water should be drained from the boiler, both the domestic hot water and the heating system; alternatively, drain only the domestic hot water and introduce the special antifreeze into the heating system.

4.5 Operating indications on the display

During operation, without pressing any of the buttons the display shows the operating status of the appliance:

Operating mode	Display “D1”	Display “D2/D3”
Standby	o	Central heating outlet temperature
Heating	c	Central heating outlet temperature
Domestic hot water	b	Domestic hot water temperature
Standby following domestic hot water op.	P	Domestic hot water temperature
Standby following heating op.	9	Central heating outlet temperature
Waiting for DHW production	d	Domestic hot water temperature

4.6 Accessing the operating menu

Pressing the “(M) - mode” button once accesses the operating menu. Pressing the “(M) - mode” button again displays the following parameters and information in sequence:

DISPLAY D1	DISPLAY D2/D3
0 - -	Economy/Comfort Selection
1 - -	CH outlet temperature view and setting
2 - -	Display and setting DHW storage temperature
3 - -	Display system return temperature
4 - -	External temperature
5 - -	Flue gas temperature
6 - -	-
7 - -	Domestic hot water flow rate
8 - -	Boiler power
9 - -	Compensation curve setting

4.7 Setting the heating system temperature

Set, using the room thermostat or remote control, the desired temperature inside the rooms. When acting on the room thermostat, the boiler is turned on and the heating system water is brought to the central heating outlet set temperature or calculated temperature (with temperature scrolling active). On reaching the required temperature inside the rooms, the generator will switch off.

If no room thermostat or remote control is installed, the boiler will maintain the heating system temperature at the central heating outlet setpoint.

To set the central heating outlet temperature, access the operating menu, and using the button (M) display parameter 1 – central heating outlet temperature. On pressing one of the buttons (+)/(−) the display will start to flash, showing the outlet temperature setpoint. Use the buttons (+)/(−) to set the required value. To activate the new value, press the button (C). To cancel the setting, do not press the button (C), and press the button (M).

4.8 Setting the domestic hot water temperature

Set, using the control boiler panel, the required domestic hot water outlet temperature. On opening a hot water tap, the system regulates itself to supply water at the set temperature, according to the flow rate of delivery and the temperature of the cold water supplied to the boiler. If in terms of delivery or temperature difference between the inlet and outlet, the thermal capacity of the generator is exceeded (refer to the technical data), the outlet temperature will be proportionally lower than the setpoint.

To set the domestic hot water outlet temperature, access the operating menu, and using the button (M) display parameter 2 – domestic hot water temperature. On pressing one of the buttons (+)/(−) the display will start to flash and the domestic hot water outlet temperature setpoint will be displayed. Use the buttons (+)/(−) to set the required value. To activate the new value, press the button (C). To cancel the setting, do not press the button (C), and press the button (M).

4.9 DHW storage exclusion

The customer can exclude the heating/maintenance in temperature of DHW storage. In case of exclusion, there will not be supply of domestic hot water.

4.10 Outside temperature compensation

When the (optional) external probe is installed, the boiler regulation system functions in “Outside temperature compensation” mode. In this mode, the temperature of the heating system is regulated according to the external climatic conditions, so as to guarantee a high degree of comfort and energy saving all year round. Specifically, when the external temperature falls, the central heating outlet temperature is increased, according to a pre-determined “compensation curve”.

In this mode, the temperature set in parameter 1 of the operating menu becomes the maximum central heatin g outlet temperature. This should be set to Maximum to allow the system to regulate over the entire working range.

The boiler must be set during installation by qualified personnel. Other minor modifications can be made by the user to improve the level of comfort: the compensation curve can in fact be modified by accessing the operating menu with the button (M) and scrolling the menu, again using the button, to parameter 9.

The set compensation curve is displayed (refer to graph below). Pressing one of the buttons (+)/(−) the display starts to flash; use the buttons (+)/(−) to set the required value. To activate the new curve, press the button (C). To cancel the setting, do not press the (C) button, and press the button (M).

If the ambient temperature is lower than the required value, it is suggested to set a higher curve, and vice-versa. Proceed with single unit increments or decreases, and check the results in the room.

Compensation curve

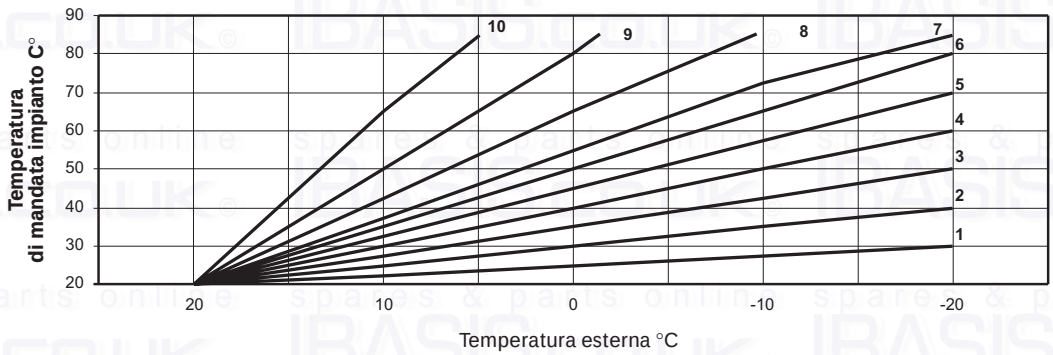

4.11 Maintenance

It is strongly recommended to effect the annual maintenance of the heating system and at least biennial checks of the combustion device. Please refer to the “maintenance” section in this manual.

The casing, the control panel and the aesthetic parts of the boiler can be cleaned using a soft and damp cloth. Do not use abrasives or solvents.

4.12 Anomalies

In the event of operating anomalies or problems, the display flashes and shows the code identifying the anomaly.

The anomalies marked by the letter **“F”** cause temporary shut-down, and are reset automatically as soon as the value returns within the boiler’s normal operating range.

The anomalies marked by the letter **“A”** cause a shut-down of the boiler which can be reset by the user. To reset operation, press the (R) (reset) button.

If the problem persists, or for any other anomalies, please refer to the “troubleshooting” chapter in this manual for more details.

spares & parts online
IBASIS.co.uk©

IMPORTANT

"All CORGI Registered Installers carry a CORGI ID card and have a registration number. Both should be recorded in your central heating log book. You can check to the CORGI registered by calling CORGI on 01256 372300".

Should you require help with any difficulties call our Technical Service Helpline on 0121 352 3200

Phone numbers:

Installer _____

Service Engineer _____

BECAUSE OF OUR CONSTANT ENDEAVOUR FOR IMPROVEMENT DETAILS MAY VARY SLIGHTLY FROM THOSE QUOTED IN THESE INSTRUCTIONS.

FERROLI S.p.A.

ALL SPECIFICATIONS SUBJECT TO CHANGE

Please note - to avoid incurring unnecessary expense, in the event of a boiler shut down, check this in not caused by lack of electricity supply, gas supply or low water pressure before calling our Customer Service Helpline.

Stockton Close, Minworth Industrial Park, Minworth, Sutton Coldfield, West Midlands B76 8DH

Tel: 0121 352 3200 Fax: 0121 352 3210

spares & parts online IBASIS.CO.UK