DOMINA 80 E

Copper Wall-Mounted Combination, Gas Fired Boiler for Central Heating and Domestic Hot Water Production, Fan Assisted, Room Sealed Compartment, Electronic Flame Ignition and Control

Appr. nr. B98.01 A - CE 0063 AT 4967

CE

3543064/1 - 07/99

INSTALLATION, SERVICE AND USER INSTRUCTIONS

G.C. NO: 47-267-23

spares & parts online IBASIS.CO.UK

IMPORTANT

From the 1st October 1999 your "benchmark" Installation, Commissioning and Service Record Log Book will be enclosed in your customer information pack.
"This record must be completed and left with the end user"

Ferroli is a member of the Benchmark initiative and fully supports the aims of the programme. Benchmark has been introduced to improve the standards of installation and commissioning of central heating systems in the UK and to encourage the regular servicing of all central heating systems to ensure safety and efficiency.

CE MARK

CE mark documents that the Ferroli gas appliances comply with the requirement contained in European directives applicable to them.

In particular, the appliances comply with the following CEE directives and the technical specifications provided from them:

- Gas appliances directive 90/396
- Efficiencies directive 92/42
- Low tension directive 73/23 (modified from the 93/68)
- Electromagnetic compatibility directive 89/396 (modified from the 93/68)

Year 2000 Compliance Declaration

We will guarantee that this products is altogether suitable for the data change in the Year 2000 (boiler has no dependence from date change) and that no disruptions will occur which is caused by this product.

INDEX

1.0 DESCRIPTION 3
2.0 TECHNICAL AND DIMENSIONAL CHARACTERISTICS 4
3.0 INSTALLATION DETAILS 11
4.0 COMMISSIONING AND TESTING 39
5.0 ADJUSTMENT AND GAS CONVERSION 41
6.0 MAINTENANCE AND CLEANING 44
7.0 REPLACEMENT OF PARTS 46
8.0 FAULT FINDING 52
9.0 ELECTRICAL AND FUNCTIONAL SCHEME 61
10. USER INSTRUCTIONS 64

1. DESCRIPTION

1.01 Introduction

The **Domina 80 E** is defined as a "room sealed" combination boiler, all air required for combustion is taken from outside the room in which it is installed. It is a new high performance gas fired heat generator for central heating and domestic hot water production. A special feature of this boiler is its built-in electronic flame ignition and control unit making burner operation completely automatic and safe. The main components are as follows:

- Copper heat exchanger consisting of three finned tubes specifically shaped for high efficiency.
- There are three copper coils inserted in the three heating circuit tubes. These represent the domestic hot water heat exchanger. Their shape and high exchange surface area enable the full output of the boiler to be absorbed.
- Ceramic fibre insulated combustion chamber
- 12 stainless steel bladed burners specifically designed for this boiler.
- Fan for discharge of combustion products and intake of combustion air.
- Differential air pressure switch. For safety reasons, this ensures the burner ignites only when the fan is functioning correctly.
- Hermetically sealed compartment made from corrosion-resistant steel enclosing the above components.
- Combination gas safety valve with modulator, complete with pressure stabiliser.
- Flowmeter giving the domestic hot water circuit precedence over the central heating circuit.
- Pressure relief valve for the central heating circuit set to open at 3 bar.
- Built-in Expansion vessel.
- Variable speed pump.
- Central heating flow temperature adjustment thermostat.
- Domestic hot water flow temperature adjustment thermostat.
- Central heating limit thermostat.
- Overheat safety thermostat.
- Electronic control unit for automatic flame ignition and control.
- Central heating low water pressure cut off switch.
- Domestic hot water flow temperature sensor.
- Central heating flow temperature sensor.

1.02 Instructions and regulations

Assembly, installation, first start up and maintenance must be carried out by competent persons only, in accordance with all current technical regulations and directives.

C.O.S.H.H.

Materials used in the manufacture of this appliance are non hazardous and no special precautions are required when servicing.

Related Documents

This appliance must be installed strictly in accordance with these instructions.
The Gas Safety Regulations (Installations & Use) 1996.
The Local Building Regulations.
The Building Regulations.
The Buildings Standards (Scotland - Consolidated) Regulations.

British Standards Codes of Practice:

B.S.	7593	1992	TREATMENT OF WATER IN DOMESTIC HOT WATER CENTRAL HEATING SYSTEMS
B.S.	5546	1990	INSTALLATION OF HOT WATER SUPPLIES FOR DOMESTIC PURPOSES
B.S.	5440	PART 1	FLUES
B.S.	5440	PART 2	AIR SUPPLY
B.S.	5449	1990	FORCED CIRCULATION HOT WATER SYSTEMS
B.S.	6798	1987	INSTALLATION OF GAS FIRED HOT WATER BOILERS
B.S.	6891	1989	GAS INSTALLATIONS
B.S.	7671	1992	IEE WIRING REGULATIONS
B.S.	4814	1990	SPECIFICATION FOR EXPANSION VESSELS
B.S.	5482	1994	INSTALLATION OF LPG

Model Water Bye Laws
For Northern Ireland the rules in force apply

2. TECHNICAL AND DIMENSIONAL CHARACTERISTICS

2.01 Technical information

Domina 80 E boilers are central heating and domestic hot water heat generators and are produced as standard to function with natural gas or LPG.

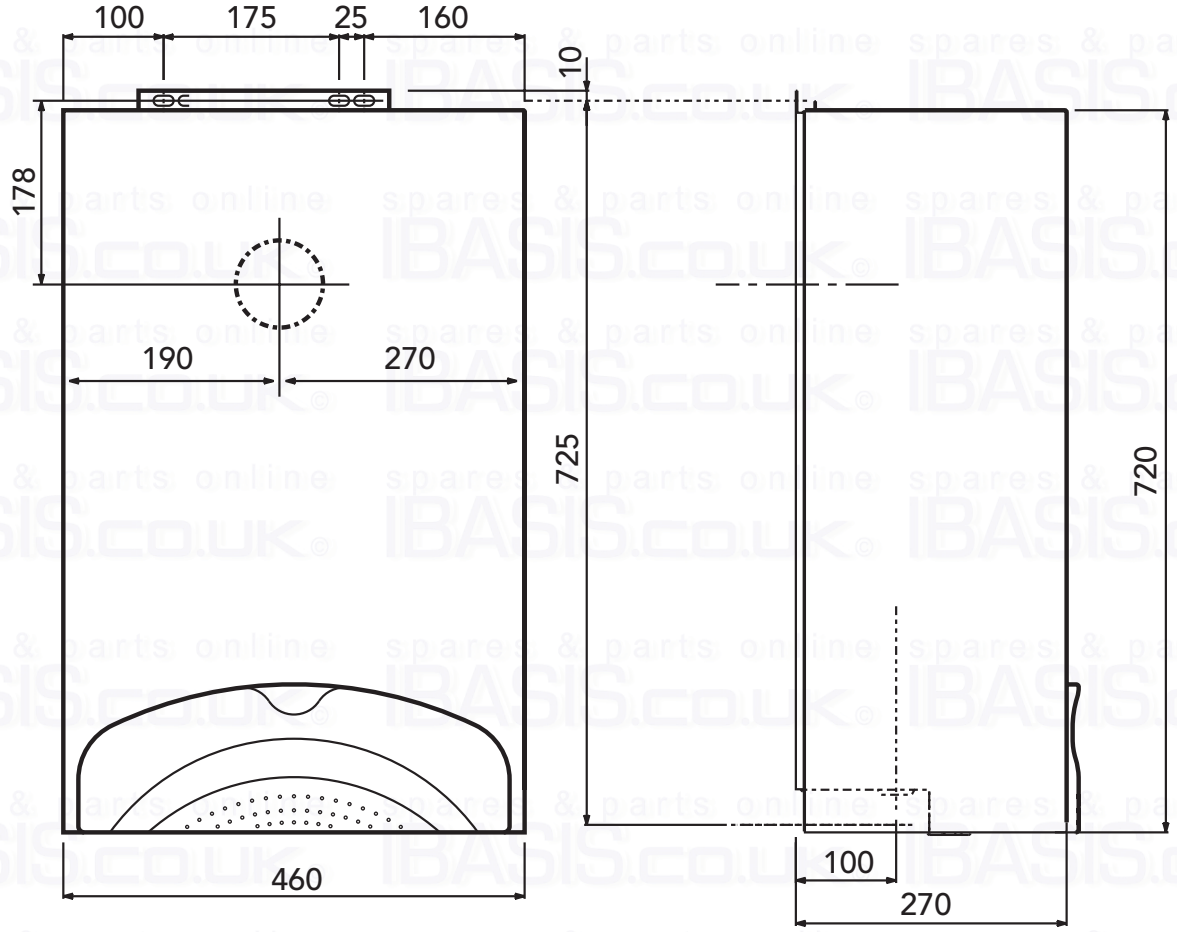

Boiler cover

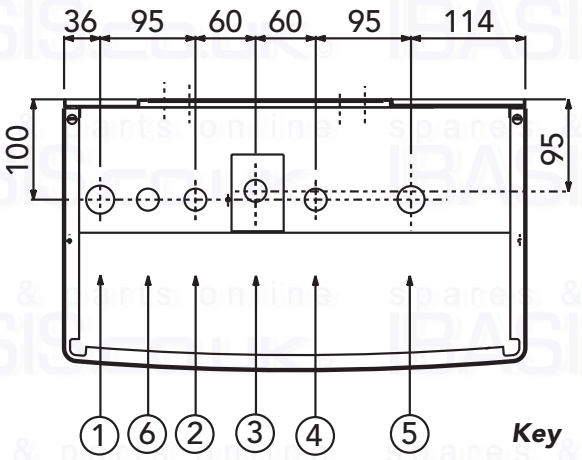

Boiler connections

Fig. 1

Key

1 *- 3/4" central heating flow outlet*
2 *- 1/2" domestic hot water flow outlet*
3 *- 1/2 " gas inlet*
4 *- 1/2" domestic hot water inlet*
5 *- 3/4" central heating return inlet*
6 *- Pressure relief outlet*

Technical Data

MODEL	Heat output		Heat input net		Heat input calculated on gross heat value (PCS)				Domestic hot water heat output	Boiler water contents	Domestic hot water circuit contents
					G20 - NG		G31 - LPG				
					Max.	Min.	Max.	Min.			
	kW	kW	kW	kW	kW	kW	kW	kW	kW	Litres	Litres
Domina 80 E	23,8	9,7	25,8	11,5	28,6	12,8	28,0	12,5	23,8	1,5	0,8

MODEL	Cennections					Expansion vessel		Max. pressure central heating circuit	Max. working pressure hot water circuit
	1	2	3	4	5	Capacity	Pre-pressurising value		
	Ø	Ø	Ø	Ø	Ø	Litres	bar	bar	bar
Domina 80 E	3/4"	1/2"	1/2"	1/2"	3/4"	7	1	3	6

MODEL	Main inyectors (mm)		Gas flow rates to main burners for central heating		Gas valve Ø 1/2"
	G20 - NG	G31 - LPG	G20 - NG	G31 - LPG	
	Ø	Ø	m^3/h	kg/h	
Domina 80 E	12x1,30	12x0,77	2,73	2,00	H. V K4105G

MODEL	Gas supply pressures		Gas pressure at main burner for central heating				Safety valve
	G20 - NG	G31 - LPG	G20 - NG		G31 - LPG		
			minimum	nominal	minimum	nominal	
	mbar	mbar	mbar	mbar	mbar	mbar	bar
Domina 80 E	20	37	2,5	11,8	7,8	36,0	3

MODEL	Domestic hot water production with Δt 30° C	Domestic hot water production with Δt 35° C	Gas pressure at main burner for D.H.W.		Protection level	Weight
			G20 - NG	G31 - LPG		
	l/min.	l/min.	mbar	mbar		kg
Domina 80 E	11,3	9,5	11,8	36,0	IP44	38

N.B. - **The gas pressures at the burner and gas flows during the** central heating phase **given in the table refer to** nominal boiler output**. To reduce this output (where necessary), gas pressure must be reduced until the required output level is reached (see figures 4 and 5).**

During domestic hot water production**, gas pressures to the burner** must correspond to the maximum output given in table for the type of gas**.**

Gas pressure must be adjusted during maximum draw-off of domestic hot water.

- Maximum working temperature for central heating flow: 85°C
- Maximum temperature of domestic hot water: 55°C, adjustable between 40°C and 55°C.
- Minimuum domestic cold water pressure required for 95% heat input:
  - Flow restrictor fitted (standard) - 1,2 bar;
  - Flow restrictor removed - 0,5 bar

2.02 Boiler main components

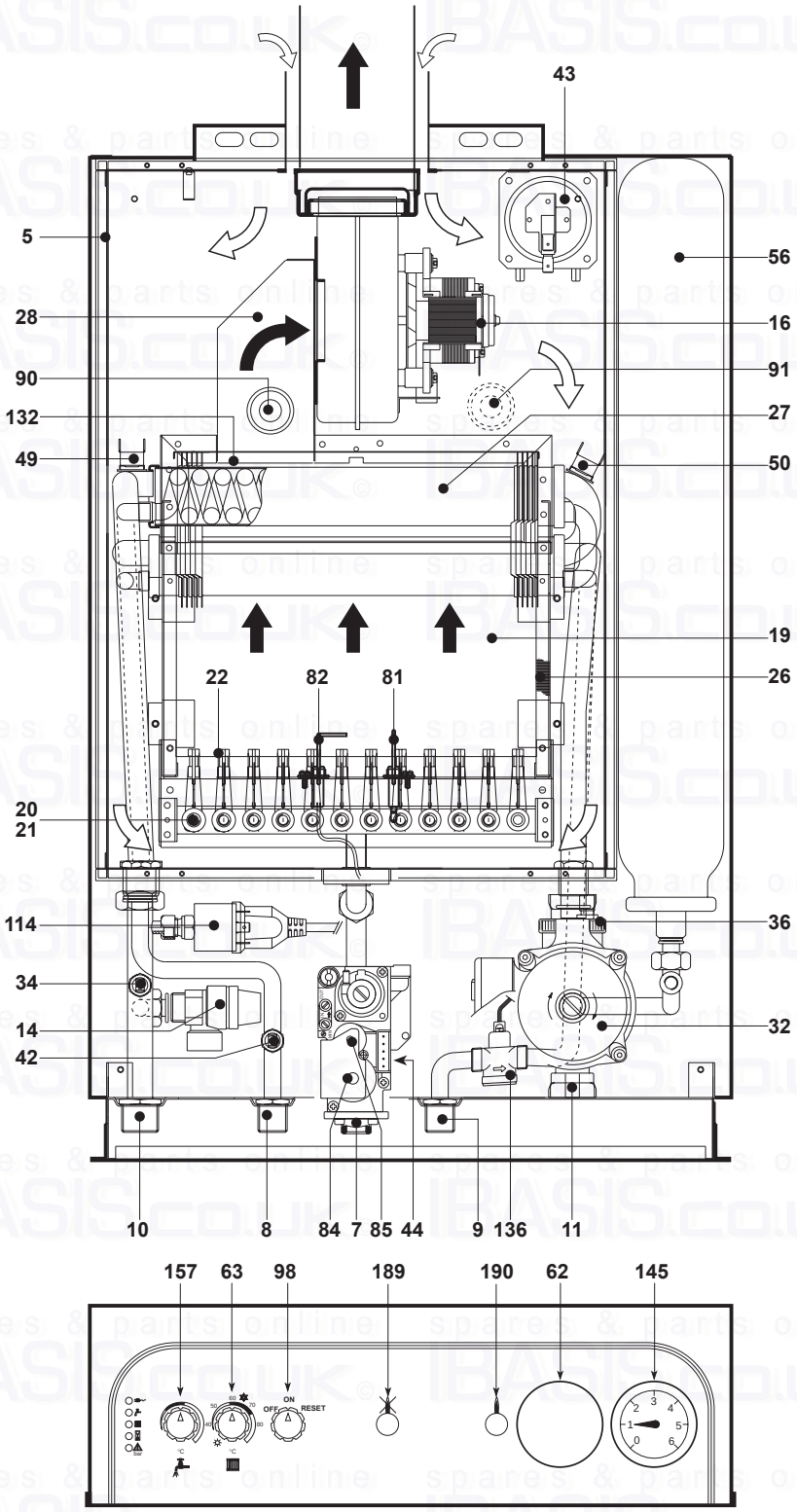

Fig. 2

Key

5	*Room sealed compartment*
7	*Gas inlet*
8	*Domestic hot water outlet*
9	*Domestic hot water inlet*
10	*Central heating flow outlet*
11	*Central heating return inlet*
14	*Safety valve*
16	*Fan*
19	*Combustion chamber*
20	*Burner assembly*
21	*Main injector*
22	*Burner*
26	*Combustion chamber insulation*
27	*Copper heat exchanger for central heating and domestic hot water*
28	*Flue collector from heat exchanger*
32	*Central heating pump*
34	*Central heating flow temperature sensor*
36	*Automatic air vent valve*
42	*Domestic hot water flow temperature sensor*
43	*Air pressure switch*
44	*Gas valve*
49	*Safety overheat thermostat*
50	*Central heating flow limit thermostat*
56	*Expansion vessel*
62	*Time clock (option)*
63	*Central heating temperature adjustment*
81	*Ignition electrode*
82	*Sensor electrode*
84	*Primary gas valve solenoid*
85	*Secondary gas valve solenoid*
90*	*Flue sampling point*
91*	*Air sampling point*
98	*On/Off/Reset switch*
114	*Low water pressure cut off switch*
132	*Flue gas deflector*
136	*Flow meter*
145	*Central heating pressure gauge*
157	*Domestic hot water temperature adjustment*
189	*Boiler shut down warning*
190	*Burner on indicator*

** For use with flue gas analysis equipment*

2.03 Boiler water flow diagram

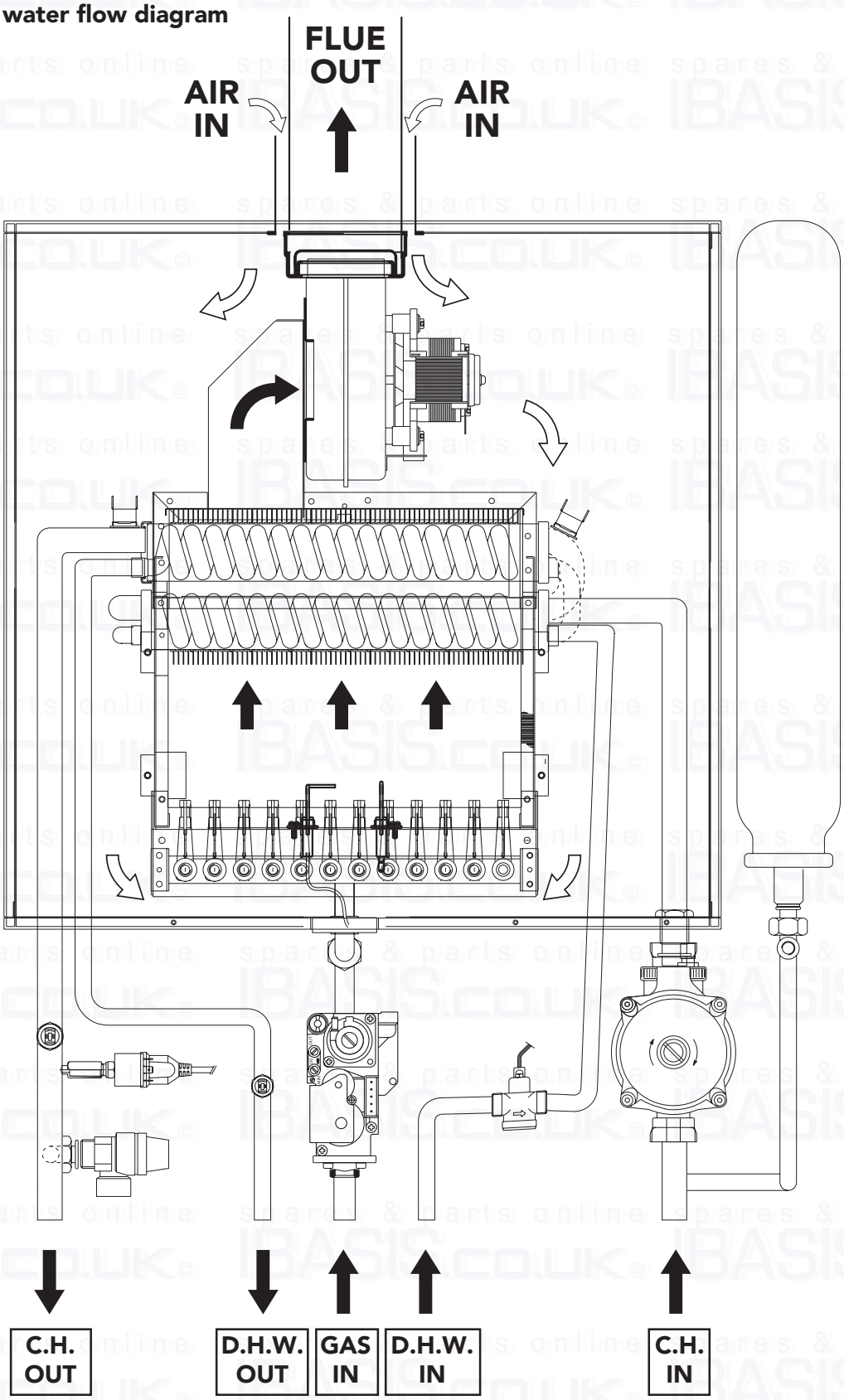

Fig. 3

IBASIS.CO.UK spares & parts online

2.04 Central heating adjustment (not normally required)

To adjust boiler heat input (thus also regulating heat output to the central heating water) simply adjust the main burner via the electronic control board (fig. 4 and 5).
The diagrams indicate the variation in heat output to the water as burner working pressure is varied.
Adjusting boiler output to the actual requirements of the central heating system will minimise boiler cycling thus saving fuel, varying the output has virtually no effect on the efficiency and combustion characteristics of the boiler.

Diagram of pressures and outputs with Natural gas

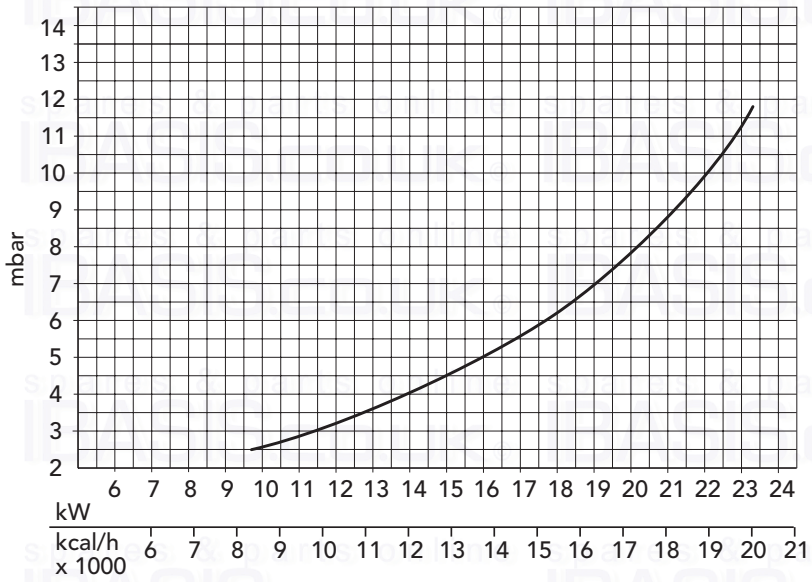

Fig. 4

Diagram of pressures and outputs with LPG (Propane)

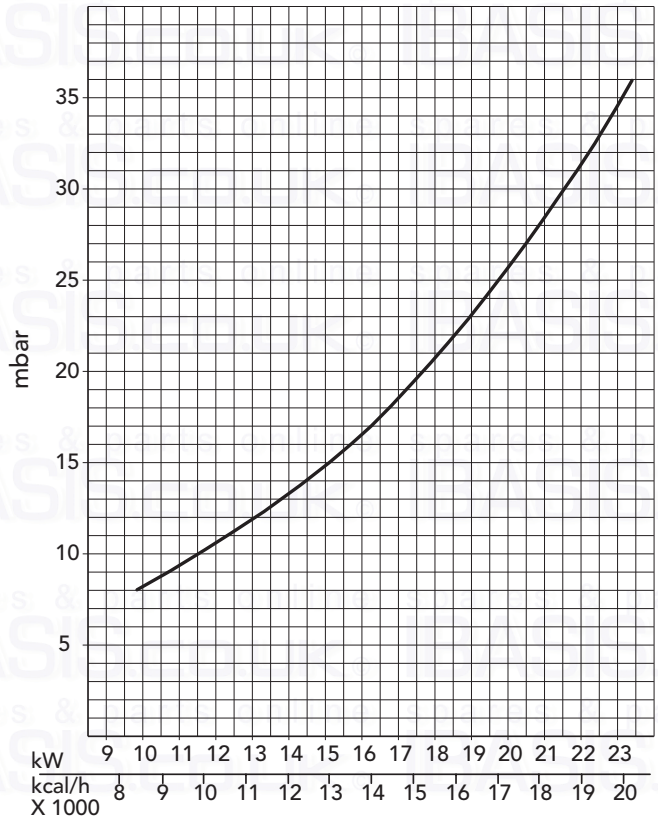

Fig. 5

2.05 Domestic hot water variability characteristics

The temperature of the domestic hot water can be varied from 40 to 55°C by adjusting the boiler potentiometer.

Diagram of domestic hot water production

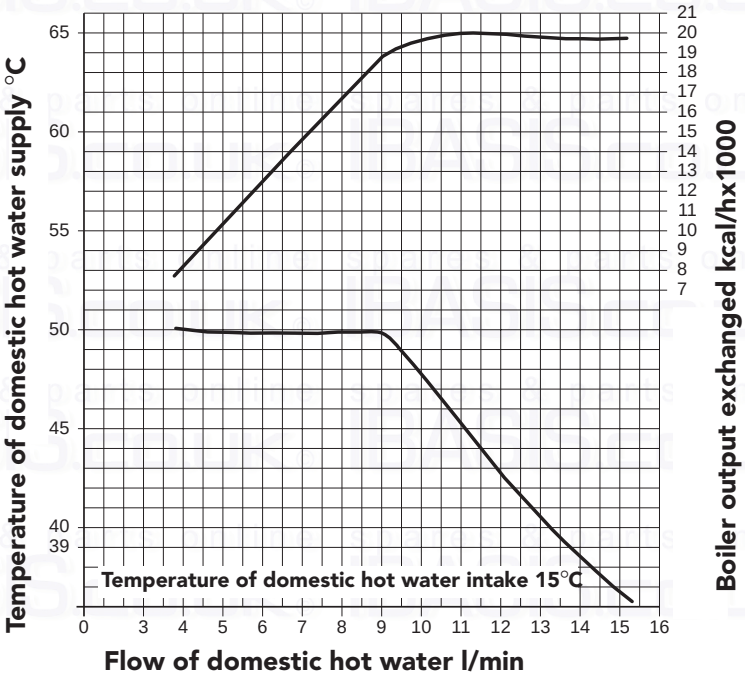

Fig. 6

2.06 Pump characteristics

The pump head available for circulating the water is given in fig. 7.

N.B. - The pump is factory set at position 3. The pump is a Grundfos type 15-50 UPS series.

Grundfos Pump per formance graph

Note - Minimum flow through boiler heat exchanger at any time should not fall below 6 litres per minute.

If the total volume of water in the system exceeds 40 litres an additional expansion vessel must be fitted to the central heating return pipe.

Pump performance curve Grundfos UPS 15-50

1 2 3 Speed settings
A Boilers pressure drop
B Available pump head C.H.

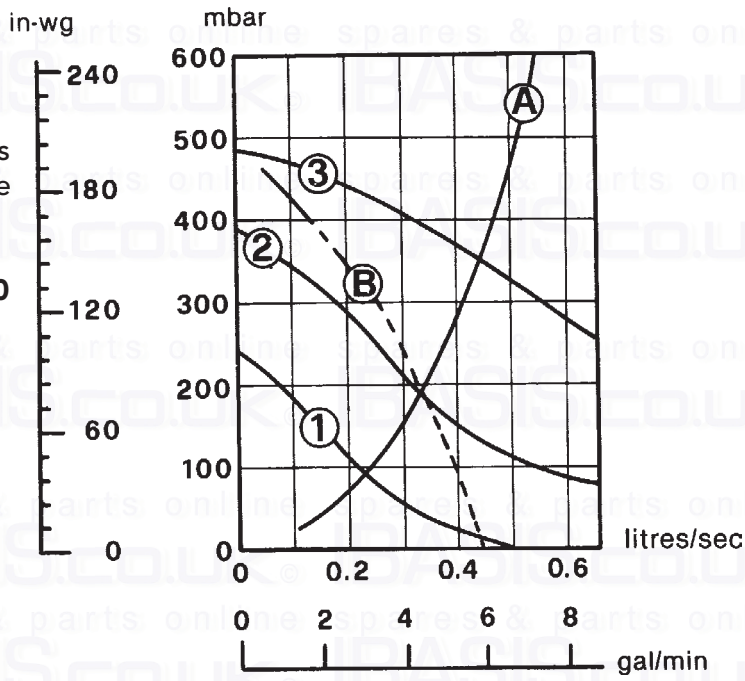

Fig. 7

SAFETY VALVE SETTING (bar)	3.0					
VESSEL CHARGE PRESSURE (bar)	0.5			1.0		1.5
INITIAL SYSTEM PRESSURE (bar)	1.0	1.5	2.0	1.5	2.0	2.0
TOTAL WATER CONTENT of SYSTEM	EXPANSION VESSEL VOLUME (litres)					
LITRES						
25	3.5	6.5	13.7	4.7	10.3	8.3
50	7.0	12.9	27.5	9.5	20.6	16.5
75	10.5	19.4	41.3	14.2	30.9	24.8
100	14.0	25.9	55.1	19.0	41.2	33.1
125	17.5	32.4	68.9	23.7	51.5	41.3
150	21.0	38.8	82.6	28.5	61.8	49.6
175	24.5	45.3	96.4	33.2	72.1	57.9
200	28.0	51.8	110.2	38.0	82.4	66.2
For syst. volumes other than those given above, mult. the syst. volume by the factor across	0.140	0.259	0.551	0.190	0.412	0.33

SIZING OF ADDITIONAL EXPANSION VESSELS:
Deduct from the value given in the table the 8 litre vessel supplied.

Note:

1. Fill C.H. installation to min. 1.5 bar.
2. Select the expansion vessel for a system pressure of 2.0 bar.
3. Expansion vessel must be fitted to central heating return pipe.
4. The standard 7 litre expansion vessel is charged to 1 bar.
5. The additional expansion vessel should be charged to 1 bar.

Pressure loss diagram

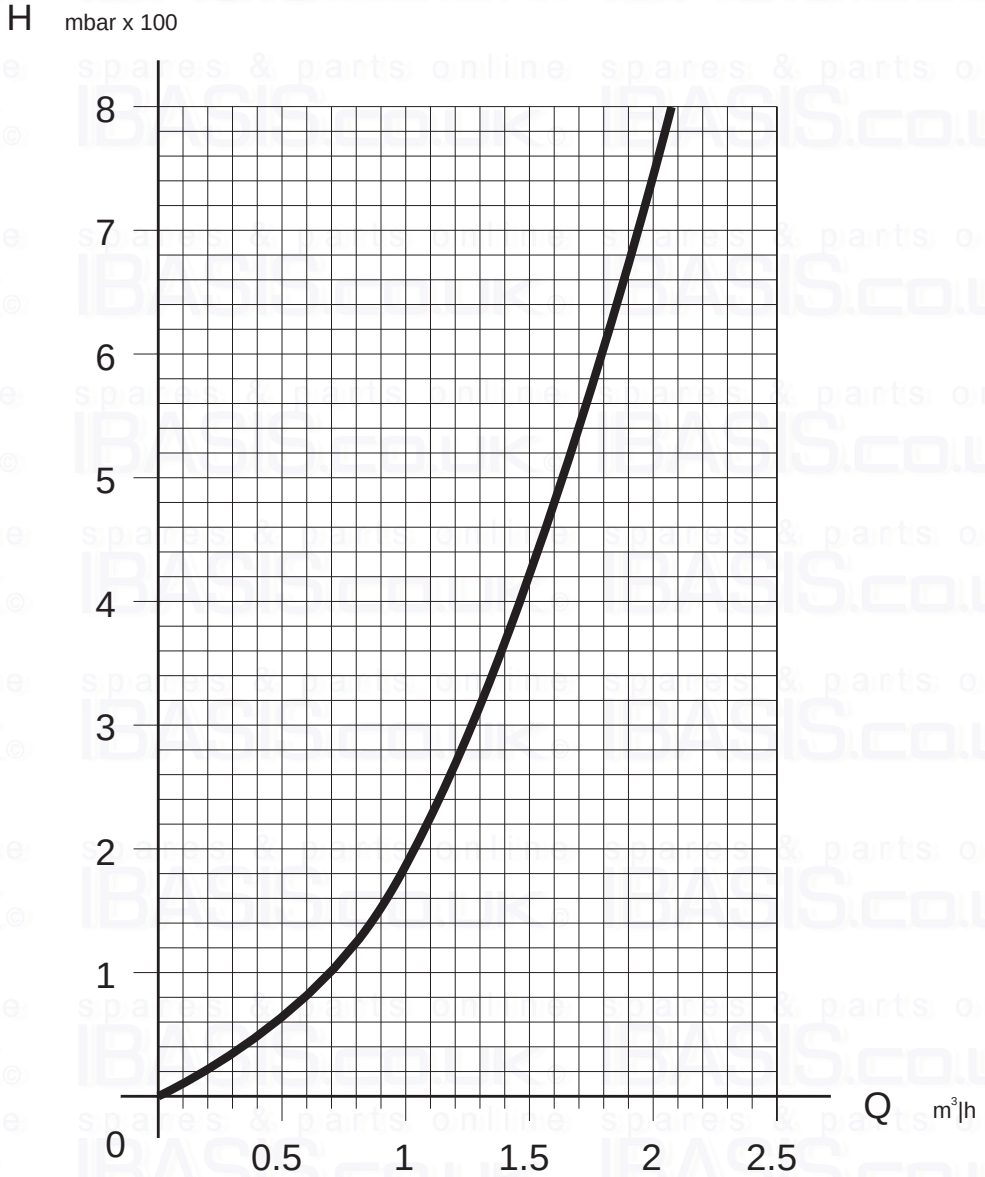

Fig. 8

3.0 INSTALLATION DETAILS

Gas Safety (Installation & Use) Regulations: 1996
In the interest of safety, **it is the law** that all gas appliances are installed by a competent person in accordance with the above Regulations, Building Regulations/Building Standards Scotland, Codes of Practice, current I.E.E. Regulations and the byelaws of the Local Water Undertaking. Failure to comply with the Regulations may lead to prosecution; it is your responsibility to ensure that the law is complied with.

N.B. For Northern Ireland the rules in force apply.

Important - If the boiler is to be fitted in a timber framed building it should be fitted in accordance with the Institute of Gas Engineers document IGE/UP/7. If in doubt advice should be sought from the Local Supplier.

Location of Boiler
The installation of the Domina 80E must be on a suitable non-combustible load bearing wall which will provide an adequate fixing for the boiler mounting bracket assembly. The location should be in an area where the water pipes will not be subjected to frost conditions. In siting the combination boiler the following limitations **must** be observed:

The combination boiler may be installed in any room or internal space, although particular attention is drawn to the requirements of the current I.E.E. wiring regulations and in Scotland the electrical provisions of the building regulations applicable in Scotland, with respect to the installation of the combination boiler in a room or internal space containing a bath or shower.

Where a room sealed appliance is installed in a room containing a bath or shower any electrical switch or appliance control utilising mains electricity must be situated so that it cannot be touched by a person using the bath or shower.

Air Supply
The room or compartment in which the boiler is installed does not require a purpose provided vent when using the standard concentric flue.

Flue System
The boiler allows the flue outlet to be taken from the rear of the boiler, from either side or vertically.
A standard flue length of 0.75 metres is provided. Alternative lengths of two or three metres can be supplied (equivalent to wall thicknesses of up to 565, 1815 and 2815mm for rear flues, deduct 91mm plus distance from side wall for side outlet flues). It is absolutely **essential**, to ensure that products of combustion discharging from the terminal cannot re-enter the building, or enter any adjacent building, through ventilations, windows, doors, natural air infiltration or forced ventilation/air conditioning.

Gas Supply
If necessary the local Gas supplier should be consulted, at the installation planning stage, in order to establish the availability of an adequate supply of gas.
An existing service pipe must **not** be used without prior consultation with the Local Gas supplier.
A gas meter can only be connected by the Local Gas supplier, or by a Local Gas suppliers Contractor.
Installation pipes should be fitted in accordance with BS6891-1988.
Appliance inlet working pressure must be 20mbar MINIMUM, for NG and 37 mbar minimum for LPG.
Pipework from the meter to the combination boiler must be of an adequate size.
The boiler requires 2.73m^3/h of natural gas, and 2,00 kg/h of LPG.
Do not use pipes of a smaller size than the combination boiler inlet gas connection.
The complete installation must be tested for gas soundness and purged as described in BS6981-1988. All pipework must be adequately supported. An isolating gas valve is provided and should be fitted on the boiler gas inlet. Please wait 10 minutes when lighting from cold before checking gas rate. Gas pressures should be checked after the boiler has operated for 10 minutes to reach thermal equilibrium.

Water System

Note - the boiler is designed for sealed systems only and must NOT be used on open vented systems.

Central Heating

Detailed recommendations are given in BS6798, BS5449, BS6700 and CP342 Part 2. Pipework not forming part of the useful heating surface should be insulated to prevent any heat losses or possible freezing (i.e. in roof spaces or ventilated underfloor spaces). Drain taps should be positioned at the lowest point of the system in accessible locations to permit the whole system to be drained down. The drain taps should be in accordance with BS2879. Copper tubing to BS2871, Part 1 is recommended for water carrying pipework. Pipework in horizontal runs should have a gradient where possible to facilitate the removal of air. Ensure that the boiler heat exchanger is not a natural point for air collection. A typical heating system with domestic hot water circuit is illustrated in fig. 9.

Important - If thermostatic radiator vales are fitted **a bypass must be fitted to ensure a minimum flow rate through the boiler of 6 l/min**. The bypass should be fitted as far as possible from the boiler.

Make Up Water

Provision must be made for replacing water lost from the sealed system. Reference should be made to BS6798, for methods of filling and making up sealed systems. There must be no direct connection between the boiler's central heating system and the mains water supply. The use of mains water to charge and pressurise the system directly, is conditional upon the Local Water Byelaws. Again any such connection must be disconnected after use. A typical temporary filling loop is shown in fig. 10.

Domestic Hot Water

Always fit a scale reducer in "hard water areas" (18 clarke degrees or over)". A 15mm copper connection point on the boiler for attaching to the main supply is provided. The maximum domestic water pressure for the inlet supply is 10 bar (145 P.S.I.). **If the cold mains supply exceeds 5 bar (72 P.S.I.), a water governor or pressure reducing valve must be fitted** by the installer into the mains supply in an inconspicuous but accessible position preferable between 3 and 5 metres (10-16ft) before the appliance. Such a valve must be approved by the Water Research Council.

Attention - is drawn to the Model Water Byelaws.

Fittings manufactured from duplex (alpha-beta) brass are not acceptable for underground use and certain water undertakings will not accept their use above ground.

Ensure all pipework is adequately supported

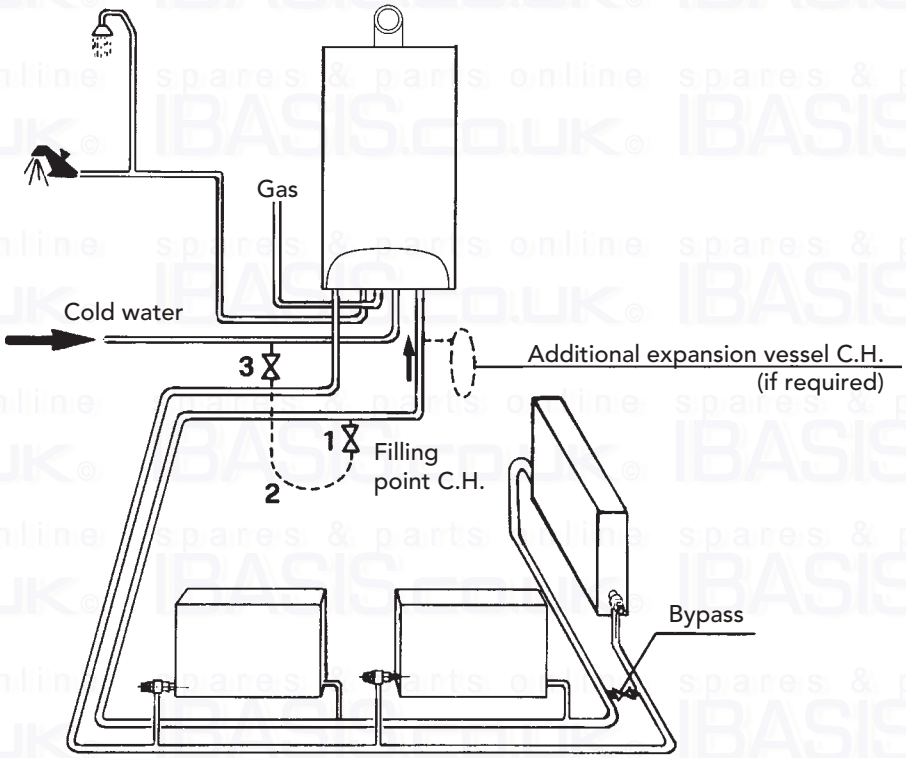

Fig. 9

NOTE: A bypass that will ensure a minimum flow rate of 6 l/min. at all all time must be fitted as far as possible from the boiler if thermostatic radiator valves are fitted thoughout.

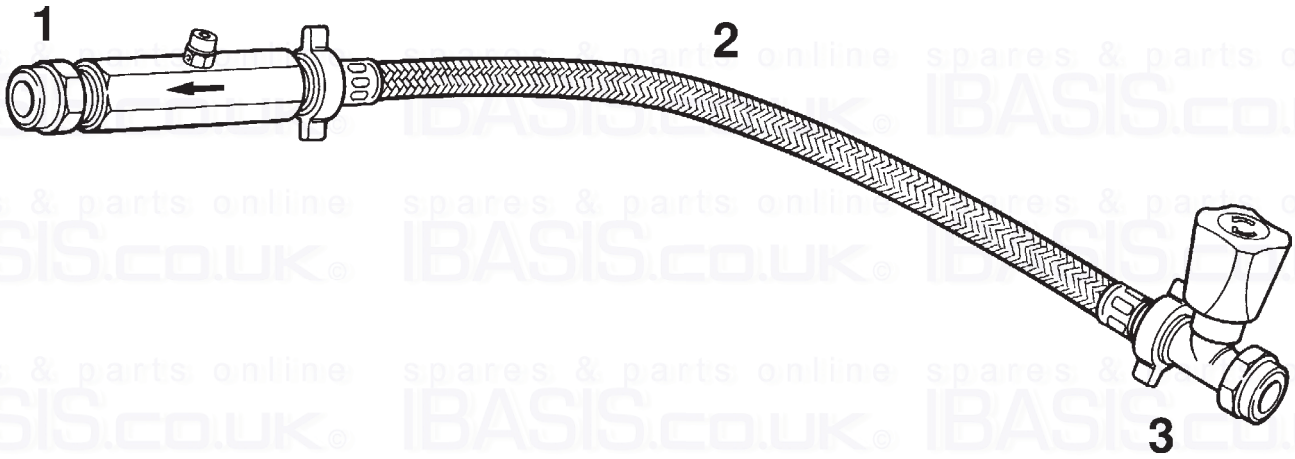

Key

1. Filling point C.H.
2. Temporary connection
3. Cold water supply

Fig. 10

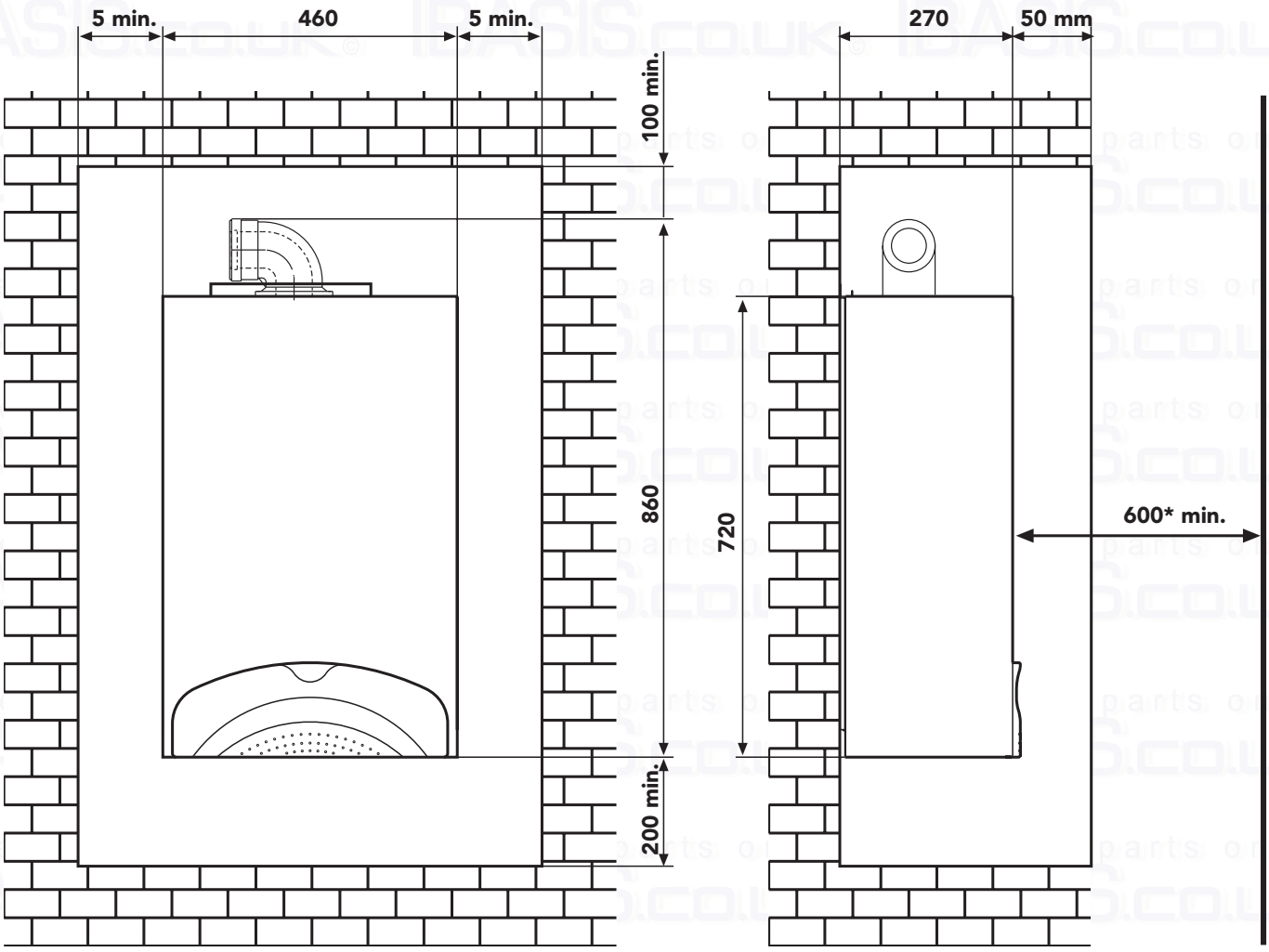

Fig. 11

CLEARANCES:

* 600mm minimum clearance for servicing access

Top clearance only applies to 100Ø concentric flue system

Terminal Position

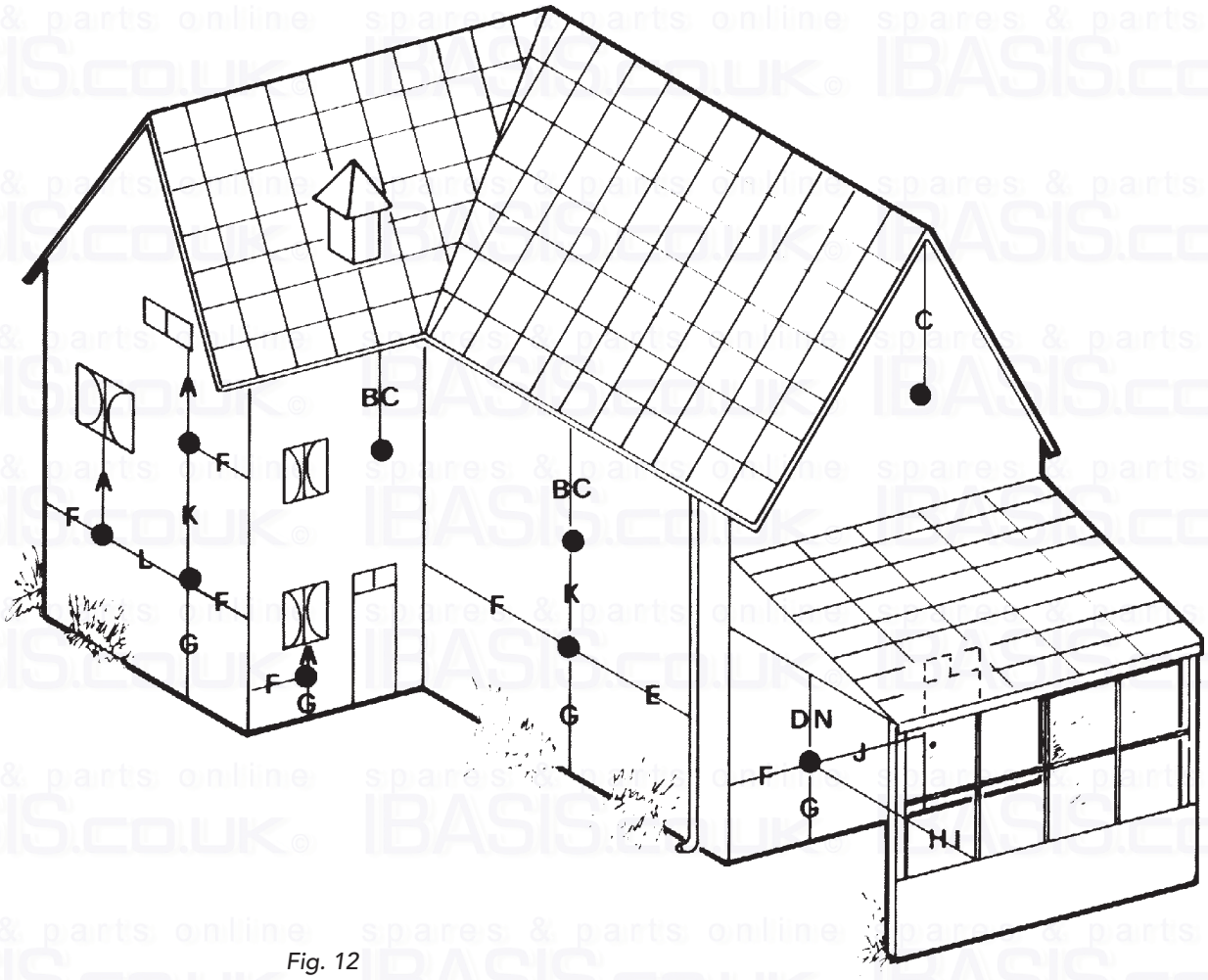

Fig. 12

POSITION	MINIMUM SPACING	mm
A	Directly below an openable window, air vent, or any other ventilation opening	300
B	Below gutters, soil pipes or drainpipes	75
C	Below Eaves	100
D	Below a Balcony	100
E	From vertical drainpipes or soilpipes	75
F	From internal or external corners	100
G	Above adjacent ground or balcony level	100
H	From a surface facing the terminal	600
I	Facing another terminal	1,200
J	From opening (door/window) in carport into dwelling	1,200
K	Vertically from a terminal on the same wall	300
L	Horizontally from a terminal on the same wall	300
N	Below carport	600

A Quinnel Barrat and Quinnel guard (part. No. C2) should be screwed to the wall centrally over the terminal, when the terminal height is less than 2 m from floor level.

3.01 Boiler Mounting Plate

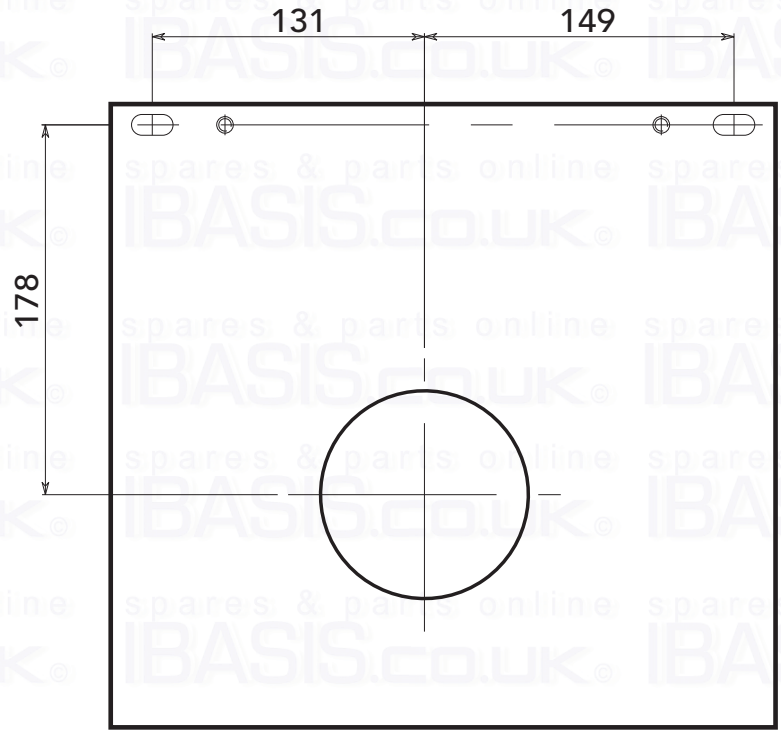

Fig. 13

3.02 Drilling Template (Standard Rear Flue Application)

Select suitable mounting position for boiler, using the template or mounting plate mark flue outlet and boiler mounting points. Drill two 10mm holes 70mm deep to accept the wall plugs, fit wall plugs. Using a core drill cut a 118mm diameter hole for the flue.

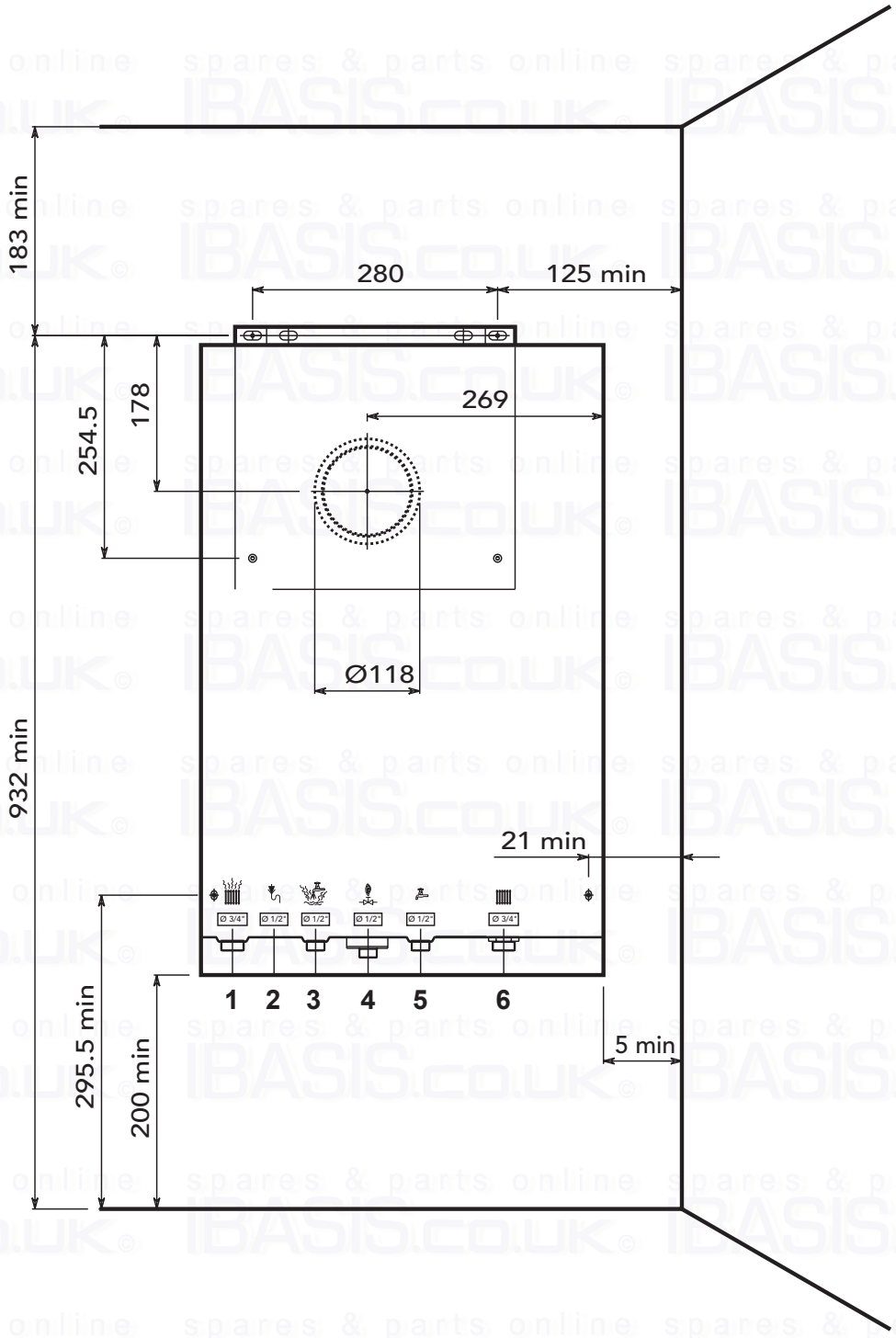

1. *CH flow*
2. *Safety Valve*
3. *Domestic hot water outlet*
4. *Gas supply*
5. *Domestic hot water inlet*
6. *CH return*

Fig. 14

3.03 Drilling Template (Top Flue Application)

Select suitable mounting position for boiler, using the template mark flue outlet and boiler mounting points. Drill two 10mm holes 70mm deep to accept the wall plugs, fit wall plugs. Using a core drill cut a 118mm diameter hole for the flue.

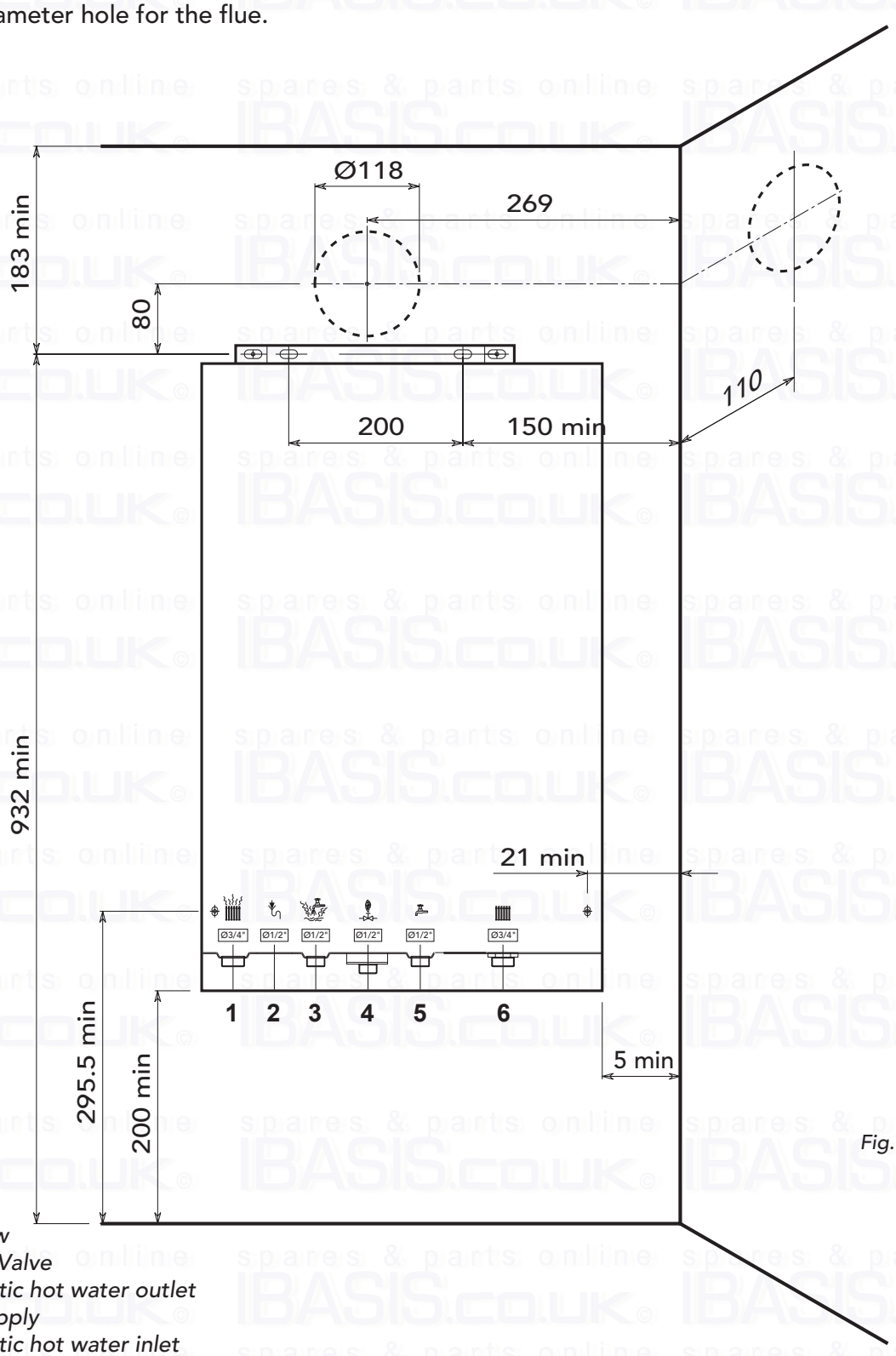

Fig. 15

1. *CH flow*
2. *Safety Valve*
3. *Domestic hot water outlet*
4. *Gas supply*
5. *Domestic hot water inlet*
6. *CH return*

3.04 Back flue outlet (Diagram 1-9)

1. Core drill 127mm hole (5").

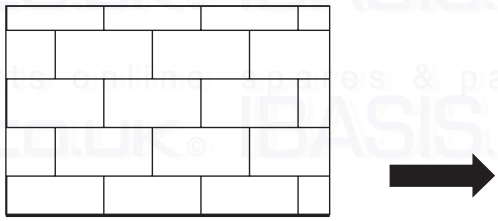

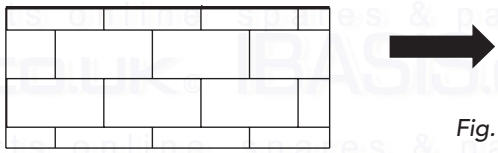

Fig. 16a

2. Push through the outer flue.

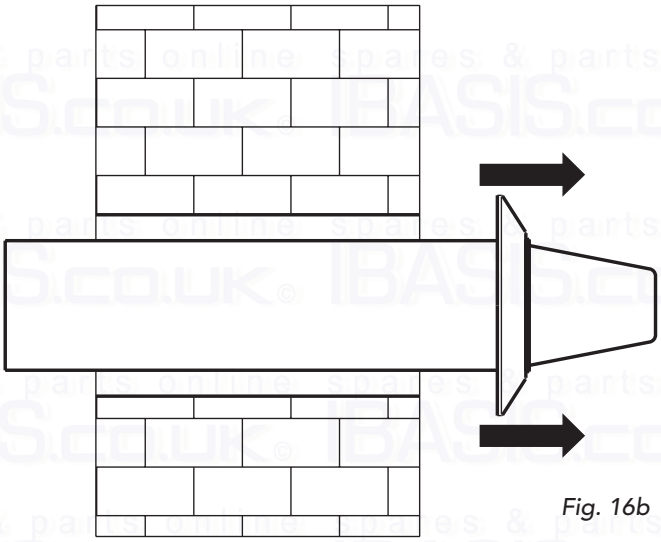

Fig. 16b

3. Gently pull back until wall seal is flush with the wall.

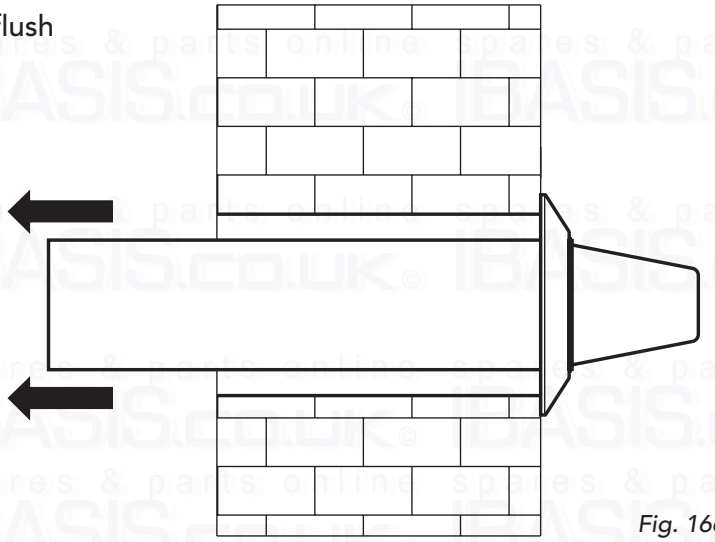

Fig. 16c

4. Place wall plate on outer flue ensuring it is level. Mark and drill four holes, two top, for expanding bolts and two bottom for plugs and screws. Fix plate to wall with the square gasket between the wall and the plate use the large diameter washers for the bolts and screws.

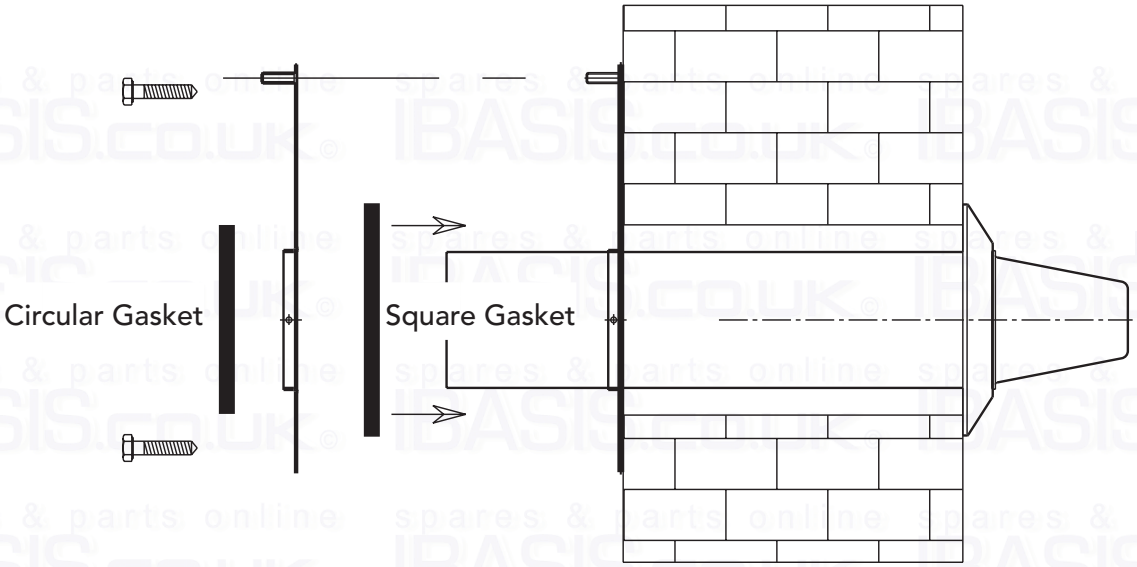

Fig. 16d

5. Through plate into air tube, drill two holes and fix in place using two self tapping screws M4 x 6mm long.

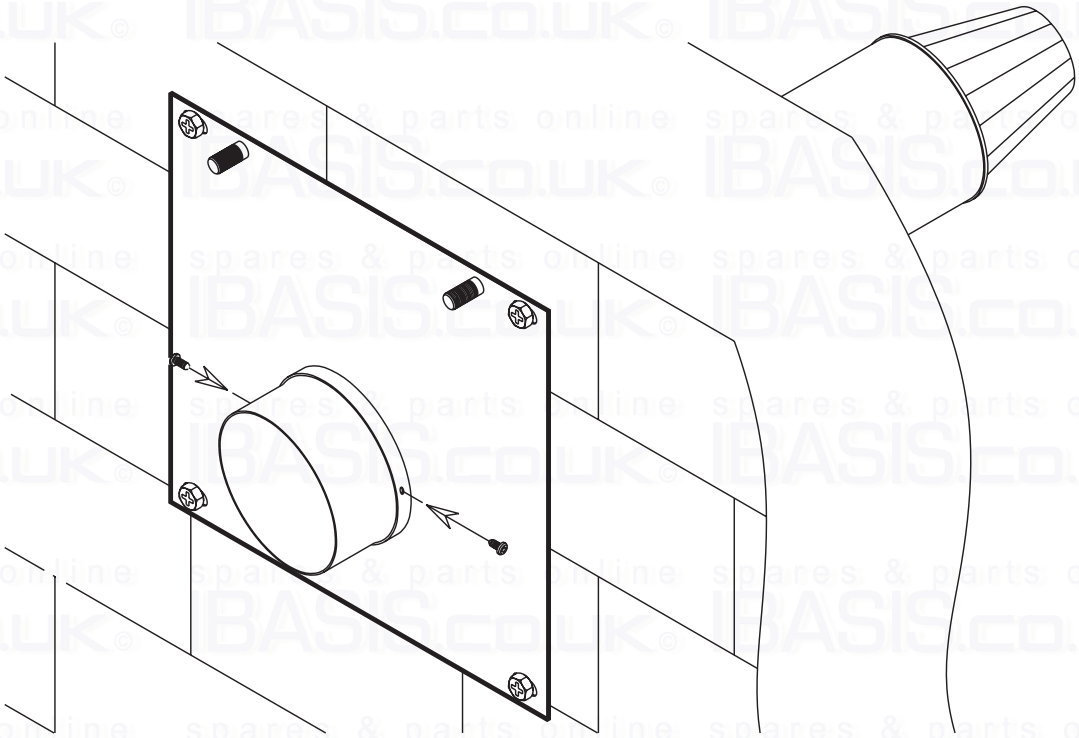

Fig. 16e

6. Cut the outer flue flush with the flange on the hanging plate.

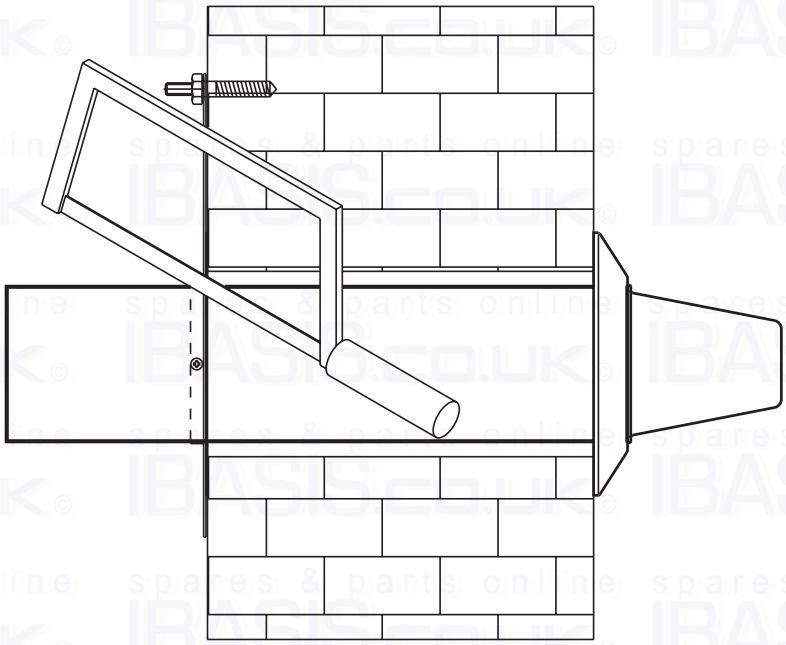

Fig. 16f

7. Insert the aluminium flue pipe into white plastic outer flue, making sure the aluminium pipe sits fully and centrally into the flue terminal. Mark the aluminium flue pipe at the point it is flush with the mounting plate. Add 36mm to this mark and cut the aluminium inner flue pipe at this point.

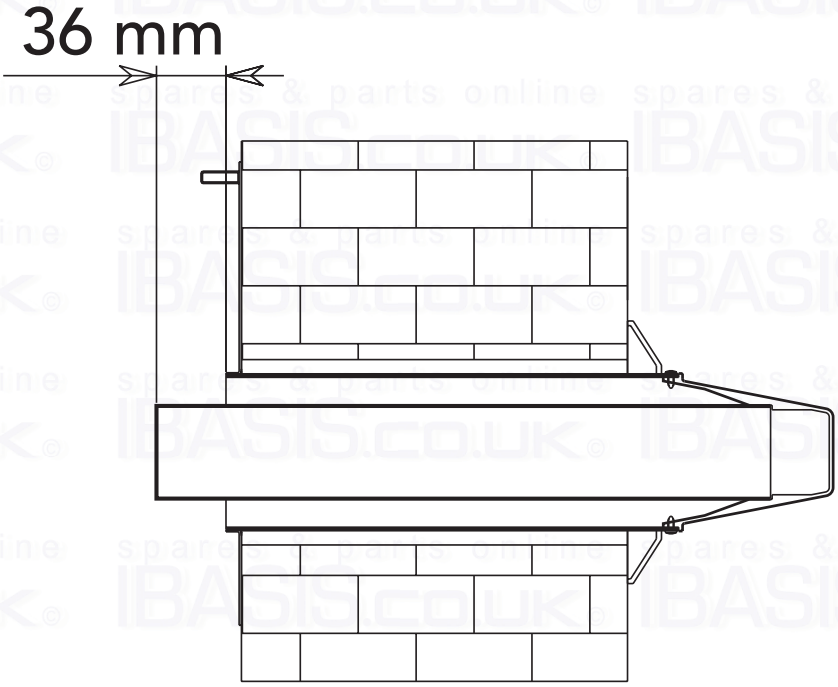

Fig. 16g

8. Install the inner metal flue into the outlet, up to the wallplate flange mark.

9. Lift boiler with flue in place, engage inner and outer flue, slide into position

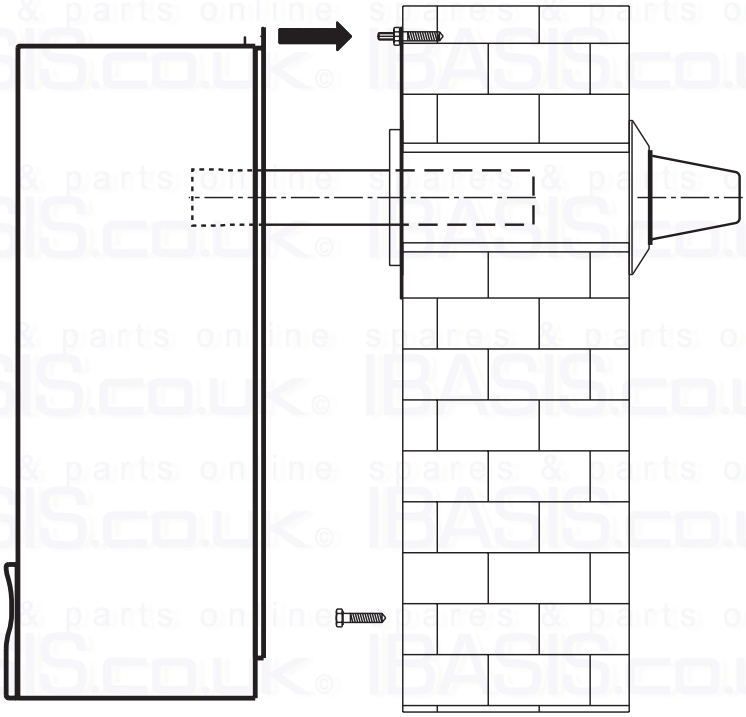

Fig. 16h

9. Make sure the inner flue is fully engaged in the flue terminal, secure boiler with two nuts and washers, sevure bottom of boiler using two screws and washers.

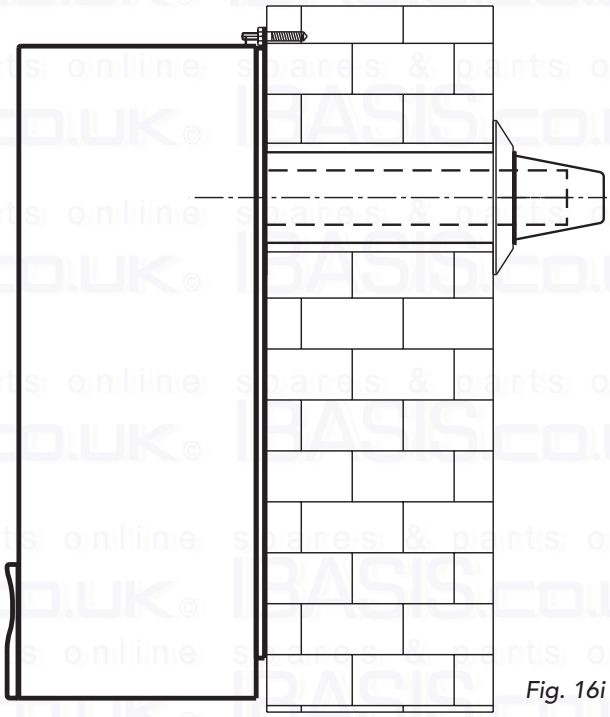

Fig. 16i

3.05 Domina top outlet flue conversion

Remove fan by pulling off electrical connections. Pull off air pressure switch tubes from the air pressure switch remove 2 screws b. Rotate the fan upward to disengage it from the securing pin a.

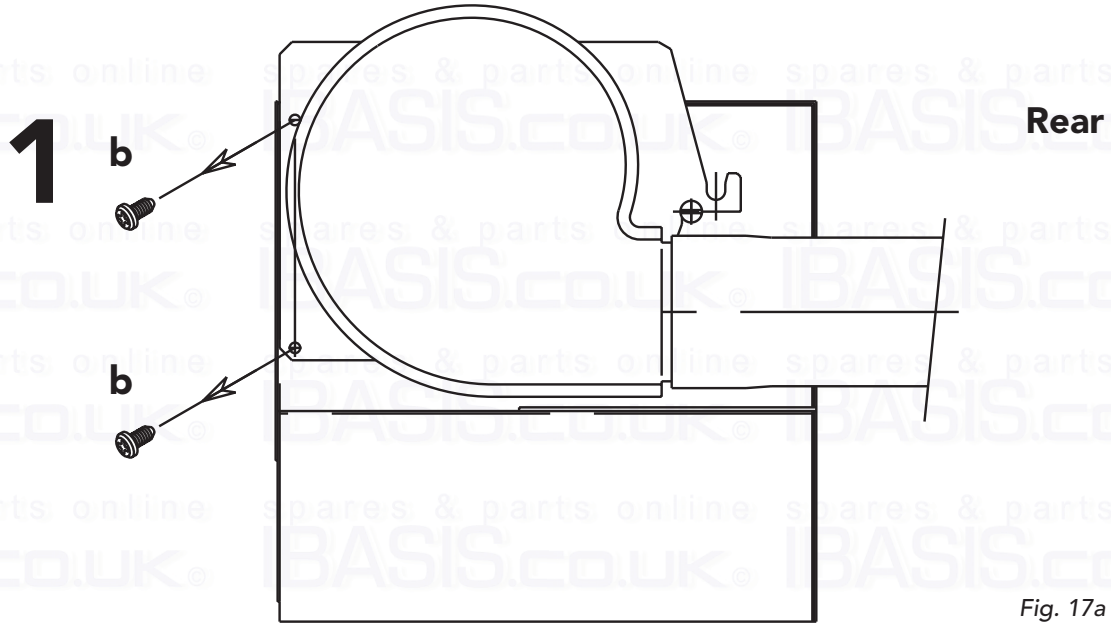

Fig. 17a

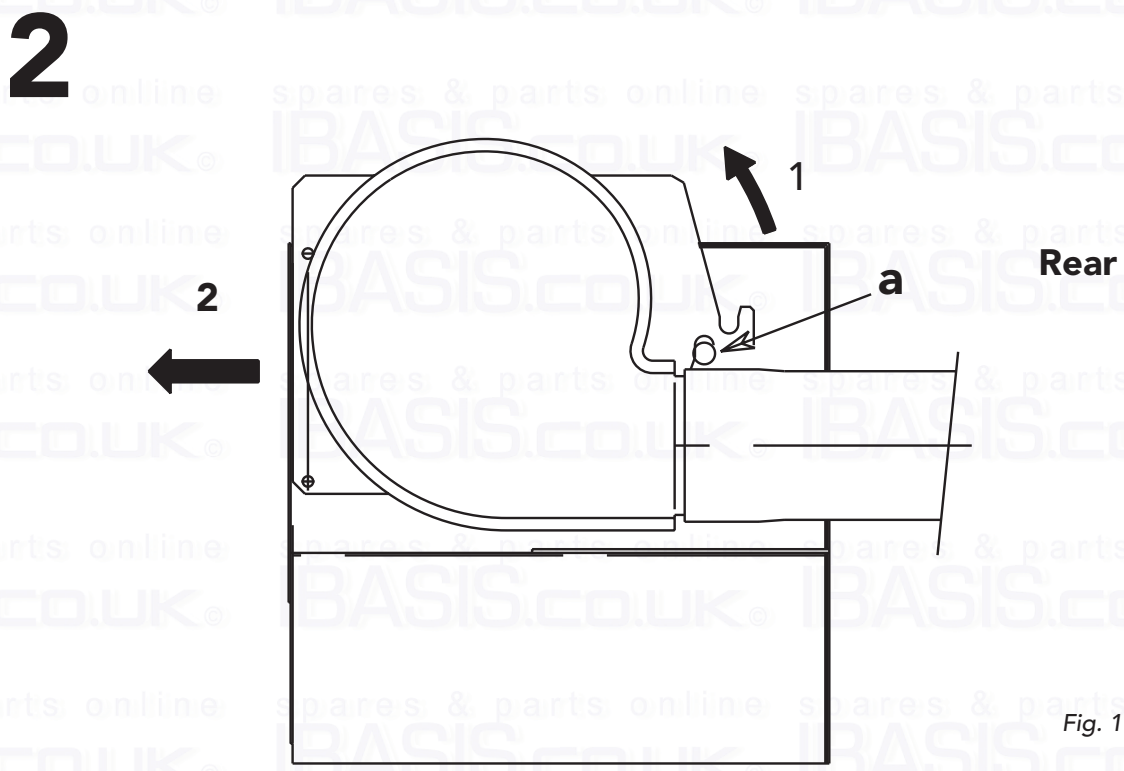

Fig. 17b

Remove the securing screw that locates the fan nozzle extension to the fan and remove the nozzle extension and jointing mastic (this is not required for top outlet flueing).

Take off the four screws which fix the top sealed chamber cover, remove the cover and gasket. Rotate the cover and gasket through 90° and fit it to the rear of the boiler to cover the original flue outlet. Secure them both in place with the four screws removed previously.

3

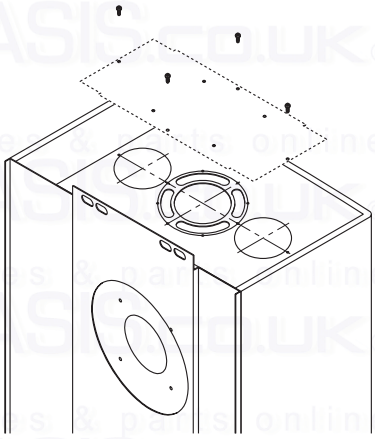

Fig. 17c

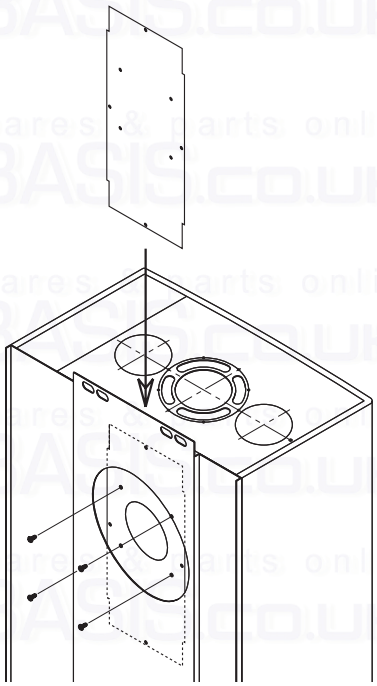

Fig. 17d

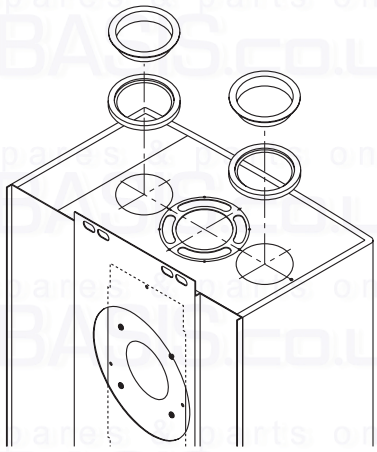

Fig. 17e

Remove fan mounting plate by undoing the three fixing screws c. Rotate the fan through 90° so that the fan nozzle points upward. Secure the fan to the plate in the new position using screws in position d.

4

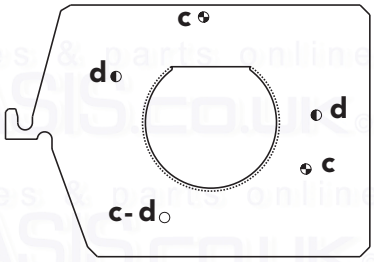

Fig. 17f

○ Common

◐ For upper outlet

◕ For rear outlet

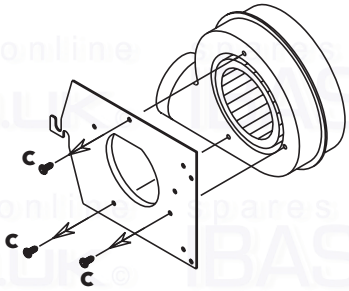

Fig. 17g

For rear outlet

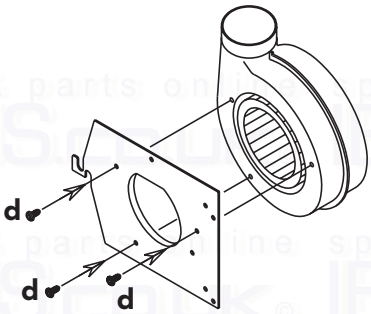

Fig. 17h

For upper outlet

6

Fit the connector e to the fan nozzle
Ensure the seals are in place

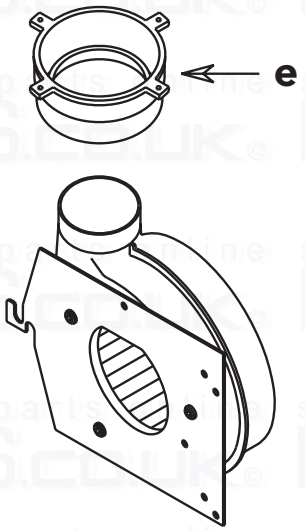

Fig. 17i

7

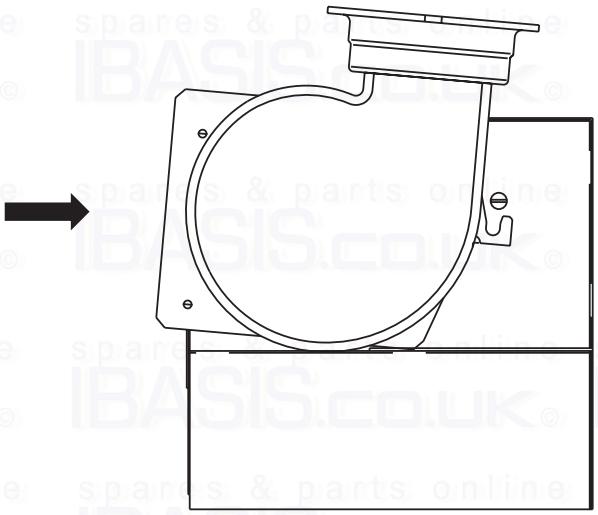

Fig. 17l

8

Fix with the screws (b)

refit wiring connections to fan and air pressure switch tubes ensuring correct orientation. I.E. red tube to air pressure switch connection with red dot (+) and clear tube to air pressure switch connection with no paint marking (-).

Fit the fan into the boiler rotating the front upwards to engage with the pin a.
Secure with the screws b.

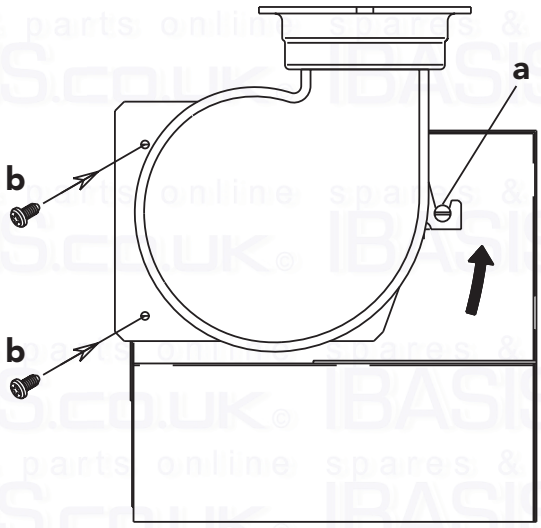

Fig. 17h

9

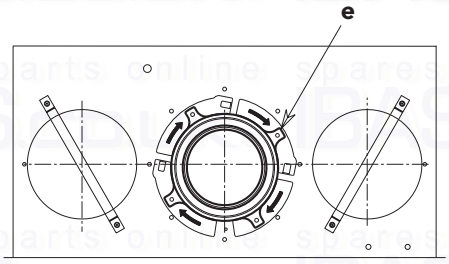

Fig. 17o

10

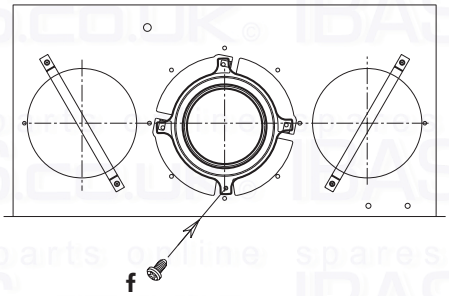

Fig. 17p

Rotate the fan connector e until it locates into the stop then secure it with the screw f.

11

SIDE CONCENTRIC OUTLET

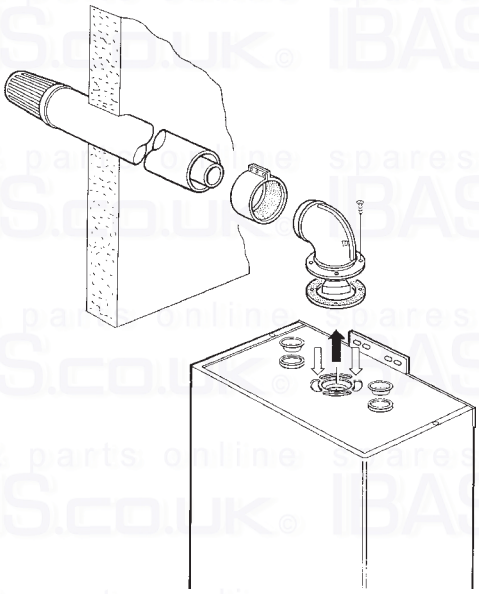

Fig. 17q

12

VERTICAL CONCENTRIC OUTLET

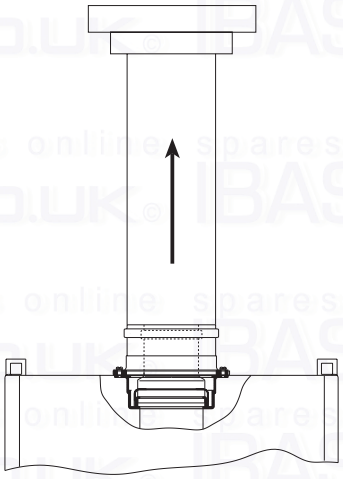

Fig. 17r

3.06 Restrictor

For boiler operation, the restrictor supplied with the unit must be mounted following the instructions below.
Determine the correct size of flue restrictor required. Before inserting the flue gas duct in the boiler, check that the restrictor fitted is correct and that it is correctly positioned (see fig. 18).

N.B.: the diameter of the hole is stamped on the restrictor

Boiler is fitted with Ø45 restrictor as standard

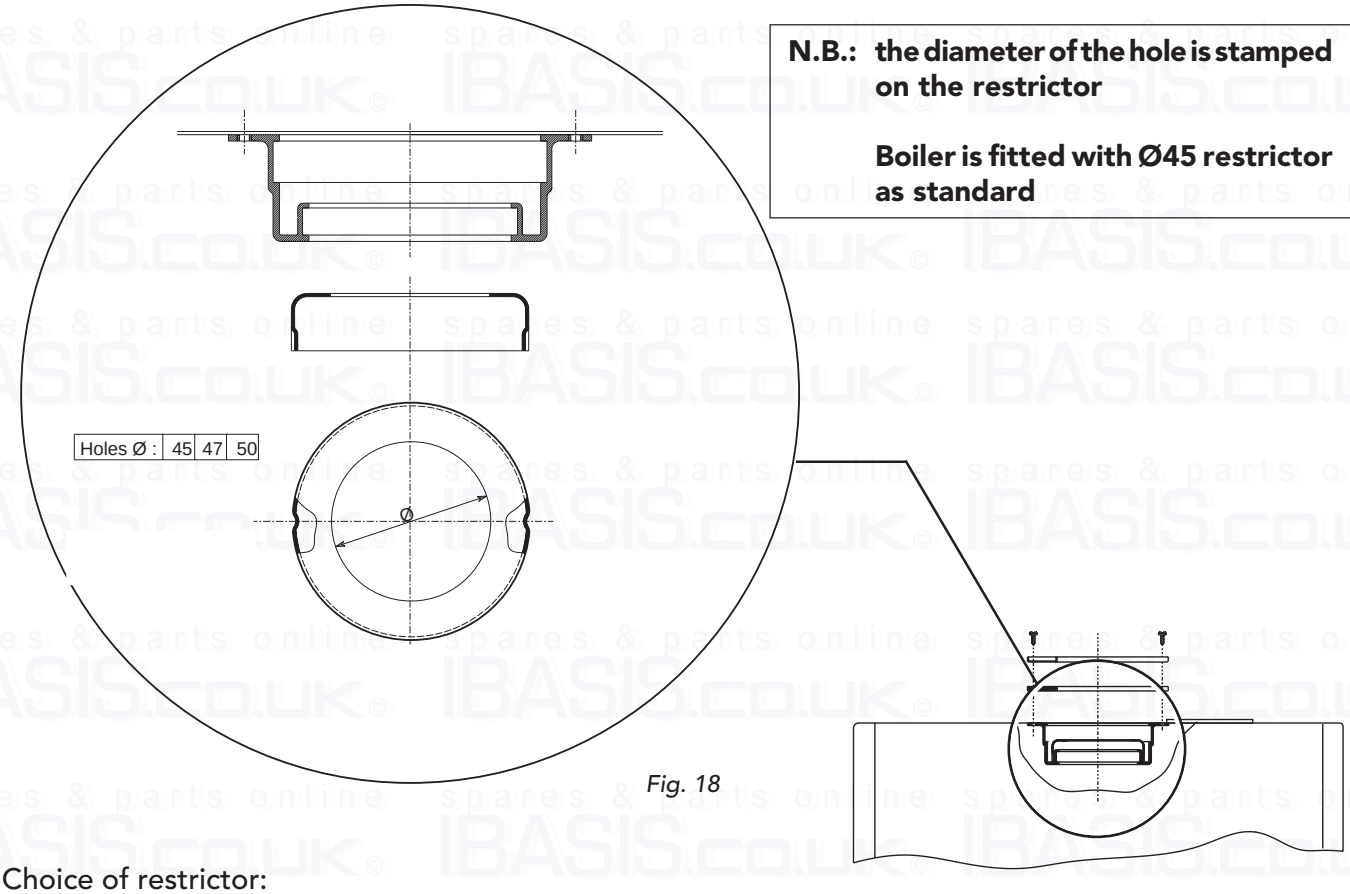

Fig. 18

Choice of restrictor:

- With **concentric pipes**: - up to 1m long + one bend, use the 50 mm restrictor.
  - for flue lengths over 1 meter, use no restrictor.
- With **separate pipes:** - Calculate the total flow resistance of the air and flue pipes in metres (cap. 3.08.2)
  - utilise the table shown above to choose the more suitable restrictor for the flow resistance calculated

RESTRICTOR FOR TWO PIPE SYSTEM ON DOMINA 80E		
Total flow resistance of flue system		**Use restrictor size**
minimum	maximum	mm
0 m	13 m	45
13 m	23 m	47
23 m	38 m	50
38 m	48 m	no restrictor

3.07 Top Outlet Concentric Flue Connection

3.07.1 Vertical concentric connection

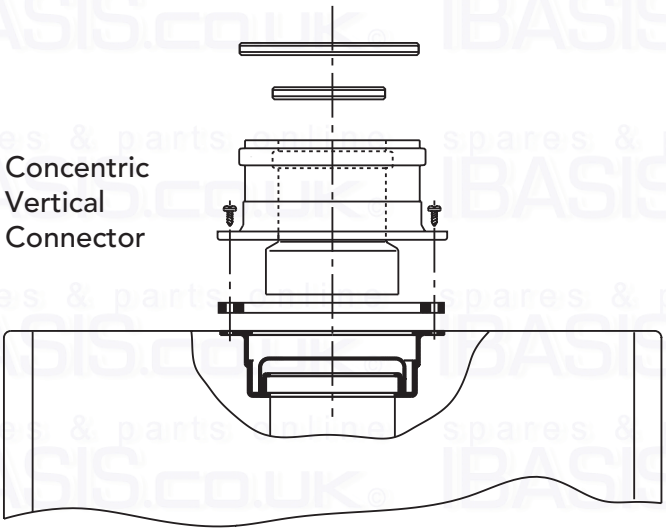

A vertical connector can be supplied for vertical discharge with concentric pipes.
The simple mounting and use of double lip gaskets at the joints makes this an extremely easy and safe option.
For flue length up to 1 m long the 50 mmØ restrictor is required. Longer than this no restrictor is required.

Fig. 19

3.07.2 Horizontal concentric connection

A 90° bend (fig. 20) can be supplied for the horizontal connection of air and flue gas pipes. This can be oriented towards the chosen wall in degrees of 45°.

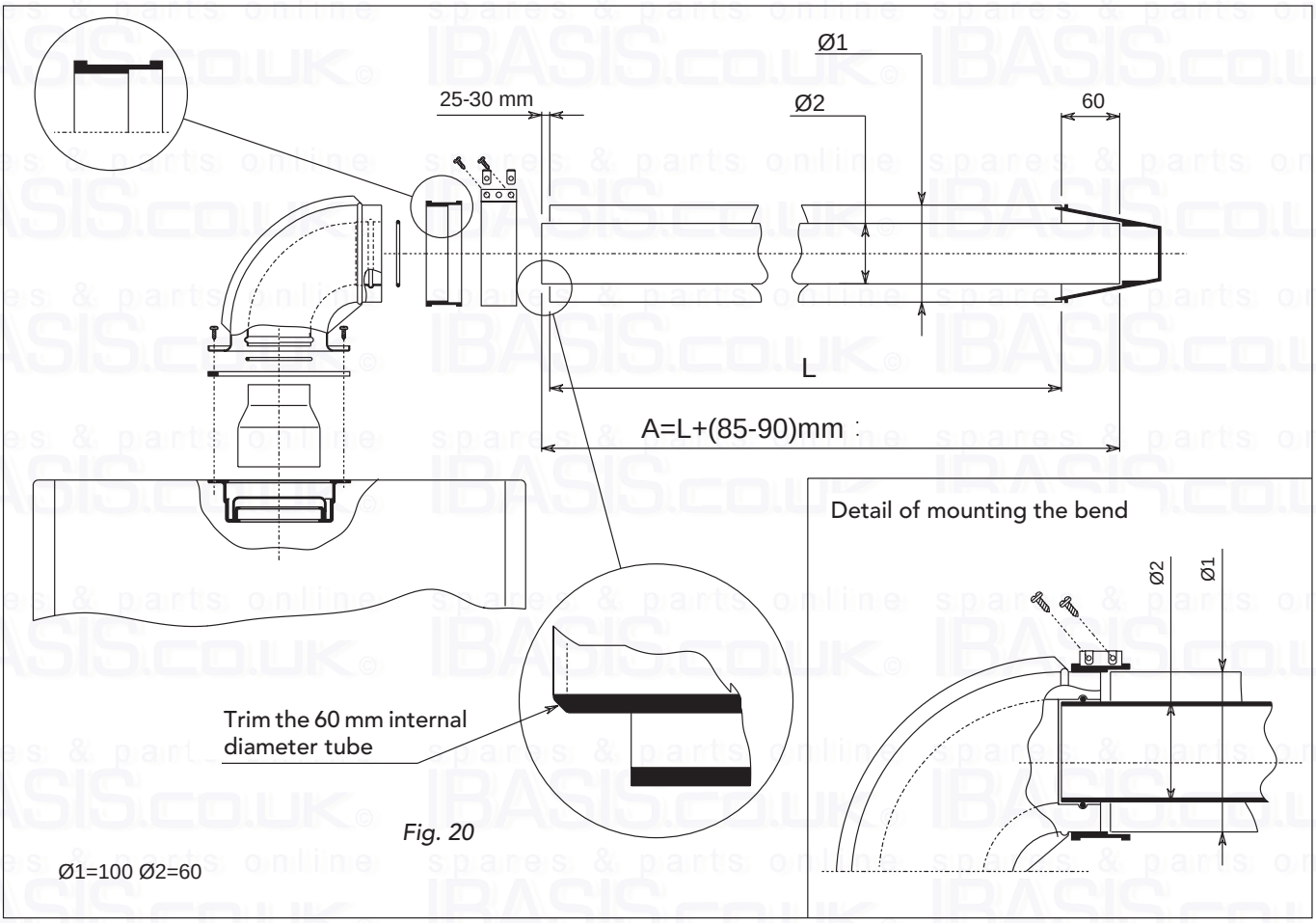

Fig. 20

Notes on concentric horizontal installation

To locate the centre of the hole for passing the pipes through the wall, refer to fig. 15. Bear in mind that the two concentric pipes must slope downwards away from the boiler at a rate of about 3 mm/m to avoid rainwater entering the boiler. The concentric pipes making up the air - flue gas duct must be sealed with the gasket where they join the boiler (fig. 21). Outside, the pipes should protrude from the wall between 10 and 60 mm (fig. 21).

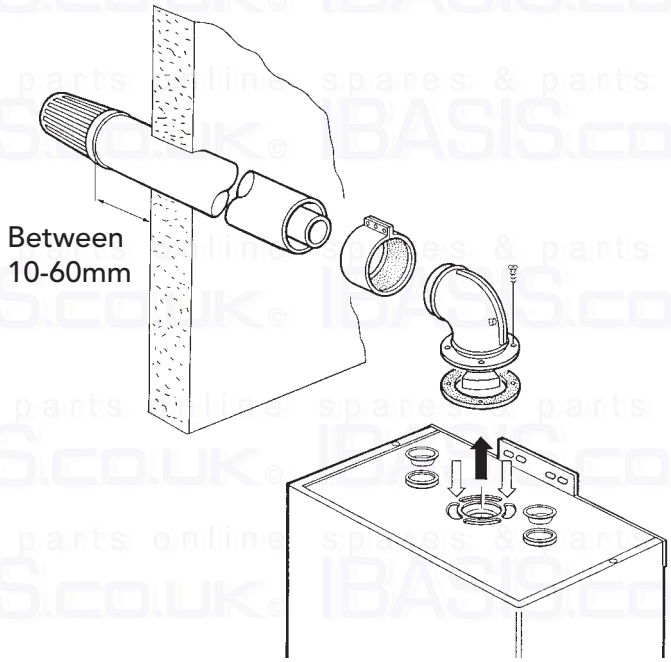

Fig. 21

3.07.3 Maximum concentric flue length

First table below shows the maximum flue lengths available for boilers with concentric systems.
For correct calculation remember to include the reduction for bend and flue terminals listed on second table. Please refer to 3.06 for use of restrictor

Maximum flue lenght permissible	100 mm concentric		125 mm concentric	
	Vertical	Horizontal*	Vertical	Horizontal*
Domina 80E	4 m	3 m	5 m	5 m

***For horizontal Flueing the reduction for appliance bend or turret are already included.**

Reduction for bend and roof terminals	
100 mm concentric bend 90°	1 m
100 mm concentric bend 45°	0,5 m
125 mm concentric bend 90°	0,5 m
125 concentric bend 45°	0,25 m

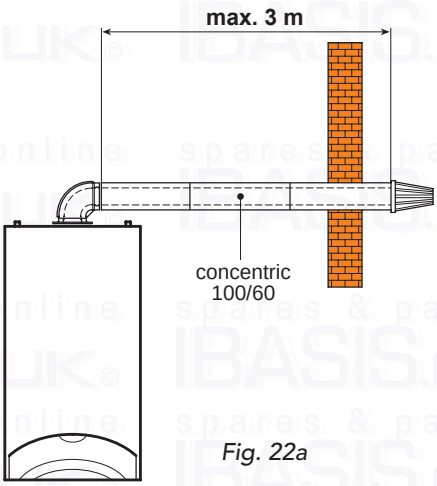

Fig. 22a

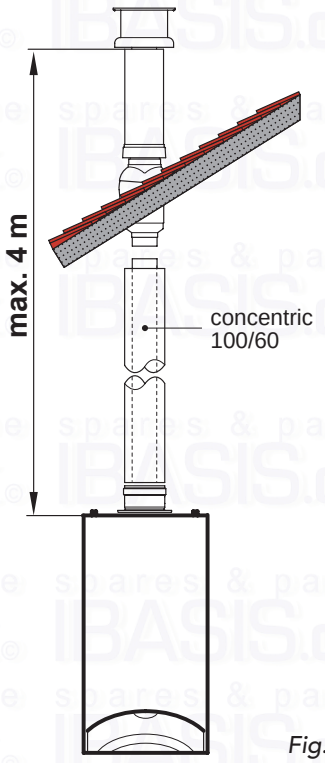

Fig. 22b

3.08 Top Outlet: Two Pipe Flue System

3.08.1 Two pipe connection

Two separate ducts Ø80 for air intake and flue gas discharge can be directly connected to the boiler. After conversion for top outlet (see 3.05) mount the separate outlet kit ①

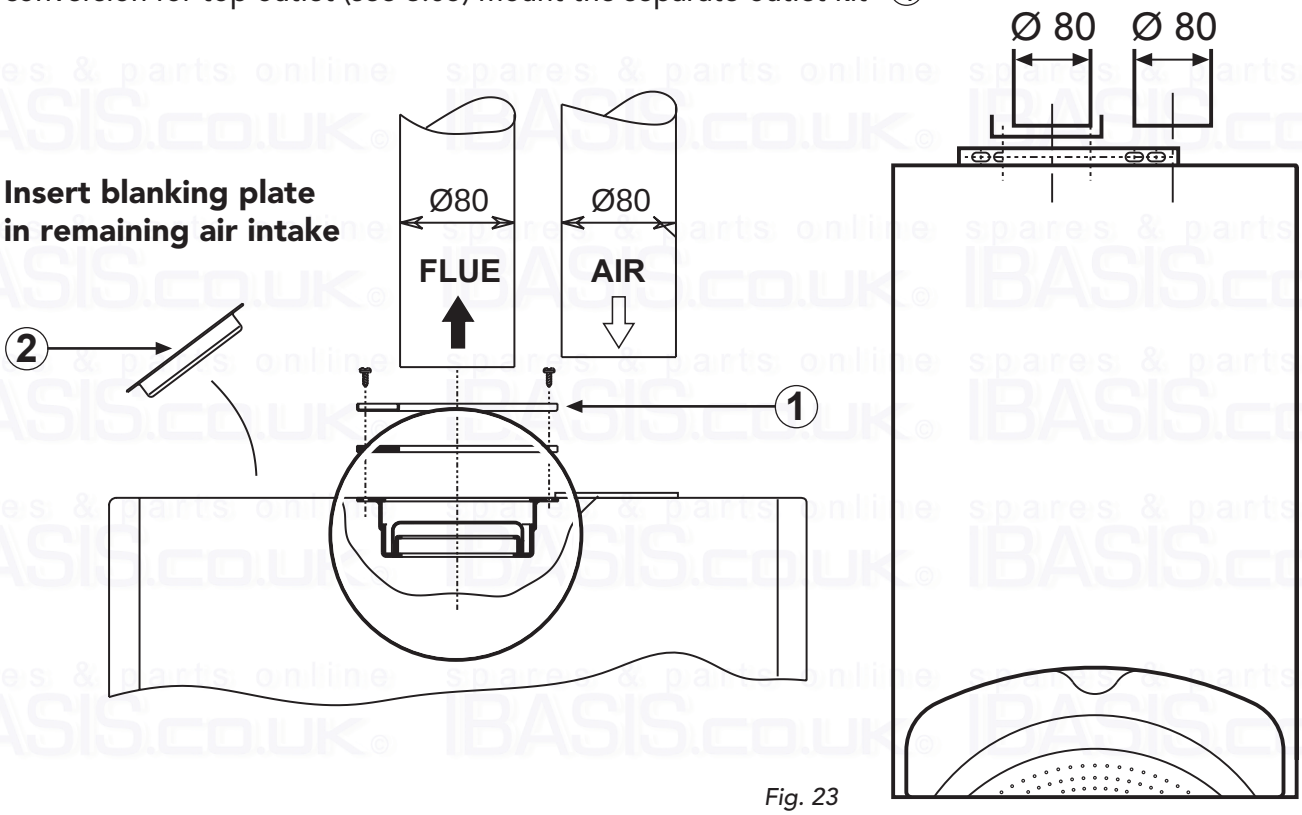

Fig. 23

Connect flue duct to central hole Ø80 and air duct to left or right air intake hole Ø80. Insert blanking plate ② in remaining air intake.

A wide number of accessories for two pipe systems are available from Ferroli (ref. to page 32-33). Before installing your system please check via calculation table at 3.08.2 you are not exceeding the maximum permissible length for the appliance.

Notes on two pipe system installation:

When using the two pipe system the flue discharge pipe must have a 25mm air gap when passing through combustible materials.
Where the flue discharge pipe passes through the airing space of an airing cupboard it must be protected by a non combustible guard or expanded metal giving an annular air gap of at least 25mm.
Where the flue discharge pipe passes through a wall containing cavity insulation, a non combustible sleeve must be fitted. Additionally a gap of 25mm between the sleeve and the insulation should be provided by cutting back the insulation or packing loose fill bead insulation with mineral fibre.
Where the flue pipe is run through an unheated roof space it should be insulated with non combustible insulating material to prevent condensation.
The flue pipe should be supported at intervals of not more than 1.8m and the support should be preferably below a joint.

3.08.2 Two pipe flue system

• Calculating maximum permissible flue length.

The calculation method is based on a standard reference parameter (1 metre of horizontal air flue 80 diameter 80) for the maximum length permissible for all the pipes + fittings flow resistance coefficient. In other words, for all components and pipes in the different installation configurations (vertical or horizontal, air or flue, etc.) and for all the fittings, a flow resistance (reduction) equivalent to ***x*** metre of horizontal air induction pipe is indicated. For every boiler model a maximum pipe length is provided, expressed in ***n*** metres of horizontal air pipe.
In this way, to calculate the length of a proposed 2 pipe air-flue system, add the flow resistance (reduction) in equivalent metres-air. For every component and fitting present in the system, and to check that the total is less than the maximum length the permissible for the boiler model.

IMPORTANT: the pipes and fittings flow resistance (reduction) have been summarised on the following pages. The flow resistance values written refer only to Ferroli pipes and fittings.

CALCULATION ROUTINE

1. Utilise the pipes and fittings flows resistance tables on the following pages and calculate the total flow resistance in metres-air, by adding the flow resistances of the components in the whole air-flue system, based on their position (vertical or horizontal, air inlet or flue outlet).
   Please note that the same fitting, identified by a one code (i.e. 1 pipe diameter 80, code KWMA83A), can offer different flow resistances if positioned as air inlet or flue outlet, if placed vertically or horizontally.
   The flow resistance of the special two pipe flue-air adapters do not have to be included in the calculation as they are already included in the maximum length calculation.
2. For the restrictors, please refer to cap. 3.06 to determinate the correct diaphragm.
3. Check that the total flow resistance calculated is less or equal to 48 metre, the maximum permissible for Domina 80E.

Tab. 1 - Pipes and fittings reduction table

	Description	REDUCTION AIR Vertical	REDUCTION AIR Horizontal	REDUCTION FLUE Vertical	REDUCTION FLUE Horizontal
Accessories Ø 80	Male-female flue 1 m - Ø 80	1	1	1	2
	Female-female bend 45° Ø 80 m	1,2		2,2	
	Female-female bend 90° Ø 80 m	1,5		2,5	
	Male-female bend 90° Ø 80 m	1,5		2,5	
	Pipe fitting M/M/F Ø 80 mm with inspecting plug + trap for condensate drainage system			7	
	Condensate flue outlet Ø 80 mm			3	
	Spigot-and-socket reduction Ø 100/80 mm	0			

	Dscription	REDUCTION AIR Vertical	REDUCTION AIR Horizontal	REDUCTION FLUE Vertical	REDUCTION FLUE Horizontal
Accessories Ø 80	Air wall terminal products of combustion Ø 80 mm				5
	Air terminal of inlet protection Ø 80 mm		2		
	Outlet flue air inlet for concentric system Ø 100/60 mm + Pipe fitting for outlet flue Ø 80 mm			4	
	Outlet flue air inlet for connection with split end Ø 80 mm	12			

Accessories Ø 100	Description	REDUCTION AIR Vertical	REDUCTION AIR Horizontal	REDUCTION FLUE Vertical	REDUCTION FLUE Horizontal
	Male-female flue 1 m - Ø 100	0,4	0,4	0,4	0,8
	Male-female bend 45° Ø 100 mm	0,6		1	
	Male-female bend 90° Ø 100 mm	0,8		1,3	

Accessories Ø 100	Description	REDUCTION AIR Vertical	REDUCTION AIR Horizontal	REDUCTION FLUE Vertical	REDUCTION FLUE Horizontal
	Air wall terminal products of combustion Ø 100				3
	Air terminal of outlet protection Ø 100 mm		1,5		
	Spigot-and-socket reduction Ø 100/80 mm	1,5		3	

FOR FURTHER ACCESSORIES PLEASE REFER TO:
"FLUE SYSTEM MANUAL FOR ROOM SEALED BOILER"

Example of calculation for wall inlet/outlet with 2 pipe system maximum total flue length: 48 metres

Attention: flow resistance (reduction) equivalent included between 38 and 48 (see table on page 27)
Remove the flue diaphragm.
The flue and air pipes must have an inclination downward equal to 3%.

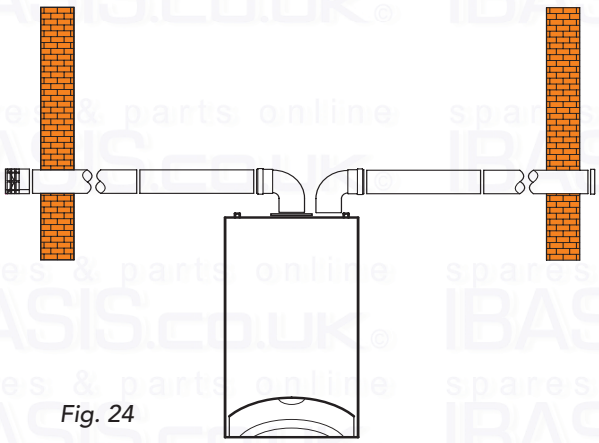

Fig. 24

REF.	N° OF PIECES	DESCRIPTION	CODE	LENGTH OR REDUCTION
1	1	Air bend 80 mm R/D = 0,75		1,5 m
2	12	Horizontal air pipe		12,0 m
3	1	Air wall terminal		2,0 m
4	1	Air inlet closing flange		—
5	1	Flue bend 80 mm R/D = 0,75		2,5 m
6	12	Horizontal flue		24,0 m
7	1	Air wall terminal outlet flue		5,0 m
			TOTAL	47,0 m

3.08.3 Example of installation with two pipe systems

Example of wall inlet/outlet

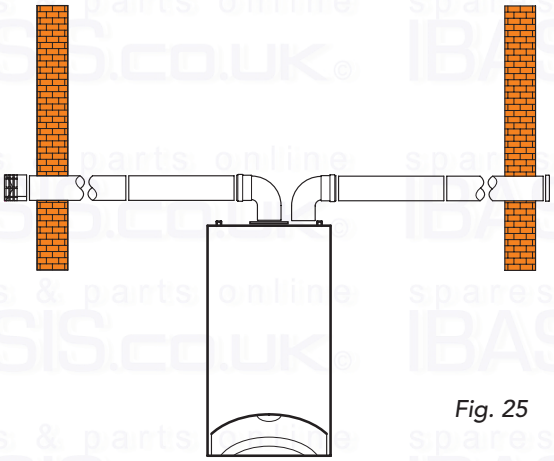

Fig. 25

Example of roof inlet/outlet

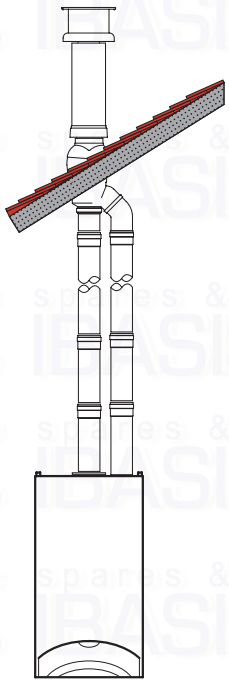

Fig. 26

Example of direct roof flue outlet and wall air inlet

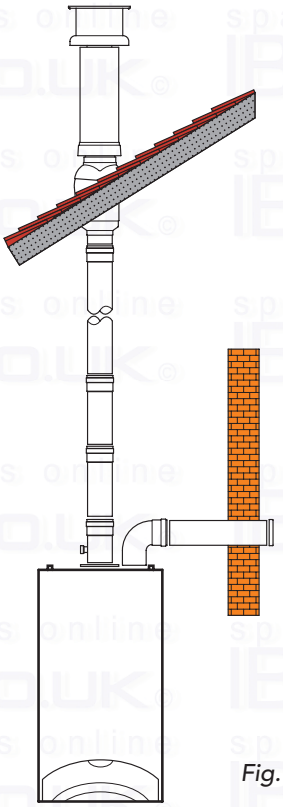

Fig. 28

3.09 Connecting the central heating and domestic hot water circuits

Connect to the relevant connections as indicated in fig. 1.
Connect the pressure relief valve discharge pipe (15mm) to the outside of the building, where possible over a drain. The discharge must be such that it will not be hazardous to occupants and passers-by or cause damage to external electric components or wiring. The pipe should be directed towards to the wall.
To ensure long life, the heating circuit should be correctly sized and fitted with all the controls necessary to ensure correct functioning and operation. The differential between the boiler flow and return pipes should not be more than 20°C. You are advised not to use the boiler with return temperatures of less than 50°C in order to prevent patches of condensation forming and having a corrosive effect on boiler components.

3.10 Boiler water characteristics

If the water is harder than 18 clarke degrees, the water used should be treated to avoid possible scale in the boiler caused by hard water or corrosion by aggressive water. It should be remembered that as a result of its low thermal conductivity, even scale of just a few millimetres thick can lead to considerable overheating of the boiler walls, resulting in serious problems.
IT IS ABSOLUTELY VITAL THAT THE WATER USED IS TREATED IN THE FOLLOWING CASES:
a) Extensive systems (containing large quantities of water);
b) Frequent additions of water to top-up the system;
c) Domestic hot water circuits
If the system requires partial or total emptying, you are recommended to refill it with treated water.

3.11 Filling

When cold, system pressure should be about 1 bar. If while running venting off of air dissolved in the water causes the pressure of the central heating system to drop below the minimum level described above, the user must utilise a filling loop to bring it back to the original value. During operation, water pressure in the boiler when hot should be about 1.5 - 2 bars. After filling, always close and disconnect the filling loop.

Note - If there is a possibility of air pockets forming in certain points of the central heating system flow and return pipes, you are recommended to fit an air vent valve at these points.

Note - When the boiler is installed below the level of the central heating system, single check valve should be fitted to prevent gravity circulation around the heating system.

3.12 Gas connection

Gas connection should be carried out using a rigid pipe.
The flow at the gas meter should be sufficient for the simultaneous use of all appliances connected to it. Connect the gas supply to the boiler according to current regulations. The diameter of the gas tube leaving the boiler is not the determining factor in choosing the diameter of the pipe between the appliance and the meter. This must be selected in relation to length and pressure drop and in any instance should not be less than 22mm.

The whole of the gas installation including the meter should be inspected and tested for soundness and purged in accordance with BS6891-1988.

N.B. - The filling loop will be fitted by the installer in accordance with water by laws at the time of installing the system. **It is NOT a part of the boiler.**

3.13 Electrical connection

The boiler must be connected to a single phase 230 V 50 Hz electricity supply with a 3 A max. fuse and a bipolar switch with contact opening of at least 3 mm fitted between the boiler and the electricity supply. The boiler must always be connected to an efficient earth installation. Under the electrical box, there is a 3 pole terminal board for connecting the boiler to the mains (230 V 50 Hz) and a 2 pole board for connecting a room thermostat (RT). To connect, undo the screws fixing the terminal board box and connect the wires, ensuring correct polarity of the terminals. It should be noted that there is low voltage (24 V) between the room thermostat contacts.
When the boiler is connected to an electricity main, it is essential TO OBSERVE CORRECT POLARITIES (LIVE: brown cable, NEUTRAL: blue cable, EARTH: yellow-green cable).

All wiring must conform to current I.E.E. regulations.

Note: If the power supply cable has to be replaced, use "0.75mm (24/0.20) cable only to BS6500 with a maximum external diameter of 8 mm.

Note - When connecting a room thermostat or external timer, do not link the power supply of these devices to the switching contacts. The switch contacts must be voltage free. Any mains powered devices must utilise mains power solely to drive the timer motor.

Applying mains voltage to the switch contacts will irreparably damage the circuit board.

Although this boiler can also be used without a room thermostat, you are recommended to install one for the following reasons:
Greater comfort conditions due to more accurate control of room temperature.
Greater energy savings.

3.14 Differential air pressure switch (fig. 2 - part 43)

The differential air pressure switch is a safety device which allows the main burner to ignite only after having verified that the fan is working correctly. If the difference in pressure between the flue gas discharge pipe and the air intake pipe is not at least equal to the minimum pressure switch calibration value, the pressure switch contacts do not close and the gas valve is thus prevented from opening.
In addition, the electrical circuit of the boiler is designed so that if for any reason the air pressure switch contacts remain closed when the fan stops, the burner will not start up again.

3.15 Checks

Fill the central heating system as described previously (3.11) and check there are no leaks in the domestic hot water and boiler water circuits. Check that there are no gas leaks on the boiler or the supply to the boiler. Also check that the electrical connections are correct.

3.16 Installing a room thermostat (72) (fig. 48)

To connect the thermostat:
Open the electrical box on the base of the appliance and remove the "jumper cable" between terminals 4 and 5.

Connect the room thermostat (72) as shown in figure 48.

3.17 Ferroli Domina boiler programmer fixing (optional)

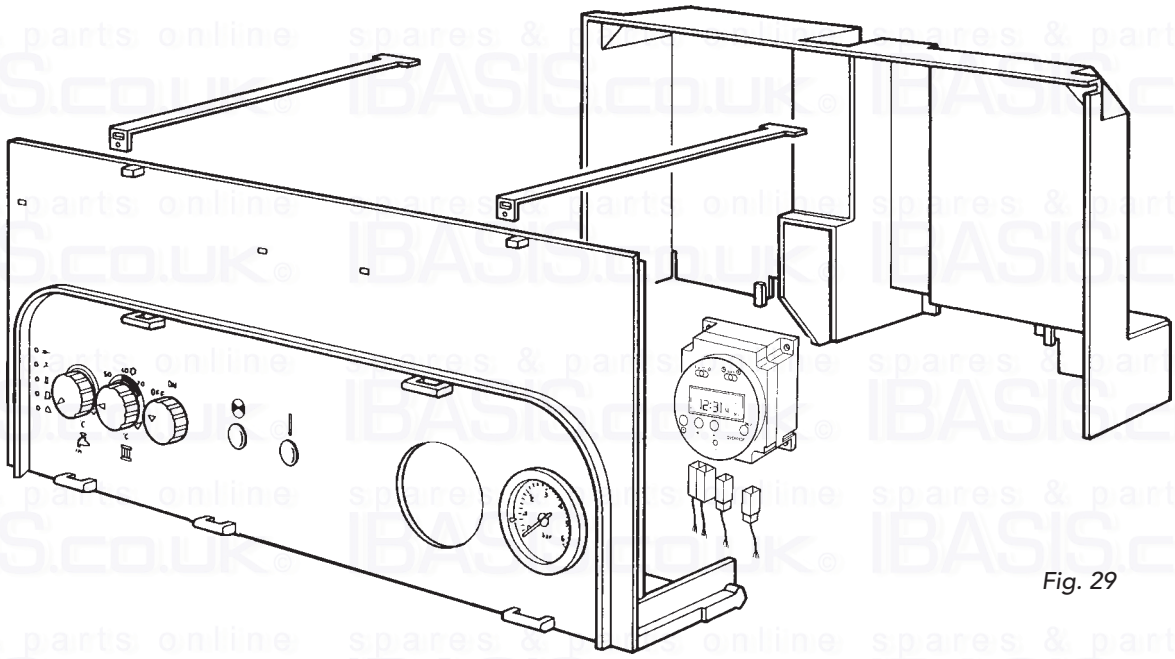

Fig. 29

- Remove outer case by removing two securing screws from the rear bottom corners and lift off.
- Remove screw securing facia panel and swing facia panel down.
- Remove rear cover from facia.
- Remove clock blanking plate from the boiler facia panel.
- Mount clock into facia panel using two screws provided.
- Take the black cable containing the blue and brown wires and connect the loose spades to clock terminals 1 & 2.
- Connect the plug end of the cable to terminal X4 of main circuit board.
- Remove the connector link from the 2 wires located behind the clock position.
- Connect these to terminal 3 and 5 of the clock.
- Replace everything in reverse order.
- Please refer to page 66 of User manual for use of time clock

Existing wiring

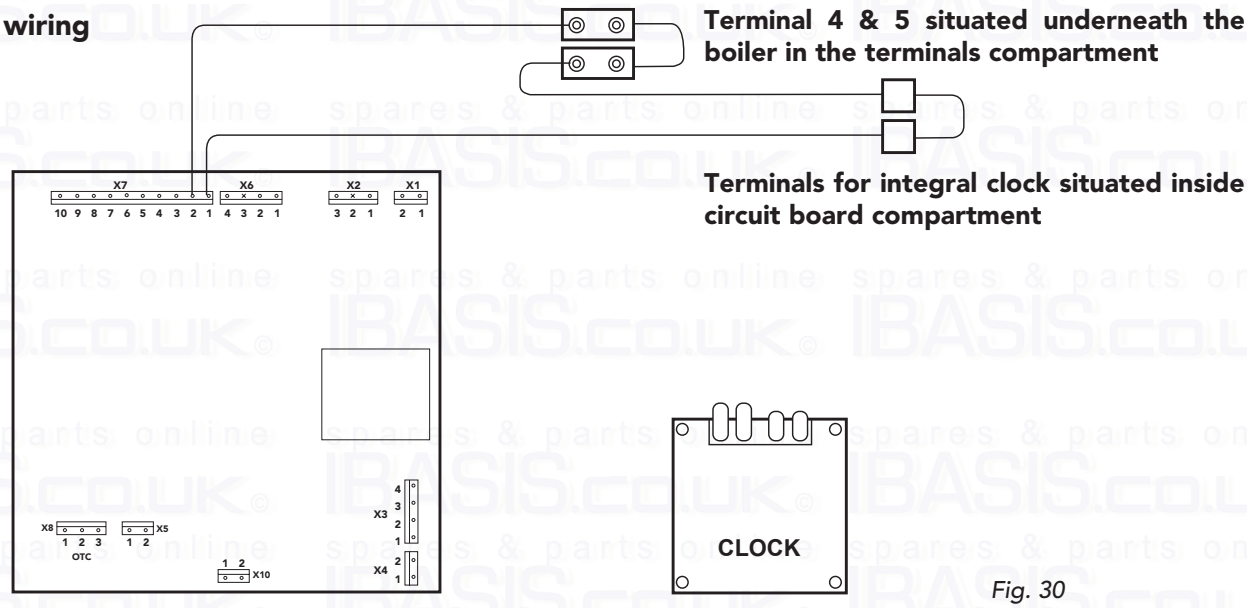

Fig. 30

Wiring for integral clock and/or external controls

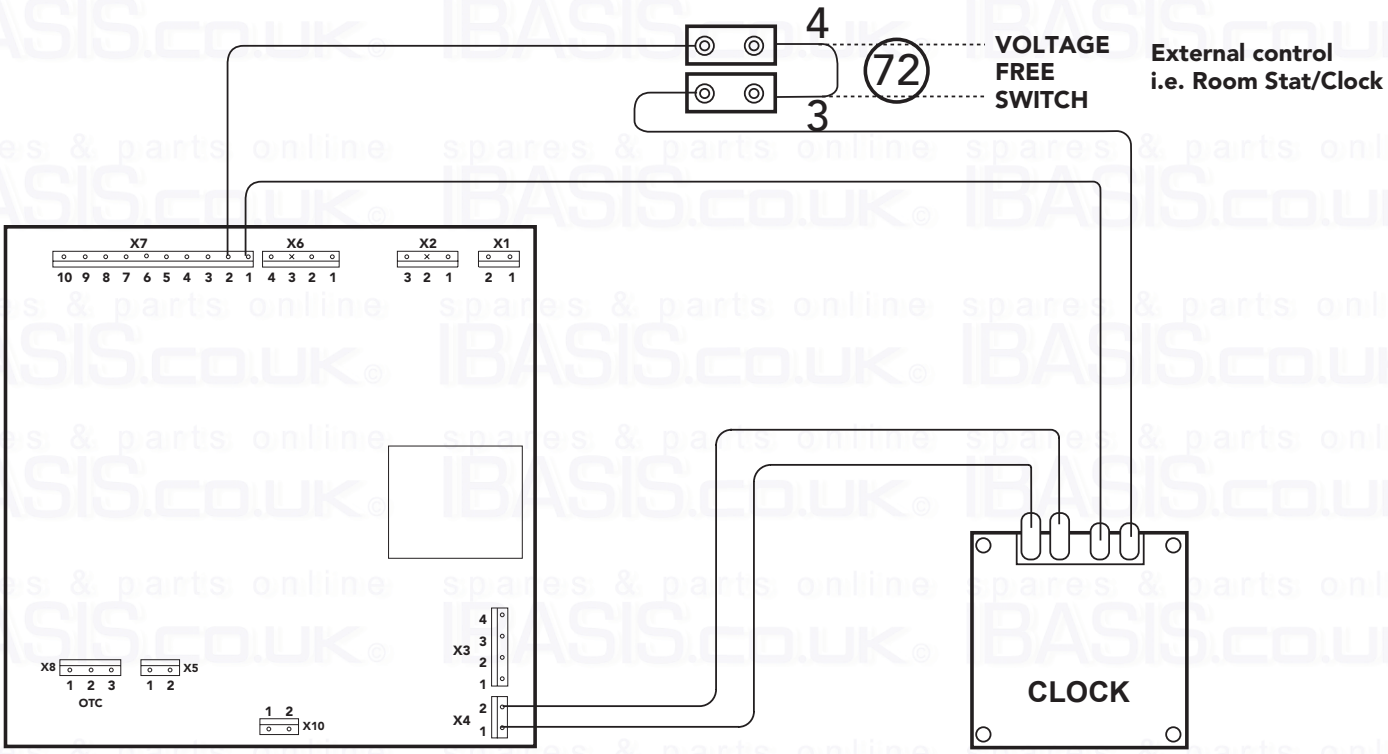

Fig. 31

4. COMMISSIONING AND TESTING

4.01 Checks to be carried out before starting up for the first time

When starting the boiler up for the first time check:

- that the gate valves between the boiler and central heating systems are open;
- that the central heating system is filled and vented;
- that there are no gas or water leaks from the central heating system or boiler;
- that the electric connections are correct and the earth wire of the boiler is connected to an efficient earthing installation and a 3amp. fuse is fitted to the isolator;
- that there are no flammable liquids or materials near the boiler;

4.02 Starting up the boiler

- Open the gas cock upstream of the boiler.
- Vent air present in the pipe upstream of the gas valve.
- Turn on the switch (if present) or plug in the boiler.
- Rotate the switch (fig. 2 - part 98) into the ON position.
- Check inlet working gas pressure, burner pressures and gas rate.

At this point, choose whether the boiler is to be used for central heating and domestic hot water production or for domestic hot water production only. If the former is chosen (central heating and domestic hot water production), turn the knob 63 (fig. 2) to the "Winter" position. Set the knob above 50°C and set the room thermostat (if fitted) to maximum. The burner ignites and the boiler starts to function automatically, controlled by its control and safety devices.

If the latter is chosen (domestic hot water production only), position the knob 63 (fig. 2) on the "Summer" position. In this mode the boiler is ready to operate automatically whenever domestic hot water is drawn off.

Note - If after completing the start-up procedure correctly, the burners fail to ignite and the boiler shut down warning lights up, wait about 15 seconds then rotate the knob 98 (fig. 2) against spring pressure to the RESET position and release it. The reset electronic control unit will repeat the start-up cycle.

Note - In central heating mode after resetting the boiler will go into it 2 minue delay before starting up again. If after a second attempt the burners still fail to ignite, consult the paragraph "Troubleshooting".

Note - If there is a power failure while the boiler is in operation, the burners automatically go out and re-ignite when the power returns.

4.03 Shutting down

Close the boiler isolation gas cock and turn off the electricity to the boiler.

Important: If the boiler is not to be used for lengthy periods during the winter, to avoid frost damage, you are recommended to drain the water from the circuits (domestic hot water and central heating). Alternatively, drain the domestic hot water system only and add special anti-freeze to the central heating system.

4.04 Checks and controls after first start-up

- Check there are no leaks in the gas and water circuits.
- Check correct boiler start up by carrying out start up and shut down tests using the boiler stat.
- Check the integrity of the air-flue pipes during boiler operation.
- Check that the gas consumption indicated on the meter corresponds to that given in Technical Data (page 5).

- Check that water is circulating correctly. Balance the radiators to ensure that the flow and return differential does not exceed 20°C.
- Check that when operating in the "Winter" mode, the pump stops and domestic hot water is produced correctly when the hot water tap is turned on.
- Check that in the "Summer" mode, the burner lights up and shuts down correctly when the domestic hot water tap is turned on and off.
- Check that the domestic hot water flow and ΔT correspond to the table. Do not rely on empirical measurements. Temperature should be measured using thermometers as near as possible to the boiler, bearing in mind the heat loss from the pipes.
- Check that the gas valve modulates correctly both during the central heating phase and the domestic hot water production phase.
- Determine the combustion efficiency and the composition of the flue gases (refer to 8.04)
- If any of the above are not correct refer to Technical Data (page 5). Adjustment (page 41) and Troubleshooting (page 58).

5. ADJUSTMENT AND GAS CONVERSION

5.01 Adjusting the pressure and flow rate to the main burner

This boiler operates on the flame modulation principle. It has two fixed pressure values, minimum and maximum, which must be as shown in the table (pages 5), whichever type of gas is used.

Note - Because correct minimum and maximum pressures are critical to the efficient operation of the boiler it is ESSENTIAL that the following adjustments are carried out by COMPETENT personnel ONLY.

5.02 Adjusting minimum and maximum pressure Honeywell V K4105G gas valve

- Connect suitable pressure gauge to burner test point "**B**" downstream of the gas valve.
- Disconnect the pressure compensation tube «**F**».
- Remove the protective cap «**C**».
- Adjust potentiometre **P3** (on the main board) at minimum (anticlockwise).
- Operate boiler for central heating
- Adjust minimum pressure by rotating screw «**D**» clockwise toreduce pressure and anticlockwise to increase pressure.
- Adjust potentiometre **P3** at maximum (clockwise)
- Adjust max pressure by rotating screw «**E**», clockwise to increase pressure and anticlockwise to reduce pressure.
- Reconnect the pressure compensation tube «**F**».
- Replace protective cap «**C**».

Maximum + Minimum possible gas pressures are now set. Range Rating the central heating is not necessary because for Central Heating the Auto Range Rating facility will set the burner pressure to set the system unless the boiler thermostat is set to max, when the burner pressure will go to max output.

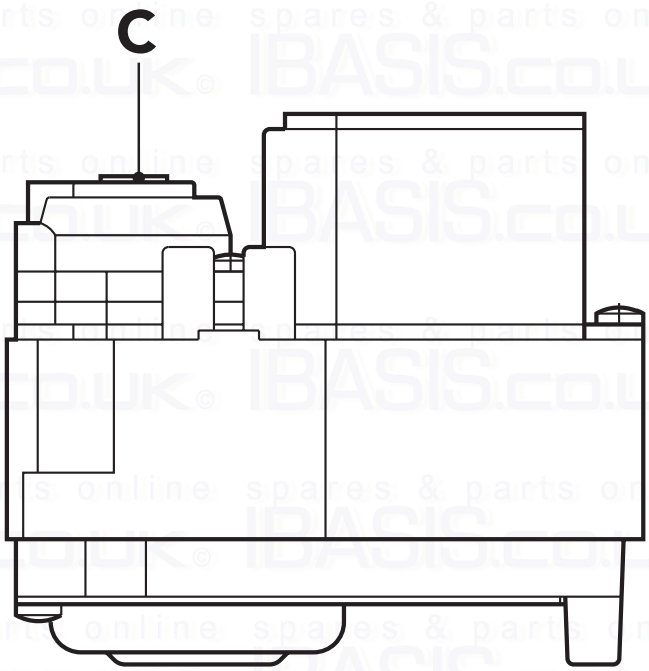

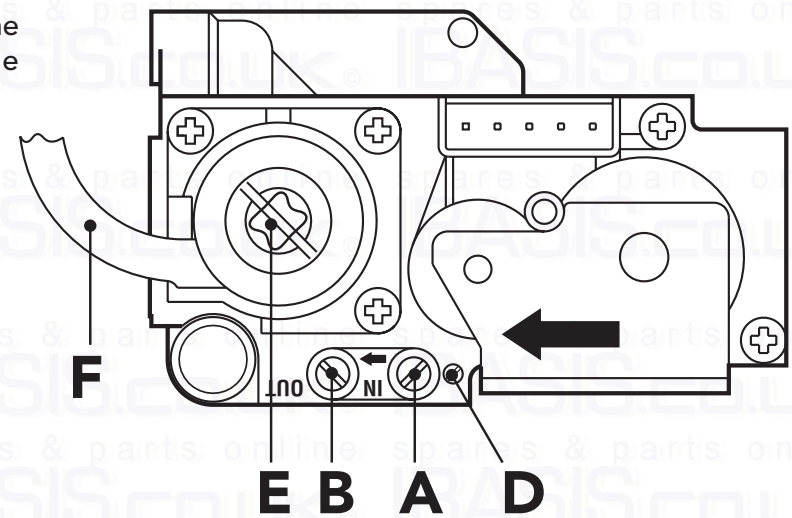

Legenda

A	=	*Gas inlet test point*
B	=	*Gas outlet test point*
C	=	*Protection cup*
D	=	*Min. pressure adjusting screw*
E	=	*Max. pressure adjusting screw*
F	=	*Balancing tube*

Fig. 32

5.03 Adjustment potentiometers

On the main P.C.B.

P1 = *C.H. temperature adjustment*
P2 = *D.H.W. temperature adjustment*
P3 = *C.H. output adjustment*

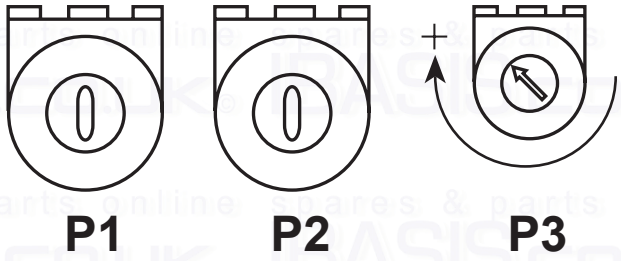

On Ignition Board

P4 = *Ignition gas pressure adjustment*
P5 = *Factory set - Don't touch*

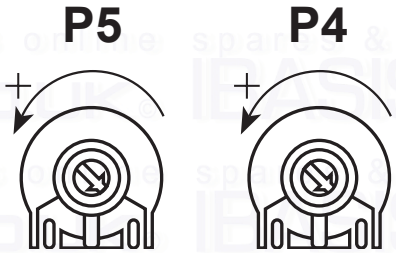

Fig. 33

5.04 Adjusting maximum output for central heating system (fig. 33)

This adjustment must be carried out electronically using the "P3" adjustment screw starting with a cold central heating system.
Connect a pressure gauge to the pressure test point downstream of the gas valve. Rotate the temperature adjustment screw to maximum then regulate the pressure to the value required, consulting the diagram (figs. 4 and 5) (page 8).
Once this operation is complete, start up and shut down the burner two or three times using the thermostat. Check each time that the pressure values remain as adjusted and that the burner ignites correctly. Otherwise further adjustment is necessary until the pressure remains stable on this value.

N.B. - when carrying out this operation ensure that the boiler thermostat is set to maximum otherwise the adjustment will not be accurate.

5.05 Adjusting central heating flow temperature

Central heating water temperature is adjusted by rotating the control knob (fig. 2 - part 63). Rotate the knob clockwise to increase water temperature, anticlockwise to reduce water temperature. Temperature can be varied from a minimum of 30°C to a maximum of 85°C.
However, we recommend not operating the boiler below 50°C.

5.06 Adjusting room temperature (when a room thermostat is fitted)

Room temperature is controlled by positioning the room thermostat knob to the required value. The thermostat automatically controls the boiler, temporarily interrupting the electrical supply subject to the room heat requirements.

5.07 Adjusting the central heating flow Δt by varying pump flow-head

The thermal head Δt (the difference in temperature between the delivery water and return water in the central heating circuit) must be less than 20° c. This is obtained by varying pump flow rate and head using the multi-speed variator (or switch) on the pump itself. Increasing the pump speed reduces Δt and vice versa. The minimum differential must not be less than 11°C.

5.08 Adjusting central heating system pressure

The pressure of water in the central heating system, read on the control panel pressure gauge, is adjusted as described in paragraph 3.11 page 35.

N.B. - To avoid incurring unnecessary expense, in the event of boiler shut down, check that this is not caused by a lack of electricity or gas, or low water pressure before calling the Customer Technical Service Helpline.

5.09 Gas conversion

The following adjustment and conversion operations must be carried out by competent personnel. FERROLI Limited accepts no liability for damage to property or personal injury resulting from tampering with the boiler by unauthorised persons.

To convert the boiler from Nat Gas to LPG and vice versa, the main burner injectors must be replaced. Minimum and maximum pressures must then be adjusted on the gas valve (see Adjustment page 41).

Note: After converting the boiler from natural gas to liquid gas, fit the orange plate in the conversion kit near the data plate.

Note: injector diameters and pressures at the main burner are given in Technical Data (page 5).

spares & parts online IBASIS.CO.UK

6. MAINTENANCE AND CLEANING

The following operations must be carried out by Corgi registered engineers only.

6.01 Annual Servicing

The following should be checked at least once a year:

- Water pressure in the central heating system when cold should be about 1 bar. If this is not the case, bring it back to this value.
- Check control and safety devices (gas valve, flow meter, thermostats, etc) are functioning correctly.
- The burner and heat exchanger must be clean. To avoid damage, always clean them with a soft brush or compressed air. Never use chemical products.
- The expansion vessel must be checked (precharge 1 bar).
- Check there are no leaks in the gas and water circuits.
- Check the air-flue gas duct terminal is free from obstructions and sound.
- The electrodes must be free from corrosion build up and correctly positioned.
- Gas flow and pressure must correspond to the values given in the Technical Data (page 5).
- The pump must be free to rotate.

6.02 Cleaning the boiler and burner

The boiler should be serviced annually. The heat exchanger and burner must never be cleaned with chemical products or steel brushes. Particular attention must be paid to all seals and fixings associated with the room-sealed compartment (gaskets, grommets, etc). Air leakage would cause pressure inside the compartment to drop, possibly tripping the differential pressure switch and thus shutting down the boiler. After cleaning particular attention should also be paid to checking stages of start-up and operation of the thermostats, gas valve and pump.

6.03 Servicing procedure

1. Visually check boiler for correct intallation and flueing.
2. Isolate electricity supply + check fuse is 3amp.
3. Remove case by undoing the two screws locate at the bottom rear corners, lift slightly and pull forward.
4. Carry out preliminary electrical checks at boiler junction box. This is located in the centre of the boiler at the bottom and can be accessed be the removal of a single screw. Any faults found must be rectified before proceeding.
5. If electrical checks prove O.K. replace cover and secure with screw.
6. Attach a manometer to the boiler gas inlet test point, turn on electricty and fire boiler for hot water, check inlet pressure. This should be 20mbar **minimum** for NG and 37mbar for LPG. If this is not the case there is a supply problem and this will need to be remedied.
7. If inlet pressure is O.K. shut down boiler and remove manometer from gas inlet pressure test point and attach it to the boiler burner pressure test point. Reseal inlet pressure test point.
8. Fire boiler for hot water and check that the maximum pressure is 11.8mbar for NG and 36.0mbar for LPG. Turn off tap. Turn P3 on the main circuit board to minimum and fire the boiler for heating, check that the burner pressure reads 2.5 mbar for NG and 7.8mbar for LPG. Turn P3 back to max position. Shut down boiler, remove manometer, seal test point. If the pressures are not as specified they will need to be adjusted on the gas valve(see page 41 - installation manual).
10. Remove fan by undoing the two fan securing screws tilt the front of the fan upwards (downwards for rear outlet flue) to detach it from the securing pin and withdraw it from the boiler, disconnect the wires and air pressure switch tubes.

11. Take off the combustion chamber cover by removing the three securing screws.
12. Lift off flue hood and flue baffle plate.
13. Pull off the ignition and flame rectification leads from their respective electrodes.
14. Undo the gas union in the centre of burner rail and take out the two securing screws. Remove the burner rail and clean rail and injectors.
15. Remove two screws securing the burner assembly and remove the assembly. Clean burners.
16. Clean heat exchanger with a soft brush.
17. Re-assemble baffle, flue hood and fan assembly, secure with screws previously removed.
18. Refit burner assembly and burner rail.
19. Reconnect ignition and flame rectification leads.
20. Reconnect gas union and tighten.
21. Refit combustion chamber cover, secure with screws.
22. Examine seals on room sealed cover refit cover and secure with screws.
23. Turn on gas and electricity.
24. Fire boiler and check all gas joints for soundess.
25. Check flame picture and all controls for correct operation.
26. Check room sealed cover for leakage.
27. Check domestic water flow rate and temperature is within specifications.
28. Check operation of all safety cut off devices.
29. If a combustion analyser is to be used there are test points provided on the front of the room sealed cover. The right hand grommet is for air and the left hand one is for flue gas. The boiler must reach operating temperature before this test is carried out (normally 10-15 minutes). CO/CO2 ratio should not exceed 0.0080. Immediatly after servicing (0.0040 at any other time)
30. Refit case and secure with screws.
31. Leave boiler set to customers requirements.

6.04 Flue Gas Analysis

1. The appliance should be checked visually for obvious defects.
2. After removing the jacket on the boiler there are two test point, one for flue gas and the other for air.
3. Open the air and flue gas test points;
4. Introduce the probes as far as the retainer;
5. Turn on the hot water tap;
6. Turn the domestic hot water stat to maximum;
7. Allow the boiler to reach thermal equilibrium (10 - 15 min.);
8. Take reading;
9. The CO/CO_2 ratio should be 0.0040 or below. If the reading is above this then a full strip down service must be carried out and the cause remedied.
10. Following a full strip down service and after reaching thermal equilibrium the permissible reading is 0.008 or below.

Fig. 34

N.B.: To ensure correct readings the boiler **must** have reached **normal operating temperature.** Testing the boiler **before thermal equilibrium** has been attained **will give incorrect readings.**

N.B.: If you have only 1 probe, measure separately air and flue gas, close the test point not in use.

7.0 REPLACEMENT OF PARTS

7.01 Initial procedure

a) The boiler is cold, electricity supply is isolated, and the gas supply is turned off at the inlet of the boiler

b) For replacement of parts where water connections are broken, it will be necessary to isolate and drain either or both the central heating or domestic hot water circuits of the boiler only. The cold water mains inlet is isolated at the inlet cock. The D.H.W. is drained by opening a hot tap. The C.H. flow and return cocks are turned off at the isolation cocks. The C.H. is drained via the pressure relief valve (twist about 1/2 of a turn).

c) Remove components following special notice below and replace in reverse order.

d) Ensure water and gas washers are in good condition.

7.02 Final procedure

- Re-open cocks and re-charge the system to about 1 bar, and vent boiler and radiators. Re-charge to 1 bar if necessary.

- Upon completion of the work the following. Should be checked:
  I) Gas soundness of all joints
  II) Water soundness of all joints
  III) The electricity supply.
  IV) The pressure of the sealed system and top up where necessary.

7.03 To lower the control panel (fig. 35)

- Remove the two fixing screw (fig. 35) "A"
- Lift the two metal brackets "B"
- Rotate down the front panel "C"

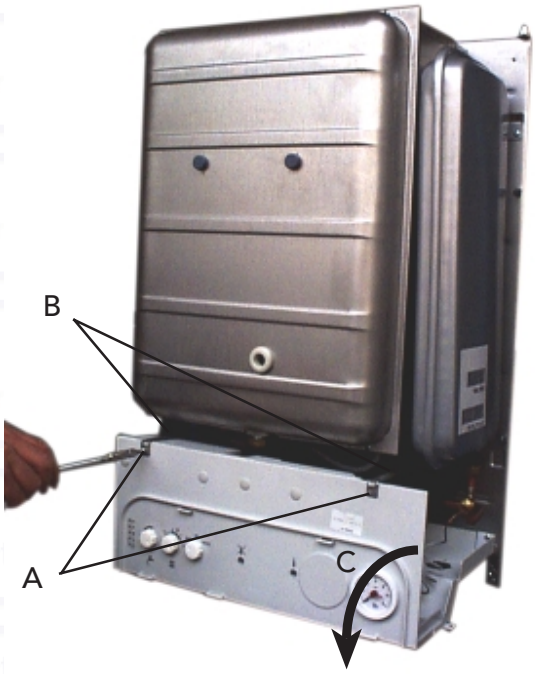

Fig. 35

7.04 Remove and re-presurising of C.H. expansion vessel (fig. 36)

- Refer to 7.01 a, b
- Isolate electricity and water supplies
- Remove outer case (two screws bottom rear corners)
- Loosen the "A" connections to expansion vessel
- Remove "B" screw
- Remove the expansion vessel
- Re-assemble in reverse order
- Re-pressure expansion vessel (charge pressure 0,8-1 bar) through the valve "C"
- Ensure pressure relief value is open (twist about 1/2 of a turn) when repressurizing

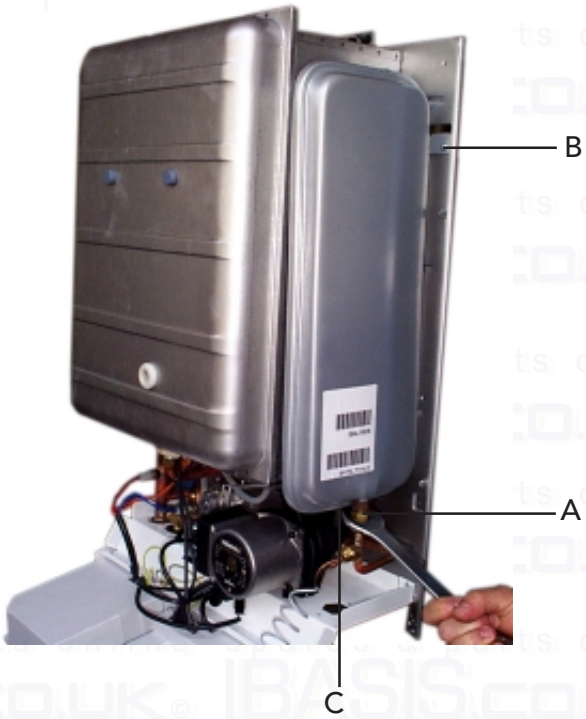

Fig. 36

7.05 Gas valve (fig. 37)

- Isolate gas and electricity supplies
- Remove outer case (two screws bottom rear corners)
- Remove the two securing screws and lower control panel
- Disconnect electrical connections from valve ("A", "B")
- Disconnect plastic tube "C"
- Loosen the connection "D" on gas pipe and the gas inlet connection of the boiler
- Remove the two fixing screw "E" below gas valve

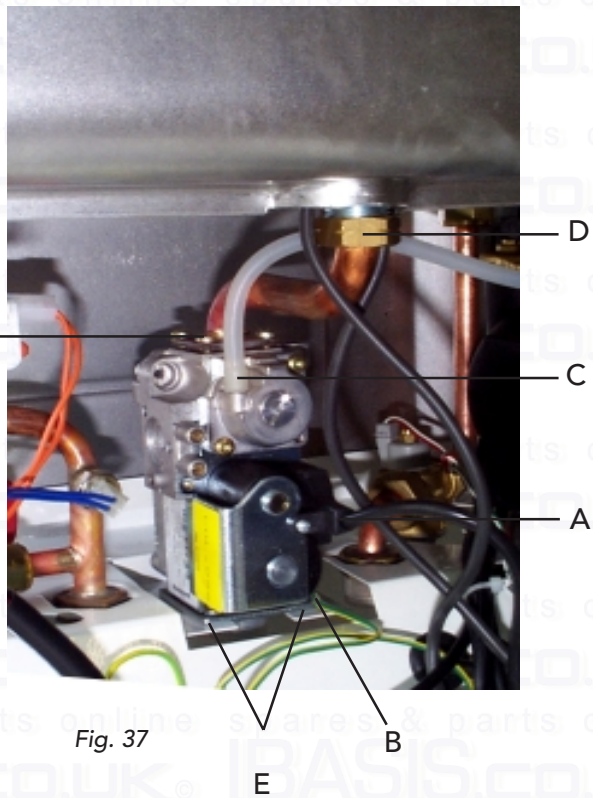

Fig. 37

- Slide out gas valve
- Remove four fixing screw "F" on top of the valve and disconnect the gas pipe
- Remove bottom connection from gas valve.
- Fit top + bottom gas connections to the new gas valve and replace in reverse order

7.06 Air pressure switch (fig. 38)

- Isolate electricity
- Remove outer case (two screws bottom rear corners)
- Open room sealed department
- Remove the two screw "A" fixing air pressure switch
- Disconnect electrical leads "B"
- Remove pressure sensing tubes (white=D; Red=C)
- Note relevant positions of all connections and replace in reverse order.

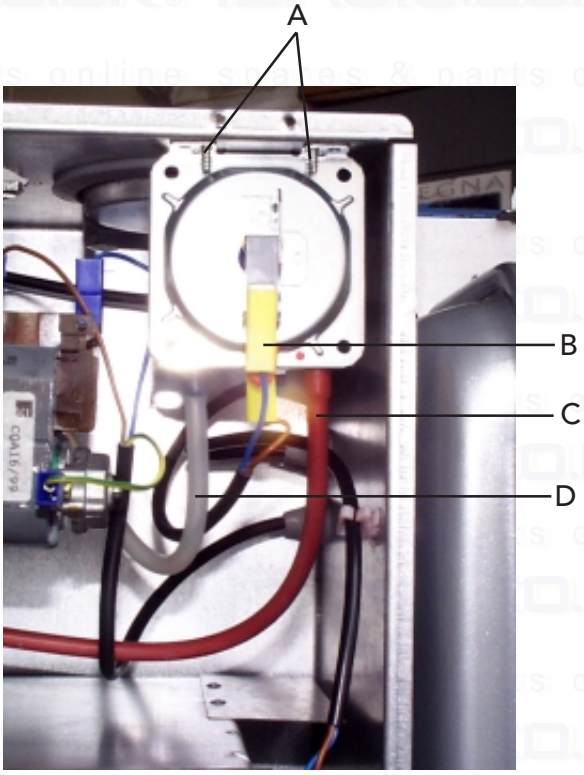

Fig. 38

7.07 D.H.W. temperature sensor or Central Heating Temperature Sensor (fig. 39)

- Isolate electricity and water supplies
- Remove outer case (two screws bottom rear corners)
- Remove the two securing screws and lower control panel
- Identify the sensor from figure 39
- Disconnect electrical connection to the sensor
- Drain the boiler
- Unscrew the sensor
- Replace in reverse order

7.11 Water Pressure Switch (fig. 39)

- Isolate electricity and water supplies
- Remove outer case (two screws bottom rear corners)
- Remove the two securing screws and lower control panel
- Identify the switch from figure 39
- Disconnect electrical connections + note positions to the switch
- Drain the boiler
- Unscrew the sensor
- Replace in reverse order

7.12 Safety Valve (fig. 39)

- Isolate electricity and water supplies
- Remove outer case (two screws bottom rear corners)
- Remove the two securing screws and lower control panel
- Identify valve from fig. 39
- Drain the boiler
- Release the outlet union to the valve and undo the valve union connection
- Remove the valve outlet fitting
- Replace in reverse order

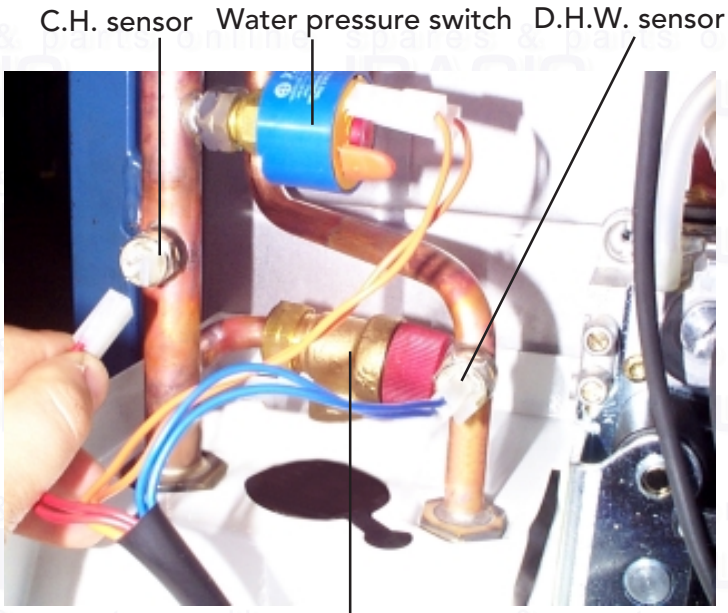

Fig. 39

7.08 Removal of burner (fig. 40)

- Isolate gas and electricity supplies
- Remove outer case (two screws bottom rear corners)
- Remove room sealed cover
- Disconnect ignition and flame rectification leads "A"
- undo gas rail union "B"
- Undo two screws securing the burner assembly to the boiler combustion chamber "D"
- Withdraw the burner assembly

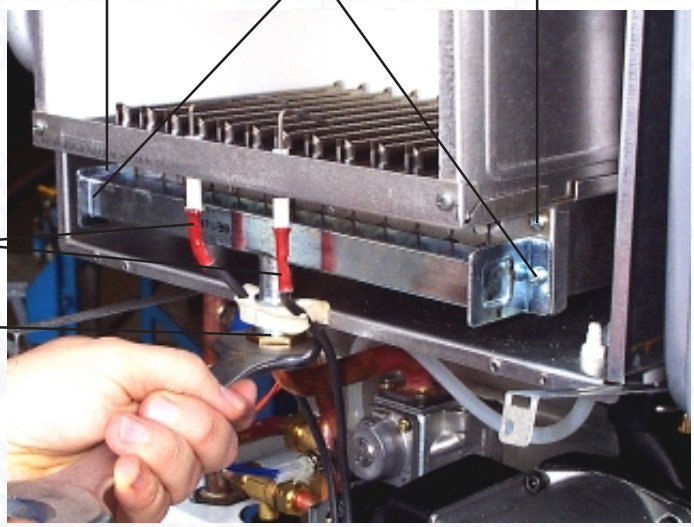

Fig. 40

7.09 Injectors (fig. 40-41)

- Proceed as 7.08
- Remove fixing screw "C" on both sides of gas collector
- Remove gas collector
- Unscrew and remove injectors;
- Clear or change injectors

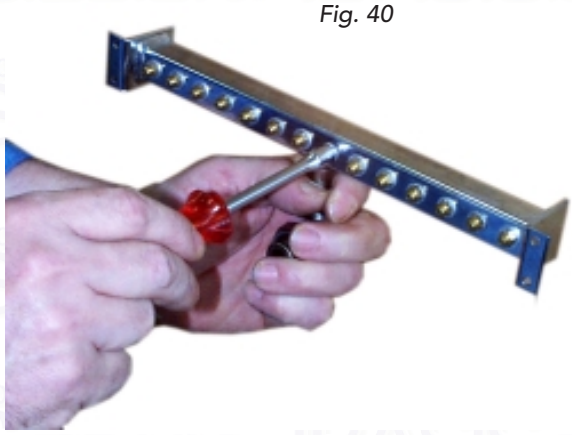
Fig. 41

7.10 Removal of fan (fig. 42)

- Isolate gas and electricity supplies
- Remove outer case (two screws bottom rear corners)
- Remove room sealed cover
- Disconnect fan electrical leads "A"and note positions
- Disconnect air pressure tubes from air pressure switch "B" + note positions
- Undo two screws securing fan assembly "C"
- Remove fan from boiler
- Swap mounting plate over to new fan + replace in reverse order

7.11 Limit thermostat, or overheat cut off thermostat (fig. 42)

- Isolate electricity
- Remove outer case (two screws bottom rear corners)
- Remove room sealed cover
- Identify the location of thermostat from fig. 42
- Pull out thermostat from tube, with its spring
- Remove electrical connections from thermostat
- Remove spring from thermostat
- Replace in reverse order

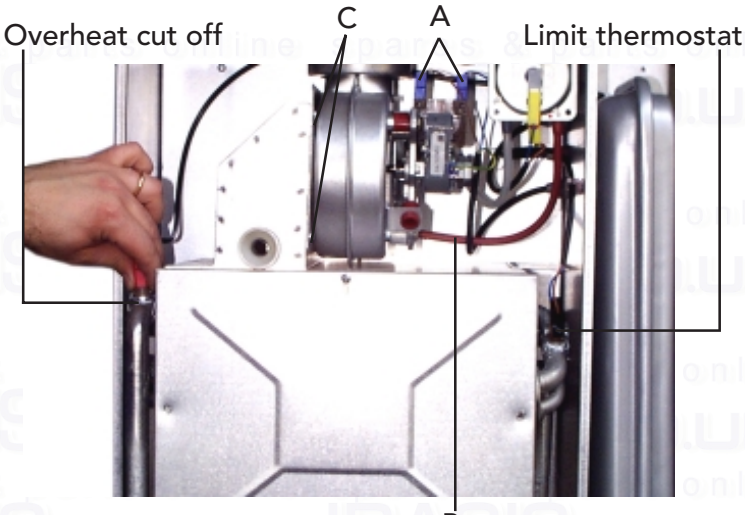

Fig. 42

7.12 Spark or flame detect electrode (fig. 43)

- Isolate gas and electricity supply
- Remove outer case (two screws bottom rear corners)
- Open room sealed compartment and combustion chamber
- Identify electrode from fig. 43
- Unplug electrical connection "A" from sensing electrode
- Remove fixing screw and remove flame detect electrode
- Remove the two fixing screw from spark electrode plate and remove it.

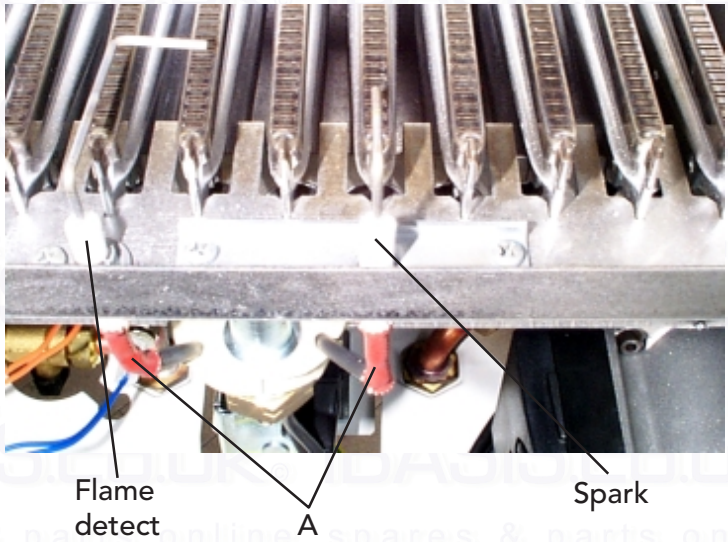

Fig. 43

7.13 D.H.W. flowmeter

- Isolate electricity and water supplies
- Open a hot water tap to release water pressure from the domestic side of the heat exchanger, close tap.
- Remove outer case (two screws bottom rear corners).
- Remove two screws from control panel and tilt forward
- Take off protective cover from main PCB and unplug flow meter lead from terminal X6
- Place a piece of cloth or some other absorbent material over rear of control panel to catch any drops of water that may be released when removing the flow meter
- Using a 24mm open ended spanner, undo flow meter unions "A" and "B" taking care not to twist the copper tubing (access through base panel).
- Remove flow meter, check + clean filter + restrictor + fit to new flow meter.
- Reassemble in reverse order.

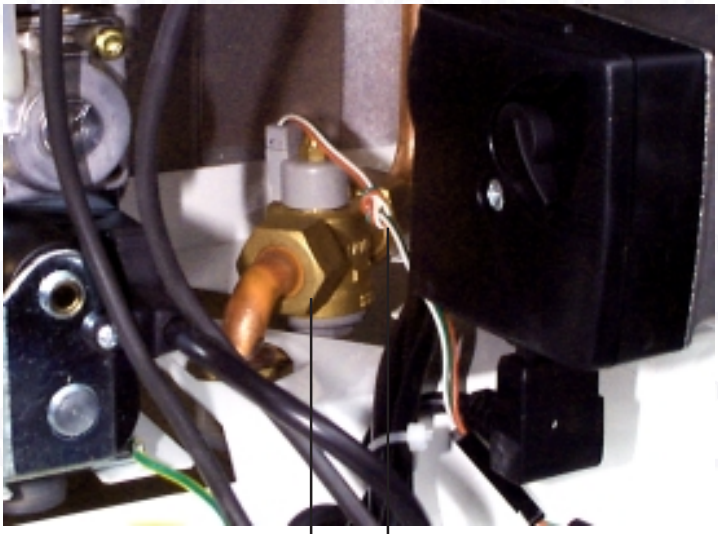

Fig. 44

7.14 Pump (fig. 45)

Replacement of pump head

- Isolate electricity and flow and return pipes
- Remove casing (two screws bottom rear corners).
- Remove the two securing screws and lower control panel
- Release pressure from boiler via pressure relief valve
- Unplug the pump lead "A" from the pump head
- Place a piece of cloth or other absorbent material over the rear of the control panel to catch any drops of water that may fall when the pump head is removed.
- Using a 4mm allen wrench undo the four allen screws "B" in the pump head, lift away pump head from the pump body
- fit new head into pump body and secure with the allen screws tightening evenly.
- Replace electrical connection.

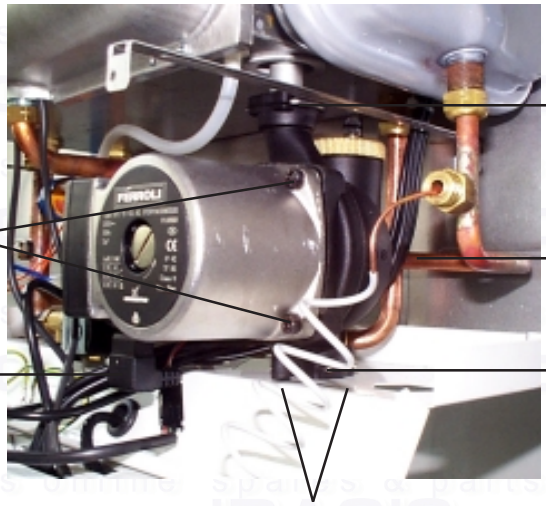

Fig. 45

Replacement of pump body (fig. 45)

- Proceed as for removal of pump head
- Disconnect the expansion vessel connecting pipe "E" from the rear of the pump body by removing the U clip from the left hand side
- Disconnect the boiler return pipe and disengage the pump lower connection by removing the U clip "C"
- Disconnect the pump to heat exchanger connection by removing the U clip "F"
- Unscrew the two screws on bottom of pump "D"
- Turn the pump body through 90°, pull the bottom forward and withdraw the pump body
- Reassemble in reverse order taking care to ensure the O-rings are in place and undamaged.

7.15 Removal of heat exchanger

- Isolate gas, water and electricity supplies
- Remove casing (2 screws bottom corners)
- Remove the two securing screws and lower control panel
- Drain heat exchanger for both CH + DHW
- Remove sealed compartment front panel
- Disconnect the overheat thermostat and central heating limit thermostat
- Remove the main burner, fan, flue hood and flow meter as described previously
- Remove the pump to heat exchanger flow connection and locknut
- Undo the domestic water outlet connection and locknut
- Lift out heat exchanger
- Re-assemble in reverse order

8.0 FAULT FINDING

Before beginning any fault finding ensure that gas, water and electricity are available.

WARNING: DO NOT link any terminals on block X8 or X4 as this will damage the PCB beyond repair.

8.01 Operating Sequence

With the power established the boiler is in its stand-by mode i. e. power on but no demand. The operational sequence for C.H. and D.H.W. are as follows:

Central Heating Mode

External Call for Heat: The temperature regulator, built in or remote clock and room thermostat, if fitted, must all call for heat. This will cause the pump to run.

Internal Call for Heat: C.H. flow temperature sensor, 88°C high limit and low water pressure switch all calling for heat. If both external and internal calls for heat are present the demand relay on the MF02 PCB will energise to switch live to the ignition PCB.

In demand the fan will go to high speed causing the air pressure switch to operate. If the overheat (100°C) stat is closed circuit the ignition will operate and the gas valve will be energised.

The burner will light at ignition burner pressure, automatically range rating itself up to the heating load, then modulating down when the boiler reaches the desired flow temperature. When the central heating is satisfied the burner will go off and the fan stops i.e. stand-by mode.

Note - If the boiler thermostat is set to maximum than the burner pressure will go to maximum effectively bypassing the auto range rating facility

Domestic Hot Water Mode

External Call for D.H.W: Flow meter registers at least 2.5 litres/min flow to the hot water taps.
Internal Call for D.H.W: Hot water flow temperature sensor 88°C high limit stat and low water pressure switch calling for heat.

If both internal and external calls are present the boiler follows the same sequence as for C.H. to light the burner. However, for D.H.W. the burner will go straight to maximum and then modulate once the water reaches the set temperature of the control thermostat. Turning the tap off will return the boiler to stand-by mode.

Note: Following shut down of the D.H.W. or C.H. the boiler will go into a three minute central heating delay.

8.02 Limit thermostats

T/Stat	Location	Function	Nominal Operating Temperature	Circuit	Wiring Colours
C.H. Limit	Top RHS of Heat Exchanger	Shuts downmain burner if boiler thermostat fails	88°C	Low voltage DC	Blue Brown
Frost	Incorporated in C.H. Sensor	Fires the boiler and runs pump to maintain minimum water temperature	7°C - 14°C	Low voltage DC	Red Red
Overheat	Top LHS of Heat Exchanger	Protect boiler by stopping ignition and cuts power to gas valve	100°C	240V AC	Brown Blue

The MFO2 PCB has five diagnostic lights, each light corresponds to a particular function and will light in turn as the boiler goes though its sequence of operations.

In order, the five lights indicate:

1 Mains electricity on/low voltage on
2 Flow meter operated
3 C.H. controls, room thermostat/clock and temperature regulator calling
4 C.H. waiting time (approximately three minutes)
5 Low water pressure switch - WARNING

Note: Always check for sufficient gas supply (20mbar inlet working pressure for NG and 37mbar for LPG). Minimum of 22 mm diameter pipework on C.H. flow and return with adequate by-pass. A correctly installed flue system and a 3 amp fuse.

8.03 MF02 PCB

When operating for C.H. the following lights should be on: 1, 3 and flame on light. for D.H.W. the following lights should be on: 1, 2, and flame on light.

If the boiler works for C.H. but not D.H.W., or vice versa, a number of components must be functioning and can, therefore, be eliminated as being at fault.

Boiler will not light for D.H.W.
If boiler works for C.H. but not for D.H.W. the fault is most likely to be the flow meter or D.H.W. sensor. If the tap symbol light is on the fault is the D.H.W. sensor. If this light is not on then suspect the flow meter has not operated.

Boiler will not light for C.H.
If the boiler works for D.H.W. but not for heating the fault is most likely to be external controls (i.e. clocks or room thermostats). Integral clock if fitted or C.H. sensor.

If the heating demand light is on the fault is most likely the C.H. sensor. If this light is not on suspect either a clock or room thermostat not calling.

To override/eliminate any external controls disconnect them from terminal 4 and 5 underneath the boiler and refit the link wire (see fig. 31).

Boiler will not light for D.H.W. or C.H.
The fault is likely to be a component common to both services. Open a hot tap to create a demand - is there a spark at the ignition electrode?

Yes Suspect gas supply, pressure or gas valve.

No Is fan running?

Yes Suspect air pressure switch or overheat stat (if boiler lockes out without sparking go to overheat stat)

No Is low water pressure light on?

Yes Top up water to above 1 bar. Does the light go out? (if water pressure o/k suspect high limit stat)

Yes Does fan start?

Yes Does boiler light?

Yes Is hot water OK?

Try heating, if heating does not work follow guide for heating faults. Does low water pressure light go out?

No Suspect low water pressure switch.

If boiler still does not fire see comprehensive fault finding chart.

8.04 Temperature sensors (thermistors)

Identical, but individual, negative temperature co-efficient (NTC) thermistors are fitted in the C.H. and D.H.W. outlets from the heat exchanger. As the water temperature increases the resistance in the thermistor decreases. This causes the PCB to reduce the voltage to the modureg, in turn reducing the burner pressure. The wiring for each thermistor is colour coded red for C.H. and blue for D.H.W. The sensors are fitted in wet pockets.

8.05 Limit thermostats

Two surface mounted auto reset bi-metal thermostats are located on the heat exchanger secured by spring clips. Heat sink compound is used.

8.06 Ignition PCB

Located to the right hand side of the electrical control compartment accessed by lowering the facia then removing the rear cover.

8.07 Main printed circuit board

Secured by flour plastic tabs the PCB is situated inside the control compartment. The transformer for low voltage AC is attached to the PCB as is the DC rectifier. Potentiometers control C.H. output and maximum D.H.W. temperature, both are adjustable by the controls on the facia and because the boiler features automatic range rating no adjustments need to be made. Electro mechanical relays control pump operation and put switched live to the ignition PCB (demand relay), they have transparent plastic covers so that their contacts can be seen moving.

8.08 Air pressure switch

Operating at 230 V AC and situated next to the fan. Different coloured tubes connect the switch to the fan. It is a make on pressure switch and only uses two terminals, the middle terminal is not used.

8.09 Short spares list

KEY NO. (from fig 2)	DESCRIPTION	PART NO.	G.C. NO.
14	Safety Valve	800130	386-816
16	Fan	800480	E23-851
34	Central Heating Flow Temperature Sensor	800320	E23-839
42	Domestic Hot Water Flow Temperature Sensor	800320	E23-839
43	Air Pressure Switch	800150	E23-840
44	Honeywell Gas Valve	800266	E23-768
49	Overheat Safety Thermostat 100°C	801270	386-815
50	High Limit Thermostat 88°C	800160	386-577
81	Ignition Electrode C/N fixing Bracket	806460	
82	Flame Sensing Electrode	801438	E23-855
136	Flow Meter	803430	E03-340
	Main PCB MF02	801873	E23-862
	Ignition PCB	800655	E23-848
27	Heat Exchanger	802180	E23-919

8.10 General test and fault finding

Chart 1
Check electrical supply - C.H. water pressure and frost protection

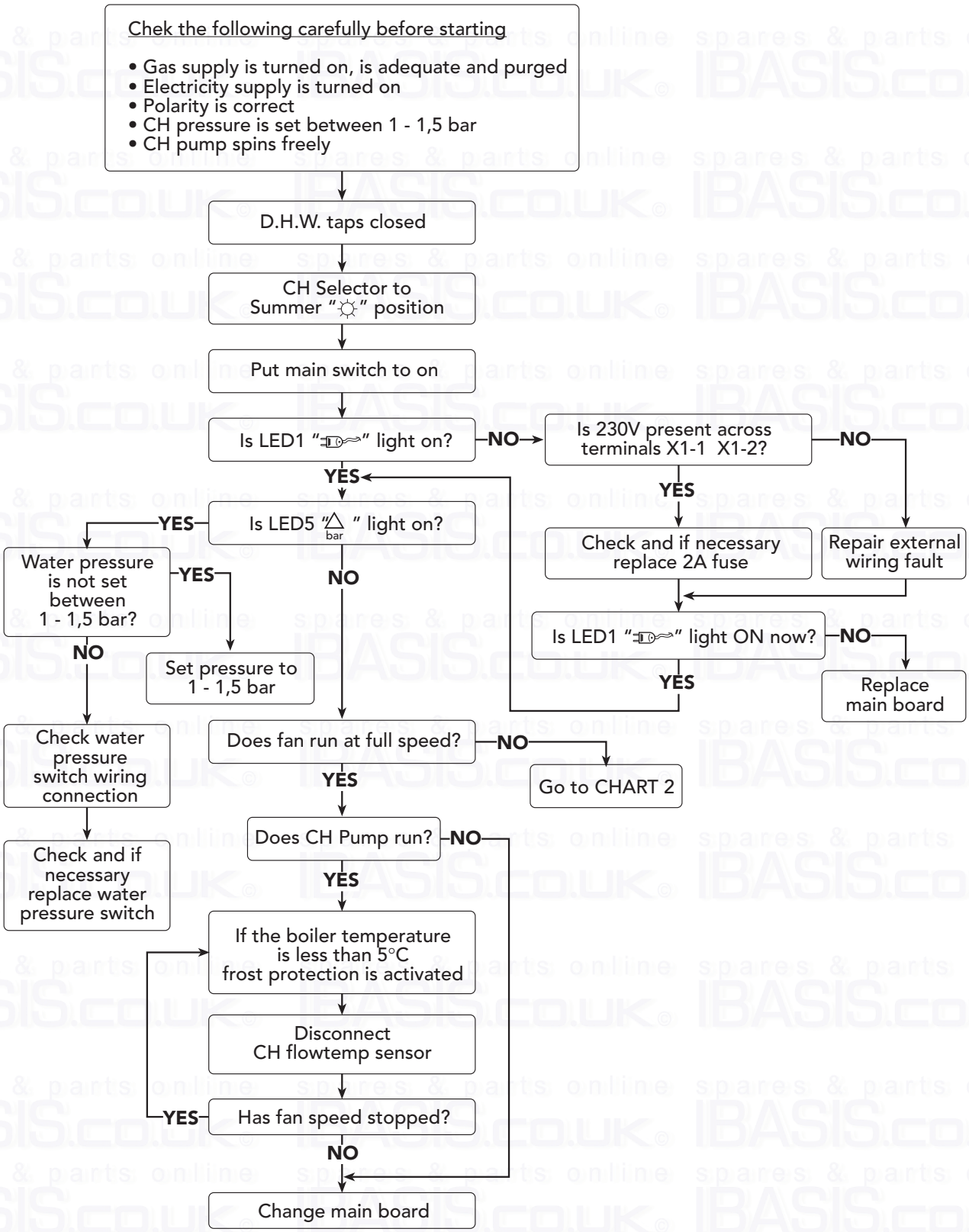

Chart 2
Check Domestic Hot Water operation

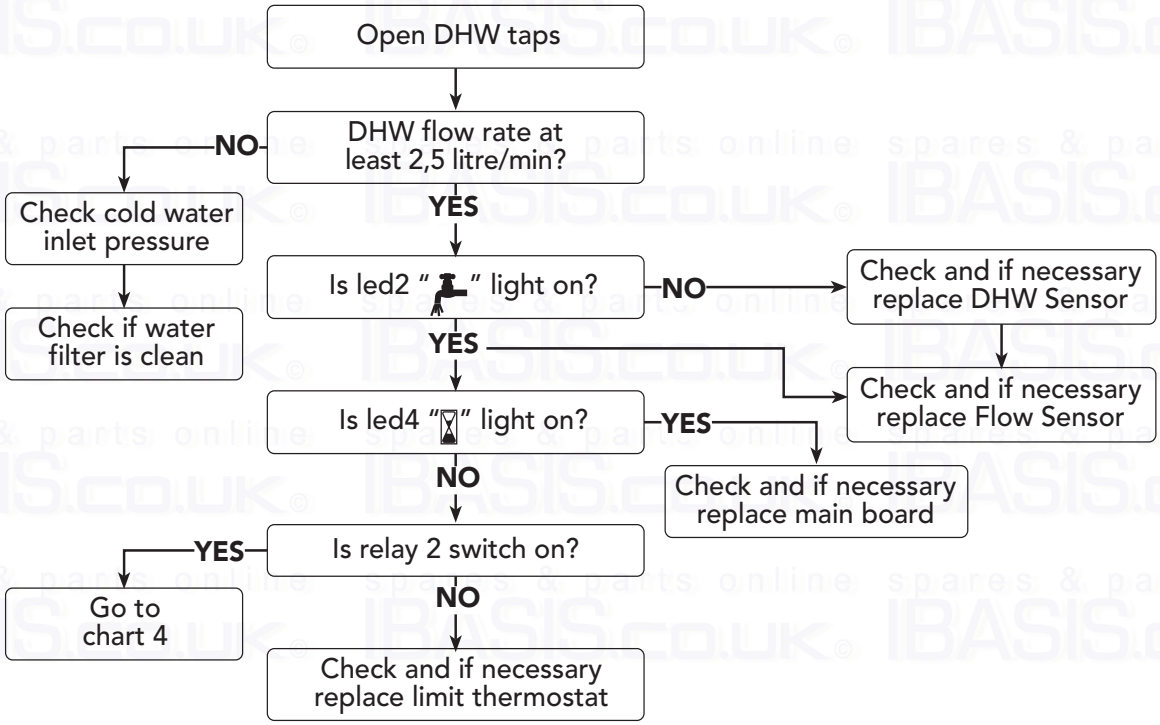

Chart 3
Check Central Heating operation

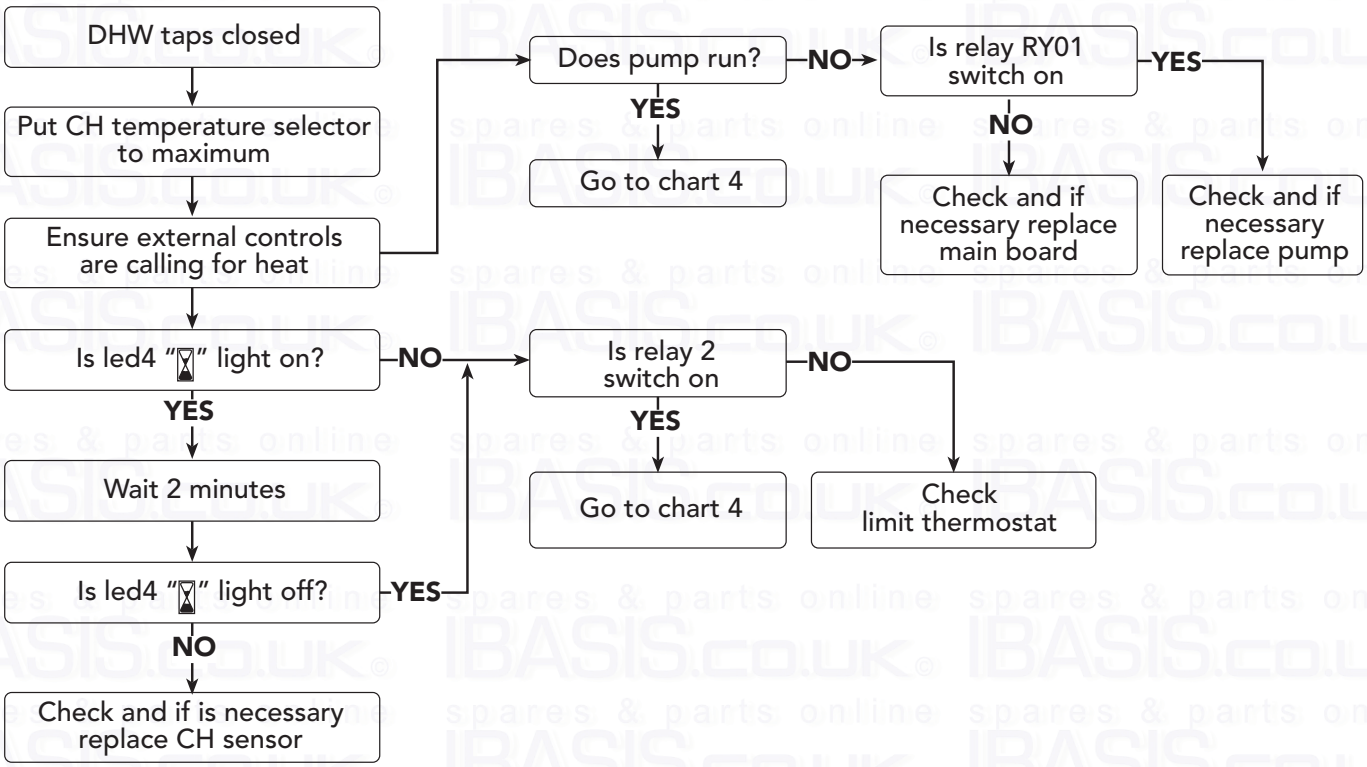

Chart 4
Check fan/flue gas system

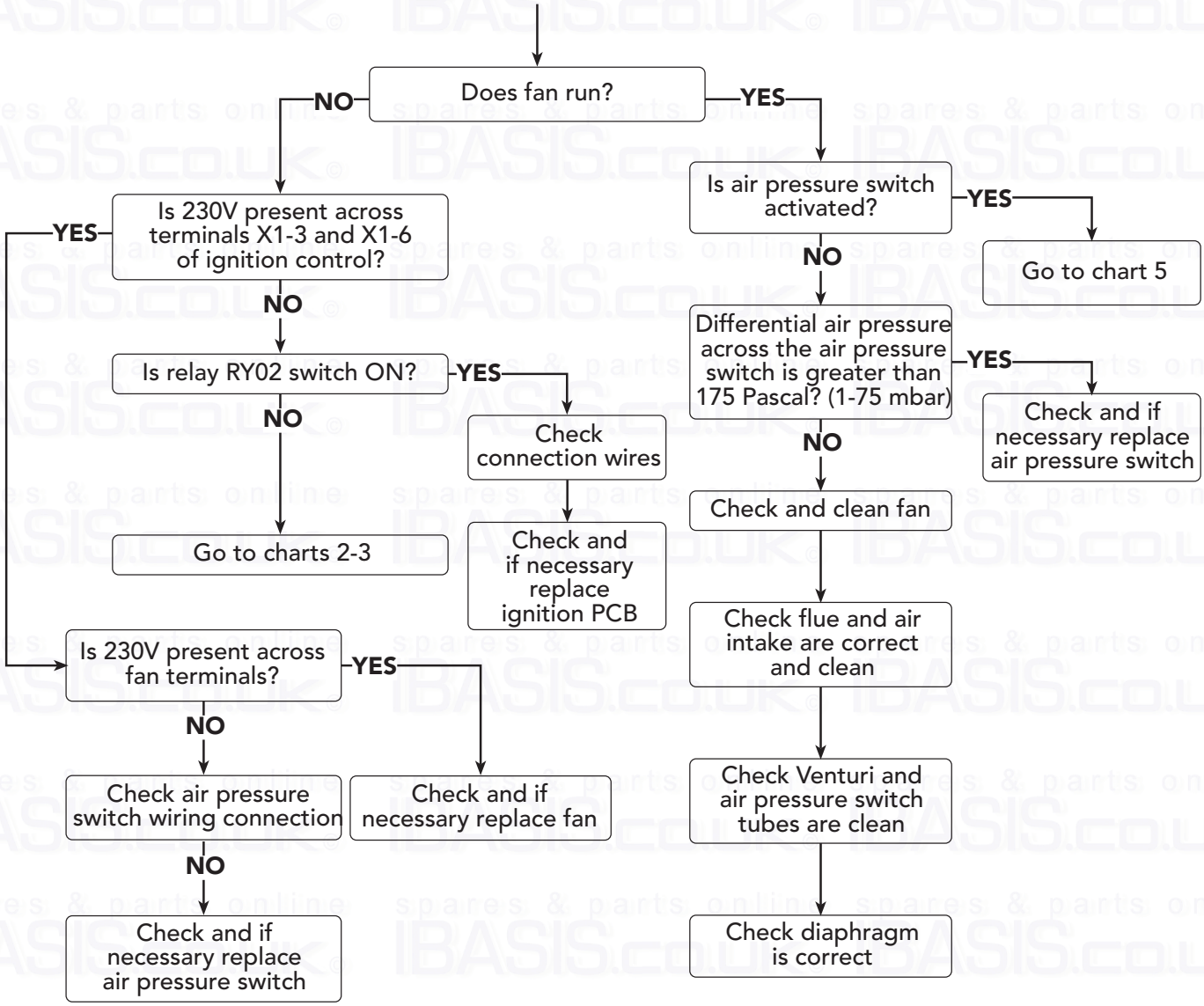

Chart 5
Check ignition system

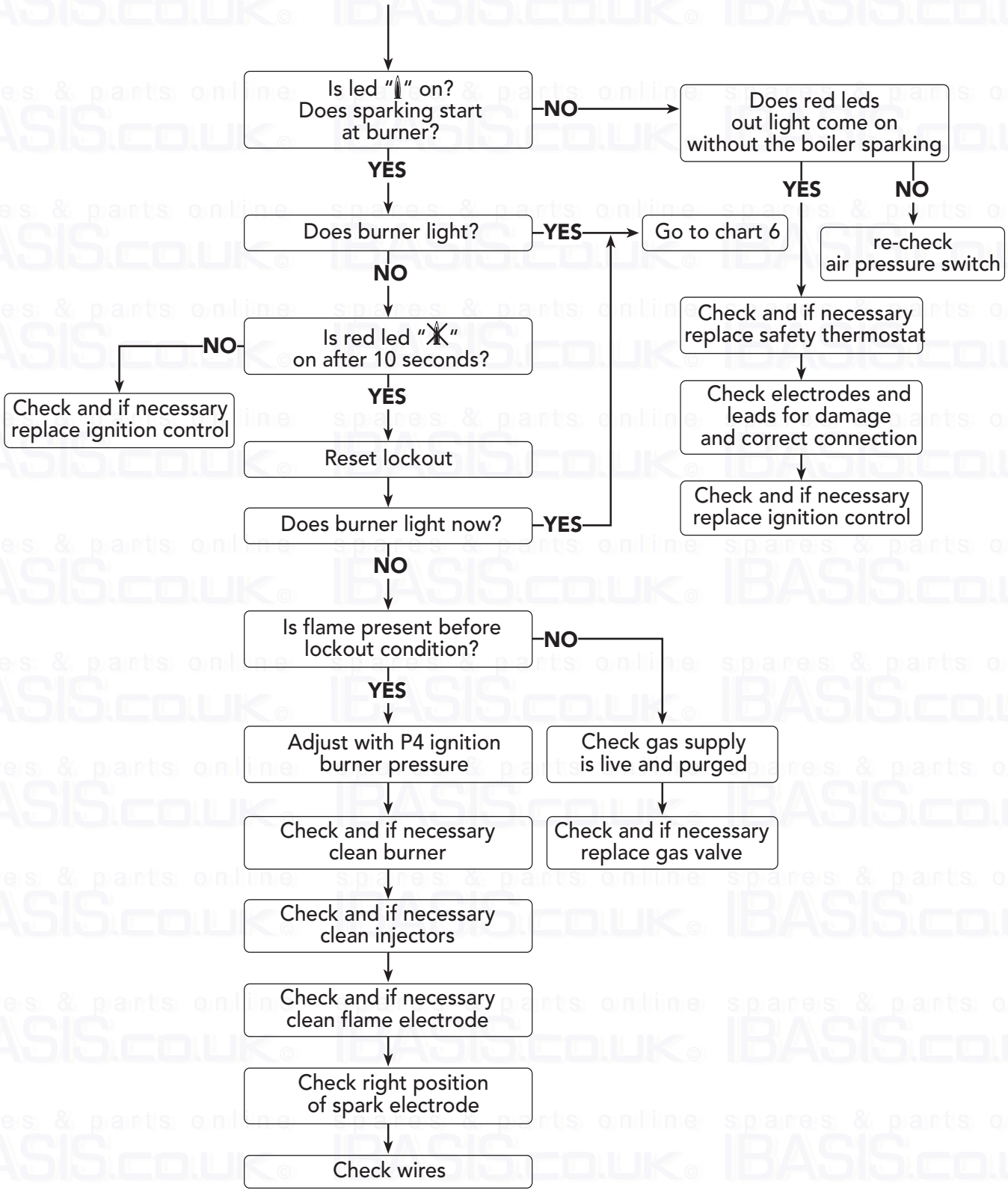

Chart 6
Check D.H.W. and C.H. modulation

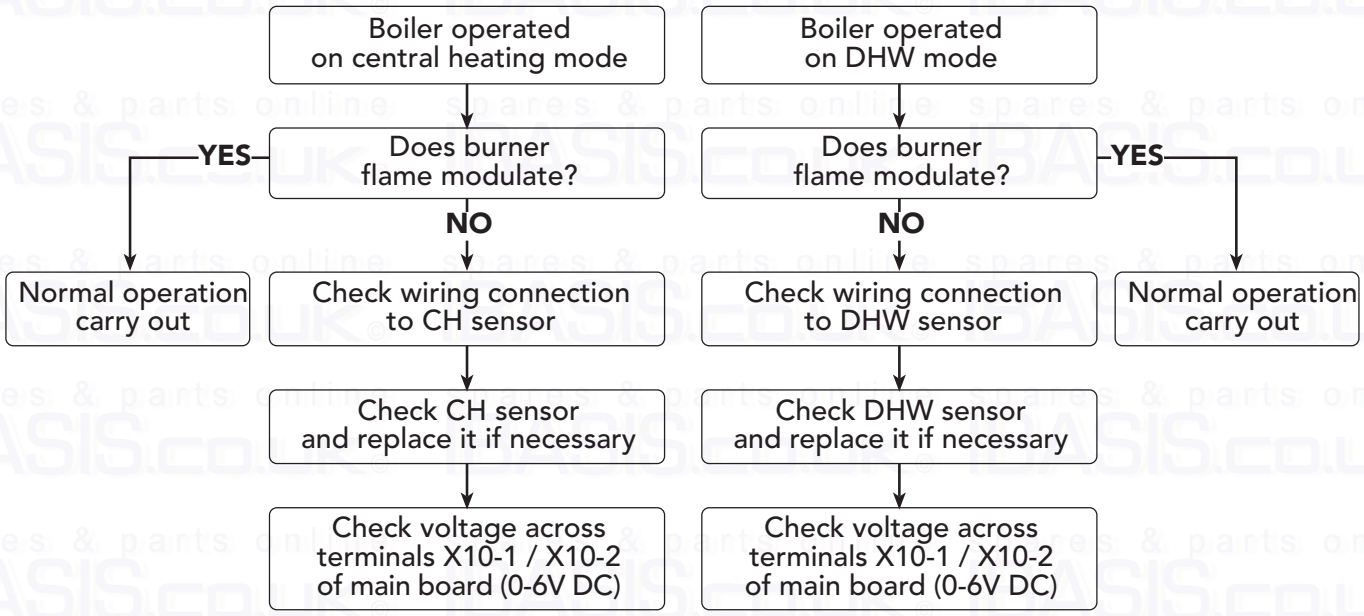

9. Electrical and functional scheme

9.01 Main components layout on electronic boards

Potentiometer adjustment	Location
P1 = Central heating flow temperature adjustment	P.C.B. main board
P2 = Domestic hot water temperature adjustment	P.C.B. main board
P3 = Central heating flow output adjustment	P.C.B. main board
P4 = Ignition gas pressure adjustment	Ignition control
P5 = Factory set	Ignition control

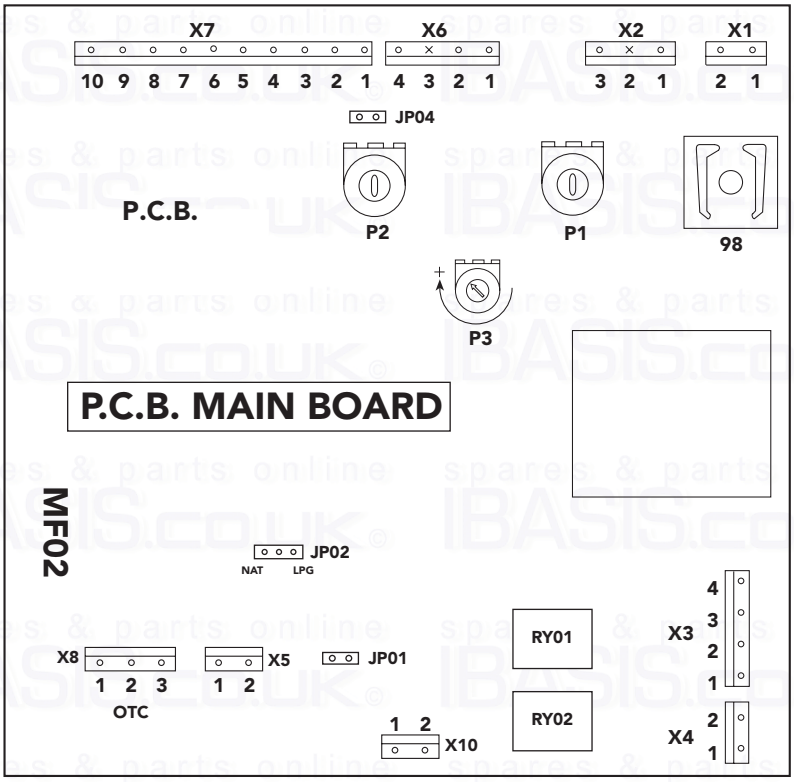

Fig. 46

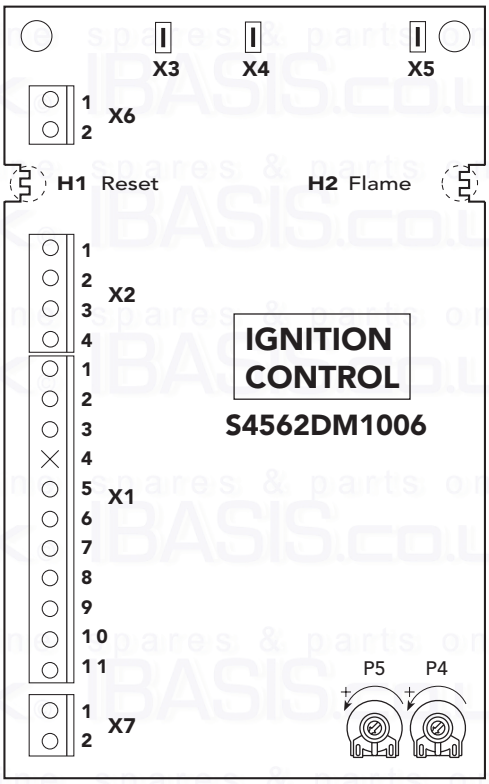

Fig. 47

JP01 ON = Delay between shutdown and re-ignition disabled
JP01 OFF = Delay between shutdown and re-ignition enabled

JP02:

Jumper on for natural gas

Jumper on for LPG

JP04 ON = Max temperature D.H.W. 62°C
JP04 OFF= Max temperature D.H.W. 55°C (standard)

Temp. sensor NTC (34) (42)	temp.	Ohm
	10 °C	20 kOhm
	25 °C	10 kOhm
	60 °C	2,5 kOhm
	80 °C	1,25 kOhm

9.02 General wiring diagram

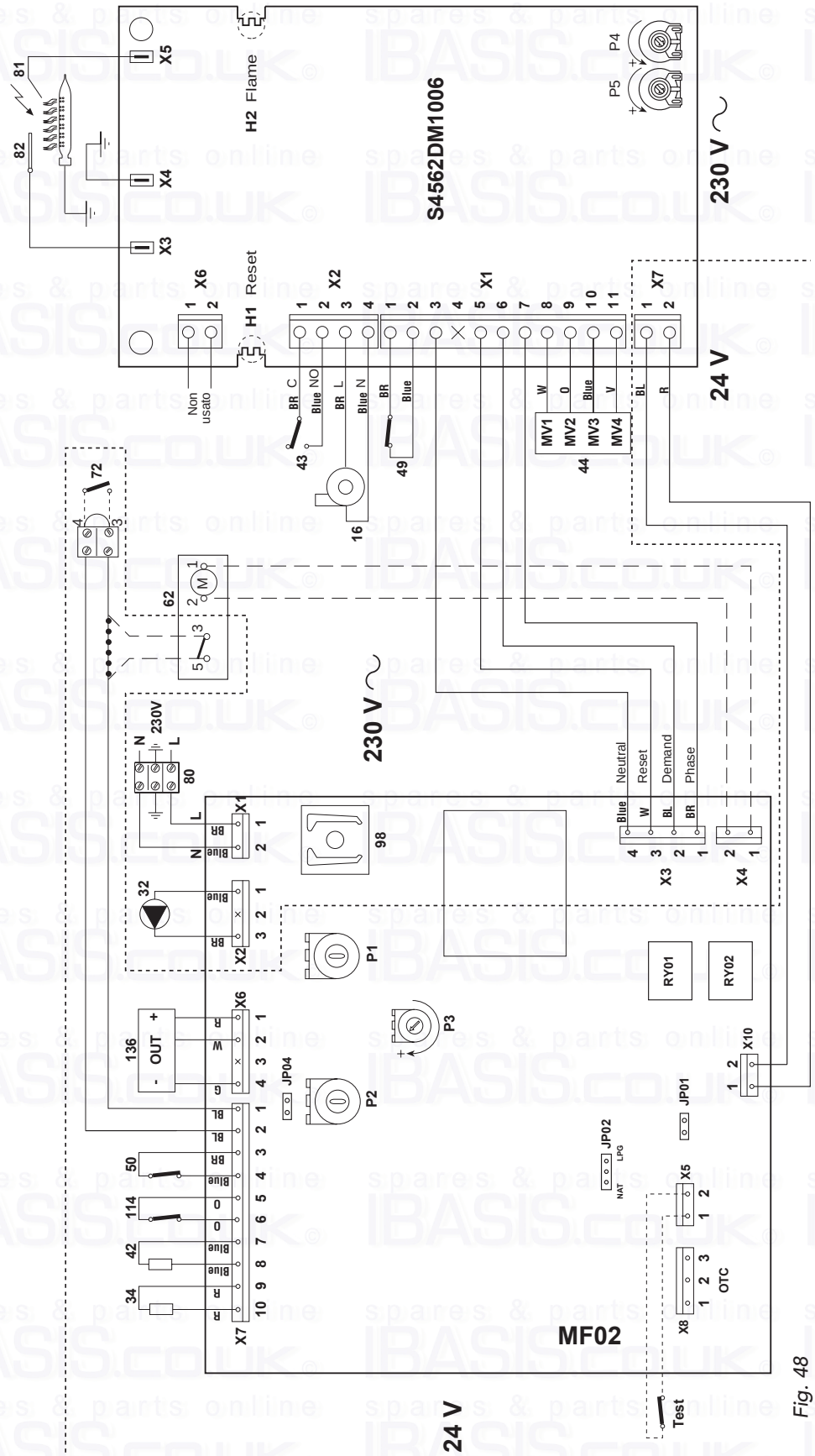

IMPORTANT

USE A ROOM THERMOSTAT (24 V) WITHOUT VOLTAGE TO THE CONTACTS. CONNECTING 230 V TO THE ROOM THERMOSTAT TERMINALS WILL IRREPARABLY DAMAGE THE ELECTRONIC BOARD.

Key

BR	*Brown*
BLUE	*Blue*
BL	*Black*
W	*White*
O	*Orange*
G	*Green*
R	*Red*
V	*Violet*

72 *Room thermostat*
81 *Ignition electrode*
82 *Sensor electrode*
98 *Off/On/Reset switch*
114 *Low water pressure switch*
136 *Flow meter*

Fig. 48

Key

16 *Fan*
32 *Central heating pump*
34 *Central heating flow temperature sensor*
42 *Domestic hot water flow temperature sensor*
43 *Air pressure switch*
44 *Gas valve*
49 *Safety thermostat*
50 *Central heating limit thermostat*
62 *Time clock (option)*

9.03 Functional flow diagram (MF02 + S4562DM1006)

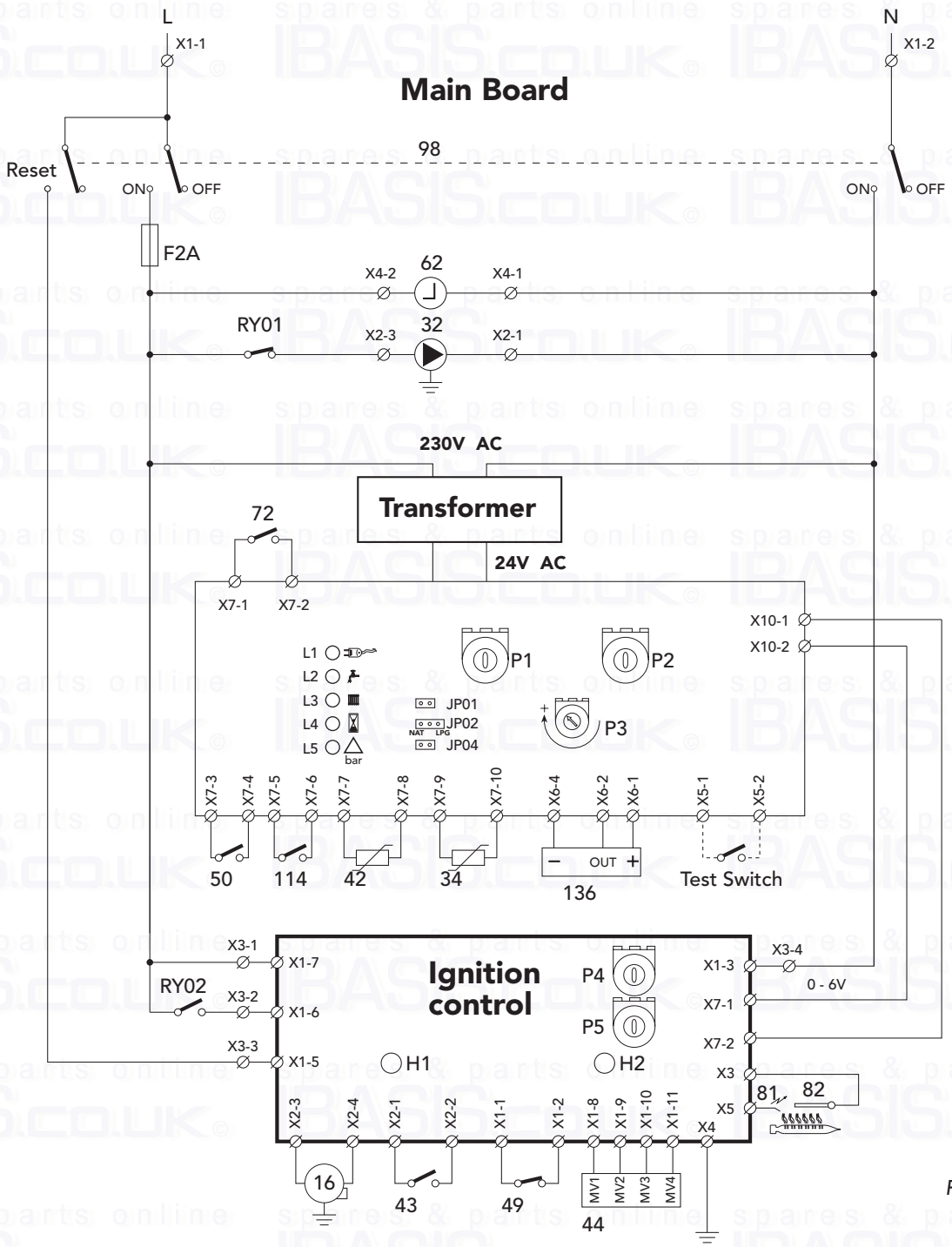

Fig. 49

Key

16 *Fan*
32 *Central heating pump*
34 *Central heating flow temperature sensor*
42 *Domestic hot water flow temperature sensor*
43 *Air pressure switch*
44 *Gas valve*
49 *Safety thermostat*
50 *Central heating limit thermostat*
62 *Time clock (option)*
72 *Room thermostat*
81 *Ignition electrode*
82 *Sensor electrode*
98 *Off/On/Reset switch*
114 *Low water pressure switch*
136 *Flow meter*

10. USER INSTRUCTIONS

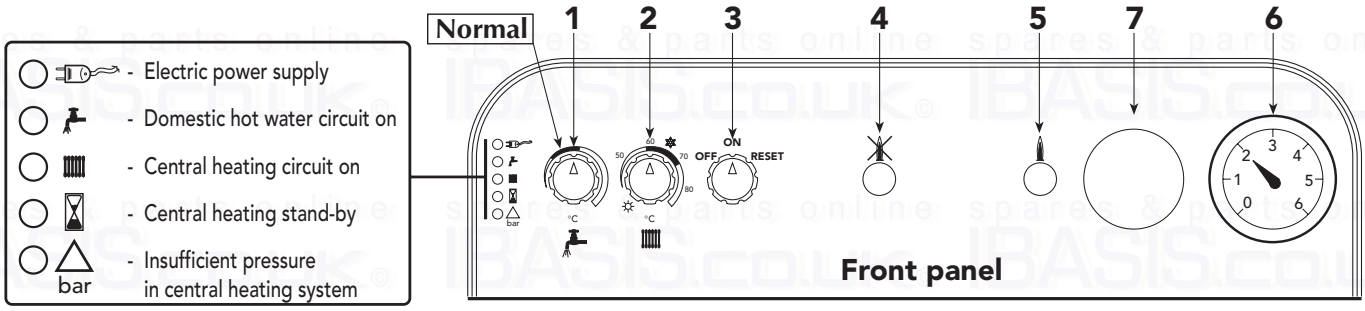

Fig. 50

Key
1 = D.H.W. temperature regulation (set on Normal position)
2 = Central heating flow temperature regulation
3 = Switch OFF/ON/RESET
4 = Boiler shut down warning
5 = Burner on indicator
6 = C.H. pressure gauge
7 = Time clock (option)

The boiler is designed for use with two types of gas: natural gas NG or propane (LPG). The type of gas can be selected when purchasing the boiler or the appliance can be converted later on site by a competent person. It operates with technologically advanced systems such as electronic adjustment, safety and control devices.
The boiler is fitted with automatic electronic ignition so there is no pilot to worry about.
Pull down cover to reveal control facia panel.
Make sure that the gas, water and electricity supplies to the boiler are turned on.
The boiler pressure gauge (6) should read at least 1 bar.
Low pressure will be indicated by the bottom red light on the left hand side of the facia illuminating (bar).

Hot Water Only - "SUMMER" ( )

To obtain hot water only from the boiler, turn switch (3) to the on position. The top green light on the left side of the control panel is illuminated (power on).

Turn the temperature regulator (2) to the position. Open a hot water tap, green light (tap symbol) comes on, fan starts and burner will light. Indicated by flame symbol, green light coming on. The temperature of the hot water can be adjusted by turning the hot water thermostat (1) clockwise to increase and anti-clockwise to decrease the water temperature.

Heating and Hot Water - "WINTER" ( )

To obtain heating from the boiler, turn the temperature regulator (2) clockwise to the maximum position, ensure that any other heating controls e.g. room thermostats, clock etc. are in the on position.

The boiler may be in heating delay of three minutes as indicated by the red light (egg timer symbol) on the left of the facia panel. When this light goes out the green light (radiator symbol) will come on. The fan and pump will run and the burner will light indicated by the green flame symbol light. Adjust the temperature regulator to the desired setting. (In winter do not run boiler below 50°C). If a hot water tap is opened whilst the boiler is running for heating the pump will stop, suspending the heating phase and the boiler will give priority to hot water production. When the tap is closed the boiler will go into a three minute delay cycle before resuming for heating.

Boiler lock out

In the event of the red lockout light ( ) coming on, the on/off/reset switch (3) should be turned clockwise against the spring tension to the reset position and released (this will put the boiler into three minute delay if in the heating mode). If the lockout light ( ) illuminates repeatedly, contact an approved Férroli service engineer.

Frost Protection

In cold weather the boiler may appear to run when there is no demand for heating (i.e. clocks or room thermostats turned off). This is due to the central heating sensor going into frost protection mode. Once the boiler has reached 14°C or more it will close down until either the temperature again falls below 7°C or the clock or room thermostat is turned on.

For this reason we recommend that the electricity to the boiler is left turned on. If you wish to turn off the electricity to the boiler in winter you should drain completely the heating and hot water circuits.

Cleaning

The casing requires no special cleaning, a wipe with a soft duster or damp cloth will suffice.

Maintenance

Férroli recommend that the appliance is serviced **at least once every twelve months** by a competent engineer.

Gas Supply

It is the law that all gas appliances are installed and serviced by a competent person in accordance with the Gas Safety Regulations (Installation & Use) 1996, and the manufacturers instructions. Failure to observe these requirements may lead to prosecution.

Electrical Supply

WARNING - This appliance must be earthed.

The electrical wiring must be carried out by a competent electrician.

The colours of the wires in the mains lead of this appliance may not correspond with the coloured markings identifying the terminal in the plug. Therefore, proceed as follows:

The wire coloured green and yellow must be connected to the terminal in the plug marked with either the letter E or by the earth symbol or coloured green or green and yellow. The wire coloured blue must be connected to the terminal marked either with the letter N or coloured black. The wire coloured brown must be connected to the terminal marked either with the letter L or coloured red.

MINIMUM CLEARANCE

The minimum clearance around the appliance should be as follows:

Sides	5mm	
Front	600mm	
Below	200mm	
Above	100mm	Top Flueing

Time Clock

A 24 hour time clock is fitted to the boiler to control the central heating, this will come into operation when the selector switch is turned to the position marked "heating timed and hot water".

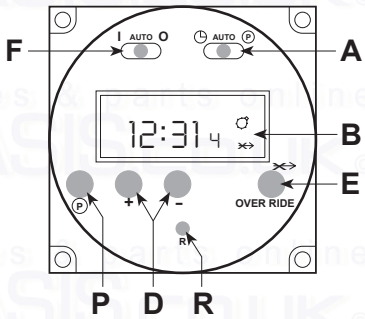

A	Slide switch: set clock - auto - set programme
B	Display. Symbol in Display = Timer ON
P	Select programme ON/OFF 1.....8
D	Push buttons Time + Time –
E	Override: Boiler will switch ON if it is OFF; and OFF if it is ON
F	I=Heating continuous - AUTO=Heating timed - O=Heating disabled
R	Reset (with pencil) only with switch **A** in set clock position

To set time of day

1. Slide switch (**A**) to left position
2. Using button + and – adjust until the correct time is shown on display (**B**).

Pre Set Programmes. The timer is pre programmed with 3 ON and 3 OFF times.

6:30 - 8:30
12:00 - 12:00
16:30 : 22:30

If these are suitable no programming is required and the slide switch (**A**) can be moved to the Auto position and the central heating will be ON for these periods. (12:00 - 12:00 will not switch on the boiler)

To Set Own ON and OFF times. Symbol in Display = ON time

1. Slide switch (**A**) to right position (**P**)

Display 6:30 1

2. Press button (**P**)

Display 8:30 2

3. Press button (**P**)

Display 12:00 3

4. Press button (**P**)

Display 12:00 4

5. Press button (**P**)

Display 16:30 5

6. Press button (**P**)

Display 22:30 6

7. The timer can be programmed with up to 8 ON and 8 OFF times by repeating the above procedure.

1.1 Use buttons + and - to set 1st ON time eg. 6:00

Display 6:00 1

2.1 Use buttons + and - to set OFF time, eg. 9:00

Display 9:00 2

3.1 Use button + and - to set 2nd ON time, eg. 12:30

Display 12:30 3

4.1 Use button + and - to set 2nd OFF time eg. 14:00

Display 14:00 4

5.1 Use button + and - to set 3rd ON time, eg. 16:00

Display 16:00 5

6.1 Use button + and - to set 3rd OFF time eg. 23:30

Display 23:30 6

8. On completion of programming slide switch (**A**) to Auto position, the time of day will be displayed and the central heating will switch ON and OFF according to the programme set.

Over ride

By pressing the over ride button (**E**) the timer programme is over ridden ie, if programme is in OFF time it will come ON and if in ON time will go OFF.

The timer will revert back to it set programme on reaching the next ON or OFF time.

When the programme is on over ride the sign ⤫ will be shown in the display window (**B**).

Reset Button

By the use of a pencil the reset button can be pushed (**R**). This will clear all programmes apart from those factory pre set.

Reset is only possible with switch (A) in set Clock position!

Should you require help with any difficulties call our Technical Service Helpline on

0121 352 3200

Phone numbers:

Installer _____

Service Engineer _____

BECAUSE OF OUR CONSTANT ENDEAVOUR FOR IMPROVEMENT DETAILS MAY VARY SLIGHTLY FROM THOSE QUOTED IN THESE INSTRUCTIONS.

FERROLI S.p.A.

ALL SPECIFICATIONS SUBJECT TO CHANGE

Please note - to avoid incurring unnecessary expense, in the event of a boiler shut down, check this in not caused by lack of electricity supply, gas supply or low water pressure before calling our Customer Service Helpline.

Stockton Close, Minworth Industrial Park, Minworth, Sutton Coldfield, West Midlands B76 8DH

Tel: 0121 352 3200 Fax: 0121 352 3210