FERROLI

MAXIMA 35 S

WALL-MOUNTING GAS BOILER, PRE-MIXED CONDENSING SYSTEM BOILER

Seasonal Efficiency (SEDBUK) band A (91,0%)

INSTRUCTIONS FOR USE, INSTALLATION AND MAINTENANCE

CE

G C N° 47-267-21

Appr. nr. B02.01 - CE 0063 BO 3924

code 3544786/0 ed. 01/2004

IMPORTANT

Your "benchmark" Installation, Commissioning and Service Record Log Book will be enclosed in your customer information pack.
"This record must be completed and left with the end user".
Ferroli is a member of the Benchmark initiative and fully supports the aims of the programme. Benchmark has been introduced to improve the standards of installation and commissioning of central heating systems in the UK and to encourage the regular servicing of all central heating systems to ensure safety and efficiency.
Please see installation and servicing guidelines.

⚠	This symbol indicates "Caution" and is placed next to all safety information. Strictly follow these instructions in order to avoid danger and damage to persons or property.
☞	This symbols calls attention to a note or important information, please read thourougly.

⚠

- Read the warnings given in this manual thoroughly. They provide important information for safe installation, use and maintenance
- The instruction manual, by law must be left with the end user.
- If the appliance is sold or transferred to another owner or if the owner moves, leaving the appliance behind, always ensure that the manual is kept with the appliance for consultation by the new owner and /or installer.
- Incorrect installation or poor maintenance absolves the manufacturer from all liability for damage to persons and property.
- Installation and maintenance must be carried out in accordance with current legislation, according to the manufacturer's instructions and by qualified corgi registered engineer.
- Before service or maintenance work is carried out isolate the appliance from the mains electricity supply.
- In the event of malfunction or faulty operation, isolate the appliance. Do not attempt to repair or carry out any other operation on the appliance directly. Contact Ferroli or a qualified engineer only.
- Repairs or the replacement of components must be carried out exclusively by qualified personnel using original spare parts only. Failure to adhere to the above may compromise the safety of the appliance.
- To guarantee efficient operation, the appliance must be serviced once a year by a Corgi registered engineer.
- The appliance may not be used for purposes other than those for which it was explicitly designed.
- Incorrect installation and use or failure to follow the instructions provided by the manufacturer absolve the manufacturer from all liability for damage.
- After unpacking, check that the contents are correct and undamaged.
- Keep packing out of reach of children as it could be potentially hazardous.
- To clean external parts, use a damp cloth moistened with soapy water if necessary. Avoid using abrasive cleaning products and solvents.

Declaration of conformity

CE

Manufacturer: FERROLI S.p.A.
Address: Via Ritonda 78/a 37047 San Bonifacio VR Italy
declares that this unit complies with the following EU directives:

- Gas Appliance Directive 90/396
- Efficiency Directive 92/42
- Low Voltage Directive 73/23 (amended by 93/68)
- Electromagnetic Compatibility Directive 89/336 (amended by 93/68)

President and Legal Representative
Cav. del Lavoro
Dante Ferroli

1. OPERATING INSTRUCTIONS 4

1.1 Introduction 4
1.2 Control panel 5
1.3 Turning ON and OFF 7
1.4 Adjustments 7
1.5 Maintenance 7
1.6 Faults 7

2. INSTALLATION 8

2.1 General Instructions 8
2.2 Boiler location 9
2.3 Boiler water connections 10
2.4 Connection to the gas system 12
2.5 Electrical Connections 12
2.6 Flue system 15
2.7 Condensate outlet connection 21

3. SERVICE AND MAINTENANCE 23

3.1 Adjustments 23
3.2 Initial start-up 24
3.3 Maintenance 25
3.4 Troubleshooting 27

4 TECHNICAL CHARACTERISTICS AND DATA 29

4.1 Dimensions and connections 29
4.2 General view and main components 30
4.3 Hydraulic diagram 31
4.4 Technical data table 32
4.5 Diagrams 33
4.6 Wiring diagram 34

1. OPERATING INSTRUCTIONS

1.1 Introduction

Dear Customer,

Thank you for choosing Maxima 35 S, a FERROLI wall-mounted boiler of the latest generation, featuring advanced design and cutting-edge technology.

Maxima 35 S is a high-efficiency condensing pre-mix appliance for heating with extremely low emissions, running on natural gas or LPG.

The boiler consists of an aluminium laminar heat exchanger providing effective condensation of the water vapour contained in the flue gases, permitting extremely high efficiency.

Above the heat exchanger, in the boiler, there is a pre-mix burner, with a large ceramic surface, equipped with electronic ignition and ionization flame control, which achieves extremely low emissions while ensuring high reliability and long life operation.

The boiler is totally room sealed from the installation room: the air needed for combustion is drawn from outside. The boiler also includes a modulating speed fan, modulating gas valve, pump, expansion vessel, safety valve, temperature sensors, a safety thermostat and a low pressure sensor.

Thanks to the twin microprocessor control and adjustment system with advanced self-diagnosis, unit operation is for the most part automatic. The power for heating is automatically governed by the control system.

The user only has to set the temperature desired inside the home by means of a room thermostat and appliance temperature control. The adjustment and control system will provide optimum operation throughout the year.

The display continuously provides information on the unit's operating status and it is easily possible to obtain additional information on the sensor temperatures, set-points, etc. or configure them. Any operating problems associated with the boiler or system is immediately signalled by the display and, if possible, corrected automatically.

1.2 Control panel

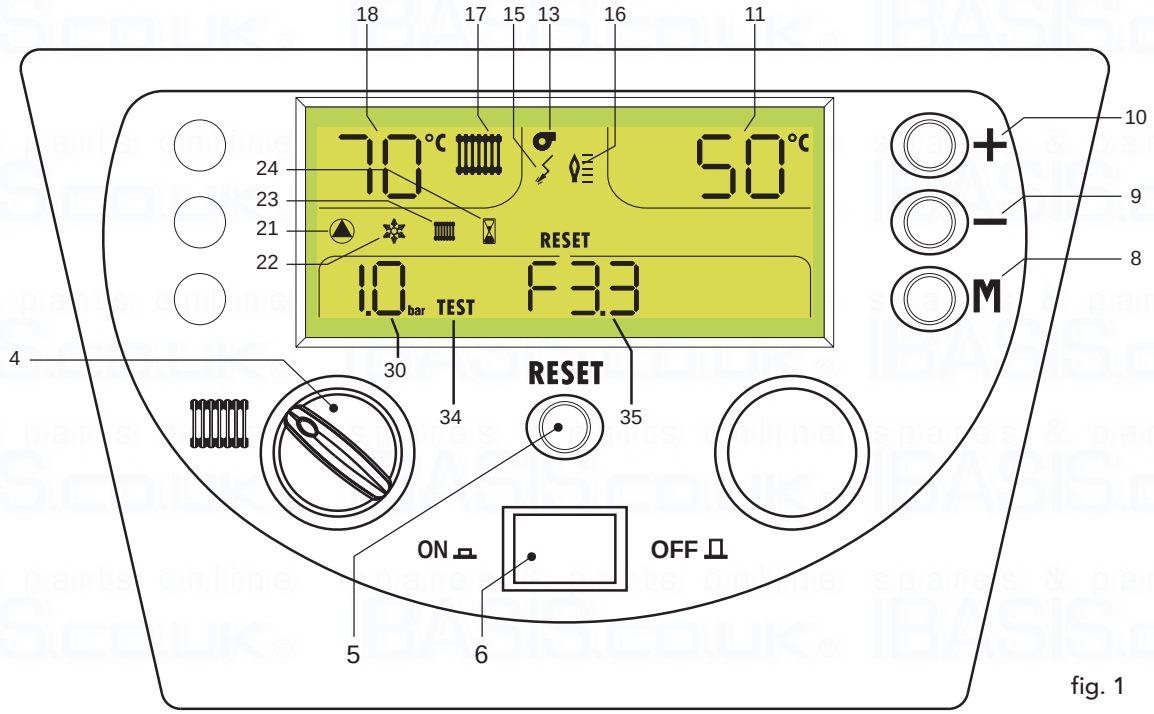

fig. 1

4 - Heating temperature adjustment control

To increase the heating temperature, turn the knob clockwise; anticlockwise to decrease it.
The adjustment range goes from 20 to 90°C (see page 7).

5 - RESET key

The Reset key is used to reset boiler operation when it has shut down.
To reset the boiler, press Reset (5 - fig. 1).
The shutdown condition is indicated by a fault code flashing and RESET being displayed.

6 - Power key

Turning the boiler on and off (on - green light on button pushed in).

8 - Mode key

Multifunction key.

9 - MINUS key

The MINUS key is used, toghether with PLUS key, to enter/exit the INSTALLER TEST mode (15mins).

10 - PLUS key

The PLUS key is used, toghether with MINUS key, to enter/exit the INSTALLER TEST mode (15mins).

11 - Return heating temperature display

In stand-by mode, the display shows the temperature of the return heating leaving the boiler.

13 - Fan symbol

This appears when there is a call for heating, and the fan is operating.

15 - Ignition symbol

The ignition symbol appears during the ignition phase.

16 - Flame symbol

Indicates the burner is on, the small rising bars to the right indicate the burner output 1=low, 5=high.

17 - Radiator symbol

Displayed during demand or when the appliance is in standby.

18 - Flow heating temperature display

During operation, the display shows the temperature of the heating water leaving the boiler. When operating knob "4" the display briefly shows the adjustment temperature being set (see page 7 section 1.4 adjustments).

21 - Heating pump symbol

Displayed when the heating pump is operating.

22 - Appliance Frost protection

This appears when the boiler automatically comes on in frost protection, that is when the appliance temperature drops under 5°C.

The appliance shuts down when it reaches a flow temperature of 15°C.

23 - Symbol showing demand for heating

Displayed when the appliance has a demand from external controls.

24 - Delay time symbol

Displayed when the appliance is in Stand-by after the set point operating temperature is achieved.

30 - System pressure display

Displays the heating system pressure (see page 11).

34 - TEST symbol

Boiler operating in TEST mode (full power). To turn on TEST mode, hold down the "+" and "-" keys for 3 seconds. Press the "+" and "-" keys for another 3 seconds to exit. TEST operation turns off automatically after 15 minutes (Boiler operates at 100% whilst in test mode).

35 - Fault and parameter display

Displays any fault code if they should occur (see page 27 troubleshooting).

1.3 Turning ON and OFF

Ignition

- Open the gas isolation valve upstream of the boiler.
- Purge the air from the pipe upstream of the gas valve.
- Ensure power is on to appliance.
- Press the ON/OFF key in to turn on boiler (see fig. 1 Item 6).
- The boiler is now ready to function automatically whenever the externals controls are calling.

Turning off

Press the ON/OFF key (see fig. 1 Item 6).

When the boiler is turned off with this button, the P.C.B. is no longer powered and the frost protection will be disabled.
Close the gas cock upstream of the boiler and disconnect the electrical power supply.

To avoid damage caused by freezing during long shutdowns in winter, it is advisable to drain all water from the boiler, the tap water and the system water.

1.4 Adjustments

Room temperature adjustment (with a room thermostat)

Using the room thermostat, set the temperature desired in the room. Controlled by the room thermostat, the boiler lights and heats the system water to the system setpoint temperature. The burner shuts down when the desired temperature in the room is reached.

A room thermostat & programmer is a mandatory requirment (building regs Doc "L" 2002).

C.H. temperature adjustment

To set the system flow temperature, use the C.H. control knob. Turning it clockwise increases the temperature, turning it anticlockwise decreases it.

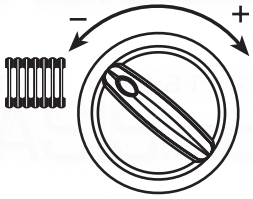

When adjusting the control knob the display will flash for 5 seconds and display the set point temperature. It will then revert to showing actual temperature.

1.5 Maintenance

It is strongly recommended to carry out annual maintenance on the boiler and the heating system. Please refer to the "maintenance" section in this manual.

The casing, the control panel and the aesthetic parts of the boiler can be cleaned using a soft and damp cloth. Do not use abrasives or solvents.

1.6 Faults

In the unlikely event of an operating problem or component failure, the display flashes and a fault identification code appears.

Faults marked with the letter "F" cause temporary shutdowns that are automatically reset as soon as the value comes back within the boiler's normal working range.

If together with the fault the display also shows RESET, the user must reset boiler operation by pressing the key RESET (5 - fig. 1). The ignition cycle will thus be repeated.

If the problem remains after two attempts at resetting, contact the Ferroli Service Centre.

For other faults, refer to page 27 section 3.4 "Troubleshooting."

Before calling the Ferroli service centre, check that the problem is not due to an installation error or a problem with the gas/electricity or low water pressure in the system.

2. INSTALLATION

2.1 General Instructions

This device must only be used for the purpose for which it is specially designed. This unit is designed to heat water to a temperature below boiling point and must be connected to a heating system and/or a water supply system for domestic use, compatible with its performance, characteristics and its heating capacity. Any other use is considered improper.

BOILER INSTALLATION MUST ONLY BE PERFORMED BY QUALIFIED PERSONNEL, IN ACCORDANCE WITH ALL THE INSTRUCTIONS GIVEN IN THIS TECHNICAL MANUAL, THE PROVISIONS OF CURRENT LAW, THE RECOMENDATION OF BS STANDARDS, ANY LOCAL REGULATIONS AND THE RULES OF COMPEDENT WORKMANSHIP.

Incorrect installation can cause damage or physical injury for which the manufacturer declines any responsibility.

This appliance must be installed strictly in accordance with these instructions and regulations:

The Gas Safety Regulations (Installations & Use).
The Local Building Regulations.
The Building Regulations (Part L).
The Buildings Standards (Scotland - Consolidated) Regulations.
British Standards Codes of Practice:

B.S. 5440 Part 1 Flues
B.S. 5440 Part 2 Air supply
B.S. 5449 FORCED CIRCULATION HOT WATER SYSTEMS
B.S. 6798 INSTALLATION OF GAS FIRED HOT WATER BOILERS
B.S. 6891 GAS INSTALLATIONS
B.S. 7671 IEE WIRING REGULATIONS
B.S. 4814 SPECIFICATION FOR EXPANSION VESSELS
B.S. 5482 INSTALLATION OF LPG
B.S. 7593 TREATMENT OF WATER IN DOMESTIC HOT WATER CENTRAL HEATING SYSTEMS
B.S. 5546 INSTALLATION OF HOT WATER SUPPLIES FOR DOMESTIC PURPOSES

Model Water Bye Laws
B.S. 5955-8 PLASTIC PIPEWORK INSTALLATION

For Northern Ireland the rules in force apply

2.2 Boiler location

The unit's combustion circuit is sealed off from the installation room. The installation room must be sufficiently well ventilated to prevent any dangerous conditions from forming in the event of even slight gas leakage. This safety standard is required by the EEC Directive no. 90/396 for all gas units, including those with a so-called sealed chamber.

Therefore the place of installation must be free of dust, flammable materials or objects or corrosive gases. The room must be dry and not subject to freezing.

The boiler is design to be installed on a solid wall. The wall fixing must ensure a stable and effective support for the appliance, using the bracket and fixings supplied.

If the unit is enclosed in cupboard or mounted alongside, there must be space for normal maintenance work. Fig. 2 and tab. 1 give the minimum clearances to leave around the unit.

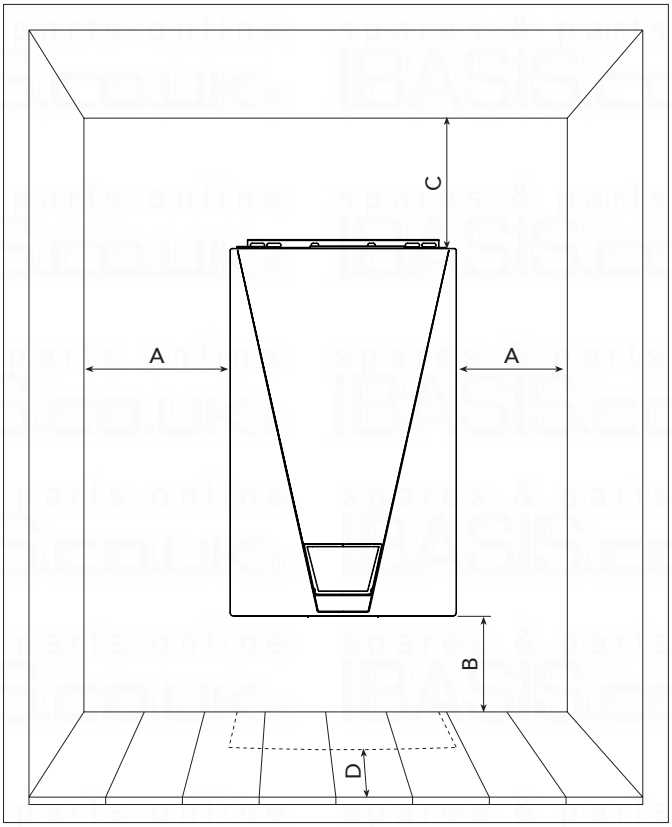

fig. 2

Table 1	
	Minimum
A	2,5 cm
B	20 cm
C	40 cm
D	60 cm (via an openable panel)

2.3 Boiler water connections

The heating capacity of the unit should be previously established by calculating the building's heat requirement according to current regulations. For good operation and long life of the boiler, the plumbing system must be well proportioned and always complete with all those accessories that guarantee regular operation and running, room thermostat, trv's and automatic bypass etc.

If the flow and return pipes follow a path where air pockets could form in certain places, it is esential to install vent valves at these points. Also, install type "A" drain cocks at the lowest points in the system to allow complete draining.

The temperature differential between the flow manifold and the return to the boiler should not exceed 20° C.

A minimum flow of 6 litres/min is requied through the heat exchanger, it is therefore essential to fit a automatic bypass a min of 3 meters away from the appliance, calobrated on site.

⚠ Do not use the water system pipes to earth electrical appliances.

Before installation, carefully flush all the pipes of the heating system to remove residues or impurities that could affect the unit's operation (BS 7593 Building regs Doc L).

Make the connections to the appliance as shown in fig. 3.

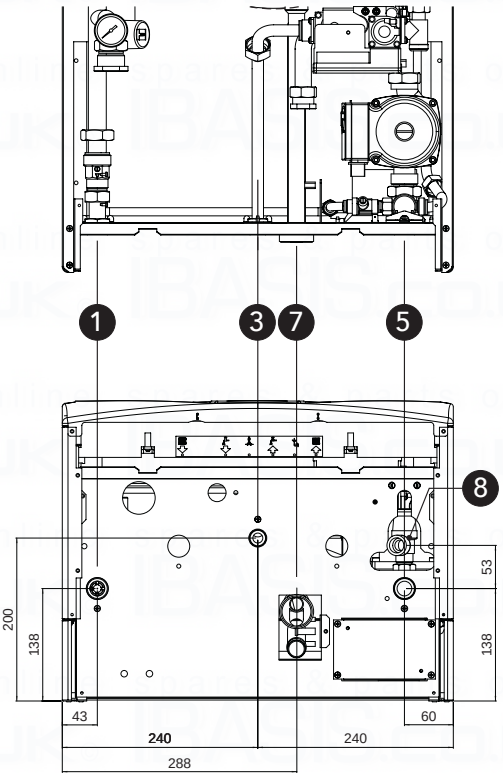

Key

1 System flow (22 mm with isolation valve fitted)
3 Gas inlet (22 mm with isolation valve fitted)
5 System return - 22 mm with isolation valve fitted (c/w filter)
7 Condense outlet
8 Safety valve discharge 1/2" f/l

fig. 3

It is essential to install the isolation valves supplied between the boiler and heating system, allowing the boiler to be isolated from the system if necessary.

⚠ The safety valve outlet must be connected to a 15 mm diameter copper pipe (with a continual fall from the boiler) to allow system water out onto the ground in the event of over-pressure in the heating circuit. If this is not done, and the drain valve trips and floods the room, the boiler manufacturer is not to be held responsible. The outlet should face back against the outer brickwork or building face to prevent harm or injury from hot water discharging in the evet of an over-pressuried system.

Make the boiler connection in such a way that its internal pipes are free of stress. If a check valve is installed on the tap water circuit (where applicable), it is necessary to mount a safety valve between the boiler and this circuit (check valve minimum 3 meters from boiler).

The Isolation valve kits shown in fig. 4 are supplied as standard.

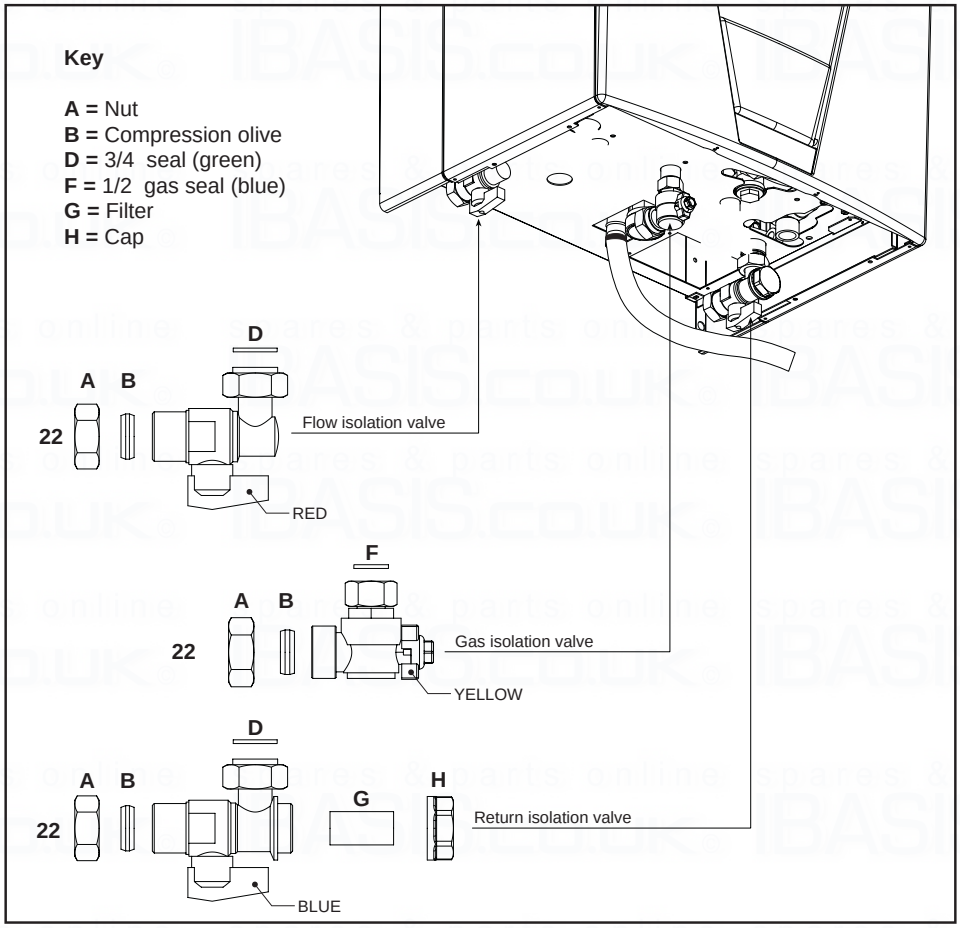

fig. 4

Make Up Water

Provision must be made for replacing water lost from the sealed system. Reference should be made to BS6798, for methods of filling and making up sealed systems. There must be no direct connection between the boiler's central heating system and the mains water supply. The use of mains water to charge and pressurise the system directly, is conditional upon the Local Water Byelaws. Again any such connection must be disconnected after use. Ensure the filling point is on the return pipe to the boiler.

Fittings manufactured from duplex (alpha-beta) brass are not acceptable for underground use and certain water undertakings will not accept their use above ground.

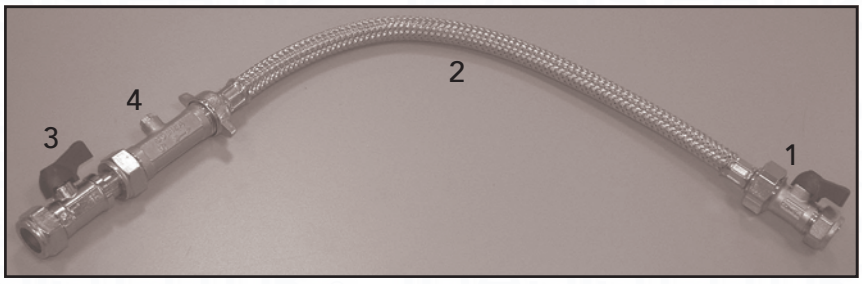

Key

1. C.H. filling valve.
2. Temporary connection.
3. Cold water supply valve.
4. Double check valve.

Fig. 5

Water treatment

When treatment is used ferroli limited only recommend the use of proprietary Brand, such as Fernox or Sentinel water treatment products, which must be used in accordance with the manufactures instructions. for further information contact:

Feronx Manufacturing Co. LTD.	Sentinel Division
Tandern house, Marlowe Way	Betz Dearborn LTD
Croydon, surrey, CRO 4YS	Widnes, Cheshire WA8 8ND
Tel: 0870 5601 5000	Tel: 0151 424 5351

Note - When the boiler is installed with an existing or new system any unsuitable additives or system debris must be removed by thorough cleansing. All systems should be cleansed according to B.S. 7593.

Note - In hard water areas treatment to prevent lime scale may be necessary.

Note - It is important that the correct concentration of the water treatment product is maintained in accordance with the manufacturers instructions.

2.4 Connection to the gas system

⚠ If necessary the local Gas supplier should be consulted, at the installation planning stage, in order to establish the availability of an adequate supply of gas.
An existing service pipe must not be used whitout prior consultation with the local Gas supplier.

A gas meter can only be connected by the Local Gas supplier, or by a Local Gas suppliers Contractor.

Installation pipes should be fitted in accordance with BS6891.

Appliance inlet working pressure must be 20 mbar MINIMUM, for NG and 37 mbar minimum for propane.

Do not use pipes of a smaller size than the combination boiler inlet gas isolation valve (22 mm).

The complete installation must be tested for gas soundness and purged as described in BS6891. All pipework must be adquately supported. An isolating gas valve is provided and should be fitted on the boiler gas inlet. Please wait 10 minutes when ligthing from cold before checking the gas rate. Gas pressures should be checked after the boiler has operated for 10 minutes to ensure thermal equilibrium.

The appliance has no facility to check burner pressures, a combuston test should be carried out instead, see page 26 (combuston analyser testing).

⚠ The Isolation valve kits shown in fig. 4 are supplied as standard.

2.5 Electrical Connections

The unit must be installed in conformity with current national and local regulations.

Connection to the electrical grid

The boiler must be connected to a single-phase, 230 Volt-50 Hz electric line.

⚠ The unit's electrical safety is only guaranteed when correctly connected to an efficient earthing system executed according to current safety standards. Have the efficiency and suitability of the earthing system checked by professionally qualified personnel. The manufacturer is not responsible for any damage caused by failure to earth the system. Also make sure that the electrical system is adequate for the maximum power absorbed by the unit, as specified on the boiler dataplate, in particular ensuring that the cross sectional area of the system's cables is suitable for the power absorbed by the unit.

The boiler is prewired and provided with a cable for connection to the electricity line. The connections to the supply must be made with a permanent connection and equipped with a double pole switch which

contacts have a minimum opening of at least 3 mm, and fused at max. 3A between the boiler and the line. It is important to respect the polarities (LIVE: brown wire / NEUTRAL: blue wire / EARTH: yellow-green wire) in making connections to the electrical supply.

Standard Systems

For a general pipe layout and wiring diagram on the "S" and "Y" plan systems please see fig. 6a, 6b, and 7a, 7b.

MAXIMA "S" Plan

Pipe layout

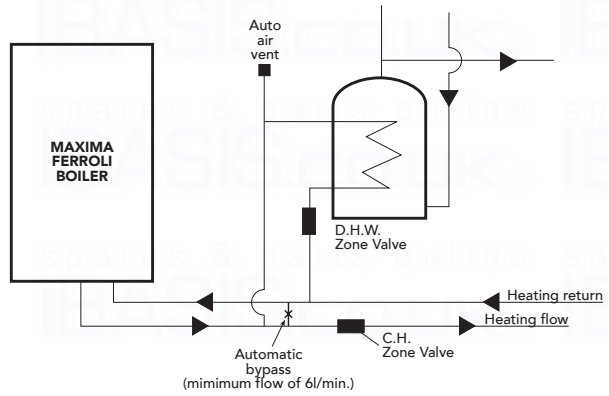

Fig. 6a

Wiring diagram

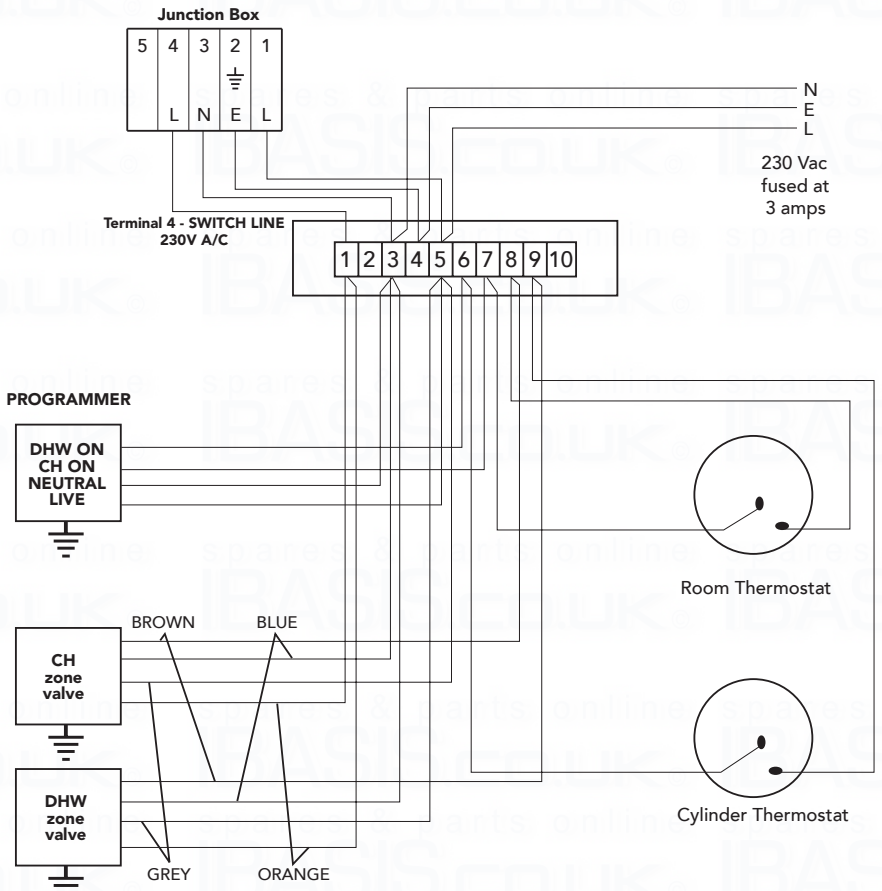

Fig. 6b

MAXIMA "Y" Plan

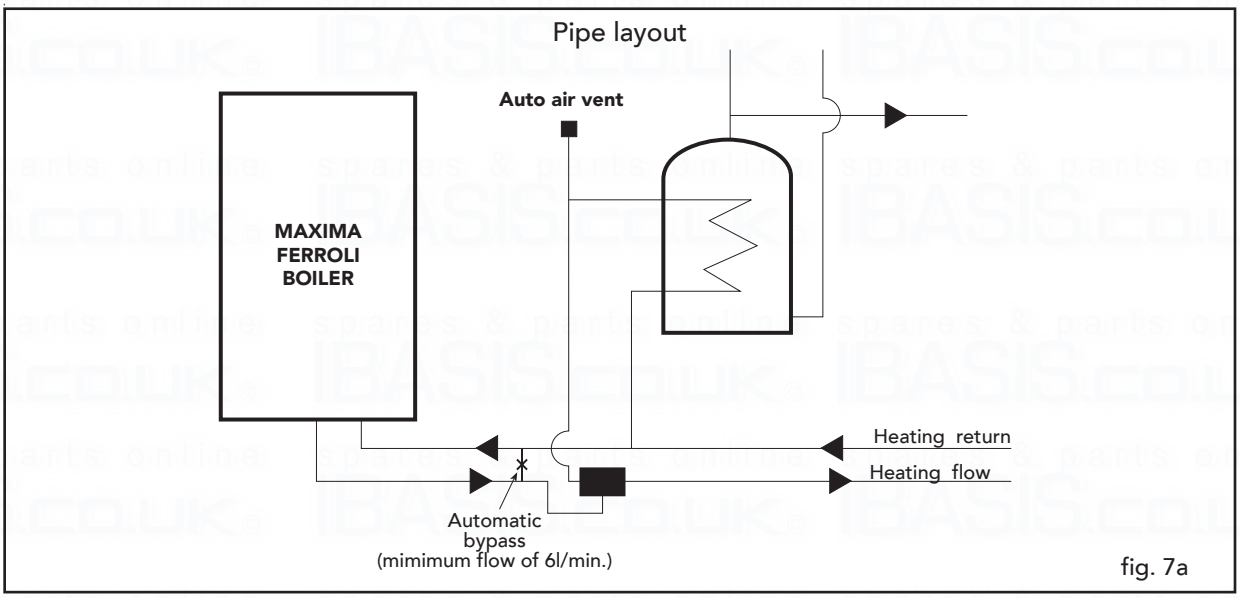

fig. 7a

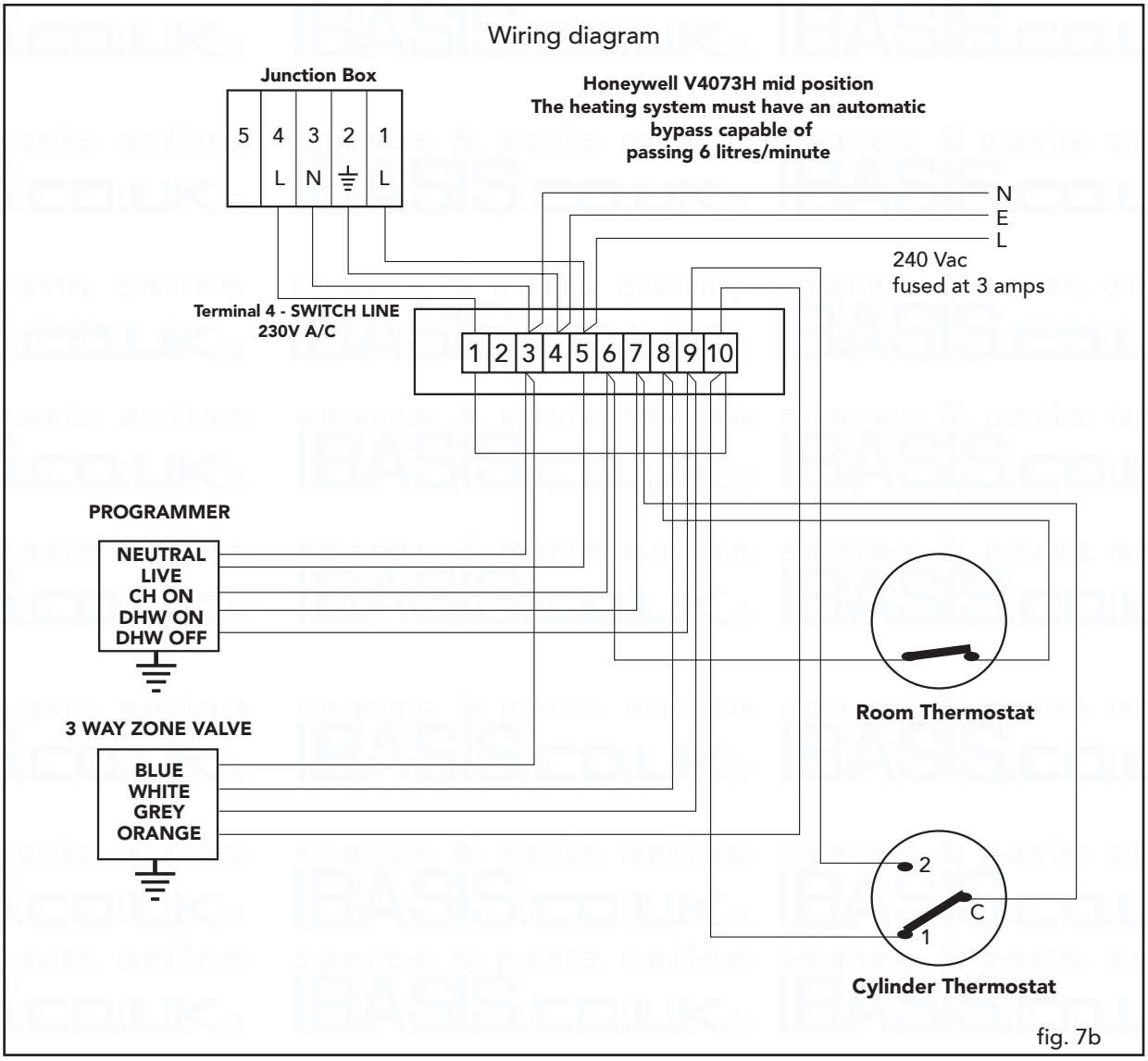

fig. 7b

The user must never change the unit's power cable. If the cable gets damaged, switch off the unit and have it changed solely by professionally qualified personnel. If changing the electric power cable, use solely "HAR H05 VV-F" 3x0.75 mm² cable with a maximum outside diameter of 8 mm.

Access to the electrical terminal board

Follow the diagram shown below to access the electrical connection terminal board (A fig. 8). The layout of the terminals for the various connections is given in section 4.6 wiring diagram fig 23.

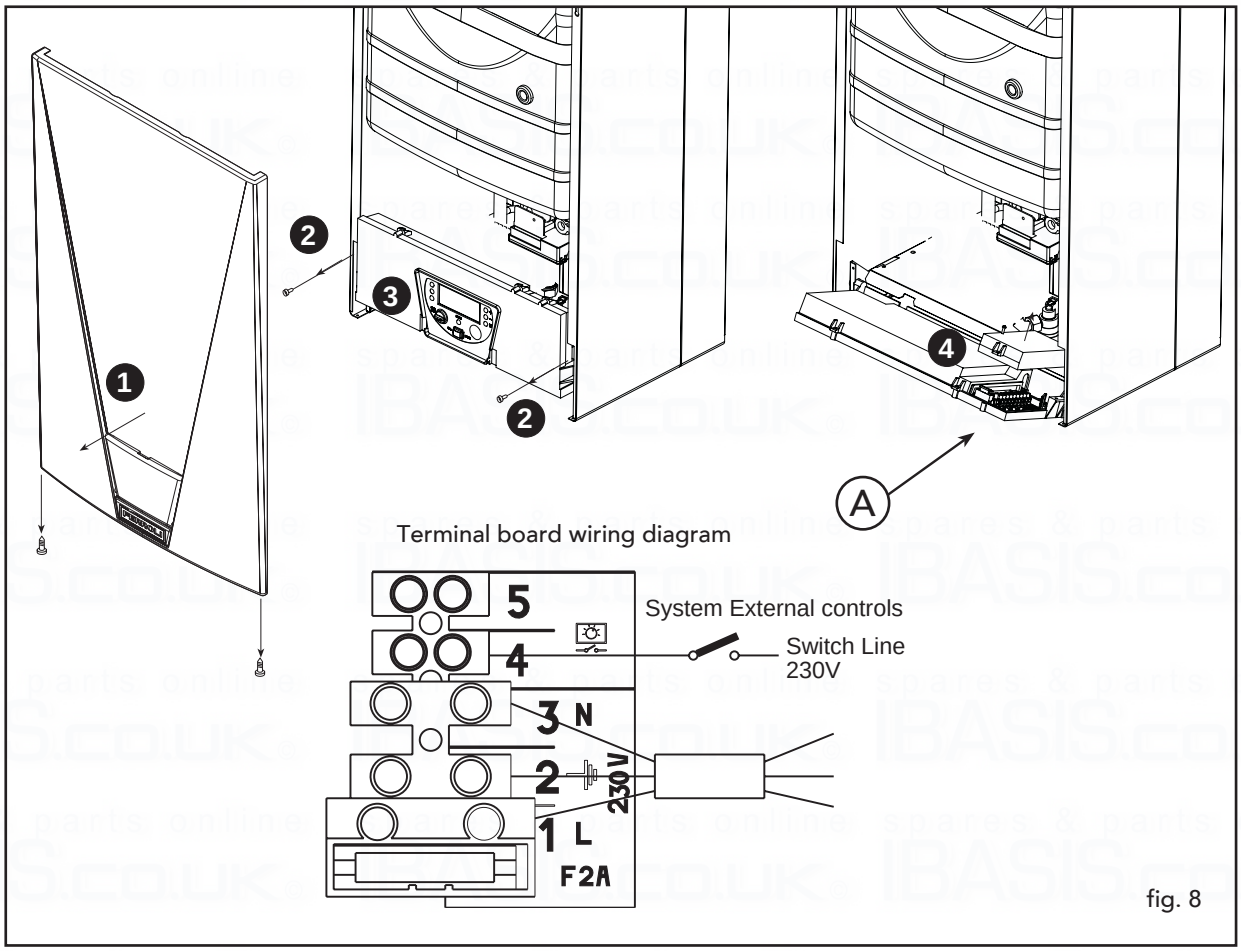

fig. 8

Room thermostat

CAUTION: the externals controls must supply 230V - 50Hz to terminal n° 4 (fig. 8).

2.6 Flue system

The unit is "type C" with a sealed chamber and forced draught, the air inlet and flue outlet must be connected to one of the following flue systems. With the aid of the tables and methods of calculation indicated, before commencing installation, it is first necessary to check that the flue system does not exceed the maximum permissible length. The current standards and local regulations must be observed.

It should be noted that only Ferroli flue system and accessories must be used on this appliance, as per BS 5440 2000 and C.E. test certification.

Connection with concentric flue system

The unit can be connected to a concentric air/flue duct with a wall or rooftop outlet as shown on the following drawings. Numerous accessories are available on request to meet the various installation requirements. Please refer to our "flue manual" or the price list.

Standard concentric flue installation

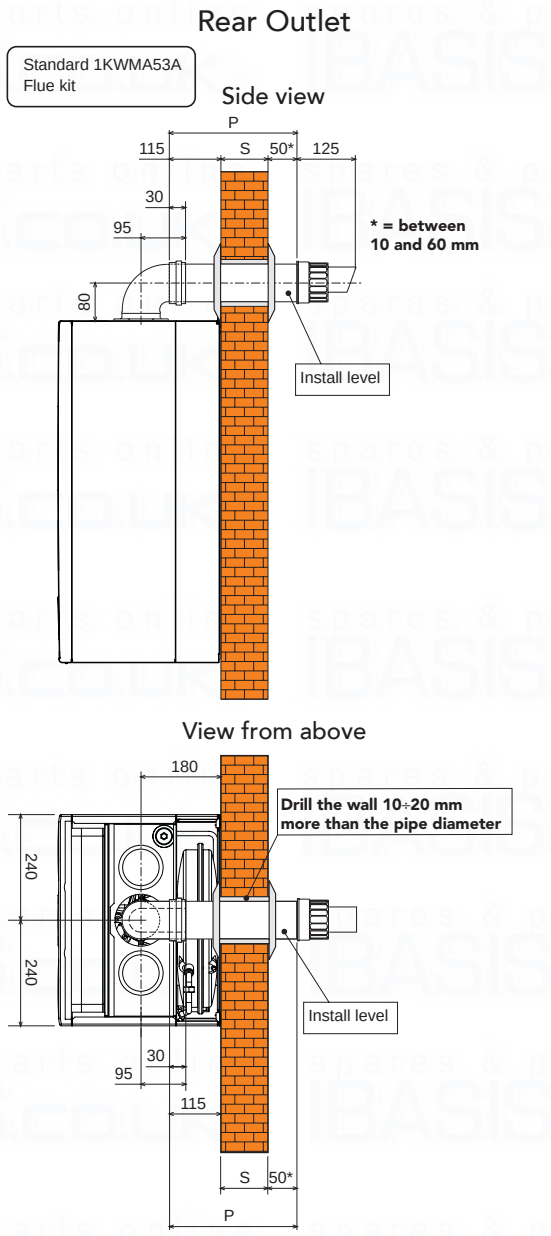

fig. 10a

P = S + 165 mm

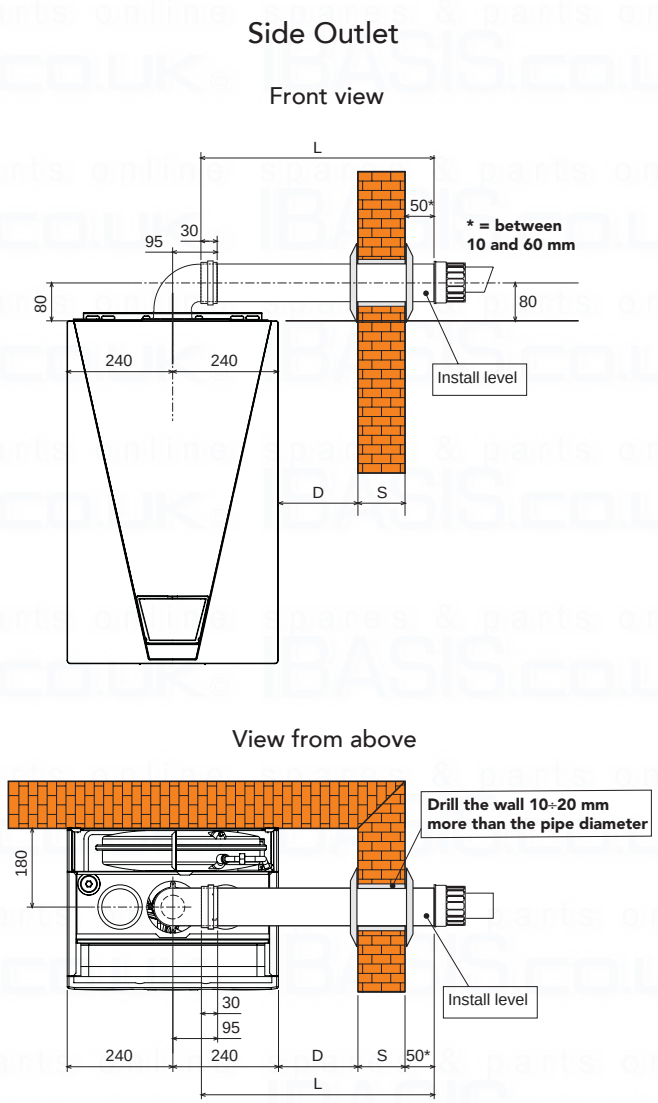

fig. 10b

L = S + D + 175 mm

Horizontal flue installation

1. Define the position for installing the unit.
2. If using standard flue (1KWMA53A) this must be installed level, for non-standard flue lenghts over 1mtr a fall of 3 mm per metre should be incorporated.
3. Make a hole of diameter 10 - 20 mm greater than the nominal diameter of the concentric pipe used.
4. If necessary, cut the end pipe to size, ensuring that the external pipe protrudes from the wall by between 10 and 60 mm (Fig. 10a and 10b). Remove the cutting burrs.

5. Connect the flue to the boiler, positioning the seals correctly. Seal the flue into the wall with silicone or sand + cement and cover with wall seals provided.

☞ Flue seals should be lubricated with a silicone type grease to prevent damage (grease not supplied)

Vertical Outlet

The total length in equivalent metres of the concentric flue must not exceed the maximum lengths stated in the following table, note that each bend gives rise to the stated reduction. For example, a duct = 60/100 composed of 1 bend of 90° +1 horizontal metre + 2 bends of 45° + 1 horizontal metre has a total equivalent length of 4 metres.

Vertical flueing

The installation of a concentric vertical flue can be carried out as follows,

Install the appliance as previously mentioned in this manual.

1. Connect onto the flue assembly at the top of the appliance a concentric vertical adaptor part number 1KWMA71W.
2. Use the required amount of 1mtr flue extensions (part number 1KWMA56U) inserting them spigot down ensuring the seals are well lubricated with silicone grease (not supplied) and correctly located into the sockets.
3. If required 45° bends (Part number1KWMA64A) may be used with a resistance value of 0.5mtrs each, the flue should be routed in such away to avoid any unnecessary deviation and thus minimise the amount of bends required.
4. The termination should be made through our concentric flue outlet (part number 1KWMA83U) in conjunction with a roof slate pitched (part number 1KWMA82U)or flat roof (part number 1KWMA81U) The storm collar must be fixed on using the three screws provided and sealed with an external grade silicone (not supplied).
5. For longer flue lengths a 125mm concentric flue system is available.
6. All flue installations must comply with BS5440 part 1 and must only be of Fèrroli manufacture. The vertical flue must continually rise and be supported throughout its length. The flue must be inspected whilst commissioning the appliance to ensure it is sound throughout its length.

This information is for guidance purposes and Fèrroli will in no way be held responsible for incorrect installation following this guide.

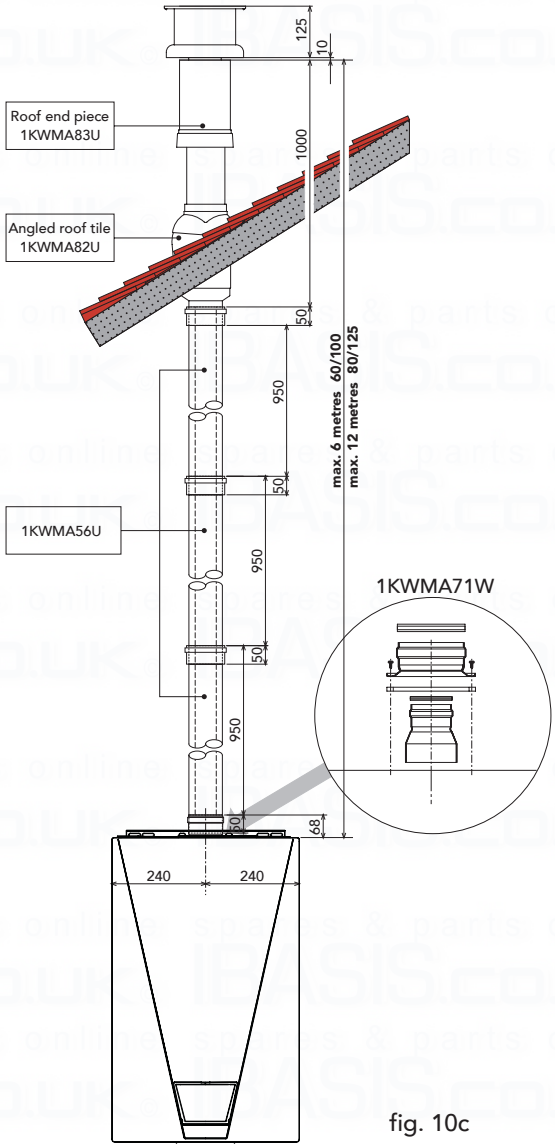

fig. 10c

Table 2a

	Ø mm 60/100	Ø mm 80/125
Maximum permissible duct length (Horizontal)	5 m	12 m
Maximum permissible duct length (vertical)	6 m	12 m

Table 2b

Reduction factors for bends	
Concentric bend at 90° - Ø 60/100 mm	1 m
Concentric bend at 45° - Ø 60/100 mm	0.5 m
Concentric bend at 90° - Ø 80/125 mm	0.5 m
Concentric bend at 45° - Ø 80/125 mm	0.25 m

Connection with 80 mm pipe system

The unit can be connected to a system of separate air/flue pipes for a wall or rooftop outlet as shown on the fig. 11 - 12. Numerous accessories are available on request to meet the various installation requirements.

Please refer to the flue manual catalogue or the price list for additional components.

To check you do not exceed the maximum permissible flue length, it is necessary to make a simple calculation before installation:

1. For each component, tables 4 - 5 provide an "equivalent loss in metres", depending on the position of installation of the component (with air intake or flue extraction, vertical or horizontal).

   The loss is called "equivalent length" since it is compared to the loss of one metre of flue (defined as equal to 1). For example, a bend at 90° of Ø80 in flue run has an equivalent loss of 2.5 linear metres, i.e. it has a loss equal to that of 2.5 metres of flue length.

2. After completely designing the layout of the system, add up the losses in equivalent metres, depending on the installation position, of all the components and accessories in the system.

3. Check that the total calculated loss is less than or equal to 55 equivalent metres, i.e. the maximum permissible for this model of boiler.

☞ For complete flue options please contact FERROLI or check our comprensive flue manual.

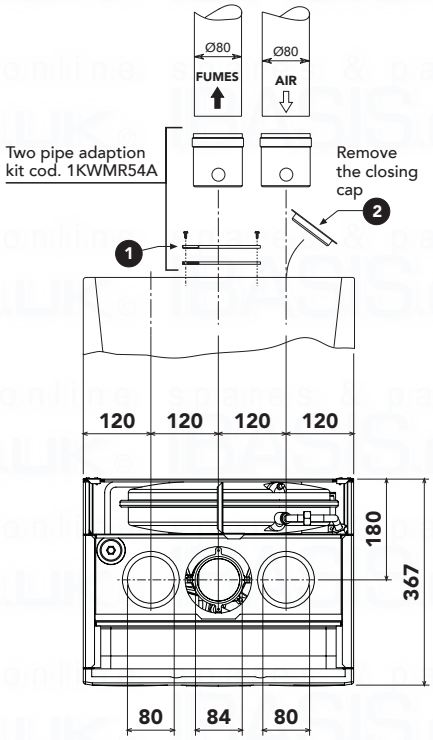

fig. 11

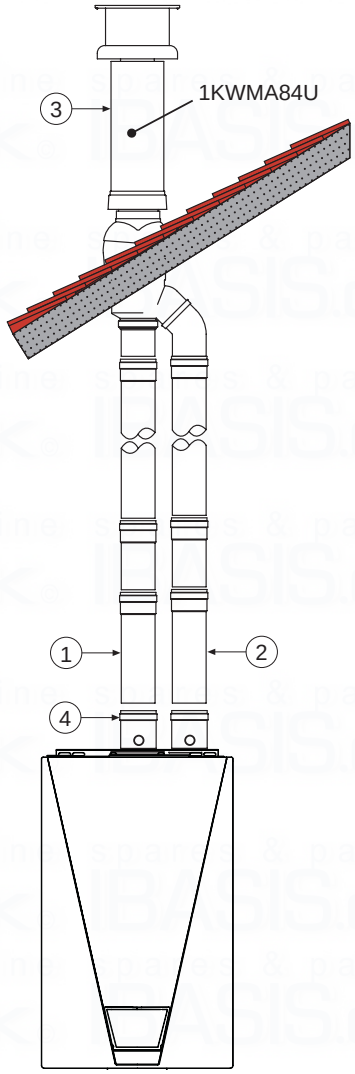

fig. 12

Table 3

Ref.	N° Pieces	Description	Equivalent loss
1	16	Vertical flue pipe Ø80	25,6 m
2	16	Vertical air pipe Ø80	16,0 m
3	1	Vertical flue terminal	12,0 m
4	1	Two pipe adaption kit (1KWMR54A)	0,0 m
		Total	53,6 m

Table of flue and accessory

Table 4

Accessories Ø 80		Equivalent losses in metres (linear)			
		Air		Flue	
Description		Vertical	Horizontal	Vertical	Horizontal
Pipe Ø 80 male-female	KWMA83W • 1,00 m	1	1	1.6	2
Bend 45° Ø 80 mm male - female	KWMA65W	1.2		1.8	
Bend 90° Ø 80 mm male - female	KWMA01W	1.5		2.0	

Table 5

Accessories Ø 80		Equivalent losses in metres (linear)			
		Air		Flue	
Description		Vertical	Horizontal	Vertical	Horizontal
Horozontial flue terminal	KWMA86A				5
Horozontial air terminal	KWMA85A		2		
Vertical flue terminal	KWMA84U	12			

The stated loss values refer to genuine Ferroli flue accessories.

Terminal Position

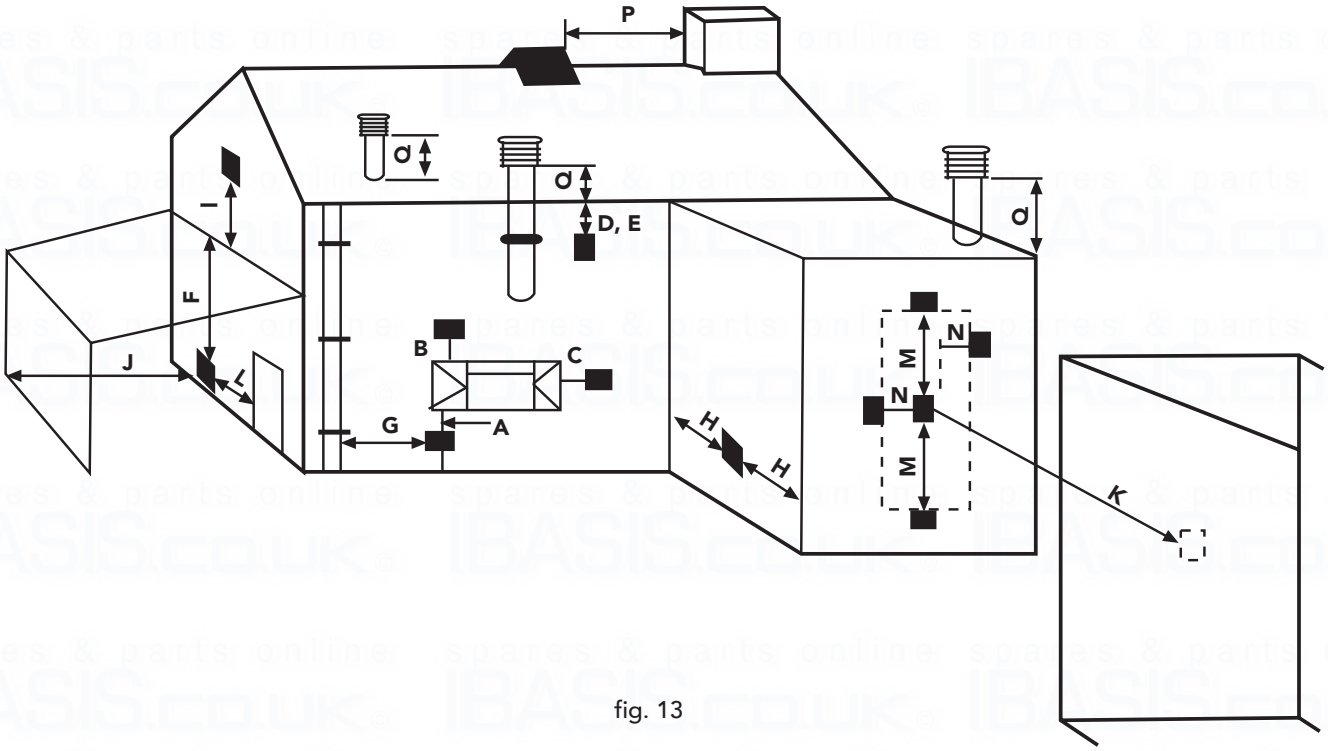

fig. 13

Minimum Dimensions of Flue Terminal Positions

A	Directly below an opening, air brick, opening windows, etc.	300mm
B	Above an opening, air brick, opening windows, etc.	300mm
C	Horizontally to an opening, air brick, opening windows, etc.	300mm
D	Below gutters, soil pipes or drain pipes	75mm
E	Below eaves	200mm
F	Below balconies or car port roof	200mm
G	From a vertical drain pipe or soil pipe	150mm
H	From an internal or external corner	100mm
I	Above ground roof or balcony level	300mm
J	From a surface facing the terminal	600mm
K	From a terminal facing the terminal	1200mm
L	From an opening in the car port (e.g. door, window) into the dwelling	1200mm
M	Vertically from a terminal on the same wall	1500mm
N	Horizontally from a terminal on the same wall	300mm
O	From the wall on which the terminal is mounted	N/A
P	From a vertical structure on the roof	150mm
Q	Above intersection with roof	300mm

NOTE

N/A = Not applicable

In addition, the terminal should not be nearer than 150mm (fanned draugt) or 300mm (natural draugt) to an opening in the building fabric formed for the purpose of accommodating a built-in element such as a window frame. Separation distances are linked to the rated heat inputs as shown.

Condensing Terminal Positions: If the flue is to be terminated at low level, then the potential effect of the plume must be considered.

The plume should not be directed:
- across a frequently used access route
- towards a window or door
- across a neighbouring property

Connection to collective flues or single flues with natural draught

If you are then going to connect the Maxima 35 S boiler to a collective flue or a single flue with natural draught, the flue must be expressly designed by professionally qualified technical personnel in conformity with the standards and rules in force.

In particular, flues must have the following characteristics:

- Be sized according to the method of calculation stated in the standard
- Be airtight to the products of combustion, resistant to the fumes and heat and waterproof for the condensate
- Have a circular or square cross-section (some hydraulically equivalent sections are permissible), with a vertical progression and with no constrictions
- Have the ducts conveying the hot fumes adequately distanced or isolated from combustible materials
- Be connected to just one unit per floor, for at most 6 units in all (8 if there is a compensation duct or opening)
- Have no mechanical suction devices in the main ducts
- Be at a lower pressure, all along their length, under conditions of stationary operation
- Have at their base a collection chamber for solid materials or condensation of at least 0.5 m, equipped with a metal door with an airtight closure.

2.7 Condensate outlet connection

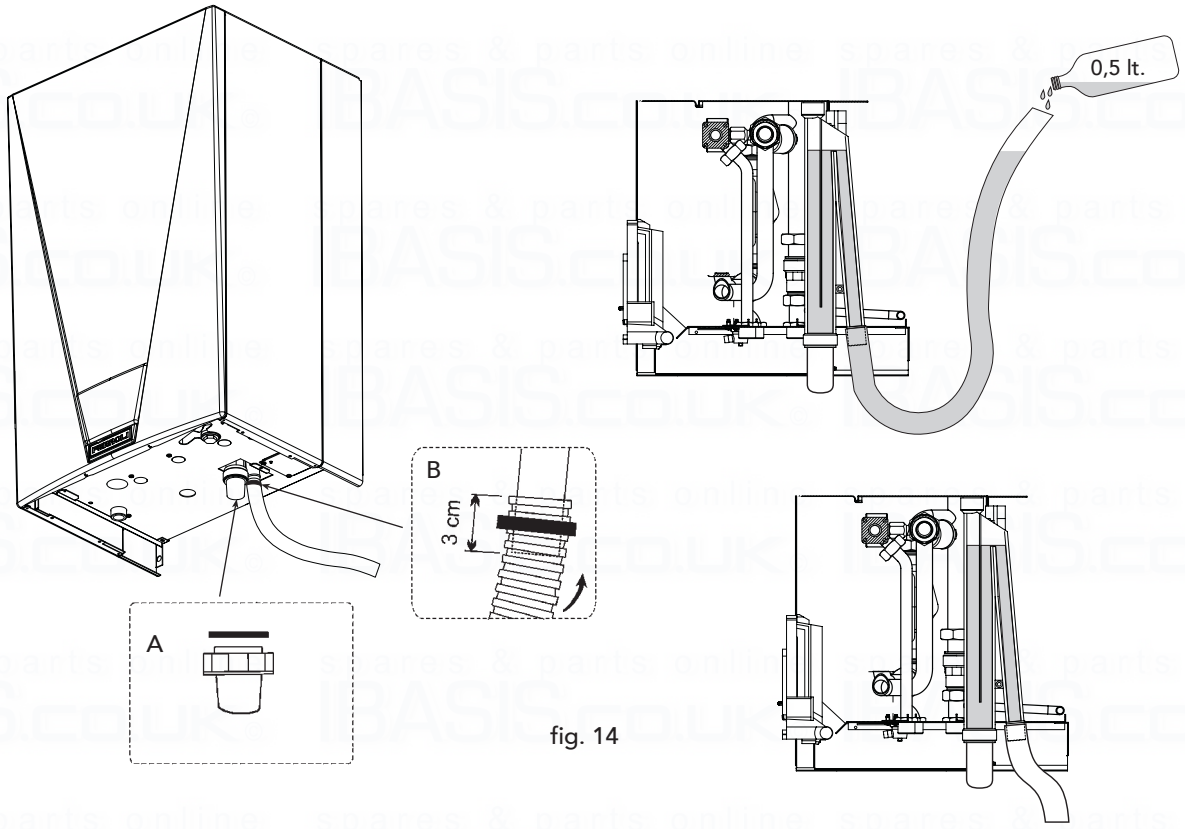

fig. 14

The boiler is equipped with an internal air-trap to drain off the condensate. Fit the inspection bowl A and the hose B, pushing it on for approximately 3 cm.

Fill the air-trap with approximately 0.5 l. of water and connect the hose to the waste system or soakaway.

Condensate discharge

Where possible the condensate should discharge into an internal soil pipe or waste system. The minimum pipe diameter required is 22 mm, a trap has already been fitted to the appliance with a flexible tail to facilitate the connection to the condensate discharge pipe.

The pipe should be a solvent weld plastic, not copper, as the condensate has a ph value of 4 (slightly acidic).

Where it is not possible to terminate internally, the condensate discharge pipe may be run outside (see below drawing).

Any external run is subjet to freezing, in severe weather conditions. To avoid this the pipework should be installed to dispose of the condensate quickly, with as much as possible run internally, before passing through the wall.

Pipework external to the building should be increased in diameter to 32 or 40 mm solvent weld. It should be run to a external drain or soakaway, with a maximum lenth of 3 metres.

When a soakaway (condensate absorption point) is used, it should be constructed as shown below, or use a specifically designed unit, for example McAlpine SOAK1GR available from most plumbing and heating stockists.

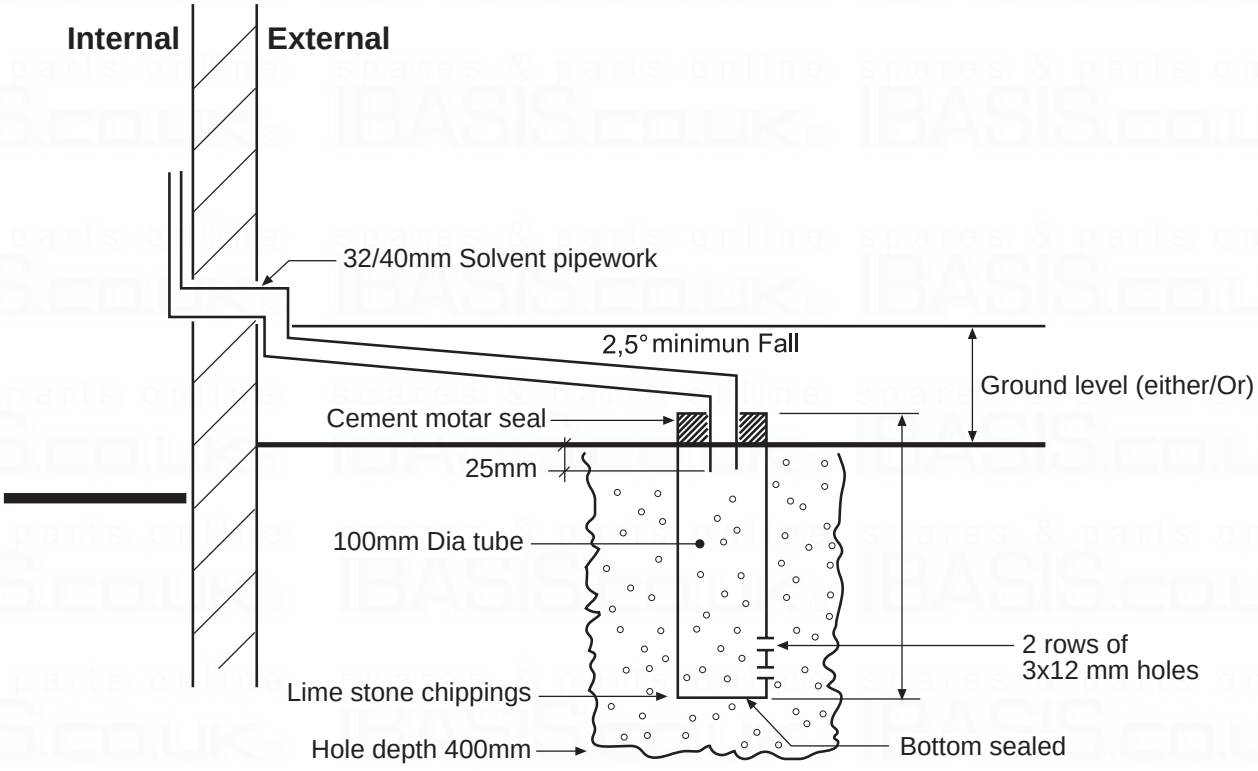

fig. 15

3. SERVICE AND MAINTENANCE

3.1 Adjustments

All adjustment and conversion operations must be carried out by Qualified Personnel such as the Ferroli Technical Service.

FERROLI declines any responsibility for damage or physical injury caused by unqualified and unauthorized persons tampering with the device.

Gas supply conversion

The unit can function with either Natural Gas or LPG (commercial propane) and is factory-set for use with one of the two gases, as clearly shown on the packing and on the unit's dataplate. Whenever a different gas to that for which the unit is preset has to be used, a conversion kit will be required, proceeding as follows:

1 Remove the casing.
2 Open the combustion chamber.
3 Unscrew the gas coupling A on the air/gas venturi.
4 Replace the injector in the mixer with the one contained in the conversion kit.
5 Refit the coupling A and check the connection is gas tight.
6 Apply the sticker, contained in the conversion kit, near the dataplate.
7 Fit the combustion chamber and casing back on.
8 Check inlet working pressure.
9 Set CO_2 mixture as detailed, (page 26 combustion analyser testing).

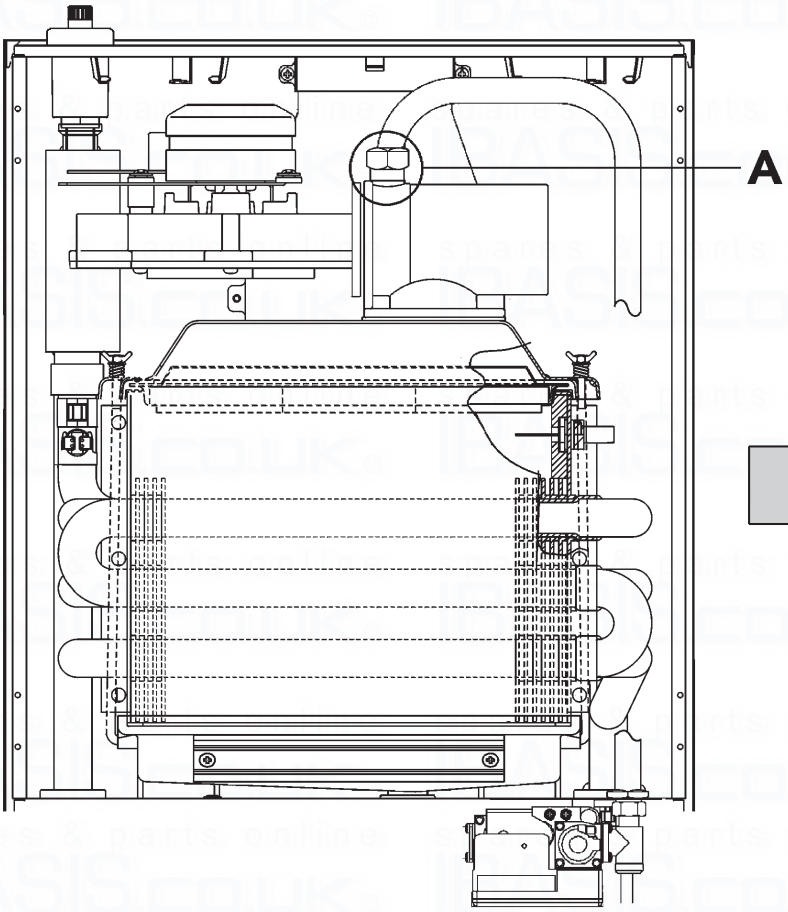

	Natural gas	LPG
Nozzle Ø	See technical data table	

fig. 16

3.2 Initial start-up

Commissioning must be performed by Qualified Personnel.
Checks to be made at initial start up, and after all maintenance operations that involved disconnecting from the system or an intervention of a safety device.

Before lighting the boiler:

- Open any isolation valves between the boiler and the system.
- Check the tightness of the gas system, proceeding with caution and use gas leak detection fluid to detect any leaks an connections.
- Fill the water system and make sure that all air contained in the boiler and the system has been vented by opening the air vent valve on the boiler and any vent valves on the system.
- Make sure there are no water leaks in the system, connections or boiler.
- Make sure the electrical system is properly connected.
- Make sure that the unit is connected to a good earthing system.
- Make sure there are no flammable liquids or materials in the immediate vicinity of the boiler.
- Vent and spin pumps.
- Ensure flue system is correctly fitted, including terminal locations.

Ignition

- Open the gas valve upstream of the boiler.
- Purge the air from the installation pipework to the appliance.
- Swith on boiler fused spur.
- Press the ON/OFF key (see fig.1).
- The boiler is now ready to function automatically whenever the externals controls are calling.

In case of an electrical power failure while the boiler is working, the burner will go out. When power returns, the boiler will run the self-test cycle again, after which the burner will automatically re-ignite (if there is still demand for heat).

Checks during operation

- Check for water leaks.
- Check the efficiency of the flue and air ducts while the boiler is operating.
- Check that the water is circulating properly between the boiler and the systems.
- Make sure that the gas valve modulates correctly in the heating phase.
- Check for correct ignition of the boiler by performing various tests, turning it on and off with the room thermostat or remote control.
- Make sure that the fuel consumption indicated on the gas meter corresponds to that given in the technical data table in section 4.4

3.3 Maintenance

⚠ The following operations are strictly reserved for Qualified Personnel, such as corgi registered engineers or Ferroli personeer.

Seasonal inspection of the boiler and flue

It is advisable to carry out the following checks at least once a year:

- The control and safety devices (gas valve, thermostats, etc.) must function correctly.
- The flue terminal end piece and ducts must be free of obstructions and leaks.
- The gas and water systems must be sound.
- The burner and exchanger must be clean.
- The electrodes must be free of scale and correctly positioned.
- The water pressure in the cold water system must be approx 1 bar; otherwise, bring it to that value.
- The expansion vessel must be filled to 1 bar cold with zero system pressure.
- The gas flow and pressure must correspond to that given in the table 10 section 4.4.
- The circulating pumps must be vented and free of debris.
- The returned filter cleaned.
- The condensate trap inspection bowl should be cleaned & free of debris.

Opening the casing

To open the boiler casing, you will need to follow the sequence and the instructions of fig. 17 given below.

1 Using a screwdriver, fully unscrew & remove the 2 screws "A "
2 Open by pulling the panel "B "
3 Lift and take off the panel "B "

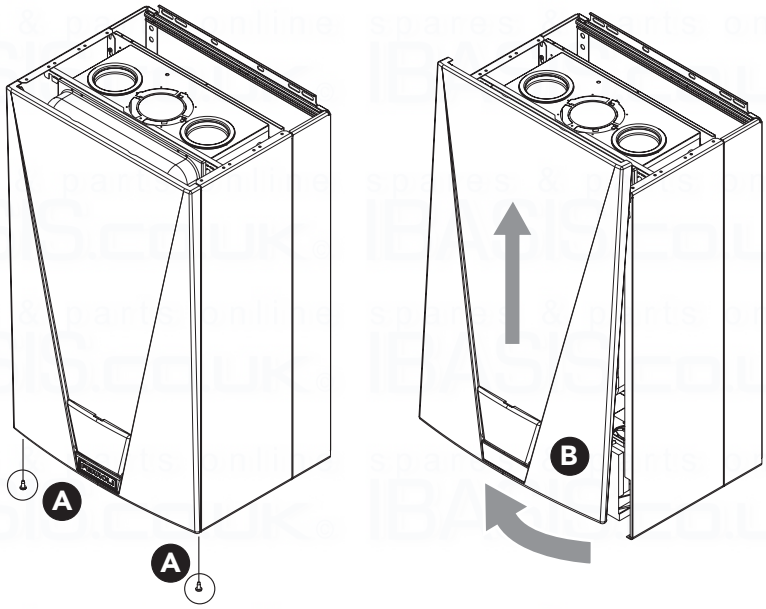

fig. 17

Cleaning the boiler and burner

The body and burner must not be cleaned with chemical products or wire brushes. Special care must be taken over all the sealing systems pertaining to the sealed chamber (gaskets, cable clamps, etc.). In addition, it is necessary to pay attention after performing all these operations to check and carry out all the phases of ignition and thermostat operation, the gas valve and circulation pump.

After these checks, make sure there are no gas leaks.

Combustion analyser testing

It is possible to analyse the combustion through the air and flue sampling points shown in fig. 18.

To make the measurement, it is necessary to:

1) Open the flue sampling point
3) Insert the probe;
4) Press the "+" and "-" keys for 5 seconds to turn on TEST mode;
6) Wait 10 minutes for the boiler to stabilize
7) Take the measurement.

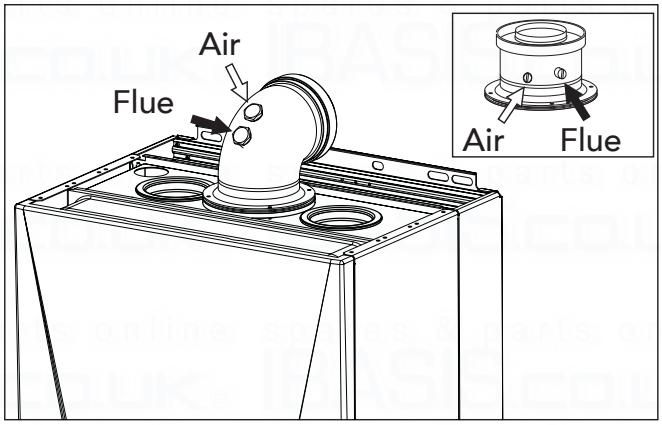

fig. 18

CO_2 reading should be 8,7 to 9,0 % CO_2.
Propane CO_2 should be 9,5 to10%.

3.4 Troubleshooting

Fault Diagnosis

In the event of operating problems or a fault, the display will flash and a fault identification code appears.

Faults marked with the letter "F" cause temporary shutdowns that are automatically reset as soon as the value comes back within the boiler's normal working range.

If together with the fault the display also shows RESET, the user must reset boiler operation by pressing the RESET key (5 - fig. 1). The ignition cycle will thus be repeated.

Table 9

	Fault	Possible cause	Cure
F1	No burner ignition	• No gas • Detection or ignition electrode fault • Defective gas valve • Faulty full auto control	• Check the regular gas flow to the boiler and the air has been eliminated from the pipes. • Check that the electrodes are correctly positioned and free of any deposits • Check and change the gas valve • Check and change full auto
F2	flame detected with the burner off	• Ionization electrode defected • Main board defected	• Check the ionizing electrode wiring • Check the CVBC
F3	100°C Safety thermostat trips	• Flow sensor not active or located correctly • No system circulation	• Check the correct positioning and operation of the flow sensor • Check the pumps
F5	Fan fault	• Fan connection or fan damaged, debris in fan	• Check the wiring and check the fan • Clear debris if required
F8	Flame circuit fault	• Ionisation probe fault • Mains interference	• Check and if necessary change the ionisation probe • Check the earthing
F9	No communication between the full auto and the gas valve	• Incorrect wiring • Check full auto • Damaged gas valve	• Check the wiring • Check the full auto • Change the gas valve
F10 to F22	Microprocessor fault	• Microprocessor operating fault	• Cut off and restore the electricity supply. If the trouble remains, check and/or change the main P.C.B.

	Fault	Possible cause	Cure
F25	Software fault	• Software operating fault	• Cut off and restore the electricity supply. If the trouble remains, check and/or change the main P.C.B.
F26	Flame absence after ignition phase	• Blocked flue system • Low gas pressure	• Clear the obstruction from flue, from outlet pipes and from air inlet • check working pressure to boiler
F30	CH flow sensor fault	• Sensor damaged or short circuited	• Check the wiring or change the sensor
F31	CH flow sensor fault	• Sensor damaged or wiring broken	• Check the wiring or change the sensor
F34	Supply voltage under 190V. or over 250V.	• Electric mains fault	• Check the electrical system
F35	Irregular mains frequency	• Electric mains fault	• Check the electrical system
F36	Main P.C.B. fault	• Faulty main P.C.B. • Water on P.C.B.	• Change the P.C.B.
F37	Incorrect system water pressure	• Pressure too low • Sensor damaged	• Fill the system • Check the sensor
F40	Incorrect system water pressure	• Pressure too high above 3 - 5 bar	• Check the fill loop not passing • Check the safety valve • Check the expansion vessel
F41	Pressure sensor fault	• Sensor damaged or wiring broken	• Check the wiring or change the sensor
F43	Return sensor fault	• Sensor damaged or wiring shorted	• Check the wiring or change the sensor
F44	Return sensor fault	• Sensor damaged or wiring broken	• Check the wiring or change the sensor
F45	Flue gas sensor fault	• Sensor damaged or wiring shorted	• Check the wiring or change the sensor
F46	Flue gas sensor fault	• Sensor damaged or wiring broken	• Check the wiring or change the sensor
F47	Pressure sensor not connected	• Wiring broken	• Check the wiring.

4 TECHNICAL CHARACTERISTICS AND DATA

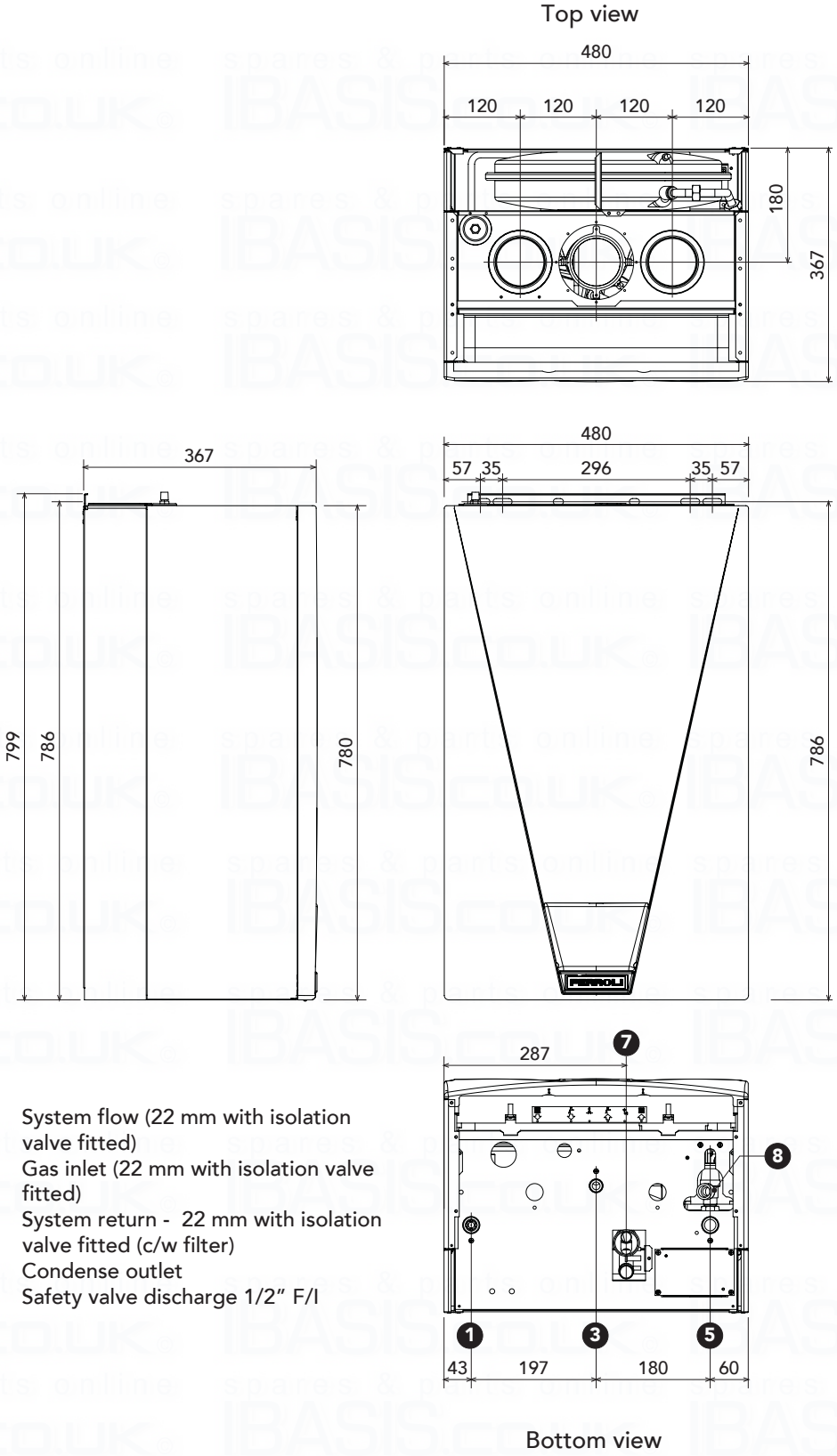

Key

- **1** System flow (22 mm with isolation valve fitted)
- **3** Gas inlet (22 mm with isolation valve fitted)
- **5** System return - 22 mm with isolation valve fitted (c/w filter)
- **7** Condense outlet
- **8** Safety valve discharge 1/2" F/I

fig. 19

4.2 General view and main components

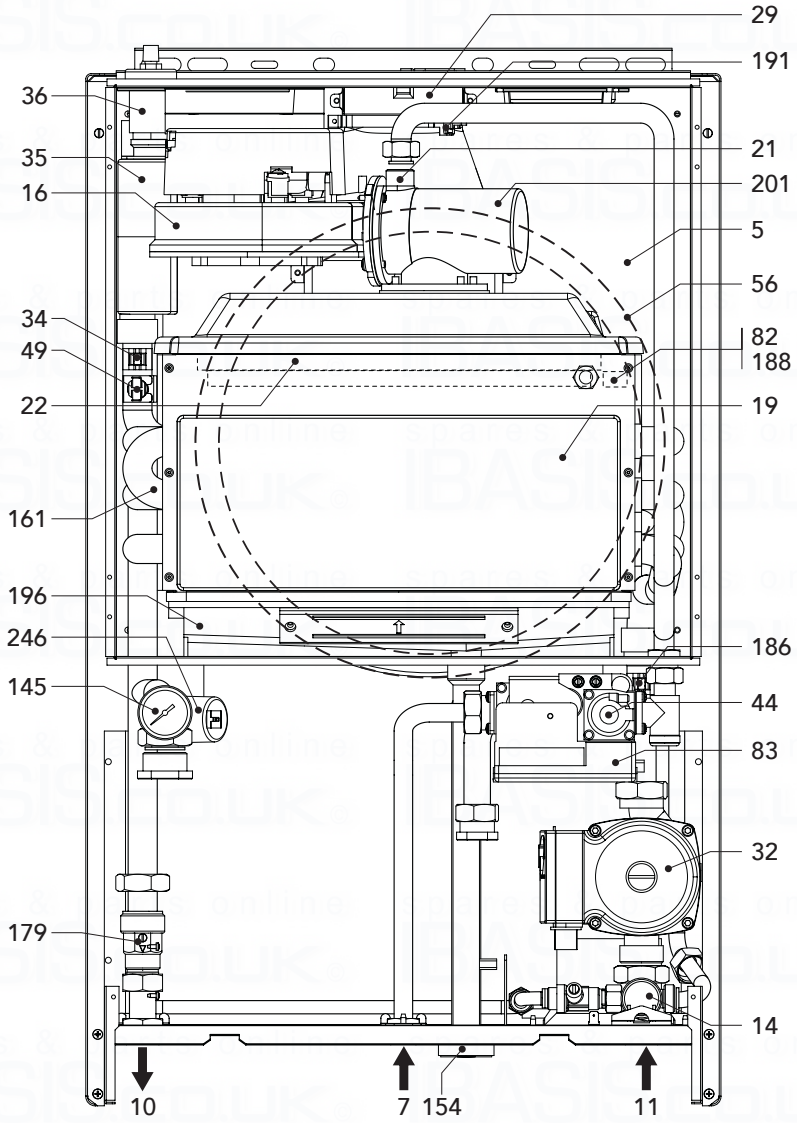

fig. 20

Key

5	Combustion chamber
7	Gas inlet
10	CH flow
11	CH return
14	Safety valve
16	Premix fan
19	Combustion chamber
21	Gas injector
22	Ceramic burner
29	Flue outlet manifold
32	Heating pump
34	Heating flow sensor
35	Air separator
36	Automatic air vent
44	Gas valve
49	Safety thermostat
56	Expansion vessel
82	Detection electrode
83	C.V.B.C control unit
145	Pressure gauge
154	Condensate outlet pipe
161	Heat exchanger
179	Heating flow non return valve
186	Return sensor
188	Ignition electrode
191	Flue temperature sensor
196	Condensate collector
201	Fan venturi
246	System pressure sensor

4.3 Hydraulic diagram

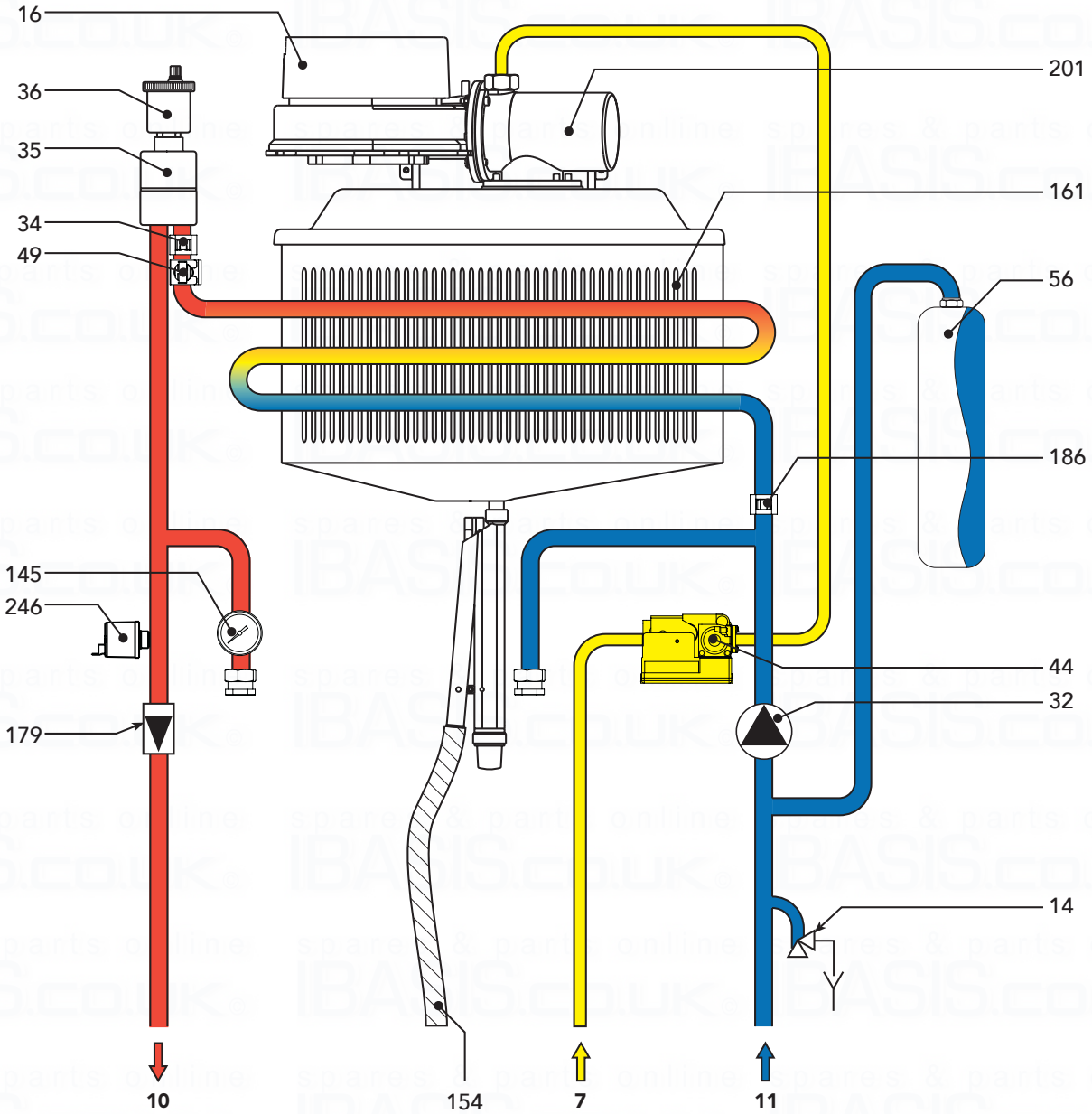

fig. 21

Key

7	Gas inlet	49	Safety thermostat
10	CH flow	56	Expansion vessel
11	CH return	145	System pressure gauge (water gauge)
14	Heating safety valve	154	Condensate outlet pipe
16	Premix fan assembly	179	Heating flow non return valve
32	Heating pump	161	Heat exchanger
34	Flow temperature sensor	186	Return sensor
35	Air separator	201	Fan venturi
36	Automatic air vent	246	System pressure sensor
44	Gas valve		

4.4 Technical data table

Table 10

Powers		Pmax	Pmin
Hi Heating power	kW	34,8	10,4
Useful Heating Power 80° C - 60° C	kW	34,6	10,2
Useful Heating Power 50° C - 30° C	kW	36,4	11,1
Natural Gas delivery (G20)	m^3/h	3,68	1,10
Natural Gas supply pressure (G20)	mbar	20	20
LPG flow rate (G31)	kg/h	2,72	0,81
LPG supply pressure (G31)	mbar	37	37
Combustion		**Pmax**	**Pmin**
CO2 (G20 - Natural Gas)	%	8,7-9,0	8,5-9,0
Gas nozzle (G20 - Natural Gas)	Ø mm	5,9	
CO2 (G31 - Propane)	%	9,5-10	9,2-10
Gas nozzle (G31 - Propane)	Ø mm	4,4	
Flue temperature 80° C-60° C	°C	70	60
Flue temperature 50° C-30° C	°C	45	30
Flue flow rate	kg/h	57	17,5
Quantity of condensate	kg/h	3,96	1,90
pH of condensation water	pH	4,1	
Energy marking (92/42 EEC directive)		★★★★	
NOx emission class		5	
Heating			
Heating temperature adjustment range	°C	20 - 90	
Maximum working temperature in heating	°C	90	
Maximum working pressure in heating	bar	3	
Minimum working pressure in heating	bar	0.8	
Expansion vessel capacity	litres	10	
Expansion vessel pre-filling pressure	bar	1	
Total boiler water content	litres	2	
Dimensions, weights connections			
Height	mm	780	
Width	mm	480	
Depth	mm	367	
Weight empty	kg	53	
Gas system connection (With isolation valve fitted)	mm	Ø22	
Heating system connections (With isolation valves fitted)	mm	Ø22	
Maximum length of separate flues D=80* (*Measurement given in equivalent linear metres – cfr FERROLI calculation system)	m_{eq}	55	
Electrical power supply			
Max electrical power absorbed	W	150	
Electric power drawn by the circulator (Speed I-II-III)	W	45-70-95	

4.5 Diagrams

Head available for the system

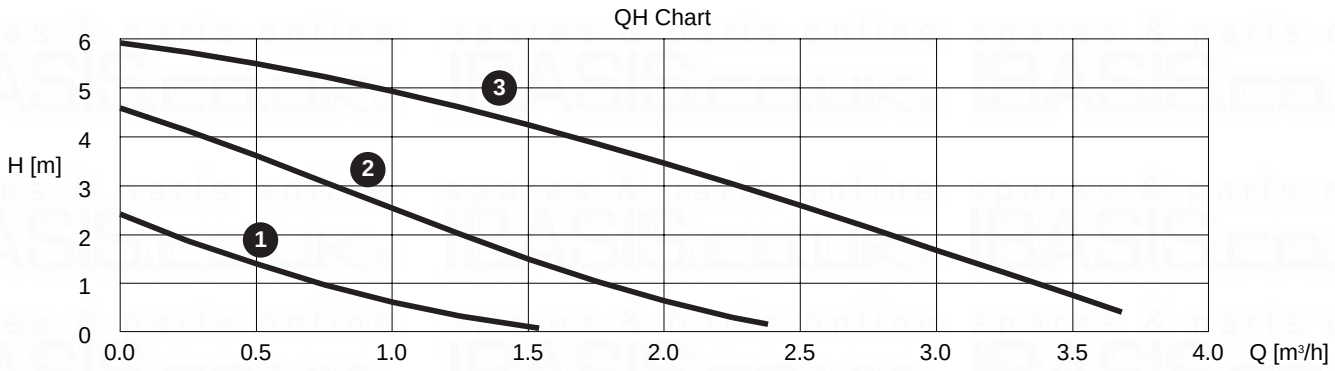

fig. 22

Key

1 - 2 - 3 = Pump selector positions (Ferroli 15/60)
A = Boiler losses of head

4.6 Wiring diagram

Key

16	Fan
32	Heating pump
34	Heating flow temperature sensor
44	Gas valve
49	Safety thermostat
72	Externals controls
81	Ignition electrode
82	Detection electrode
98	Power switch
137	System pressure sensor
186	Return sensor
191	Flue temperature sensor

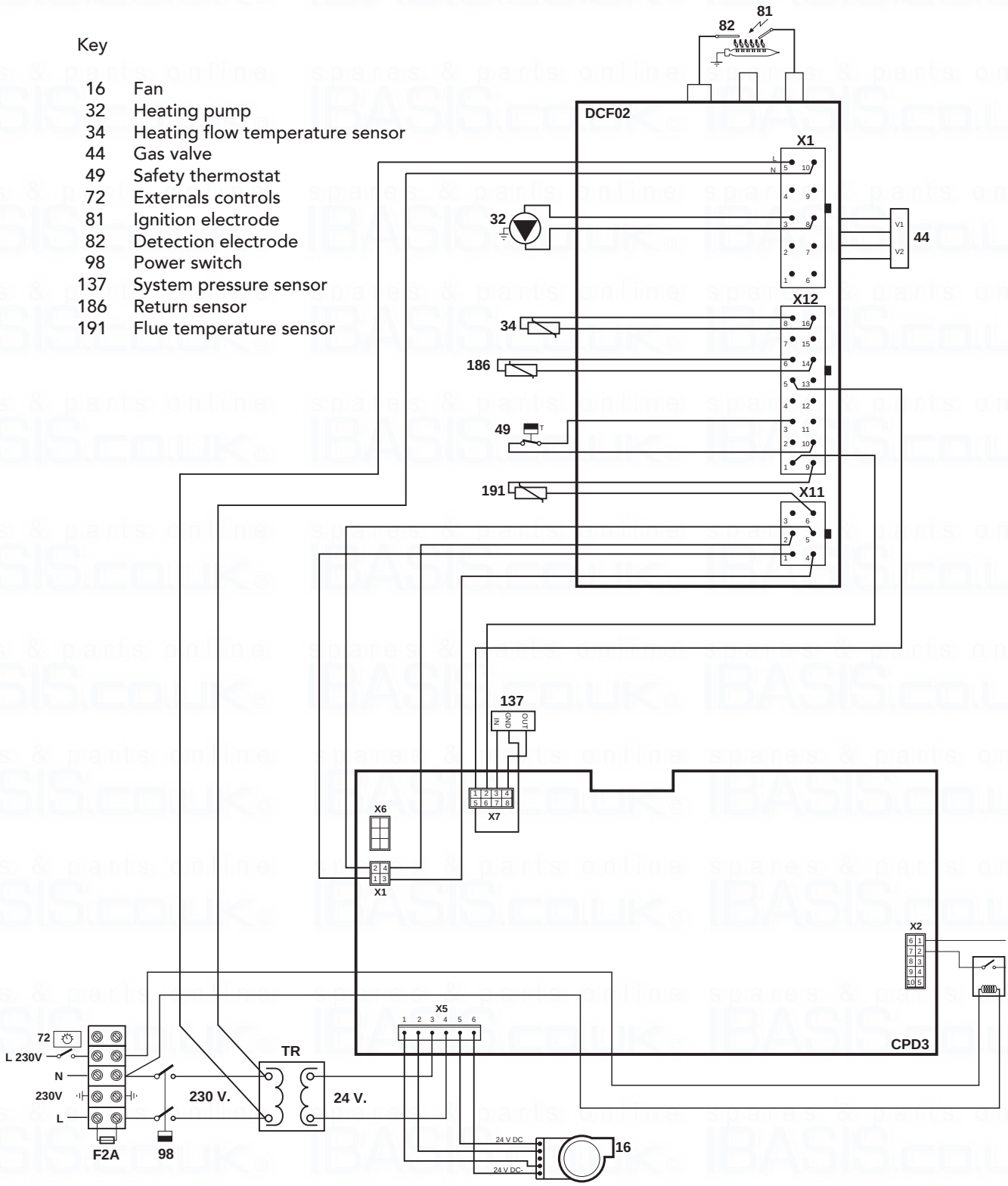

fig. 23

spares & parts online
IBASIS.co.uk®

Should you require help with any difficulties call our Technical Service Helpline on 08707 282 885

Phone numbers:

Installer _____

Service Engineer _____

BECAUSE OF OUR CONSTANT ENDEAVOUR FOR IMPROVEMENT DETAILS MAY VARY SLIGHTLY FROM THOSE QUOTED IN THESE INSTRUCTIONS.

FERROLI

ALL SPECIFICATIONS SUBJECT TO CHANGE

Please note - to avoid incurring unnecessary expense, in the event of a boiler shut down, check this in not caused by lack of electricity supply, gas supply or low water pressure before calling our Customer Service Helpline.

Lichfield Road, Branston Industrial Estate, Burton Upon Trent, Staffordshire DE14 3HD
Tel. 08707 282 885 - Fax 08707 282 886

spares & parts online IBASIS.CO.UK