OPTIMA 2001 VMF7

WALL MOUNTED, ROOM SEALED, FAN ASSISTED, GAS CONDENSING COMBINATION BOILER

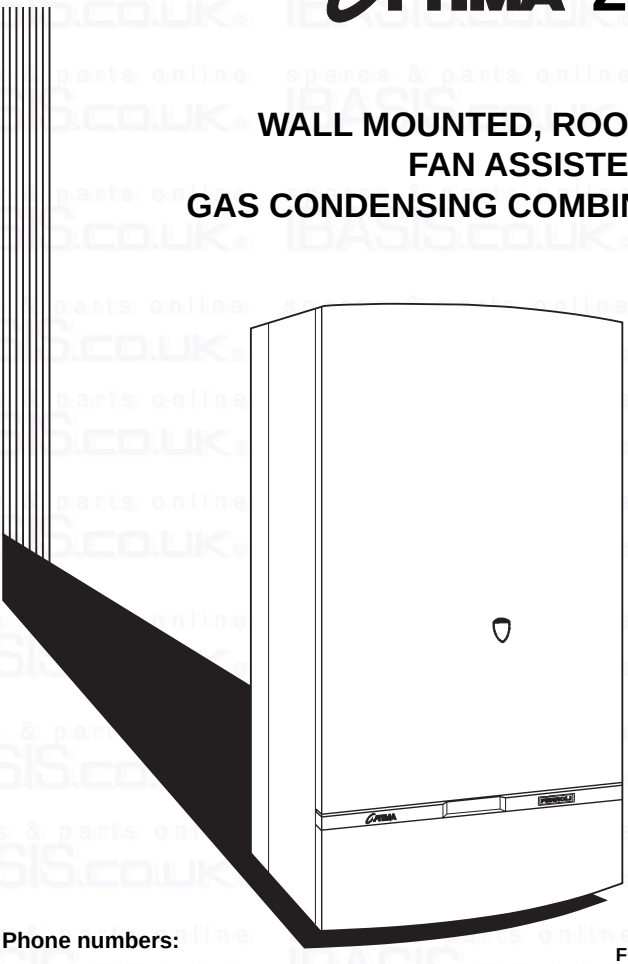

INSTALLATION INSTRUCTIONS

Appr. Nr. B95.01A CE 0063AQ2150

Read these Instructions thoroughly before using the appliance

Phone numbers:

Installer _____

Service Engineer _____

Serial No. _____

FERROLI HELPLINE

FOR SERVICE INFORMATION OR HELP TELEPHONE: 0121 352 3500
ALWAYS QUOTE YOUR SERIAL NUMBER FOR IMMEDIATE ASSISTANCE

G.C. NO: 47-367-21

ALL SPECIFICATIONS SUBJECT TO CHANGE

Stockton Close, Minworth Industrial Park, Minworth, Sutton Coldfield, West Midlands B76 8DH
Sales: 0121/3523500 - Fax 0121/3523510

spares & parts online IBASIS.CO.UK

page INDEX

3 General Description
3 Related Documents
4 Technical Data
5 Appliance Dimensions
6 Boiler Flow Diagram
7 Key of boiler flow diagram
8 Installation Details
8 Location of Boiler
8 Air Supply
8 Condensate
10 Flue System
10 Gas Supply
10 Water System
12 Central Heating Pump
12 Sizing of expansion vessel
13 Installation of Boiler
13 1. Unpacking
13 2. Mounting the Boiler Jig on the Wall (rear flue)
13 3. Mounting the Boiler Jig on the Wall (side flue)
14 Drilling template
15 4. Preparing the Flue Assembly
16 5. Connecting the Boiler
18 6. Fitting the Flue Assembly
18 7. Electrical Installation
19 External sensor
20 Setting of compensation curve
21 8. Commissioning & Testing
21 8.1 Filling the Central Heating System
21 8.2 Filling the Domestic Hot Water System
21 8.3 Electricity Supply
21 8.4 The Gas Installation
22 8.5 To Light the Boiler
23 Burner pressure C.H. and D.H.W.
24 Gas pressure adjustment with Honeywell VR 4605 NA 4003 valve
25 8.7 D.H.W. Burner Pressure
25 9. System operation
25 10. Handing Over to the User
26 General Wiring Diagram
27 Fast fault finding
28 General fault finding
29 Replacement of parts
30 Details GAS valve
30 Details combustion chamber
31 Details Burner
32 Honeywell gas valve
32 Printed circuit board (P.C.B.)
32 Thermostats
33 Temperature sensors
33 Pressure relief valve
33 Pump
34 Automatic air vent
35 Pressure gauge
35 C.H. selector switch
35 Time clock
36 Fault diagnostic/temperature control
36 Air pressure switch
37 C.H. expansion vessel
38 Exploded view gas line, combustion chamber an draft diverter
39 Exploded view heat exchanger + C.H. and D.H.W. parts
40 Spare Parts List
41 Domestic Hot Water Performance + Modureg
42 Special Installation Possibilities

General Description

The **Ferroli OPTIMA 2001** is a wall mounted, room sealed, fan assisted, condensing combination boiler for Central Heating (C.H.) and domestic Hot Water (D.H.W.).

The boiler is of light weight construction with two heat exchangers providing Central Heating and Domestic Hot Water from an integrally designed unit. The boiler contains its own expansion vessel for sealed systems. The wall mounting jig contains all the isolating cocks for the water and gas supplies which can be fitted to the wall and provided with all the necessary gas and water connections prior to the boiler being attached. The flue can either be left hand, right hand or rear. There are three flue lengths available and they are 0.75 metres (for wall thickness up to 565 mm), 2 metres (for wall thickness up to 1815 mm) and 3 metres (for wall thickness) up to 2815 mm these wall thicknesses assume a rear flue outlet. For side outlet the effective wall thickness for each flue length is reduced by 91 mm plus the distance of the appliance from the side wall. The Central Heating and the Domestic Hot Water temperature is controlled by the Honeywell Modureg valve in conjunction with the P.C.B. There is a limit thermostat on the central heating circuit which operates at 88°C. There is also an overheat cut-off thermostat which will shut the boiler down completely and this thermostat operates at 100°C. The boiler is fited with its own Central Heating pump. The pump is switched ON/OFF by the time clock and/or a 24 Volt room thermostat. The pump circuit also has a 6 minute over-run time. There is a Domestic Hot Water flow switch fitted and when there is a demand for Domestic Hot Water (flow of more than 0.5 gallon/minute, 2.5 litre/minute) the Central Heating pump is switched off making available the maximum output of the gas burner for Domestic Hot Water. On the P.C.B. the maximum output for Central Heating can be set. This does not influence the maximum output for domestic hot water. At the factory the central heating output is pre-set to maximum. The appliance is not suitable for external installation.
This appliance can also be installed using the Ferroli two pipe flue system providing flue lengths up to 20 m (see flue options instructions).

Related Documents

This appliance must be installed strictly in accordance with these instructions:

The Gas Safety Regulations (Installations & Use) 1994.

The Local Building Regulations.

British Gas - "Guidance notes for the installation of domestic condensing boilers".

The Building Regulations.

The Buildings Standards (Scotland - Consolidated) Regulations.

British Standards Codes of Practice:

B.S.	7593	1993	TREATMENT OF WATER IN DOMESTIC HOT WATER CENTRAL HEATING SYSTEMS
B.S.	5546	1990	INSTALLATION OF HOT WATER SUPPLIES FOR DOMESTIC PURPOSES
B.S.	5440	PART 1	FLUES
B.S.	5440	PART 2	AIR SUPPLY
B.S.	5449	1990	FORCED CIRCULATION HOT WATER SYSTEMS
B.S.	6798	1987	INSTALLATION OF GAS FIRED HOT WATER BOILERS
B.S.	6891	1989	GAS INSTALLTIONS
B.S.	7671	1992	IEE WIRING REGULATIONS
B.S.	4814	1990	SPECIFICATION FOR EXPANSION VESSELS

Model Water Bye Laws.

Technical data

	NATURAL GAS (G20)
Nominal heat input (gross caloric value)	26.6 kW
Nominal heat output	22.6 kW
Nominal heat output condensing (30-50°C)	24.2 kW
Minimum heat input (gross caloric value)	11.9 kW
Minimum heat output	9.7 kW
Minimum heat output condensing (30-50°C)	10.7 kW
Gas rate	2.53 m^3S/h
Burner setting pressure	16 mbar (max.)
Minimum burner pressure	3.5 mbar (min.)
Main injector Ø	20 x 0.875 mm
Dimensions (o/all)	
Height	1040 mm
Width	480 mm
Depth	360 mm
Weight (net)	65 kg
Weight (gross)	67 kg
Electricity supply:	230V - 50 Hz
Fuse rating:	
Mains	3 Amp. (main fuse)
on P.C.B. in boiler	F2 Amp (Fast)
Electrical input	150 Watt
Domestic Hot Water flow:	
(35°C rise)	9.2 l/min.
Minimum Domestic Hot Water Flow	2.5 l/min.
Maximum domestic cold water Inlet pressure:	10,0 bar
C.H. Safety valve pressure setting	3 bar
C.H. Expansion vessel capacity	7 litre
Min. heating circuit pressure	0,8 bar
Max. heating circuit pressure	3.0 bar
Boiler water capacity:	
Heating	2.5 litre
Domestic hot water	0.8 litre
Pipe connections:	
Gas	22 mm
Domestic cold water inlet	15 mm
Domestic cold water outlet	15 mm
Central heating flow	22 mm
Central heating return	22 mm
Pressure relief valve drain	15 mm
Condense drain pipe (rubber hose)	20 mm
Min. installation clearances. Sides:	
Left hand	5* mm
Right hand	5* mm
Front	50** mm (plus access for service)
Min. height from worktop to base	200 mm

* If using a side outlet flue then the minimum clearance on the flue outlet side of the appliance is increased to 75 mm (3 in.)
** Access to the front of the boiler must be available for maintenance (min. 600 mm)

Appliance Dimensions

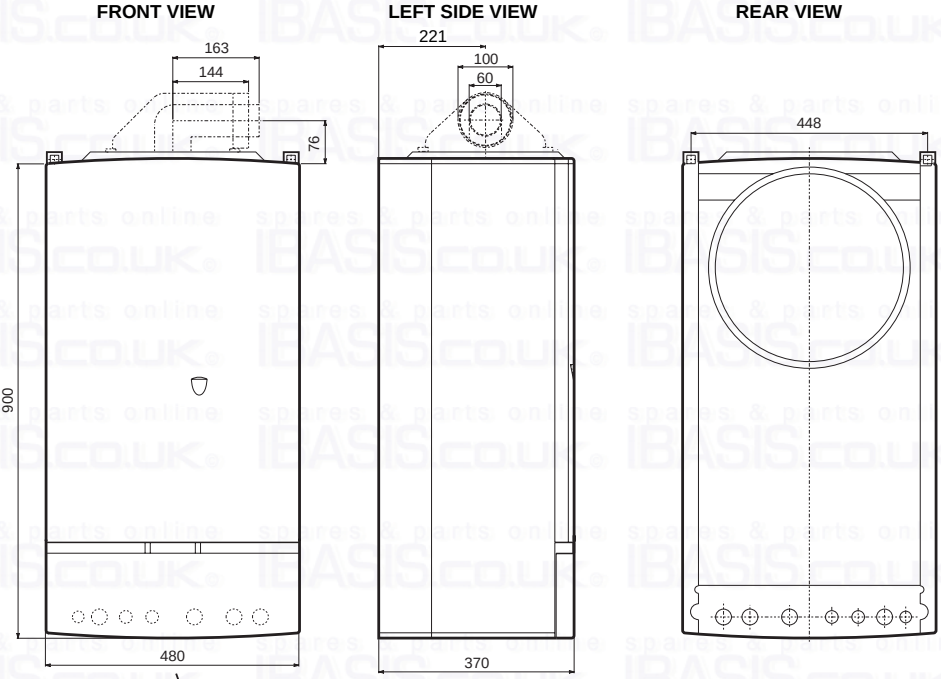

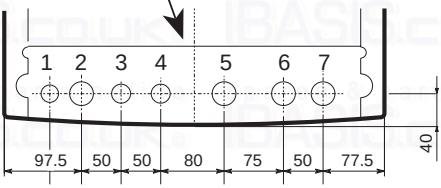

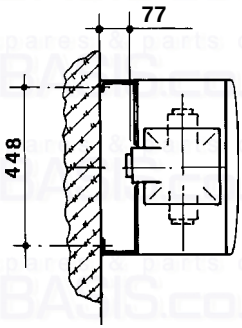

TOP VIEW

Key

1. Electricity cable entry
2. Gas supply
3. Domestic Hot Water outlet
4. Domestic Cold Water inlet
5. Central Heating Pressure relief valve
6. Central Heating Flow outlet
7. Central Heating Return inlet

Fig. 1

Boiler Flow Diagram

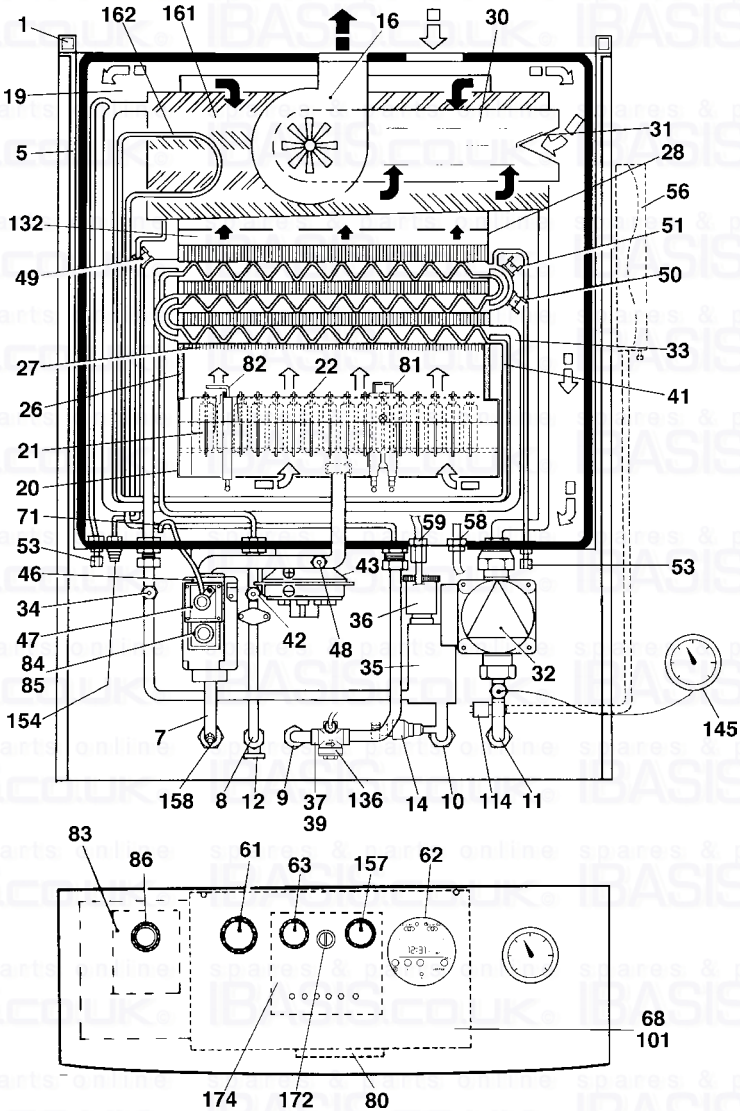

Fig. 2

Key

1. Fixing point
5. Room sealed compartment
7. Gas inlet
8. Domestic hot water outlet
9. Cold water inlet
10. Central heating flow outlet
11. Central heating return inlet
12. D.H.W. draining point
14. Central heating safety valve
16. Fan
19. Combustion - heat exchanging compartment
20. Burner assembly
21. Main injector
22. Burner
26. Combustion chamber insulation
27. Copper heat exchanger for C.H. + D.H.W.
28. Flue collector from heat exchanger
30. Flue/surplus air collector
31. Air pressure control damper
32. Central heating pump
33. C.H. waterway of the heat exchanger
34. C.H. flow temperature sensor
35. Air separator
36. Automatic air vent
37. Cold water inlet filter
39. Cold water flow limiter
41. D.H.W. waterway of the heat exchanger
42. D.H.W. temperature sensor
43. Air pressure switch
46. Operator gas valve
47. Modulating regulator (Modureg) gas valve
48. Burner pressure test point
49. Overheat cut-off thermostat
50. Central heating limit thermostat
51. Central heating frost thermostat
53. Heat exchanger venting point
56. Expansion vessel
58. Fan air outlet pressure test point
59. Flue outlet pressure test point
61. C.H. selector switch
62. Time clock
63. C.H. boiler thermostat
68. Control box with P.C.B.
71. Modulating balance tube
80. 230 V + 24 V roomstat terminal blocks
81. Ignition electrode
82. Flame sensing electrode
83. Automatic ignition control panel
84. 1. gas valve operator 230 V
85. 2. gas valve operator 230 V
86. Automatic control reset knob
100. Fault diagnostic/temperature control panel
101. P.C.B. (printed circuit board)
114. Water pressure switch
132. Flue deflector
136. Flowmeter
145. C.H. pressure gauges
154. Condense drain pipe
157. D.H.W. thermostat
158. Gas inlet pressure test point
161. Condensing heat exchanger
162. D.H.W. coil
172. Setting OTC curve
174. Fault dignostic/temperature control panel with outside temperature compensation

Installation Details

Gas Safety (Installation & Use) Regulations: 1994

In the interest of safety, it is the law that all gas appliances are installed by a competent person in accordance with the above Regulations, Building Regulations/Building Standards Scotland, Codes of Practice, current I.E.E. Regulations and the byelaws of the Local Water Undertaking. Failure to comply with the Regulations may lead to prosecution; it is in your interest and that of safety to ensure that the law is complied with.

Important - If the boiler is to be fitted in a timber framed building it should be fitted in accordance with the British Gas publication; Guide for Gas Installation in Timber Frame Housing: Reference DM2. If in doubt advice must be sought from the Local Gas Region of British Gas Plc.

Location of Boiler

The installation of the **OPTIMA 2001** must be on a suitable non-combustible load bearing wall which will provide an adequate fixing for the boiler mounting bracket assembly. The location should be in an area where the water pipes will not be subjected to frost conditions. In siting the combination boiler the following limitations **must** be observed:

The combination boiler may be installed in any room or internal space, although particular attention is drawn to the requirements of the current, i.e. wiring regulations and in Scotland the electrical provisions of the building regulations applicable in Scotland, with respect to the installation of the combination boiler in a room or internal space containing a bath or shower.

Where a room sealed appliance is installed in a room containing a bath or shower any electrical switch or appliance control utilising mains electricity, should be so situated that it cannot be touched by a person using the bath or shower.

Terminal Position

POSITION	MINIMUM SPACING (fig. 3)	mm
A	Directly below an openable window, air vent, or any other ventilation opening	300
B	Below gutters, soil pipes or drainpipes	75
C	Below Eaves	100
D	Below a Balcony	100
E	From vertical drainpipes or soilpipes	75
F	From internal or external corners	100
G	Above adjacent ground or balcony level	100
H	From a surface facing the terminal	600
I	Facing another terminal	1,200
J	From opening (door/window) in carport into dwelling	1,200
K	Vertically from a terminal on the same wall	300
L	Horizontally from a terminal on the same wall	300
N	Below carport	600

A Quinnel Barrat and Quinnel guard (part. No. C2) should be screwed to the wall centrally over the terminal, when the distance is less than 2 m from the outside floor.

Air Supply

The room in which the boiler is installed does not require a purpose provided vent. If the boiler is installed in a cupboard or compartment, permanent air vent are required in the cupboard or compartment, one at high level one at low level, either direct to the outside air to a room. Both high and low level air vents must communicate with the same space.

Minimum effective area requirements of compartment air vents (for cooling purposes only) (fig. 4).

Condensate

The boiler condensate should, if possible, be discharged into the household internal draining system, that is, sink or washing machine drain. If this is not practicable, discharge can be external, into the household drainage system or a purpose designed soak away. Shade condensate hose into a "U" prior to entering drainage system to form a water trap. See fig. 5.
Refer to British publication "Guidance notes for the installation of domestic condensing boilers" for further information.

Terminal Position

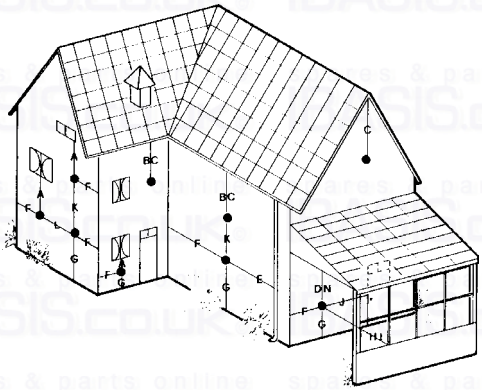

Fig. 3

Air supply

APPLIANCE FLUE SYSTEM / APPLIANCE LOCATION	ROOM-SEALED	AIR VENT AREAS
IN ROOM	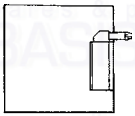	NIL
IN COMPARTMENT OPEN TO ROOM	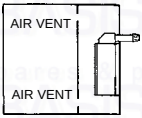	HIGH LEVEL: 238 cm² (37 in.²) LOW LEVEL: 238 cm² (37 in.²)
IN COMPARTMENT OPEN TO OUTSIDE	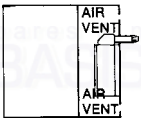	HIGH LEVEL: 119 cm² (18 in.²) LOW LEVEL: 119 cm² (18 in.²)

Fig. 4

Minimum Clearance mm

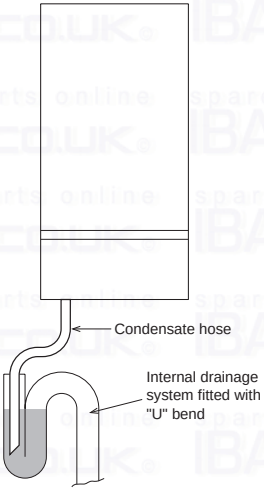

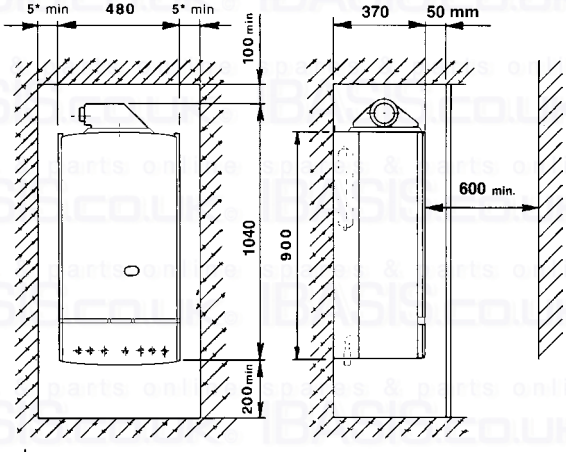

Fig. 5

NOTES

* If a side outlet flue is to be used, a clearance of 75 mm will be needed on the flue outlet side of the boiler.

** Access to the front of the boiler must be available for maintenance (min. 600 mm).

Flue system
The boiler allows the flue outlet to be taken from the rear of the boiler or from either side.

A standard flue length of 0.75 metres is provided. Alternative lengths of two or three metres can be supplied (equivalent to wall thicknesses of up to 565, 1815 and 2815 mm for rear flues and deduct 91 mm plus distance from side wall for side outlet flues).

It is absolutely **essential**, to ensure that products of combustion discharging from the terminal cannot re-enter the building, or enter any adjacent building, through ventilators, windows, doors, natural air infiltration, or forced ventilation/air conditioning.

The flue must be installed with a fall of: 35 mm per metre (2°) towards the boiler, see fig. 12.

Gas Supply
If necessary the local Gas Region should be consulted, at the installation planning stage, in order to establish the availability of an adequate supply of gas.

An existing service pipe must **not** be used without prior consultation with the Local Gas Region.

A gas meter can only be connected by the Local Gas Region, or by a Local Gas Region's Contractor.

Installation pipes should be fitted in accordance with BS6891-1988.

Appliance inlet working pressure must be 20 mbar MINIMUM.

Pipework from the meter to the combination boiler must be of an adequate size, minimum 22 mm.

The boiler requires 2.65 m^3/h (93.6 ft^3/h) of natural gas.

Do not use pipes of a smaller size than the combination boiler inlet gas connection.

The complete installation must be tested for gas soundness and purged as described in BS6981-1988. All pipework must be adequately supported. An isolating gas valve is provided and should be fitted on the manifold assembly.

Water System

Central Heating
It must be a sealed system. Detailed recommendations are given in BS6798, BS5449, BS6700 and CP342 Part. 2. Pipework not forming part of the useful heating surface should be insulated to prevent any heat losses or possible freezing (i.e. in roof spaces or ventilated underfloor spaces). Drain taps should be positioned at the lowest point of the system in accessible locations to permit the whole system to be drained down. The drain taps should be in accordance with BS2879. Copper tubing to BS2871, Part. 1 is recommended for water carrying pipework. Pipework in horizontal runs should have a gradient where possible to facilitate the removal of air. It should be ensured that the boiler heat exchanger is not a natural point for collecting air. A typical heating system with domestic hot water circuit is illustrated in fig. 6.

Important - A bypass must be fitted to ensure a minimum flow rate through the boiler of 6 l/min. The bypass should be fitted as far as possible from the boiler if thermostatic radiator valves are fitted throughout.

Make up Water
Provision must be made for replacing water lost from sealed system. Reference should be made to BS6798, for methods of filling and making up sealed systems. There must be no direct connection between the boiler's central heating system and the mains water supply. The use of mains water to charge and pressurise the system directly, is conditional upon the Local Water Byelaw. Again any such connection must be disconnected after use.

Domestic Hot Water
Always fit a water softener or descaler in «hard water areas». A 15 mm copper connection point on the boiler jig bracket for attaching to the main supply is provided. The maximum domestic water pressure for the inlet supply is 10 bar (145 P.S.I.). If the cold mains supply exceeds 5 bar (72 P.S.I.), a water governor or pressure reducing valve must be fitted by the installer into the mains supply in an inconspicuous but accessible position preferable between 3 and 5 metres (10-16 ft) before the appliance.
Such a valve must be approved by the Water Research Council.

Attention - Is drawn to the Model Water Byelaws.

Fittings manufactured from duplex (alpha-beta) brass are not acceptable for underground use and certain water undertakings will not accept their use above ground.

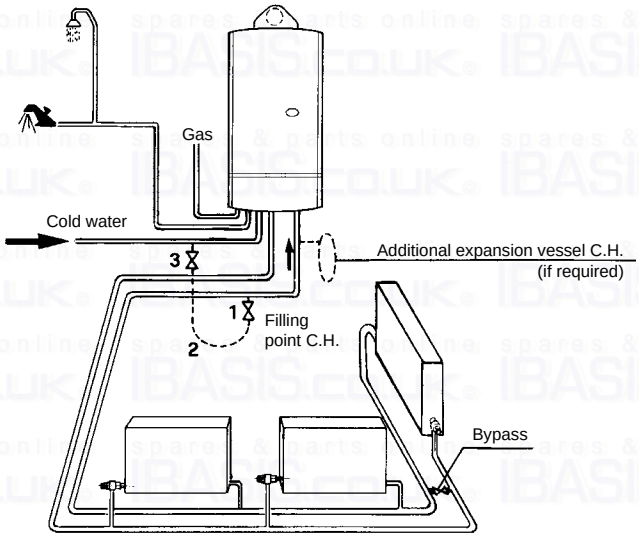

Fig. 6

NOTE: A bypass must be fitted as far as possible from the boiler if thermostatic radiator valves are fitted throughout.

TEMPORARY FILLING LOOP

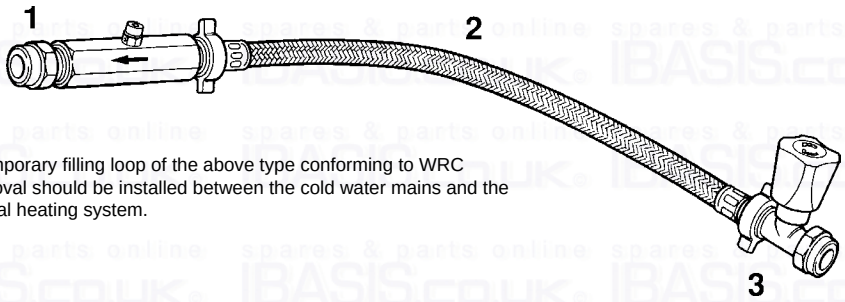

A temporary filling loop of the above type conforming to WRC approval should be installed between the cold water mains and the central heating system.

Key
1. Filling point C.H.
2. Temporary connection
3. Cold water supply

Fig. 7

Built-in Central Heating Water Circulating Pump

The pump head available for circulating the water is given in fig. 8.

N.B. - The pump is factory set at position 3. The pump is a Grundfos type 15-50 UPS series.

Grunfos Pump performance graph

Note - Minimum flow through boiler heat exchanger at any time should not fall below 6 litres per minute.

If required an additional expansion vessel may be fitted to the central heating return inlet.

If the total volume of water in the system exceeds 40 litres an additional expansion vessel must be fitted to the central heating return inlet.

Pump performance curve Grundfos UPS 25-60

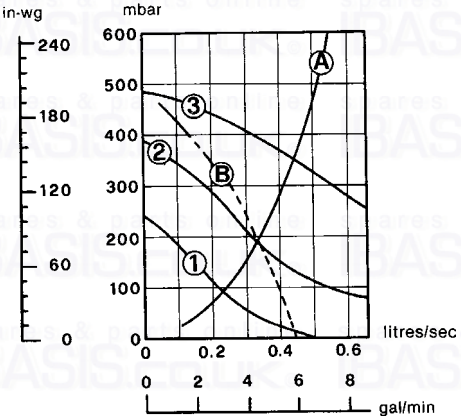

1 2 3 Speed settings
A Boiler pressure drop
B Max. available pump head C.H.

Fig. 8

SAFETY VALVE SETTING (bar)	3.0					
VESSEL CHARGE PRESSURE (bar)	0.5			1.0		1.5
INITIAL SYSTEM PRESSURE (bar)	1.0	1.5	2.0	1.5	2.0	2.0
TOTAL WATER CONTENT of SYSTEM	EXPANSION VESSEL VOLUME (litres)					
LITRES						
25	3.5	6.5	13.7	4.7	10.3	8.3
50	7.0	12.9	27.5	9.5	20.6	16.5
75	10.5	19.4	41.3	14.2	30.9	24.8
100	14.0	25.9	55.1	19.0	41.2	33.1
125	17.5	32.4	68.9	23.7	51.5	41.3
150	21.0	38.8	82.6	28.5	61.8	49.6
175	24.5	45.3	96.4	33.2	72.1	57.9
200	28.0	51.8	110.2	38.0	82.4	66.2
For syst. volumes other than those given above, mult. the syst. volume by the factor across	0.140	0.259	0.551	0.190	0.412	0.33

SIZING OF ADDITIONAL EXPANSION VESSELS:
Deduct from the value given in the table the 7 litre vessel supplied.

Note

1. Fill C.H. installation to min. 1.5 bar.
2. Select by preference the expansion vessel for increased system pressure of 2.0 bar
3. Expansion vessel must be fitted to Central Heating Return Inlet
4. The standard 7 litres expansion vessel is charged to 1 bar

Fig. 9

Installation

Note - To mount the boiler on the wall, a two person lift will be needed.

1.0 UNPACKING

The appliance is delivered in 2 cartons.

1.1 The large carton contains the boiler, and the Installation/Servicing and Users Instructions.

1.2 The second carton contains the mounting jig assembly, complete with isolating valves, the assembly fixing screws and wall plugs (x4), the boiler mounting nuts and washers (x2), drilling template, flue assembly and turret.

When the cartons are unpacked examine for any signs of damage in transit. All protective plastic should be left in place until installation is complete.

2.0 FIXING THE MOUNTING JIG ON THE WALL (Rear Wall Flue Applications)

2.1 Select the boiler location carefully ensure that all requirements given in previous text are satisfied. Fig. 10 will also give guidance to fixing dimensions.

2.2 Locate template on wall, mark the positions of the four jig bracket fixing holes and the flue opening.

2.3 Carefully cut the circular hole (118 mm minimum diameter) for the flue assembly.

2.4 Using a 10 mm drill, drill 70 mm deep holes to accept the wall plugs, and insert wall plugs.

2.5 Fit the top and bottom brackets using the four fixing screws provided (Ensure that all the service cocks are in the OFF position). Operate valves several times to ensure they are free.

2.6 With the exception of the connection to the pressure relief valve, make all the water and gas connections to the jig bracket valves. Fully tighten (fig. 11). Water connections can be made with compression or capillary fittings.

3.0 FIXING THE MOUNTING JIG ON THE WALL (Side Wall Flue Applications)

3.1 Select the boiler location carefully ensuring that all the requirements given in previous text are satisfied. Fig. 10 will aso give guidance.

3.2 Locate the template on wall and mark the position of the four jig bracket fixing holes.

3.3 Using a 10 mm drill, drill 70 mm deep holes to accept the wall plugs, and insert wall plugs.

3.4 Fit the top and bottom brackets using the four fixing screws provided.

3.5 Extend a horizontal line from the centre of the rear flue outlet to the side wall.

3.6 Mark the centre line (vertically) for the flue assembly hole, and mark the centre of the hole.

3.7 Carefully cut the circular hole (118 mm minimum diameter) for the flue assembly.

Important Note - Always use two spanners to prevent twisting of soft copper pipework on the boiler.

Flush out the water system.

Note - The maximum inlet cold water pressure must not exceed 10 bar (145 P.S.I.) and a water governor or a pressure reducing valve will be required if the pressure is in excess of 5 bar (72 P.S.I.).

Ensure all pipework is adequately supported.

Drilling template

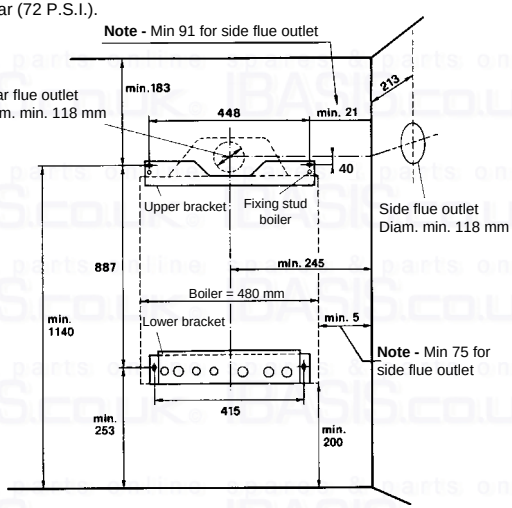

Fig. 10

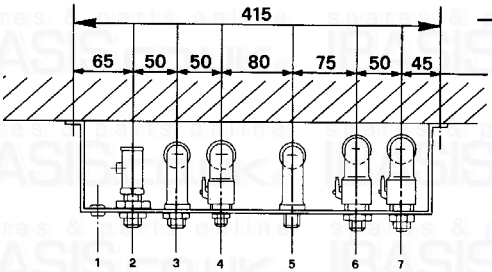

1 = Electrical cable entry
2 = Gas supply
3 = Domestic Hot Water outlet
4 = Domestic Cold Water Inlet
5 = Outlet Central Heating safety valve
6 = Central Heating flow outlet
7 = Central Heating return inlet

2 = 22 mm
3-4-5 = 15 mm
6-7 = 22 mm

2 Gas 22 mm

3 Domestic Hot Water outlet 15 mm

5 Outlet central heating safety valve 15 mm

4 Domestic Cold Water inlet 15 mm
6 Central Heating flow outlet 22 mm
7 Central Heating return inlet 22 mm

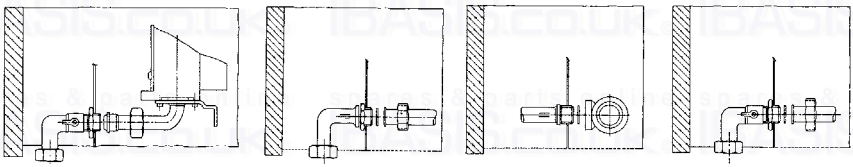

Fig. 11

Important Note - Always use two spanners to prevent twisting of soft copper pipework.

Note - The central heating safety valve (5) should be piped 15 mm to discharge safely outside the property.

4.0 PREPARING THE FLUE ASSEMBLY

4.1 **Rear Flue Outlet** (fig. 12)
Important - The aluminium flue pipe must protrude into the outside grill by 2 in (50 mm), never cut it to the same length as the plastic air pipe (aluminium flue pipe = plastic air inlet pipe + 50 mm !).

Aluminium flue pipe length = Plastic air inlet pipe length plus 50 mm (2") longer.

4.1.1 Accurately measure the Wall thickness (P1)
4.1.2 From the end opposite to the terminal, cut the plastic air duct (dimension A1) to length (P1 + 105 mm).
Note - That the terminal is **not** included in A1.
4.1.3 Cut the metal flue duct to length (P1 + 155 mm) (dimensions F1).
Note - The metal flue pipe must be 50 mm (2 inches) longer than the plastic air inlet pipe.
4.1.4 Drill a 3 mm hole 15 mm from the plain end of plastic air duct.
4.1.5 Place flue components to one side to be used later.

4.2 **Side Flue Outlet** (fig. 13).

Important - The aluminium flue pipe must protrude into the outside grill by 2 in (50 mm), never cut it to the same length as the plastic air pipe.

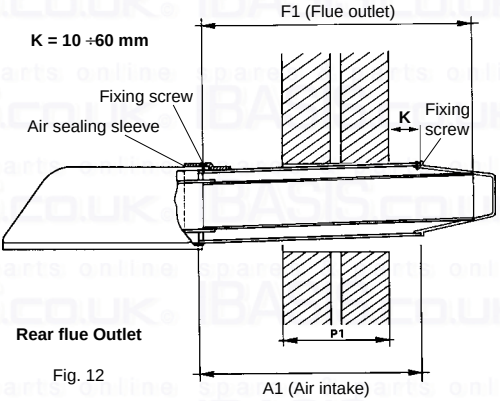

Rear flue Outlet

Fig. 12

Make sure flue slopes 2° down towards the boiler that is 35 mm fall per metre of flue length

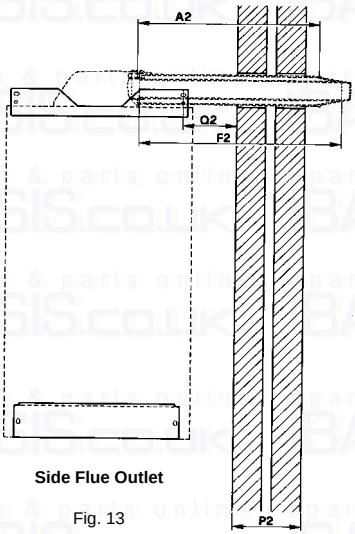

Side Flue Outlet

Fig. 13

Aluminium flue pipe length = Plastic air inlet pipe length plus 50 mm (2") longer.

4.2.1 Accurately measure the Wall thickness (P2).
4.2.2 Accurately measure the distance from the centre of the stud fixing of the mounting jig assembly to the side wall (Q2).
4.2.3 From the end opposite to the terminal, cut the plastic air duct (dimension A2) to length (P2 + Q2 + 125 mm).
Note - That the terminal is **not** included in length A2.
4.2.4 Cut the metal flue duct to length (P2 + Q2 + 175 mm) (dimension F2).
Note - The metal flue pipe must be 50 mm (2 inches) longer than the plastic air inlet pipe.
4.2.5 Drill a 3 mm hole 15 mm from the plain end of plastic air duct.
4.2.6 Place flue components to one side to be used later.

5.0 CONNECTING THE BOILER

5.1 Place the boiler on its back.

5.2 Remove the boiler base plate, four screws (fig. 16). Remove the plugs fitted to the boiler water connections. Remove the bag of sealing washers from the boiler pipework. Remove the front panel by gripping on both sides, slide up to disengage lugs and pull away.

5.3 Lift boiler as shown in fig. 15 onto the top studs and fit supplied nuts and washers hand tight.

5.4 Lift at bottom to engage the water and gas connections. Tighten central heating flow and return, and the domestic hot water inlet and outlet, using appropriate sealing washers. Tighten the gas union.

5.5 Screw the pressure relief valve adaptor provided, through the jig bracket into the valve, using the remaining washer (fig. 17).

5.6 Connect the pressure relief valve discharge pipe (15 mm) to the outside of the building, where possible over a drain. The discharge must be such that it will not be hazardous to occupants or passers-by cause damage to external electric components or wiring. The pipe should be directed towards the wall.

5.7 Connect the condensate hose to discharge into the internal household drainage system as shown in fig. 5. Refer to British Gas Publication "Guidance notes for the Installation of Domestic Condensing Boilers" for further information.

It must not discharge above an entrance or window, or any type of public access. The installer must consider that the overflow could discharge boiling water.

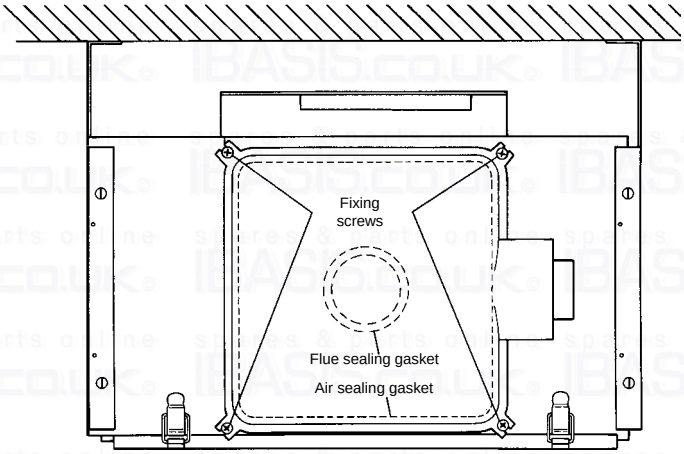

TOP VIEW BOILER SIDE OUTLET

Fig. 14

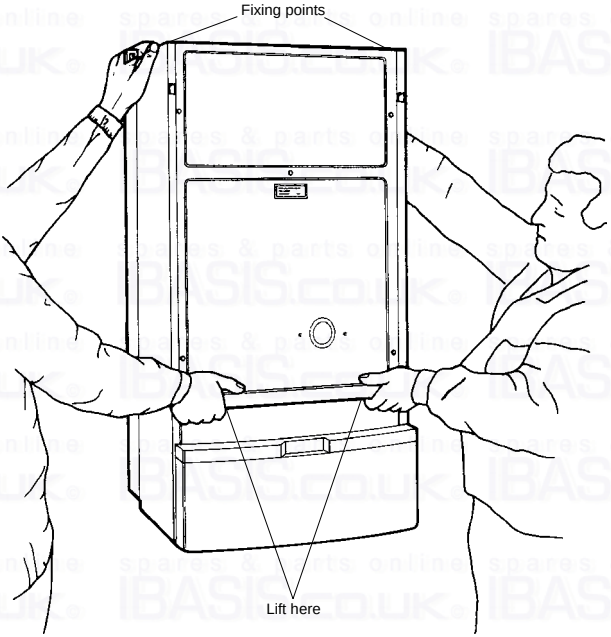

Fig. 15

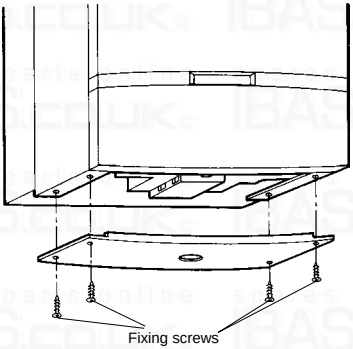

Fig. 16

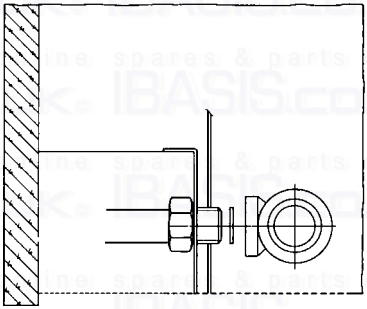

Fig. 17

6.0 FITTING THE FLUE ASSEMBLY

6.1 **With Sufficient Clearance To Insert Assembly From Inside**

6.1.1 Push the air duct seal onto the air duct at the cut end.

6.1.2 Insert the flue assembly into the wall ensuring a 2° slope back to the boiler.

6.1.3 Make good internal wall face.

6.1.4 Fully insert the flue assembly into the turret spigot. Insert the self tapping screw supplied. Fully tighten.

6.1.5 Secure the turret.

6.1.6 Slide the air duct seal over the joint.

6.1.7 Check the terminal relationship with the wall as shown in fig. 12.

6.1.8 Make good the outside wall face, re-weatherproof.

6.2 **With insufficient Clearance To Insert Assembly From Inside**

6.2.1 From outside, push flue duct, then the air duct through the wall.

6.2.2 Push the air duct seal over the air duct.

6.2.3 Fully insert the flue duct into the turret, then the air duct. Slide, back the seal and secure the air duct with the self tapping screw provided.

6.2.4 Slide the seal over the joint and secure the turret.

6.2.5 Continue as detailed in 6.1.8 above.

7.0 ELECTRICAL INSTALLATION

Electrical installation must be carried out by a competent electrician. The appliance is to be connected to a 230 V ~ 50 Hz supply (see fig. 18). The supply fuse rating is 3A. The terminals are accessible after removing the white base plate and single screw securing the terminal cover (see fig. 18).

7.1 **Procedure**

7.1.1 The supply cable must be no less than 0.75 mm (24x0.2 mm) to BS6500 table 16.

7.1.2 The earth conductor must be cut longer than the live and neutral (fig. 19).
Connect the Supply Cable to the terminal block marked 230 V ~ 50 Hz, L, N, the supply cable is to be connected as follows:

i) Connect the brown wire to the L (live) terminal).

ii) The blue wire to the N (neutral) terminal.

iii) The green/yellow wire to the (earth) terminal.

7.1.3 Secure the cable with the cable clamp. The supply cable can be connected to the mains supply by the use of an unswitched shuttered socket-outlet in conjunction with the 3A fused 3 pin plug both in accordance with BS 1363. This provides complete isolation. Alternatively, a fused double pole switch having a contact separation of at least 3 mm, in all poles and provided just for the boiler and its external controls can be used. A wiring diagram is provided on the appliance, attached to the rear of the front panel. In addition, there is one in this manual (fig. 25). Attention is drawn to the requirements of the current I.E.E. Regulation and in Scotland, the electrical provisions of the Building regulations.

7.2 **Room Thermostat** (fig. 18) (or remote time clock connection)

7.2.1 Please note that the room thermostat, clock switch connection is 24 V. To connect mains voltage to these terminals will seriously damage the printed circuit board. The room thermostat and clock switch connector block is situated within the connector box. Twin core cable should be used for this connection (terminals 4 and 5).

7.2.2 If using a remote 230 Volt time clock ensure that the motor and switch connections are totally separate in the clock and that the switch connections are independent for the 24 Volt terminals (4 and 5) on the boiler.

External controls: room stat or remote time clock in the place of loop terminals 4 and 5. Please note 24 V only, use only voltage free contacts.

IMPORTANT

If 230 V is connected to terminals 4 or 5, damage will be caused to the P.C.B.

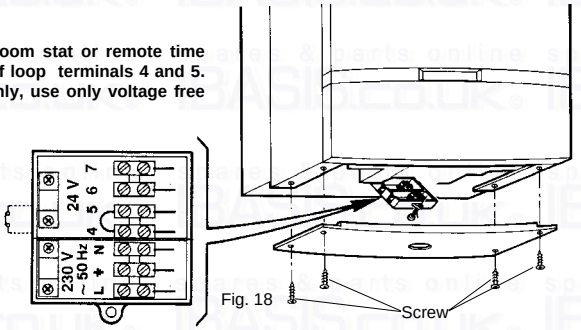

Fig. 18

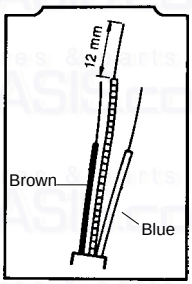

Fig. 19

7.3 External compensation sensor (optional)

7.3.1 To be wired to terminals 7 and 8 on the appliance connector box (see fig. 18), low voltage twin wire can used.

7.3.2 External sensor location

The external sensor should be installed on the North, North-West wall or on the one facing the majority of the main living rooms in the building.
The sensor must never be exposed to the first morning sunlight. It must never be subjected to direct sunlight and should be protected if necessary.
In no case may the sensor be mounted near windows, doors, ventilation openings, stacks or heat sources which could alter its reading.

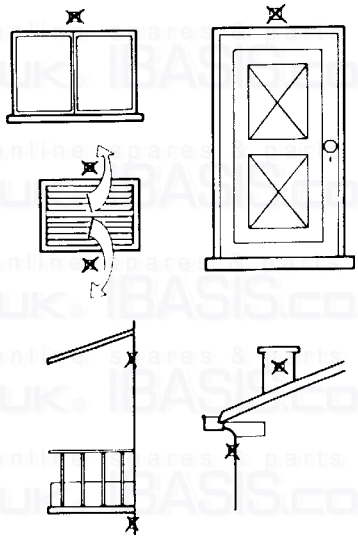

Fig. 19a

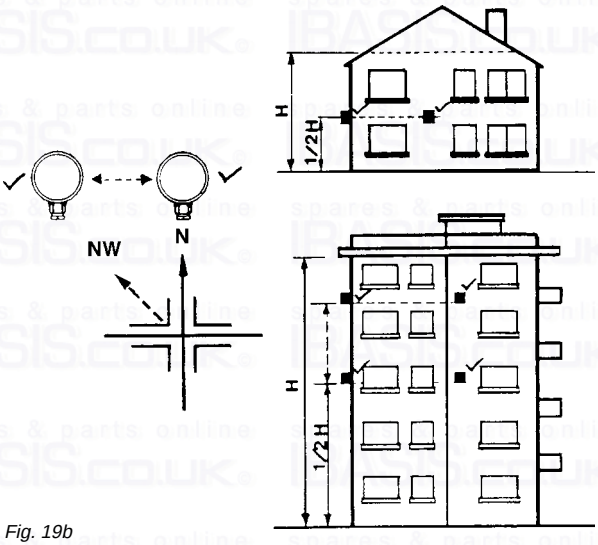

Fig. 19b

7.4 Setting of compensation curve

The boiler can now be regulated to ensure the design critia of the system is matched to the outside temperature

7.4.1 Consult the outside compensation graph provided (fig. 19c)

7.4.2 Following the bottom ouside temperature line to find the outside temperature. The system is designed for.

7.4.3 Trace a line vertically until you reach the designed system flow temperature.

7.4.4 Read from the graph the number setting that the boiler is to be adjusted to. If the setting is between two numers this can be set on the boiler, say between 2 and 3.

7.4.5 Remove the plastic cover of the outside compensation adjustment screw on the boiler facia panel (fig. 19d)

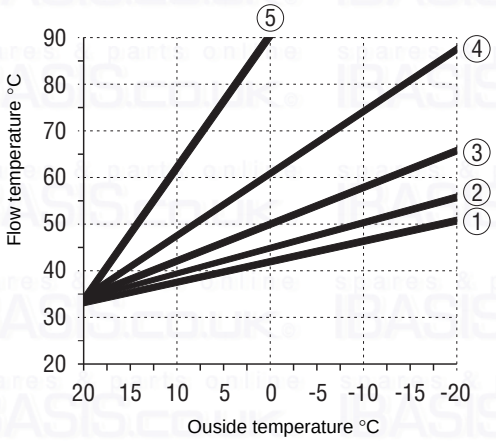

Fig. 19c

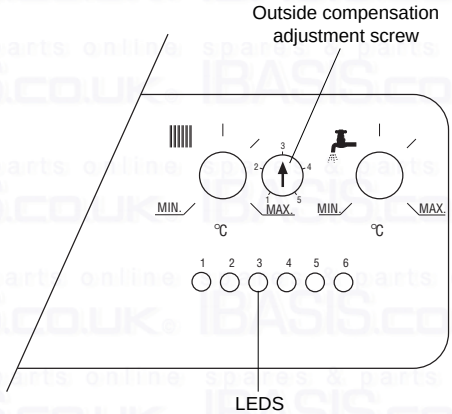

Fig. 19d

7.4.6 By use of a small screwdriver set the arrow on the adjustment screw to desired setting

8.0 COMMISSIONING AND TESTING

8.1 Filling the Central Heating System

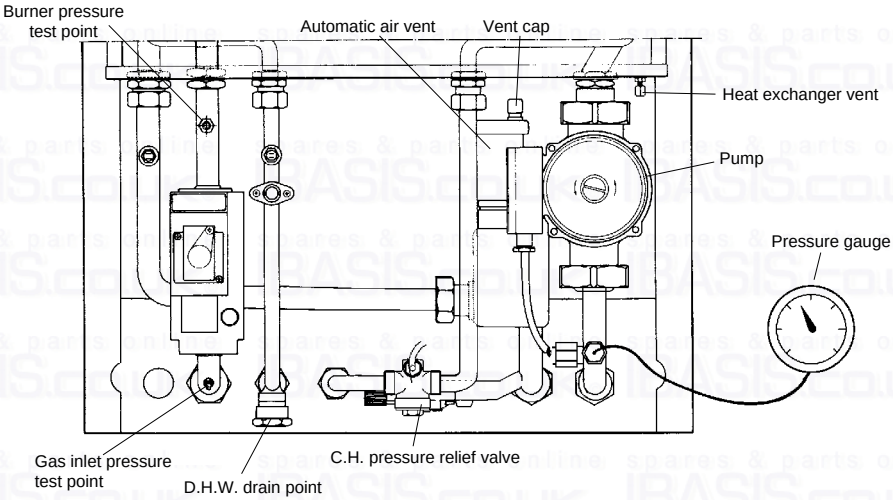

Fig. 20

Remove the top front panel by gripping both sides, slide up to disengage lugs and pull away.
Loosen the cap of the automatic air vent (fig. 20) and leave it loose.
Open the central heating flow and return cocks (fig. 11).
Gradually fill the system as detailed in Make up Water.
While filling, vent the heat exchanger at venting point by loosening cap (fig. 20) and vent each radiator.
Tighten cap on heat exchanger air vent.
Ensure the working pressure, when filled, is between 1 to 1.5 bar on the pressure gauge (see technical data).
Check the system for leaks.
Flush system in accordance with BS 7593.

8.2 Filling the Domestic Hot Water System

Close all hot water draw off points. Open main cold water stop cock and ensure the cold water inlet cock is open at the boiler jig bracket (fig. 11). Slowly open each hot tap in turn until clean water, free from air pockets, is seen.
Check system for leaks.

8.3 Electricity Supply

Carry out preliminary checks (i.e. earth continuity, polarily short circuit and resistance to earth using a suitable multimeter).

8.4 The Gas Installation

The whole of the gas installation including the meter, should be inspected and tested for soundness, and purged in accordance with the recommendations of BS6891-1988.

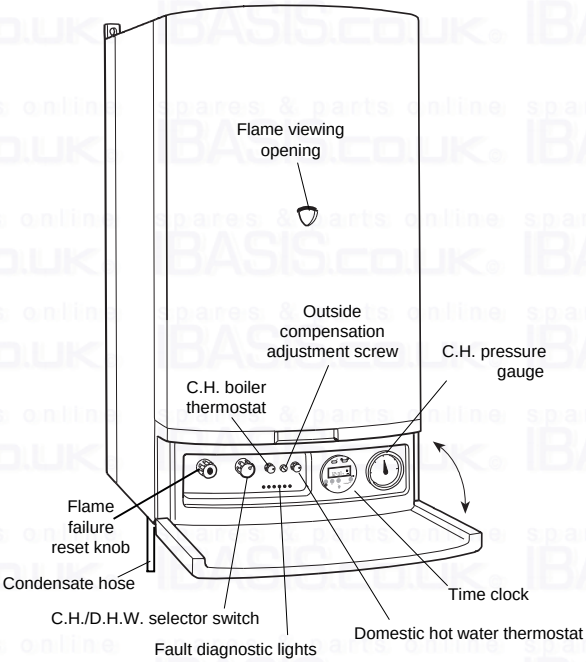

fig. 21

8.5 **To Light the Boiler** (fig. 21)

a. Open controls panel door.
b. Switch on electricity supply.
c. Adjust room thermostat and all external controls to «ON». Check operation of pump.
d. Turn the boiler thermostat to maximum. Fan will run (A waiting time of max 3 minutes before fan will run is possible!), and main burner will light.
e. Temporarily turn off by switching off electricity supply.

Important Note: If the burner stops for C.H. only after a waiting time of 3 minutes will the boiler will light again!

Burner Pressure C.H. and D.H.W.

8.6 **To Range Rate the Boiler C.H. (not required for standard installations).**
The boiler can be range rated for an output from 9.7 kW (33,000 btu/h) up to 22.6 kW (77,000 Btu/h). When the boiler is supplied it is factory set at the maximum output 22.6 kW (77,000 Btu/h).

Procedure

a. Release the control panel fixing screws (fig. 30) and lower panel.
b. Loosen the screw in the burner pressure test point (fig. 22) and attach a gauge.
c. Switch on the electricity supply to relight the main burner.

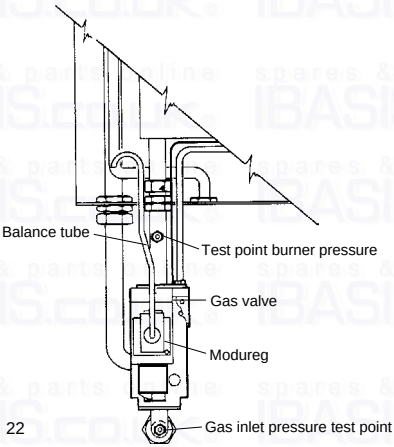

Fig. 22

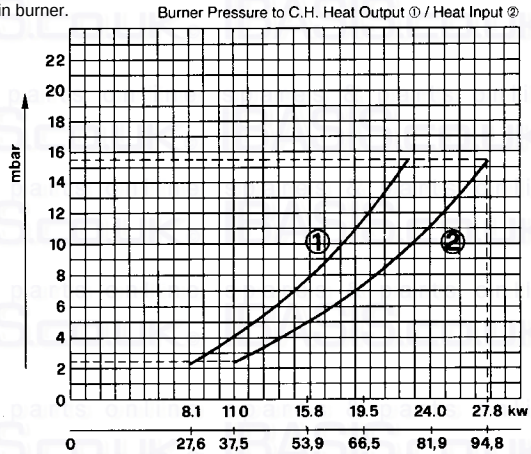

Fig. 23

Note 1 - Modulation is available on central heating, so the procedures must be carried out while the system is relatively cold. Recheck boiler thermostat is set to maximum.

d. Adjust the potentiometer P1 on the PCB (fig. 24) in the control panel until the required burner pressure is obtained (Anticlockwise to reduce the pressure).

Note 2 - Short circuit 12-13 only on connector X3 on the P.C.B.
- Boiler starts for C.H.
- Waiting time is excluded

Note 3 - The range of inputs with corresponding burner pressure is given on the Data badge which is situated behind the top front panel. Further informations is on (fig. 23).

e. With the pressure set, turn off the electrical supply and mark the set input on the Data badge (with sticker supplied).

Burner Pressure C.H. and D.H.W.
P1 = C.H. range rating to be set on site (if required)
P2 = D.H.W. temperature (factory set, not to be adjusted)
P1 Adjust with screwdriver!

JP1 Not Fitted
JP4 Not fitted

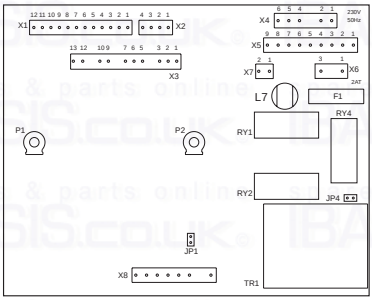

Fig. 24

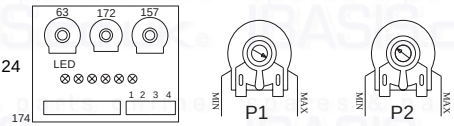

Honeywell VR 4605 NA 4003 valve with V7335A4014 Modureg

Gas pressure Adjustment

1 - **With the burner lit:**
2 - Connect suitable pressure gauge to burner test point "B", and then:
3 - Disconnect air pressure compensation tube **"H"**;
4 - Disconnect the wires from coil **"C"** of the Modureg;
5 - Remove protective cover **"D"**;
6 - Remove coil **"C"** by opening the coupling spring **"I"**;
7 - Screw the minimum adjustment screw **"E"** up tightly. (clockwise)
8 - Unscrew lock nut **"F"** on sleeve **"G"**;
9 - Adjust maximum pressure by rotating sleeve **"G"** clockwise to increase pressure and anticlockwise to reduce pressure;
10 - Tighten sleeve lock but **"F"** then check that the pressure is still at the required value;
11 - Adjust minimum pressure by rotating screw **"E"** anticlockwise until the required value is reached;
12 - Fit coil **"C"** by sliding it into the sleeve, pushing and rotating it lightly until the coupling spring **"I"** clicks into place;
13 - Shut down and ignite the burner, checking that the minimum pressure value is stable;
14 - Reconnect the wires to coil **"C"** of the Modureg;
15 - Reconnect air pressure compensation tube **"H"**;
16 - Replace protective cover **"D"**;
17 - Turn burner off, remove pressure gauge, close and test, test point;

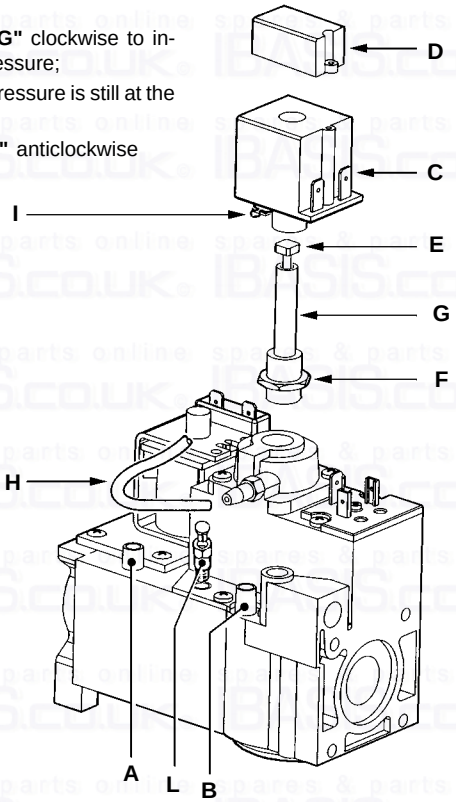

Key
A - Test point inlet pressure
B - Burner test point
C - Coil
D - Protective cover
E - Minimum adjustment screw
F - Lock nut
G - Sleeve
H - Pressure compensation tube
I - Coupling spring
L - Adapter (for only G.L.P. version)

8.7 **D.H.W. Burner Pressure**

The domestic hot water burner pressure is not range rateable and not adjustable but the maximum and minimum burner pressure should be checked as follows:

a. Check electricity supply is still off.
b. Open a D.H.W. tap at high flow until the water runs cool and leave running.
c. Switch on the electricity supply.
d. The pressure should be 16 mbar -/+ 0.5 mbar.
e. Disconnect one of the wires from the «Modureg» (fig. 22), this will reduce the burner to minimum which should read 3.5 mbar +/- 0.5 mbar. If the burner pressure is not as stated check the inlet working pressure (fig. 22) which should be minimum 20 mbar. If that is correct, consult Ferroli. No attempt should be made to alter D.H.W. burner pressure.
f. Switch off electrical supply and close hot tap.
g. Reconnect the wire to the «Modureg». Remove pressure gauge, tighten the test screws.
h. Replace control panel (2 screws).
i. Turn on electricity supply, open a hot tap to full flow and when the burner lights, test for gas soundness with a leak detection fluid around the gas valve and connections including the pressure test point screws.

9.0 SYSTEM OPERATION

Let the boiler operate normally on central heating for about 30 minutes.

I) Vent radiators.
II) Vent heat exchanger.
III) Examine all pipework for leakage, also check for leaks from the condensate drainage system.
IV) Turn on a D.H.W. tap and check that the C.H. pump stops running.
V) As the D.H.W. temperature reaches 60°C check the burner for modulation.

Switch off electricity.
Drain down the central heating system fully, when hot. Following BS 7593 - 1993
Refill the system as previously instructed. Repeat the venting.
Examine the system's water pressure and top up as necessary.
Replace the casing front panel and close the control panel cover.

10.0 HANDING OVER TO THE USER

After completion of installation and commissioning of the system:

a. Hand over the User's Instructions' to the Householder and explain His/Her responsability under the Gas safety (Installation and Use) Regulations 1984.
b. Explain and demonstrate the lighting and shutting down procedure.
c. Explain the operation of the boiler including the use and adjustment of ALL system controls.
Advise the User of the precautions necessary to prevent damage to the system and to the building, in the event of the system remaining inoperative during frost conditions.
d. Stress the importance of regular servicing by a qualified Heating Engineer and that a comprehensive service should be carried out at LEAST ONCE A YEAR.

Important:

Advise the user that the Optima 2001, like all other condensing boilers will produce a plume of condensation from the flue terminal in cold weather, this is quite normal.

OPTIMA 2001

FERROLI

Wiring diagram

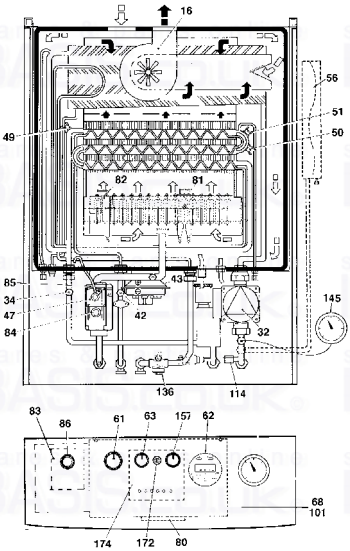

16 Fan
32 Central heating pump
34 C.H. flow temperature sensor
42 D.H.W. temperatuure sensor
43 Air pressure switch
47 Modulating regulator (MODUREG) gas valve
49 Overheat cut-off thermostat
50 Heat exchan. limit thermostat
51 Heat exchan. frost thermostat
56 Expansion vessel
61 C.H. selector switch
62 Time clock
63 C.H. boiler thermostat
68 Control box with P.C.B.
72 Room thermostat (not fitted)
80 Five pole terminal 240V + 24V
81 spark electrode
82 Flame sensing electrode
83 Automatic ignition control panel
84 1. gas valve operator
85 2. gas valve operator
86 automatic control reset knob
101 P.C.B.
114 Water pressure switch
136 Flowmeter
138 Outside temperature sensor
145 C.H. pressure gauge
157 D.H.W. thermostat
169 Suppression filter
172 Setting OTC curve
174 Fault diagnostic/temperature control panel with outside temperature compensation

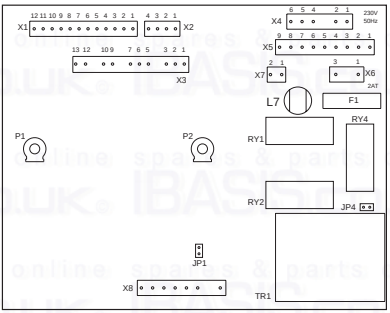

JP1 and JP4: Jumpers
JP1 Is not required
JP4 Is not required

P1 = C.H. max. output (to be set on site)
P2 = D.H.W. temperature (factory set)

61. C.H. selector switch

Heating timed and hot water | Hot water only | Heating continuous and hot water

NOTE:
THE TRANSFORMER ON THE P.C.B. HAS A BUILT-IN OVERHEAT PROTECTION.
IF THIS IS OPEN, ALL LED'S WILL BE OFF BUT THE C.H. PUMP (32) WILL RUN
SWITCH OFF THE BOILER FOR AT LEAST 20 MINUTES

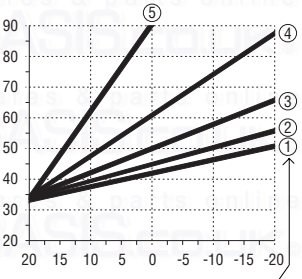

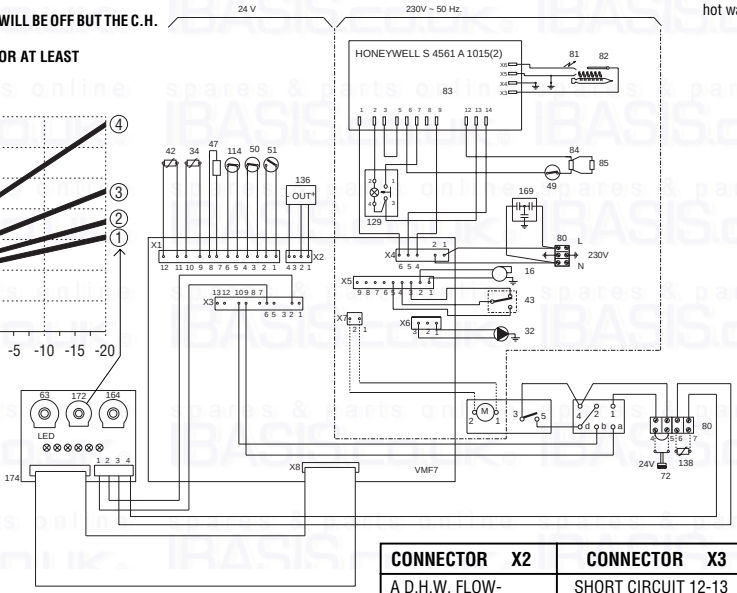

CONNECTOR X7
1-2 = 230 V

CONNECTOR X2	CONNECTOR X3
A D.H.W. FLOW-SWITCH (ON-OFF) CAN BE CONNECTED	SHORT CIRCUIT 12-13 - BOILER STARTS FOR C.H. - WAITING TIME IS EXCLUDED

General Notes - For use on the OPTIMA 2001 fitted with VMF7 Printed Circuit Board

*The central heating pump (32) will run to disperse heat if the temperature at the heat exchanger limit thermostat (50) is too high
*The frost thermostat (51) will switch on the boiler for central heating if the temperature is too low.
*Fuse on P.C.B.: 2 Amp.

RY not energised

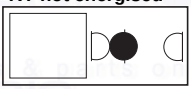

RY energised

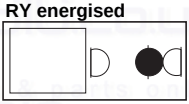

RELAY RY	
RY1	central heating pump
RY2	on/off relay
RY4	fan

Note

If RY1 is not energised the Central Heating pump will run

LED n°	signification:
1	Mains on/low voltage on
2	Flowmeter (136) on
3	Central heating room thermostat (72) / clock (62) calling
4	Sensor (34) or (42) calling for heat
5	Central Heating waiting time, max. 3 minutes delay following shut off
	Boilerstat (63), Clock (62), Roomstat (72) or use of Hot Water
6	Demand for heat - relay (RY2) will be energised
7	Air pressure switch (43) on, air flow checked

Jumpers JP1 - JP4		
	Fitted	Not fitted
JP1	No waiting time	Waiting time on
JP4	Fan control High & Low speed	Fan control High speed only/off

OTS (138) = Outside temperature sensor

	temp.	Ohm	OTS(138)	Ohm
Temp. sensor (34) (42)	10° C	890 ohm	-10°C	55K
	25° C	1000 ohm	0°C	32K
	60° C	1300 ohm	10°C	20K
	80°C	1490 ohm	20°C	12,5K
			30°C	8K

Check operation using LED's as a fault finding guide. First check section A, then B, then C, then D.
0 = LED off 1 = LED on x = LED either on/off is not important

A — Domestic Hot water tap open (Flow rate greater than 2,5 l/min)

LED	OK	FAULT	POSSIBLE CAUSE OF FAULT
1	1	0	No mains electricity/switches off/fuse blown.
2	1	0	D.H.W. flowmeter (136) not operating.
3	X	X	Not required for D.H.W.
4	1	0	- D.H.W. sensor (42) not connected or D.H.W. temperature too high
5	0	1	- Waiting time operating: replace P.C.B.
6	1	0	Short circuit on D.H.W. sensor (42) or resistance lower than 500 Ohm
			- C.H. limit thermostat (50) open circuit (pump run)
			- C.H. water pressure low (114 open circuit)

B — CENTRAL HEATING ON Room stat (72) at Max, HW tap closed

LED	OK	FAULT	POSSIBLE CAUSE OF FAULT
1	1	0	No main electricity/switches off, fuse blown.
2	0	1	Hot water tap open - D.H.W. flowmeter (136) contact closed
3	1	0	Roomstat (72) or clock (62) not calling for heat
4	1	0	- Central heating sensor (34) not connected or
			- boiler temperature too high or
			- boiler thermostat (61) below CH temperature
5	0	1	Waiting time still operating (max. 3 minutes)
6	1	0	- C.H. sensor (34) short circuit or resistance lower than 500 ohm
			- C.H. limit thermostat (50) open circuit (pump will run)
			- C.H. water pressure low (114 open circuit)

C — GENERAL TEST FOR D.H.W. AND CENTRAL HEATING (First check A and B above)

LED/REL.	OK	FAULT	POSSIBLE CAUSE OF FAULT
RY2	energised	not energised	Check first A and B above
RY4	energised	not energised	Air pressure switch (43) not in NC position or miswired:
			- check wiring
			- fan (16) at low speed remove jumper JP4
7	1	0	- fan (16) not running at full speed or
			- air flow too low:
			- air pressure switch (43) faulty

D — IGNITION OF BURNER (AUTOMATIC IGNITION)

1. Fan (16) should run at full speed (open hot tap or set controls so boiler is calling for heat).
2. Check first A, B and C above (LED 6 is ON?)
3. Check spark and position of spark electrode (81)
4. Check position of flame sensing electrode (82)
5. Check burner gas pressure during ignition

General fault finding

Engineer Please Check

1. Gas available (check kitchen and gascocks)
2. Electrical mains is on.
3. Water pressure Central Heating System (min. 1 bar on pressure gauge)
4. Water flow domestic hot water (min. 0.5 Gal/min - 2.5 L/min.) (fills a 1 pint milk bottle max. 15 seconds).
5. Is central heating pump running.
6. Air inlet/flue outlet free from obstacles.
7. Are all service cocks open?
8. Is at least one radiator valve or bypass in Central Heating system open?

Always follow the complete General test Procedure to make sure that no fault remains unnoticed.

Never disconnect any wire without previous testing. It is possible that a fault disappears after disconnecting and rewiring the electrical connections, this fault will return.

Never pull on the wires in the terminals.
To disconnect the terminal pull on the insulation cover, keeping the terminal pushed back.

The relays on the P.C.B. can be checked. The relays have transparent covers and the position of the contacts can be verified (to see if a relay is energised or not see fig. 28).

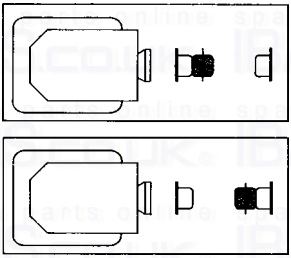

Top view relay

Fig. 28

Replacement of Parts

1.0 INITIAL PROCEDURE

Before work commences ensure that:

a) The boiler is cold, electricity supply is isolated, and the gas supply is turned off at the inlet of the boiler (fig. 1).

b) For replacement of parts where water connections are broken, it will be necessary to isolate and drain either or both the central heating or domestic hot water circuits of the boiler only. The cold water mains inlet is isolated at the inlet cock (fig. 1). The D.H.W. is drained via drain cap (fig. 34).
The C.H. flow and return cocks are turned off at the isolation cocks (fig. 1). The C.H. is drained via the pressure relief valve (twist about 1/2 of a turn).

Important

c) Upon completion of the work the following (details of which are included in the commissioning section):
Should be checked:

I) Gas soundness of all joints.
II) Water soundness of all joints.
III) The electricity supply.
IV) The pressure of the sealed system and top up where necessary.

d) Replace all components in reverse order, observing any special notes given.

e) **Removal of Outer Casing**

Note - It may not be necessary to remove all the outer casing. Refer to individual sections for the extent to which the outer case needs to be removed.

f) **Front Panel**
Grip on both sides and lift away from the main boiler assembly.

g) **Base Plate**
Remove the four fixing screws (fig. 16).

h) **Side Panels**
For each panel, remove two fixing screws at base of appliance and single fixing screw at top of appliance (fig. 30).
Also remove hinged control panel cover.

Note - The panels are located in keyhole slots, push panels upwards and pull away.

i) **Removal of Combustion Chamber Outer Cover**
Remove the five combustion chamber outer cover fixing screws and undo four buckle clips (fig. 30) to remove cover.

j) **To Remove Control Panel**
Hinge control panel cover downwards.
The two control panel securing screws can now be removed (fig. 30), remove C/H and D.H.W. thermostat knobs hinge control panel forwards and disengage from bottom lugs, the control panel can now be removed.

k) **To lower control box frame**
Remove screw securing gas control valve to frame.
Remove the base plate (g) above.
Remove the two screws securing the frame to the back panel.

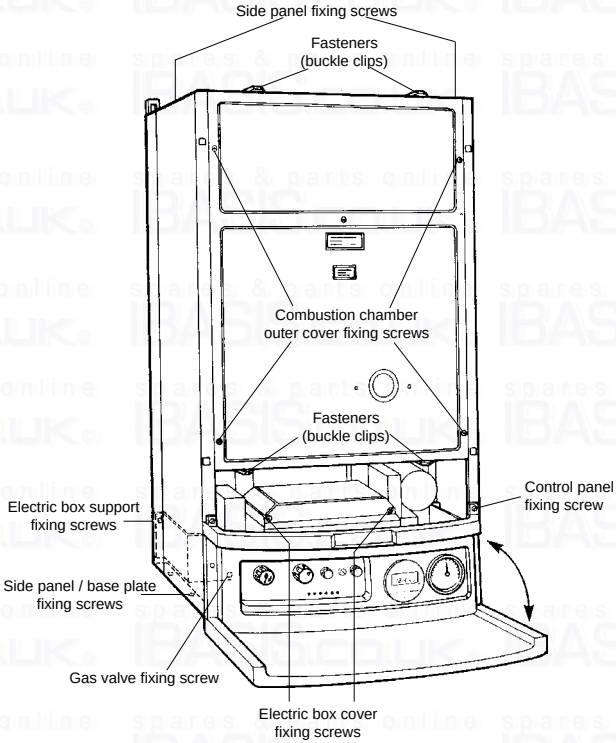

Fig. 30

Details Combustion Chamber

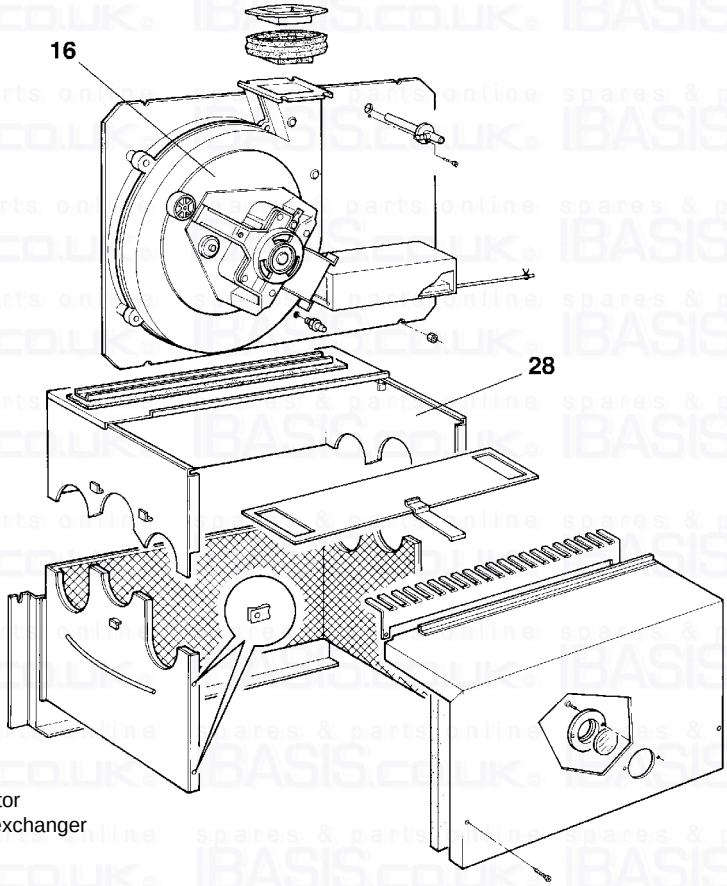

Key

16. Fan
28. Flue collector
from heat exchanger

Fig. 32

Details Burner

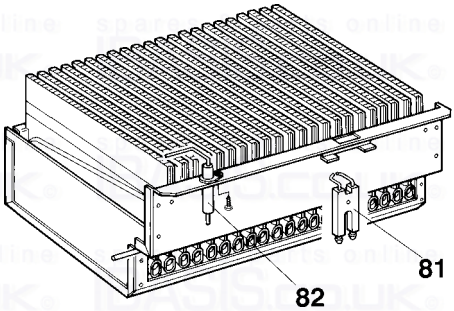

Fig. 33

Key

81. Ignition electrode
82. Flame sensing electrode

2.0 FLOWMETER (Domestic Hot Water) AND FILTER

a) Refer to section 1, items a, b, c, d, f and g (drain D.H.W. only fig. 34).
b) Undo the flow switch unions and carefully lower the flow switch taking care not to lose either the (three) sealing washers, filter or flow restrictor.
c) Disconnect the electrical connections to the flowmeter.
d) Re-assemble in reverse order, ensuring that the filter, flow restrictor and sealing washers are in the correct position (fig. 35). The polarity for the electrical wiring is immaterial.

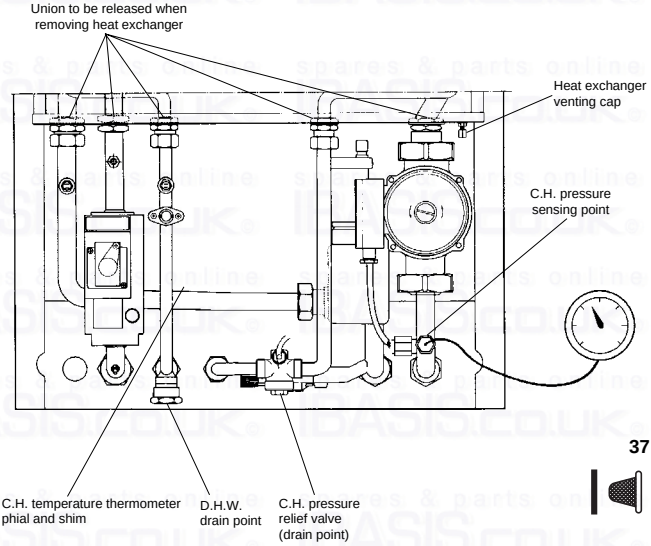

Fig. 34

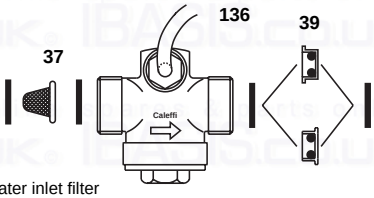

37 Cold water inlet filter
136 Flowmeter
39 Cold water flow restricter

Fig. 35

3.0 HONEYWELL GAS VALVE (fig. 31)

a) Refer to Section 1, items a, c, d, f, g, h (left hand side panel) and j.
b) Disconnect the four electrical connections from the top of the valve.
c) Disconnect modulating balance tube by removing the fixing screw, and gently pull off from the front of the valve.
d) Disconnect the gas supply to the gas valve at the inlet union.
e) Remove the screw securing the base of the gas valve to the control box frame of the appliance.
f) Remove the four Allen screw which secure the inlet supply pipe to the gas valve.
(Take care not to lose the sealing washer).
g) Undo the union which is on the burner supply pipe and withdraw gas valve towards front.
h) Re-assemble in reverse order. Re-connect electrical connection in accordance with the wiring diagram (fig. 25).
i) Fully test the operation of the new gas valve and reset burner pressures as prescribed (see commissioning).

4.0 P.C.B.

a) Refer to section 1, items a, c, d, f and j.
b) Unscrew two fixing screws on the P.C.B. top cover plate, lift and disconnect all connectors from P.C.B. (fig. 39).
c) Unscrew upper fixing screws from P.C.B.
d) Gently pull P.C.B. off mounting studs and remove.
e) Re-assemble in reverse order (Refer to wiring diagram fig. 25).
f) Range rate the boiler C.H. and check the operation of the controls (See commissioning).

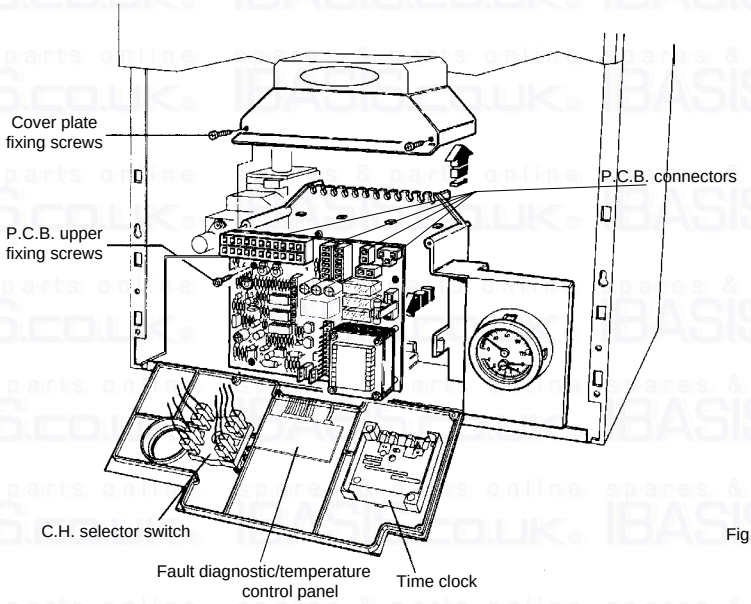

Fig. 39

5.0 CENTRAL HEATING LIMIT THERMOSTAT, OR FROST THERMOSTAT, OR OVERHEAT CUT OFF THERMOSTAT

a) Refer to Section 1, items a, d, f and i.
b) Refer to fig. 2 to identify the location of respective thermostat.
c) Remove two spring clips (with a pair of pliers).
d) Disconnect electrical connections to the thermostat.
e) Re-assemble in reverse order (Polarity Immaterial). Heat sink compound, must be used.

6.0 D.H.W. TEMPERATURE SENSOR OR CENTRAL HEATING TEMPERATURE SENSOR

a) Refer to section 1, items a, b, c, d, f, g, h (left hand side panel) and k.
b) Identify the sensor from fig. 2.
c) Disconnect the electrical connections to the sensor.
d) Unscrew the temperature sensor.
e) Re-assemble in reverse order (Polarity Immaterial).

7.0 PRESSURE RELIEF VALVE

a) Refer to section 1, items a, b, (central heating) c, d, and g.

Note - If this valve is not working correctly then the water can only be drained from the appliance by, removing the pressure relief valve.

b) Release the outlet union to the valve and undo the valve union connection, taking care not to lose the sealing washers.
c) Remove the pressure relief valve outlet fitting.
d) Re-assemble in reverse order, and check the operation of new valve.

8.0 PUMP

a) Refer to section 1, items a, b (central heating), c, d, f, g, h (right hand side panel), j and k.
b) Loosen the two pump union connections.
c) Remove electrical cover on pump, one screw (fig. 40). (Rotate pump to remove cover).
d) Disconnect the live, neutral and earth connection.
e) Release the cable retaining gland and pull the cable clear.
f) Disconnect the two pump union connections. Remove pump (Retain washers if not re-newing).
g) Re-assemble in reverse order (fig. 40).

Note - Ensure the arrow indicating the direction of flow, on the pump housing is pointing upwards, and the speed setting is at 3.

9.0 AUTOMATIC AIR VENT

a) Refer to Section 1, items a, b (central heating), c, d, f, g, h, (right hand side panel) and k.
b) Loosen the pump union connections and swivel the pump to the right.
c) Unscrew the automatic air vent (fig. 2, item 36).
d) Re-assemble in reverse order ensuring the «O» ring is fitted (fig. 41) and that the venting cap is loose. Replace pump ensuring that the arrow indicating flow points upwards.

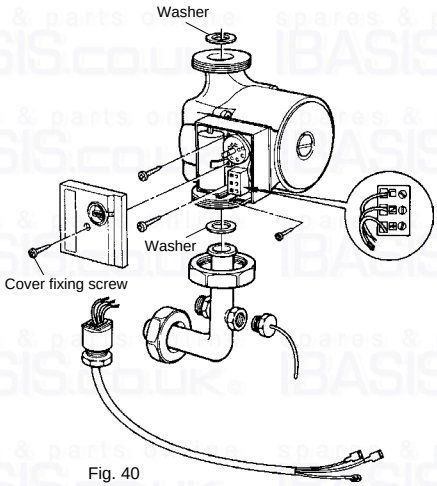

Fig. 40

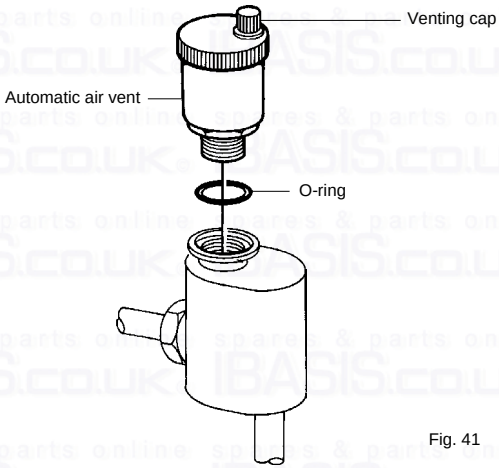

Fig. 41

10.0 PRESSURE GAUGE

a) Refer to Section 1, items a, b, (central heating), c, d, f, g and j.
b) Remove the shim then the temperature sensing phial from its pocket (fig. 37).
c) Unscrew the pressure sensor from its housing (fig. 37). (Access from below).
d) Unscrew the knurled nut from the rear of the gauge, and remove the gauge forwards.

11.0 REMOVAL OF C.H. SELECTOR SWITCH

a) Refer to section 1, items a, c, d, f and j.
b) Disconnect the electrical connections to the selector switch (fig. 42).
c) Pull off selector switch knob.
d) Unscrew the two fixing screws exposed when the knob is removed.
e) Re-assemble in reverse order (refer to fig. 42 for wiring). Check the operation of the new switch.

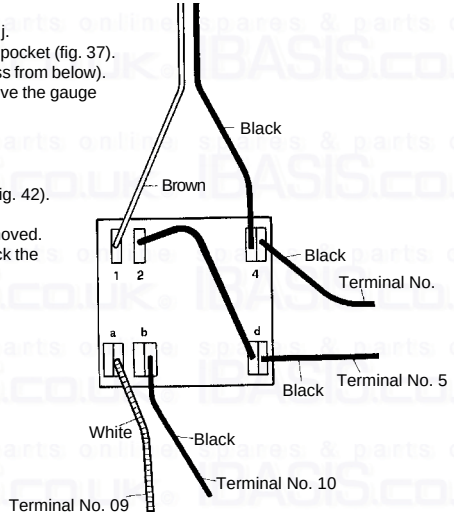

Fig. 42

Time Clock

A 24 hour time clock is fitted to the boiler to control the central heating, this will come into operation when the selector switch is turned to the position marked “heating timed and hot water”.

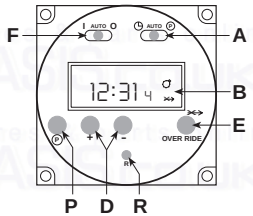

A Slide switch: set clock - auto - set programme
B Display. Symbol in Display = Timer ON
P Select programme ON/OFF 1.....8
D Push buttons Time + Time –
E Override: Boiler will switch ON if boiler is OFF; and OFF if is ON
F I=Heating continuous - AUTO=Heating timed - O=Heating disabled
R Reset (with pencil) only with switch **A** in set clock position

To set time of day

1. Slide switch (**A**) to left position
2. Using button + and – adjust until the correct time is shown on display (**B**).

Pre Set Programmes. The timer is pre programmed with 3 ON and 3 OFF times.

6:30 - 8:30
12:00 - 12:00
16:30 : 23:30

If these are suitable no programming is required and the slide switch (**A**) can be moved to the Auto position and the central heating will be ON for these periods. (12:00 - 12:00 will not switch on the boiler)

To Set Own ON and OFF times. **Symbol ☼ in Display = ON time**

1. Slide switch (**A**) to right position (**P**)

Display 6:30 1 ☼

2. Press button (**P**)

Display 8:30 2

3. Press button (**P**)

Display 12:00 3 ☼

4. Press button (**P**)

Display 12:00 4

5. Press button (**P**)

Display 16:30 5 ☼

6. Press button (**P**)

Display 22:30 6

7. The timer can be programmed with up to 8 ON and 8 OFF times by repeating the above procedure.

1.1 Use buttons + and - to set 1st ON time eg. 6:00

Display 6:00 1 ☼

2.1 Use buttons + and - to set OFF time, eg. 9:00

Display 9:00 2

3.1 Use button + and - to set 2nd ON time, eg. 12:30

Display 12:30 3 ☼

4.1 Use button + and - to set 2nd OFF time eg. 14:00

Display 14:00 4

5.1 Use button + and - to set 3rd ON time, eg. 16:00

Display 16:00 5 ☼

6.1 Use button + and - to set 3rd OFF time eg. 23:30

Display 23:30 6

8. On completion of programming slide switch (**A**) to Auto position, the time of day will be displayed and the central heating will switch ON and OFF according to the programme set.

Over ride

By pressing the over ride button (**E**) the timer programme is over ridden ie, if programme is in OFF time it will come ON and if in ON time will go OFF.

The timer will revert back to it set programme on reaching the next ON or OFF time.

When the programme is on over ride the sign ⤫ will be shown in the display window (**B**).

Reset Button

By the use of a pencil the reset button can be pushed (**R**). This will clear all programmes apart from those factory pre set.

Reset is only possible with switch (A) in set Clock position!

12.0 REMOVAL OF THE CLOCK

a) Refer to section 1, items a, c, d, f and j.
b) Disconnect the electrical connections to the time clock.
c) Remove the time clock from the control panel (fig. 43).
d) Re-assemble in reverse order (refer to fig. 43 for replacement of the time clock).

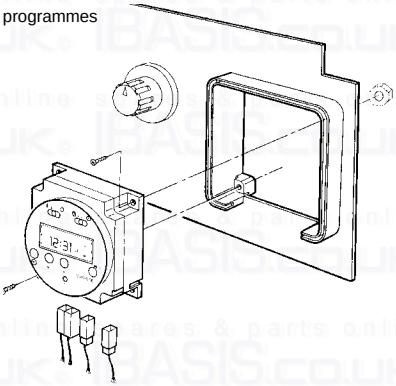

Fig. 43

13.0 REMOVAL OF FAULT DIAGNOSTIC/TEMPERATURE CONTROL

a) Refer to Section 1, items a, c, d, f, and j.
b) Remove P.C.B. top cover by unscrewing the two fixing screws.
c) Pull control box front cover forward
d) Disconnect electrical connections from fault diagnostic control panel
e) Remove rataining nuts from the C.H. and D.H.W.thermostat spindles, remove fault diagnostic/temperature control panel.
f) Re-assemble in reverse order.

14.0 AIR PRESSURE SWITCH

a) Refer to Section 1, items a, c, d, f, and i.
b) Remove the two screws securing the air collection plate (fig. 45), and withdraw the plate complete with the air pressure switch (Take care not to lose «P» clip).
c) Disconnect electrical leads to air pressure switch.
d) Remove pressure sensing tubes.
e) Remove the pressure switch, 2 screws.
f) Re-assemble in reverse order (refer to fig. 46 for wiring).

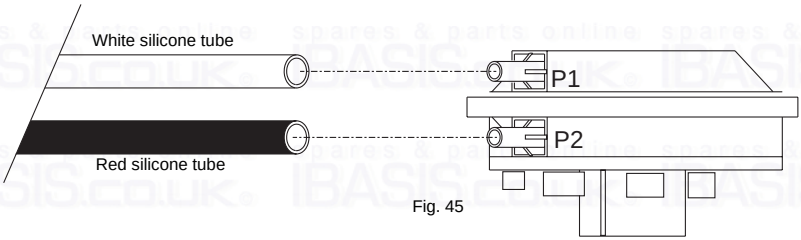

Fig. 45

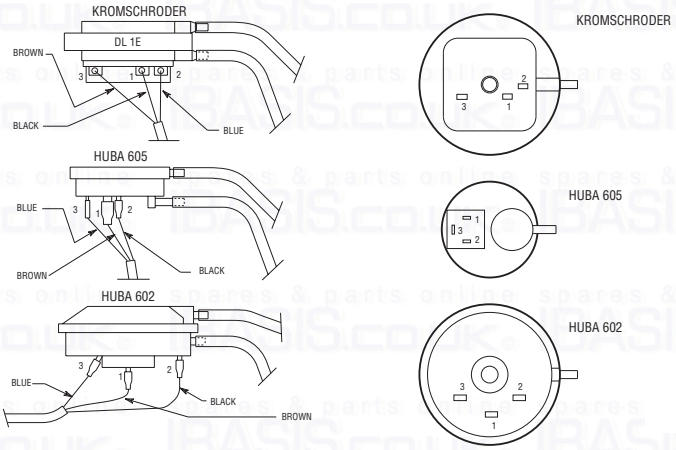

Fig. 46

15.0 REMOVAL AND RE-PRESSURISING OF C.H. EXPANSION VESSEL

Note - If there is less than 500 mm clearance above the boiler or if the boiler has a rear flue outlet then removal of the expansion vessel can only be achieved by first removing the boiler from the wall.

Note - For rear exit flues it is not recommended that the flue and air duct be removed from the wall. Either remove the boiler leaving the ducts in place or insert an equivalent vessel in the **central heating return** to the boiler.

a) Removal of expansion vessel.
I) Refer to section 1, items a, b and c (Drain C.H. side of boiler).
II) Remove the two screws from the expansion vessel securing plate, (fig. 47) which can be found at the top back of the boiler.
III) Undo the compression fitting on the top of the expansion vessel (fig. 47).
IV) Remove the expansion vessel.
V) Re-assemble in reverse order.
b) Re-pressuring of expansion vessel. (Charge pressure 0,8 - 1,0 bar).
I) Close the C.H. flow and return cocks on boiler and drain the boiler (fig. 20).
II) The schrader valve is positioned on the top right hand side of the expansion vessel, behind the inlet connection.
III) Re-open C.H. flow and return cocks and re-charge the system to between 1 & 1,5 bar and vent the boiler and radiators.

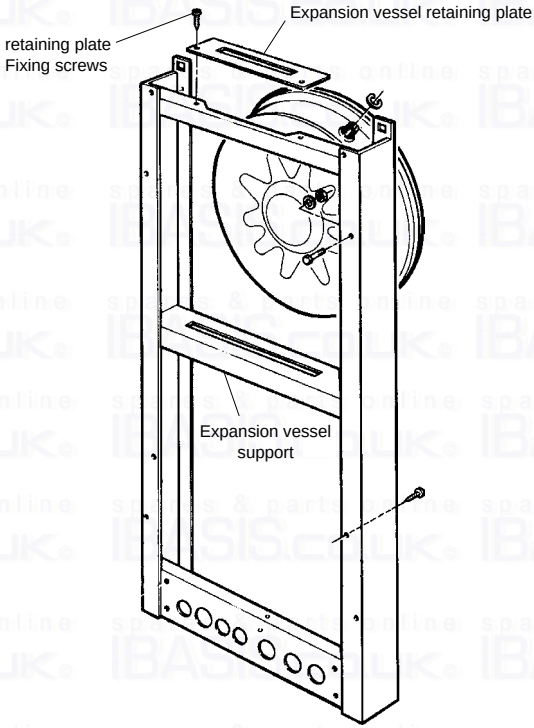

Fig. 47

Exploded view gas line, combustion chamber and draft diverter

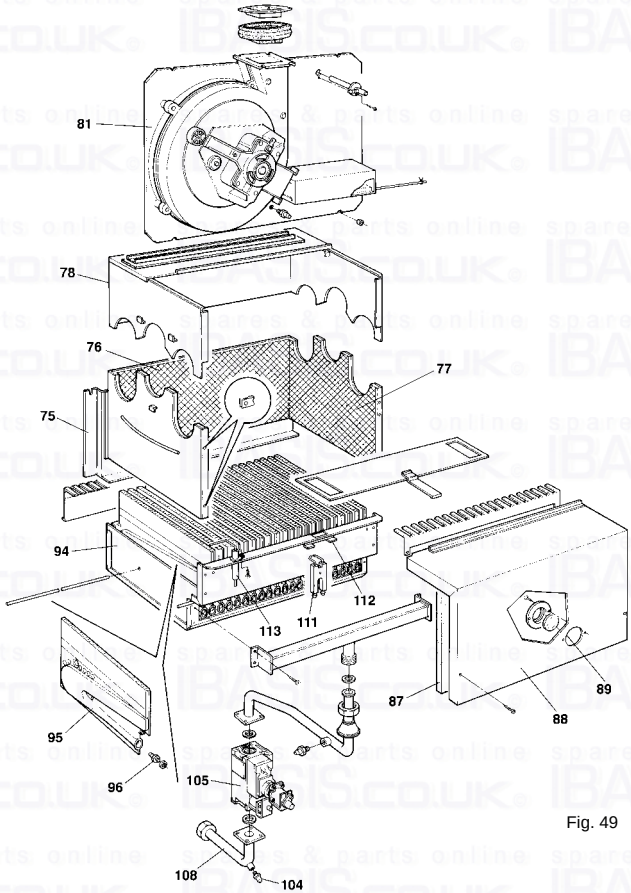

Fig. 49

Key

75 Complete combustion chamber
76 Combustion chamber insulation back panel
77 Combustion chamber insulation side panel
78 Flue collector
81 Fan
87 Panel isolation
88 Combustion chamber panel
89 Glass window
94 Burner box
95 Burner Venturi
96 Injector
104 pressure test point
105 Gas valve
108 Inlet tube gas valve
111 Ignition electrode
112 Ignition electrode support
113 Flame sensing electrode

Exploded view heat exchanger + C.H. and D.H.W. parts

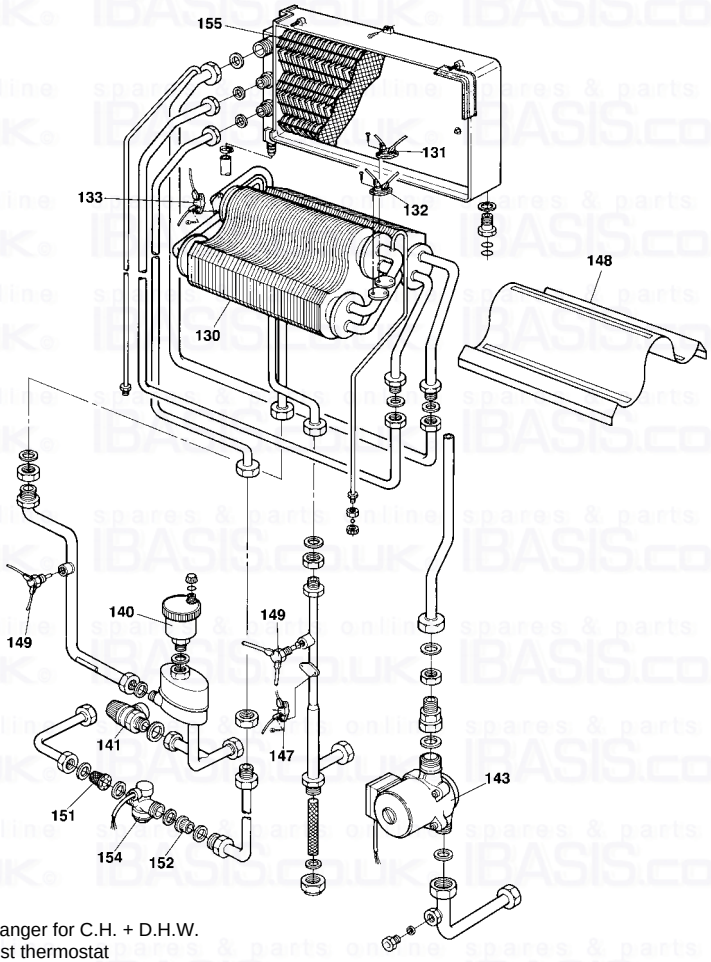

Fig. 50

Key

130 Copper heat exchanger for C.H. + D.H.W.
131 Central heating frost thermostat
132 Central heating limit thermostat
133 Overheat cut-off thermostat
140 Automatic air vent
141 Safety valve
143 Central heating pump
147 D.H.W. limit thermostat
148 Flue deflector
149 Temperature sensor
151 Cold water inlet filter
152 Cold water flow limiter
154 Flowmeter
155 Condensing heat exchanger

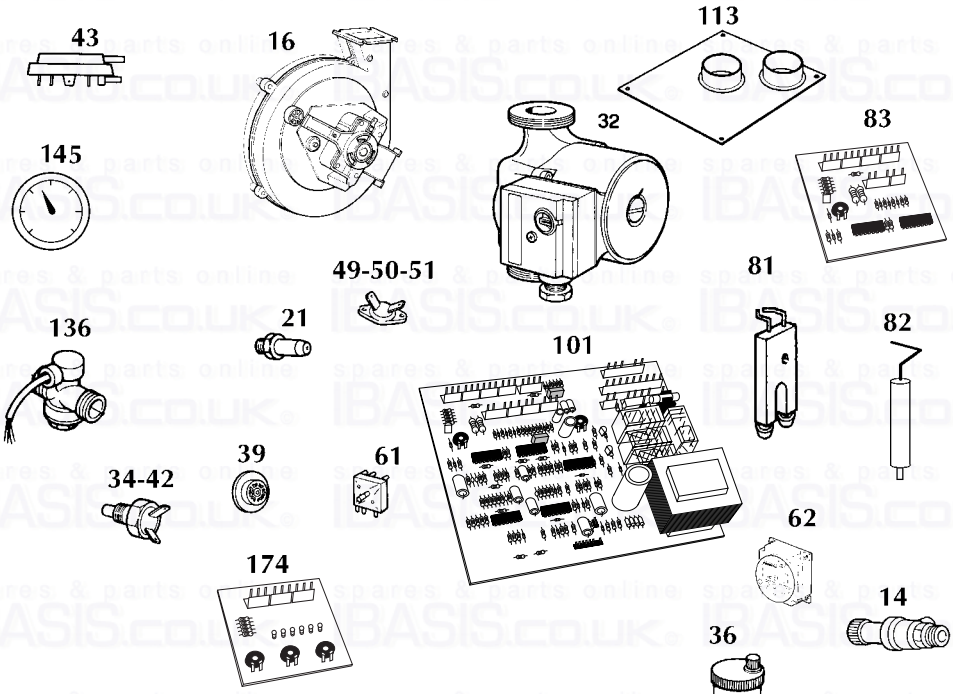

Spare Parts List

Item No.	G.C. Part No.	Makers Part No	No. Off	DESCRIPTION
14	386816	800130	1	C.H. safety valve
16	-	803510	1	Fan
21	-	803710	20	Main injector (Natural Gas)
32	-	803690	1	Central heating pump
34	386818	800310	1	Temperature sensor
36	394246	801160	1	Automatic air vent
39	386829	801220	1	Cold water flow limiter 10 l/min.
42	386818	800310	1	Temperature sensor
43	381691	800140	1	Air pressure switch
44	-	802640	1	Combination gas valve
49	-	800170	1	Overheat cut-off thermostat
50	386577	800160	1	Heat exchanger limit thermostat
51	386828	800180	1	Heat exchanger frost thermostat
61	372225	801230	1	C.H.selector switch
62	-	980383	1	Time clock
81	-	803720	1	Ignition electrode
82	-	803730	1	Flame sensing electrode
83	-	802560	1	Ignition board Honeywell
174	-	803700	1	Fault diagnostic/temperature control panel with outside temperature compensation
101	-	803410	1	P.C.B. VMF7
113	-	1KWMA50U	1	Special two pipe flue/air adapter
136	-	803430	1	Flowmeter
145	-	803890	1	C.H. pressure gauge

Domestic Hot Water Performance

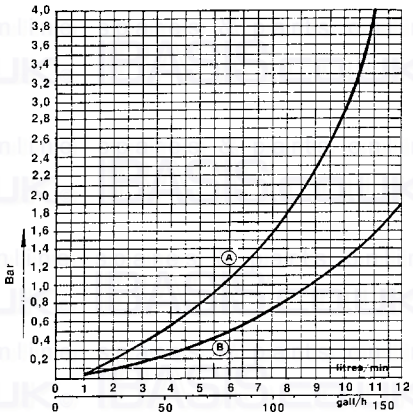

Fig. 1

Fig. 1 - D.H.W. Pressure Drop VS. flow
A = Standard with cold water Flow Restricter
B = Cold Water Flow Restricter Removed

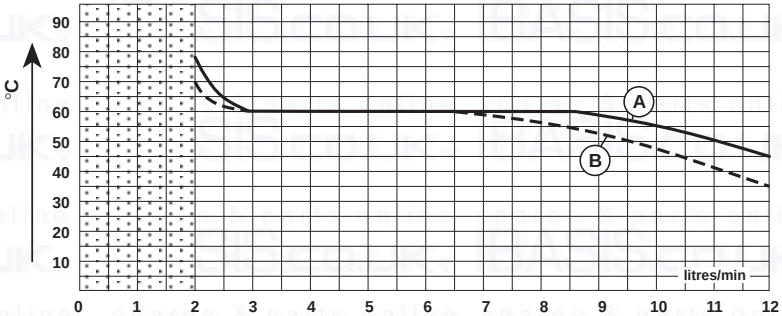

Fig. 2

Fig. 2 - D.H.W. temperature VS. flow
A = Cold Water 15°C
B = Cold Water 5°C

Modulating regulator (Modureg) of gas valve

1. Cap (with tube 71)
2. Shaft
3. Adjustment screw for max. pressure setting
4. Adjustment screw for min. pressure setting
5. 6,3 mm AMP terminals
6. «O» ring
71. Modulating balance tube

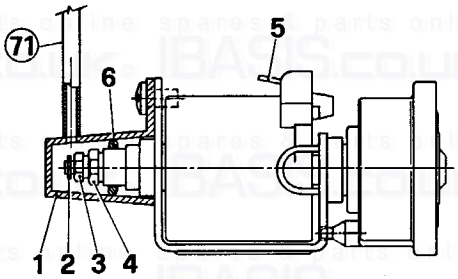

If necessary replace complete MODUREG

Pressure settings	Minimum mbar	Maximum mbar
Natural Gas	2.7	14.5

Special Installation Possibilities: Two-pipe air intake/flue outlet

Special Air Intake/Flue Outlet

The standard Flue/air intake hood on top of the boiler can be replaced by a special two pipe flue adapter.

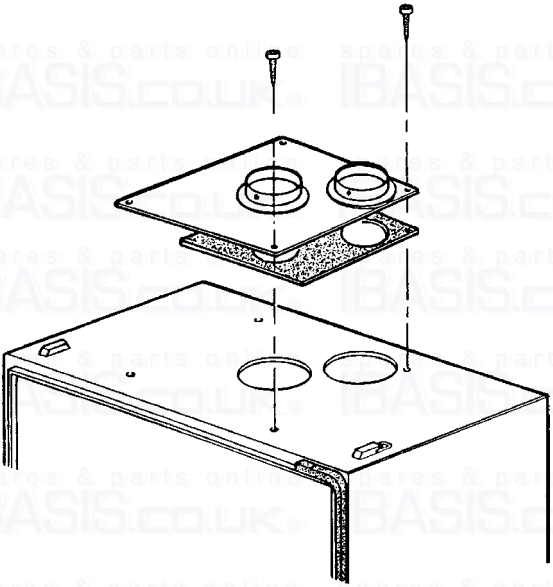

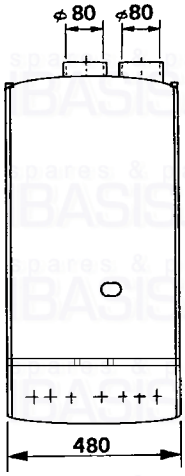

For details see separate instructions; «Optional flue systems»

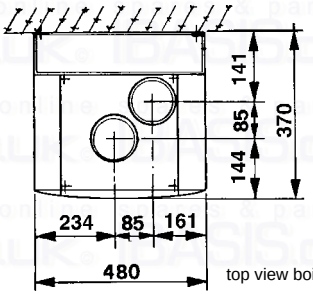

top view boiler

Phone numbers:

Installer _____

Service Engineer _____

Cod. 3540244/1 - 04/98

BECAUSE OF OUR CONSTANT ENDEAVOUR FOR IMPROVEMENT DETAILS MAY VARY SLIGHTLY FROM THOSE QUOTED IN THESE INSTRUCTIONS.

ALL SPECIFICATIONS SUBJECT TO CHANGE

Stockton Close, Minworth Industrial Park, Minworth, Sutton Coldfield, West Midlands B76 8DH
Tel.: 0121/3523500 - Fax 0121/3523510

spares & parts online IBASIS.CO.UK