OPTIMA 201

WALL MOUNTED, GAS COMBINATION BOILER

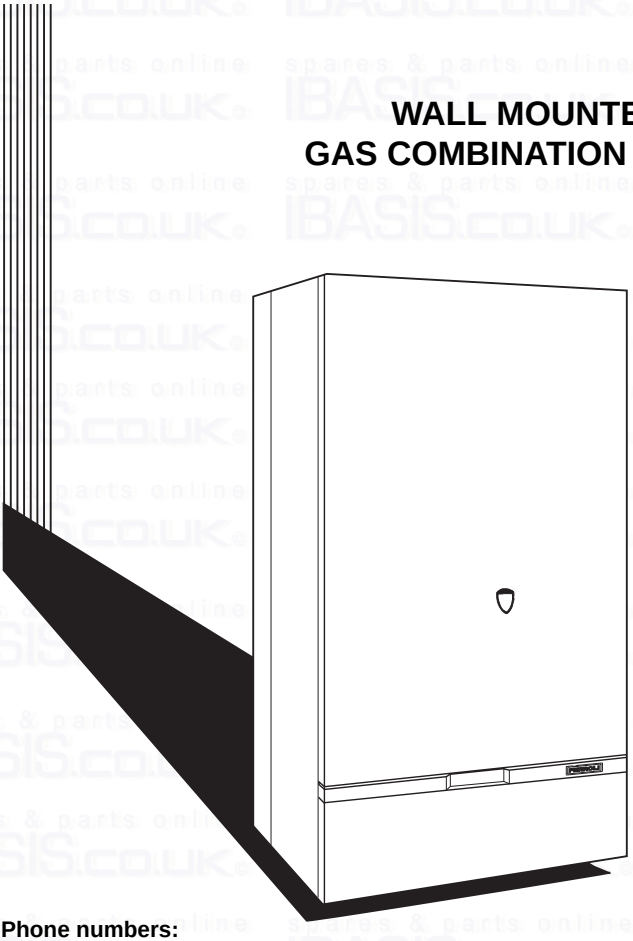

INSTALLATION INSTRUCTIONS

Appr. Nr. B94.05T CE 0063AQ2150

W.R.C. No. 9207075

LEAVE THESE INSTRUCTIONS ADJACENT TO THE GAS METER

Phone numbers:

Installer _____

Service Engineer _____

Serial No. _____

FERROLI HELPLINE

FOR SERVICE INFORMATION OR HELP TELEPHONE: 0121 313 1030
ALWAYS QUOTE YOUR SERIAL NUMBER FOR IMMEDIATE ASSISTANCE

ALL SPECIFICATIONS SUBJECT TO CHANGE

Stockton Close, Minworth Industrial Park, Minworth, Sutton Coldfield, West Midlands B76 8DH
Tel.: 0121/3523500 - Fax 0121/3523510

spares & parts online IBASIS.CO.UK

page	INDEX
3	General Description
3	Related Documents
4	Technical Data
5	Appliance Dimensions
6	Boiler Flow Diagram
8	Installation Details
8	1. Location of Boiler
8	2. Air Supply
8	3. Flue System
10	4. Gas Supply
11	5. Water System
12	Central Heating Pump
13	Sizing of expansion vessel
15	Installation of Boiler
15	1. Unpacking
15	2. Mounting the Boiler Jig on the Wall
16	3. Connecting the Boiler
17	4. Electrical Installation
18	Time clock
19	Removal of clock
20	5. Commissioning & Testing
20	5.1Filling the Central Heating System
20	5.2Filling the Domestic Hot Water System
20	5.3Electricity Supply
20	5.4The Gas Installation
21	5.5To Light the Boiler
22	5.6To Range Rate the Boiler C.H.
23	Gas pressure adjustment with Honeywell VR 4600 N 4002 valve
24	5.7D.H.W. Burner Pressure
24	6. System operation
24	7. Handing Over to the User
25	General Wiring Diagram
26	Electrical Functional Flow Wiring Diagram
27	Domestic Hot Water Performance + Modureg
28	Spare parts list

For "Fast" Fault Finding see separate instructions inside the electrical control box or page 59

General Description

The **Ferroli OPTIMA 201** is a wall mounted combination boiler for Central Heating (C.H.) and domestic Hot Water (D.H.W.).

The boiler is of light weight construction and the heat exchanger provides Central Heating and Domestic Hot Water from an integrally designed unit. The boiler contains its own expansion vessel for sealed systems. The wall mounting jig contains all the isolating cocks for the water and gas supplies which can be fitted to the wall and provided with all the necessary gas and water connections prior to the boiler being attached. The Central Heating and the Domestic Hot Water temperature is controlled by the Honeywell Modureg valve in conjunction with the P.C.B. There is a limit thermostat on the central heating circuit which operates at 88°C. There is also an overheat cut-off thermostat which will shut the boiler down completely and this thermostat operates at 100°C. The boiler is fited with its own Central Heating pump. The pump is switched ON/OFF by the time clock and/or a 24 Volt room thermostat. The pump circuit also has a 6 minute over-run time. There is a Domestic Hot Water flow switch fitted and when there is a demand for Domestic Hot Water (flow of more than 0.5 gallon/minute, 2.5 litre/minute) the Central Heating pump is switched off making available the maximum output of the gas burner for Domestic Hot Water. On the P.C.B. the maximum output for Central Heating can be set. This does not influence the maximum output for domestic hot water.
At the factory the central heating output is pre-set to maximum. The appliance is not suitable for external installation.

Related Documents

This appliance must be installed strictly in accordance with these instructions:

The Gas Safety Regulations (Installations & Use) 1994.

The Local Building Regulations.

The Building Regulations.

The Buildings Standards (Scotland - Consolidated) Regulations.

British Standards Codes of Practice:

B.S. 7593 1993 TREATMENT OF WATER IN DOMESTIC HOT WATER CENTRAL HEATING SYSTEMS
B.S. 5546 1990 INSTALLATION OF HOT WATER SUPPLIES FOR DOMESTIC PURPOSES
B.S. 5440 PART 1 FLUES
B.S. 5440 PART 2 AIR SUPPLY
B.S. 5449 1990 FORCED CIRCULATION HOT WATER SYSTEMS
B.S. 6798 1987 INSTALLATION OF GAS FIRED HOT WATER BOILERS
B.S. 6891 1989 GAS INSTALLATIONS
B.S. 7671 1992 IEE WIRING REGULATIONS
B.S. 4841 1990 SPECIFICATION FOR EXPANSION VESSALS

Model Water Bye Laws.

Technical Data

	G20	G31
Nominal Heat Input D.H.W. & C.H. (gross)	28.6 kW	28.0 kW
Minimum Heat Input D.H.W. & C.H. (gross)	12.8 kW	12.5 kW
Nominal Heat Input D.H.W. & C.H. (net)	25.8 kW	25.8 kW
Minimum Heat Input D.H.W. & C.H. (net)	11.5 kW	11.5 kW
Nominal Heat Output D.H.W. & C.H.	23.3 kW	23.3 kW
Minimum Heat Output D.H.W. & C.H.	9.7 kW	9.7 kW
(See section 8.6 for range setting of Central Heating - D.H.W. is preset and not adjustable)		
Maximum Gas Rate	2.72 m^3/h	2.66 m^3/h
Maximum Burner Pressure	14.5 mbar	36.0 mbar
Minimum Burner Pressure	2.7 mbar	7.9 mbar
Injector Marking (Main Burners)	210	
Injector Size (4 off)	2.10 mm	
Pilot Injector Marking	38/33A	
Dimensions (overall):		
Height	1020 mm	
Width	480 mm	
Depth	360 mm	
Weight (nett)	51 kg	
Weight (gross)	53 kg	
Electricity supply:	230 V ~ 50 Hz	
External fuse	3 A	
Internal fuses on P.C.B.	F2A to BS4265 - (2 Amp. Fast)	
Electrical Input	150 W	
Central Heating:		
Max. Flow Temperature	85°C	
Temperature Rise Across Boiler	20°C	
Domestic Hot Water Flow:		
30°C Rise	11.1 litres/min.	
32°C Rise	10.4 litres/min.	
35°C Rise	9.5 litres/min.	
40°C Rise	8.3 litres/min.	
Minimum Domestic Hot Water Flow	2.5 litres/min.	
Maximum Domestic Cold Water Inlet pressure	10 bar	
Minimum Heating Circuit Pressure	0.8 bar	
Maximum Heating Circuit Pressure	3.0 bar	
Boiler Water Capacity: Heating	2.0 litres	
Domestic Hot Water	0.5 litres	
Connections:		
Gas	22 mm	
Domestic Hot Water Outlet	15 mm	
Domestic Cold Water Inlet	15 mm	
Pressure Relief Valve Drain	15 mm	
Central Heating Flow	22 mm	
Central Heating Return	22 mm	
Minimum Installation Clearances:		
Sides -Left hand	5 mm*	
Right hand	5 mm*	
Front	50 mm**	
Minimum Clearance below	200 mm	
Minimum Clearance above	100 mm	

Notes:

*** If using a side outlet flue then the minimum clearance on the flue outlet side of the appliance must be increased to 75 mm (3 in).**

**** Access to the front of the boiler must be available for maintenance (min. 600 mm)**

Appliance Dimensions

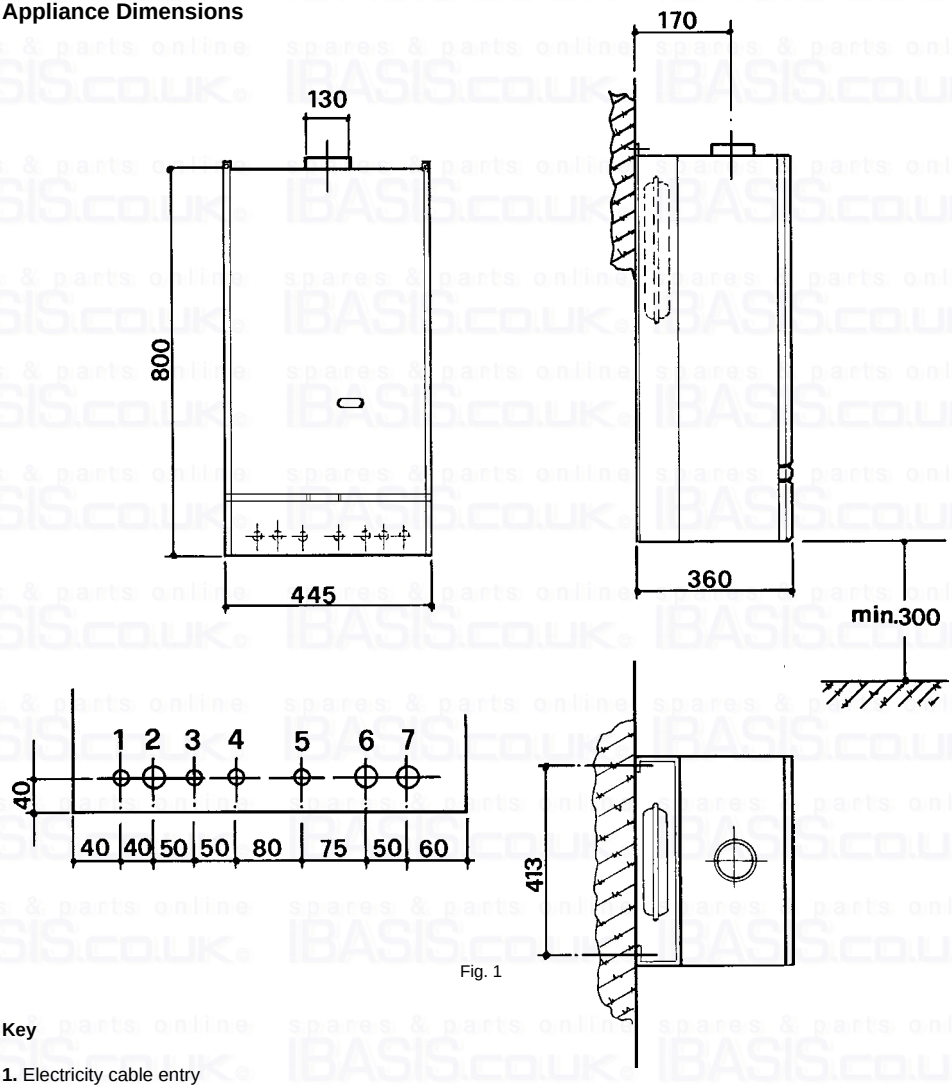

Fig. 1

Key

1. Electricity cable entry
2. Gas supply
3. Domestic Hot Water outlet
4. Domestic Cold Water inlet
5. Central Heating Pressure relief valve
6. Central Heating Flow outlet
7. Central Heating Return inlet

Boiler Flow Diagram

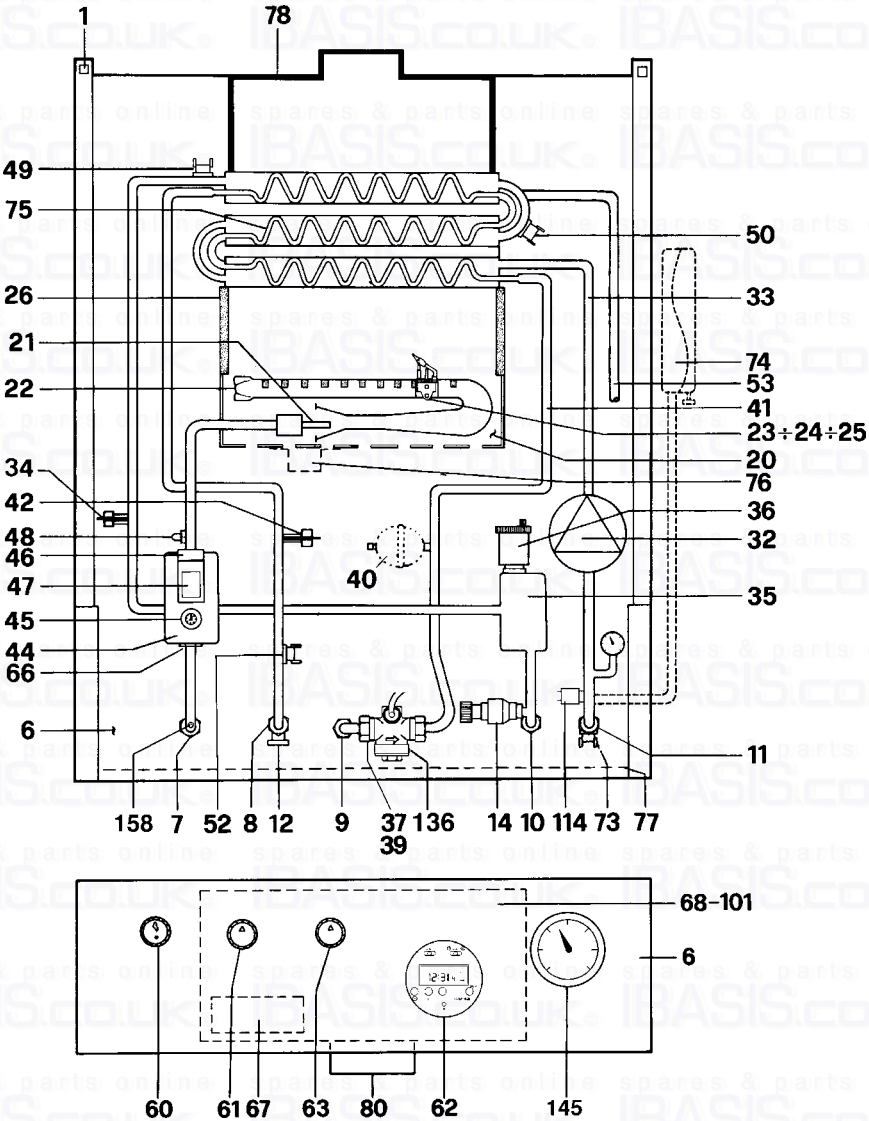

Fig. 2

Key

1. Fixing point
6. Control panel
7. Gas inlet
8. Domestic hot water outlet
9. Cold water inlet
10. Central heating flow outlet
11. Central heating return inlet
12. D.H.W. draining point
14. Central heating safety valve
20. Burner assembly
21. Main injector (4)
22. Burner (4)
23. Thermocouple
24. Spark electrode
25. Pilot
26. Combustion chamber insulation
32. Central heating pump
33. C.H. waterway of the heat exchanger
34. C.H. flow temperature sensor
35. Air separator
36. Automatic air vent
37. Cold water inlet filter
39. Cold water flow limiter
40. Domestic hot water expansion vessel (optional)
41. D.H.W. waterway of the heat exchanger
42. D.H.W. temperature sensor
44. Combination gas valve
45. Knob gas valve
46. Operator gas valve
47. Modulating regulator (Modureg) gas valve
48. Burner pressure test point
49. Overheat cut-off thermostat
50. Central heating limit thermostat
52. D.H.W. limit thermostat
53. Heat exchanger venting point
60. Extended control knob to gas valve
61. C.H. selector switch
62. Time clock
63. C.H. boiler thermostat
66. Microswitch combination gas valve
67. Ignition transformer
68. Control box with P.C.B.
72. Room thermostat (not fitted)
73. Frost thermostat (not fitted)
74. Expansion vessel
76. Air filter
80. 240 V + 24 V roomstat terminal blocks
101. P.C.B. (printed circuit board)
114. Water pressure switch
136. Flowmeter
145. C.H. pressure gauges
158. Gas inlet pressure test point

Gas Safety (Installation & Use) Regulations: 1994
In the interest of safety, it is the law that all gas appliances are installed by a competent person in accordance with the above Regulations, Building Regulations/Building Standards Scotland, Codes of Practice, current I.E.E. Regulations and the byelaws of the Local Water Undertaking. Failure to comply with the Regulations may lead to prosecution; it is in your interest and that of safety to ensure that the law is complied with.

Important - If the boiler is to be fitted in a timber framed buiding it should be fitted in accordance with the British Gas publication; Guide for Gas Installation in Timber Frame Housing: Reference DM2. If in doubt advice must be sought from the Local Gas Region of British Gas Plc.

Installation Details

Location of Boiler

The installation of the OPTIMA **201** must be on a suitable non-combustible load bearing wall which will provide an adequate fixing for the boiler mounting bracket assembly. A satisfactory flue with a minimum of 600 mm (2 ft.) rising vertically above the draught diverter must also be provided, terminating in a British Gas Approved cowl.
The location must also provide adequate room for servicing.

The location must also be provided with an adequate air supply for combustion purposes. The boiler must not be installed in a room containing a bath or shower, or in a bedroom or bed-sitting room. In installations of an unusual location, special procedures are necessary and BS 6798 gives detailed guidance on this aspect. The location should be as centralised as possible with the water piping system and in an area not subjected to frost conditions.

Flue system

Detailed recommendations for flue are given in BS 5440 Part. 1. The following notes are intended for general guidance. The cross sectional area of flue serving the boiler must not be less than the area of the flue outlet of the appliance.

The flue should terminate in accordance with BS 5440 Part 1. The boiler has a flue spigot designed for aluminium or stainless steel flue pipe. If double walled flue pipe is used, it should be of a type accepted by British Gas. Always use a split flue clip or flanged joint above the flue diverter to allow the removal of the boiler. A vertically rising flue above the diverter for a minimum length of 600 mm (2 ft.) is required before any bend is fitted, which should not be a 90° pattern. The flue pipe must be adequately supported and not be in contact with any inflammable material.

If any existing chimney is to be used, it should be lined with a stainless steel flexible liner or any other liner acceptable to British Gas. (Chimneys lined with salt glazed earthenware pipes are acceptable if the pipes conform to BS 65.). The number of metal flue liner joints should be kept to the minimum for connecting the boiler to an existing flue, the flue must be clean of any soot or loose material. Dampers must be removed. The flue should be, as far as is practical, vertically rising with the avoidance of horizontal runs. The metal flue pipe listed above should form the initial connection from the boiler to the existing chimney (and liner). Refer to page 12 if an extraction fan is fitted in the area.

Air supply

Detailed recommendations are given in BS 5440 Part. 2. The following notes are intended to give guidance.

Room or internal air space supply:

The OPTIMA **201** requires a permanent air vent for combustion air either from the room direct to outside air or to an adjacent room which must itself have a permanent air vent of the same size, direct to outside air. The minimum size of this air vent must be: 94 cm^2 free a (14 in^2). A proprietry air vent may be marked with its effective free area, if not, this infor-mation can usually be supplied by the maker. The vent should be designed to diffuse the air in windy conditions and should be sited to reduce room draughts, i.e. at top level. The aperture in the vent should not pass preferably, a 10 mm (318 in.) ball but allow the entry of a 5 mm (3116 in.) ball. (Additional gauzes or screens should not be used).

Existing air vents should be taken into account when assessing air vent requirements. An air vent in an internal wall should not communicate with a bedroom, toilet, bathroom or kitchen and should not be more than 450 mm (18 in.) above floor level in order to reduce the spread of smoke in the event of a fire. An air vent direct to outside air must not be loca-ted less than 600 mm (2 ft.) away from any part of an open flued terminal.

Cupboard or compartment air supply:

If the appliance is to be installed in a compartment or cupboard if existing, it should be of sufficient size. This compart-ment or cupboard must have permanent air vents for combustion air, flue dilution and cooling purpose!s, the vents being positioned at high and low level. The following minimum size of air vents (free area) are required:

Position of Air vent	Air from room or internal space	Air direct from outside
High	252 cm² (38 in²)	126 cm² (19 in²)
Low	504 cm² (76 in²)	252 cm² (38 in²)

NOTE

Both air vents must communicate with the same room or must be on the same outside wall to outside air. Where cupboard compartment air vents are open to a room, the room itself must have a permanent air vent(s) as previously specified.

IMPORTANT

If the boiler is installed in hair dressers premises, ventilation must not be from areas in which aerosol hair spray is being used. Any spray or materials emitting volatile vapours can be a source of ignition from the perrnanent pilot of the boiler. Propellants of aerosol srays and fumes of volatile compounds in addition to being highly flammable in many cases, will also change to corrosive hydrochloric acid when exposed to the products of combustion of the boiler. The results may be hazardous, causing service problems and produce failure.

Minimum clearances

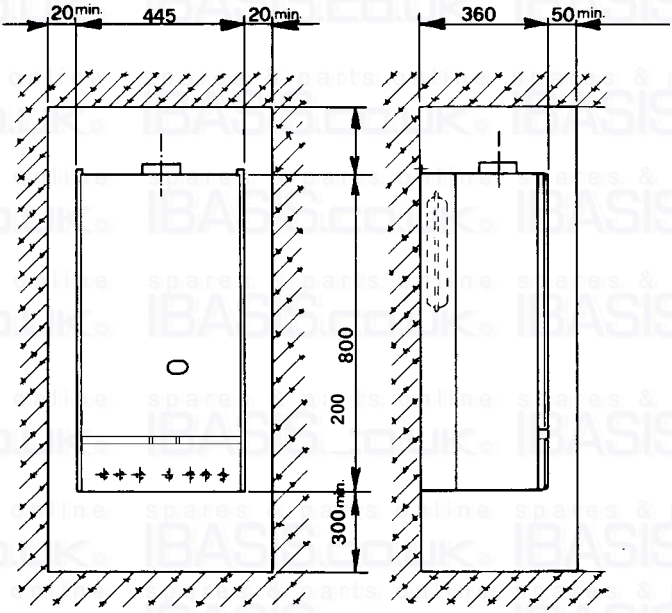

Fig. 3

Cupboard or compartment installation

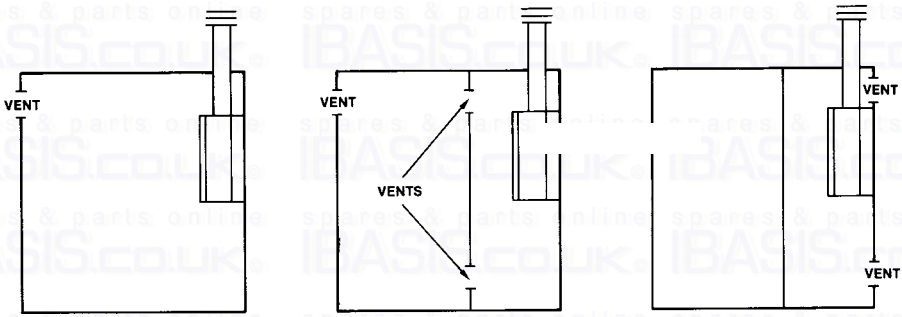

1. Boiler in a room

2. Boiler in a cupboard Vented to a room

3. Boiler in a cupboard Vented to outside

Fig. 4

Effect of an extract fan

If there is type of extract fan fitted in the premises, there is the possibility with open flued appliances, that if inadequate fresh air vents are not provided, spillage of products from the flue diverter could take place, when the fan is in operation. Where such installations are found, a test for spillage must be carried out as described in Part. 1 of BS 5440, and the necessary action taken.

Gas Supply

If necessary the local Gas Region should be consulted, at the installation planning stage, in order to establish the availability of an adequate supply of gas.

An existing service pipe must **not** be used without prior consultation with the Local Gas Region.

A gas meter can only be connected by the Local Gas Region, or by a Local Gas Region's Contractor.

Installation pipes should be fitted in accordance with BS6891-1988.

Pipework from the meter to the combination boiler must be of an adequate size.

The boiler requires 2.72 m^3/h of natural gas.

WE REQUIRE 22 mm PIPE FROM THE METER TO THE BOILER.

The complete installation must be tested for gas soundness and purged as described in BS6891-1988. All pipework must be adequately supported. An isolating gas valve is provided and should be fitted on manifold assembly.

Water System

Central Heating

It must be a sealed system. Detailed recommendations are given in BS6798, BS5449, BS6700 and CP342 Part. 2. Pipework not forming part of the useful heating surface should be insulated to prevent any heat losses or possible freezing (i.e. in roof spaces or ventilated underfloor spaces). Drain taps should be positioned at the lowest point of the system in accessible locations to permit the whole system to be drained down. The drain taps should be in accordance with BS2879. Copper tubing to BS2871, Part. 1 is recommended for water carrying pipework. Pipework in horizontal runs should have a gradient where possible to facilitate the removal of air. It should be ensured that the boiler heat exchanger is not a natural point for collecting air. A typical heating system with domestic hot water circuit is illustrated in fig. 5.

Important - A bypass must be fitted as far as possible from the boiler if thermostatic radiator valves are fitted throughout.

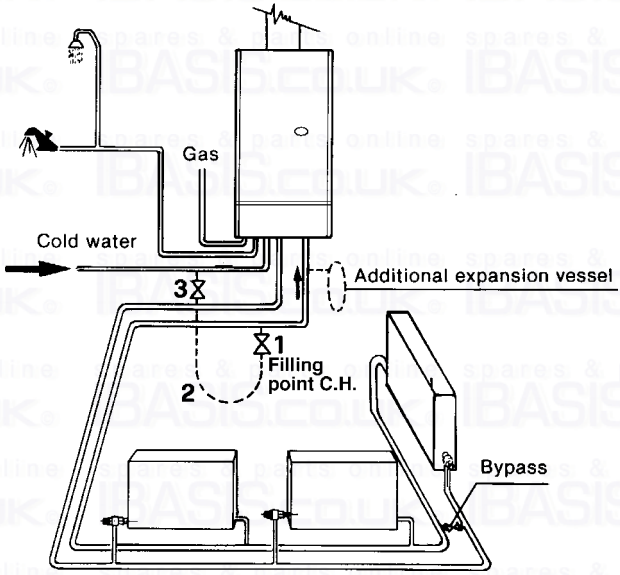

Key
1. Filling point C.H.
2. Temporary connection
3. Cold water supply

Fig. 6

Make up Water

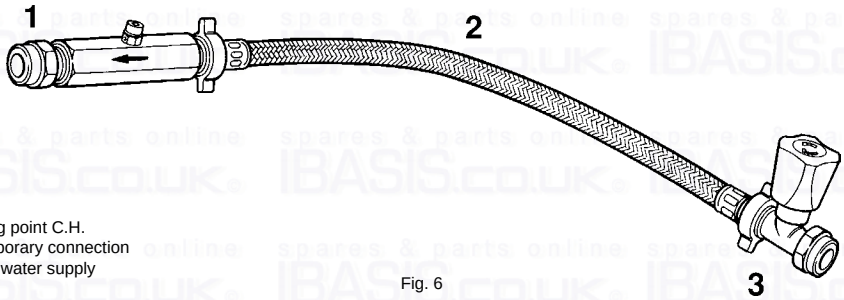

1. Filling point C.H.
2. Temporary connection
3. Cold water supply

Fig. 6

Provision must be made for replacing water lost from sealed system. Reference should be made to BS6798, for methods of filling and making up sealed systems. There must be no direct connection between the boiler's central heating system and the mains water supply. The use of mains water to charge and pressurise the system directly, is conditional upon the Local Water Byelaw. Again any such connection must be disconnected after use.

Domestic Hot Water

Always fit a water softener or descaler in «hard water areas». A 15 mm copper connection point on the boiler jig bracket for attaching to the main supply is provided. The maximum domestic water pressure for the inlet supply is 10 bar (145 P.S.I.). If the cold mains supply exceeds 5 bar, a water governor or pressure reducing valve must be fitted by the installer into the mains supply in an inconspicuous but accessible position.
Such a valve must be approved by the Water Research Council.

Attention - Is drawn to the Model Water Byelaws.

Fittings manufactured from duplex (alpha-beta) brass are not acceptable for underground use and certain water undertakers will not accept their use above ground.

Key

Built-in Central Heating Water Circulating Pump

The pump head available for circulating the water is given in fig. 7.

N.B. - The pump is factory set at position 3. The pump is a Grundfos type 15-50 UPS series.

Grunfos Pump performance graph

1 2 3 Speed settings
A Boiler pressure drop
B Max. available pump head C.H.

Note - Minimum flow through boiler heat exchanger at any time should not fall below 6 litres per minute.

If required an additional expansion vessel may be fitted to the central heating return inlet.

If the total volume of water in the system exceeds 40 litres an additional expansion vessel must be fitted to the central heating return inlet.

Pump performance curve Grundfos UPS 15-50

Installation of boiler

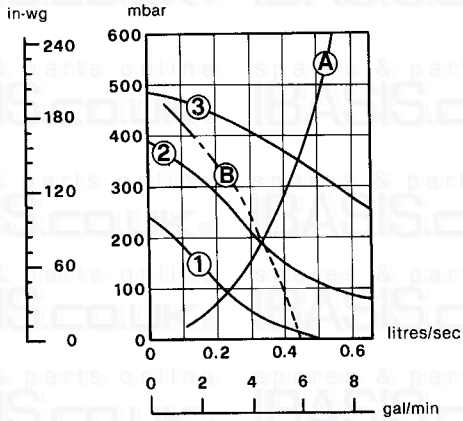

1 2 3 Speed settings
A Boiler pressure drop
B Max. available pump head C.H.

Fig. 7

SIZING OF ADDITIONAL EXPANSION VESSELS:

Deduct from the value given in the table the 7 litre vessel supplied.

SAFETY VALVE SETTING (bar)	3.0					
VESSEL CHARGE PRESSURE (bar)	0.5			1.0		1.5
INITIAL SYSTEM PRESSURE (bar)	1.0	1.5	2.0	1.5	2.0	2.0
TOTAL WATER CONTENT of SYSTEM	EXPANSION VESSEL VOLUME (litres)					
LITRES						
25	3.5	6.5	13.7	4.7	10.3	8.3
50	7.0	12.9	27.5	9.5	20.6	16.5
75	10.5	19.4	41.3	14.2	30.9	24.8
100	14.0	25.9	55.1	19.0	41.2	33.1
125	17.5	32.4	68.9	23.7	51.5	41.3
150	21.0	38.8	82.6	28.5	61.8	49.6
175	24.5	45.3	96.4	33.2	72.1	57.9
200	28.0	51.8	110.2	38.0	82.4	66.2
For syst. volumes other than those given above, mult. the syst. volume by the factor across	0.140	0.259	0.551	0.190	0.412	0.33

Note

1. Fill C.H. installation to min. 1.5 bar.
2. Select by preference the expansion vessel for increased system pressure of 2.0 bar
3. Expansion vessel must be fitted to Central Heating Return Inlet
4. The standard 7 litres expansion vessel is charged to 1 bar

Fig. 8

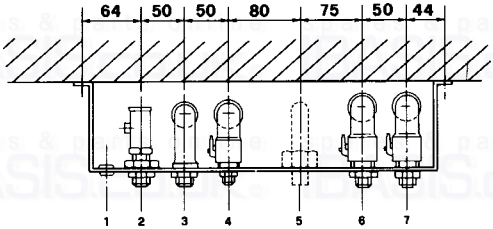

1 = Electrical cable entry
2 = Gas supply
3 = Domestic Hot Water outlet
4 = Domestic Cold Water Inlet
5 = Outlet Central Heating safety valve
6 = Central Heating flow outlet
7 = Central Heating return inlet

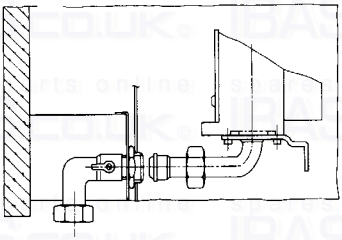

2 Gas

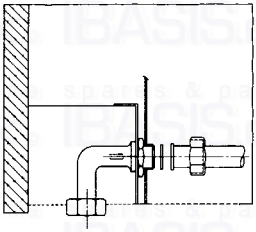

3 Domestic hot Water outlet 15 mm

22 mm gas supply must be within 3 m of boiler. Final connetion only in 15 mm.

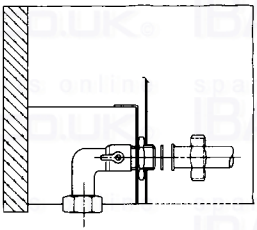

4 Domestic cold Water inlet 15 mm
6 Central Heating flow outlet 22 mm
7 Central Heating return inlet 22 mm

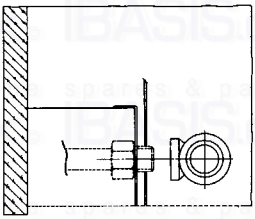

5 Outlet central heating safety valve 15 mm

Fig. 9

Important Note - Always use two spanners to prevent twisting of soft copper pipework.

Note - The central heating safety valve (5) should be piped 15 mm to discharge safely outside the property.

Note - To mount the boiler on the wall, a two person lift will be needed.

1.0 UNPACKING

The appliance is delivered in two cartons.

1.1 The large carton contains the boiler, and the Installation/Servicing and Users Instruction.

1.2 One carton contains the mounting jig assembly, complete with isolating valves, the assembly fixing screws and wall plugs (x4), the boiler mounting nuts and washers (x2) and drilling template.

When the cartons are unpacked examine for any signs of damage in transit.
All protective plastic should be left in place until installation is complete.

2.0 FIXING THE MOUNTING JIG ON THE WALL

2.1 Select the boiler location carefully ensuring that alla requirements given in previous text are satisfied. Fig. 3 will also give guidance to fixing dimensions.

2.2 Locate template on wall, mark the positions of the four jig bracket fixing holes.

2.3 Using a 10 mm drill, drill 70 mm deep holes to accept the wall plugs, and insert wall plugs.

2.4 Fit the mounting jig assembly using the four fixing screws provided (Ensure that all the service cocks are in the OFF position).

2.5 With the exception of the connection to the pressure relief valve, make all the water and gas connections to the jig bracket valves. Fully tighten (fig. 9). Before the gas inlet to the boiler there must be at least 100 mm of straight before any bends, to allow access to the union nut.

Important Note - Always use two spanners to prevent twisting of soft copper pipework on the boiler.

Flush out the water system.

Note - The maximum inlet cold water pressure must not exceed 10 bar (145 P.S.I.) and a water governor or a pressure reducing valve will be required if the pressure is in excess of 5 bar (72 P.S.I.).

Ensure all pipework is adequately supported.

5.0 CONNECTING THE BOILER

5.1 Place the boiler on its back.

5.2 Remove the boiler base plate, four screws (fig. 11). Remove the plugs fitted to the boiler water connections.
Remove the bag of sealing washers from the boiler pipework. Remove the front panel by gripping on both sides and pulling away from the main boiler.

5.3 Lift boiler as shown in fig. 10 onto the top studs and fit supplied nuts and washers hand tight.

5.4 Lift at bottom to engage the water and gas connections. Tighten central heating flow and return, and the domestic hot water inlet and outlet, using appropriate sealing washers. Tighten the gas union.

5.5 Connect the pressure relief valve discharge pipe (15 mm) to the outside of the building, where possible over a drain. The discharge must be such that it will not be hazardous to occupants or passers-by or cause damage to external electric components or wiring. The pipe should be directed towards the wall.

It must not discharge above an entrance or window, or any type of public access. The installer must consider that the overflow could discharge boiling water.

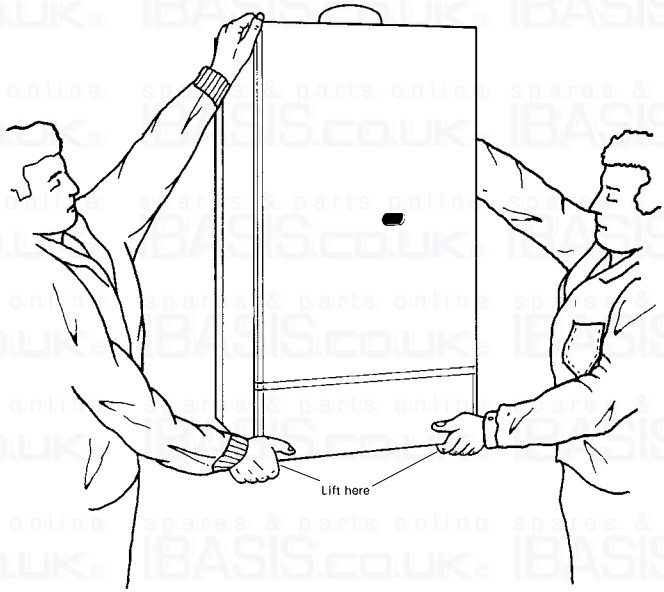

Fig. 10

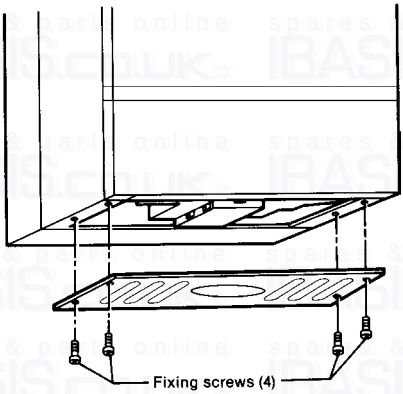

Fig. 11

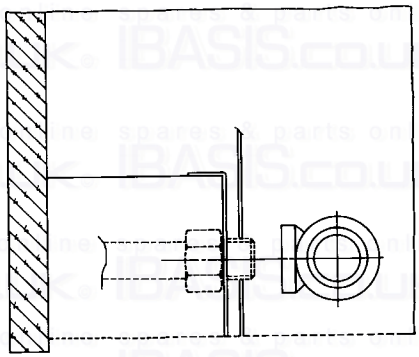

Fig. 12

4.0 ELECTRICAL INSTALLATION

Electrical installation must be carried out by a competent electrician. The appliance is to be connected to a 240 V ~ 50 Hz supply (see fig. 13). The supply fuse rating is 3A. The terminals are accessible after removing the boiler base plate and single screw securing the terminal cover (see fig. 13).

External controls: room stat or remote time clock in the place of loop terminals 4 and 5. Please note 24 V only.

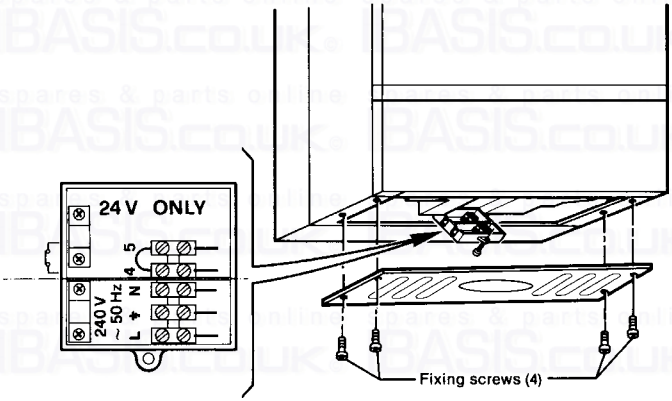

Fig. 13

Time Clock

A 24 hour time clock is fitted to the boiler to control the central heating, this will come into operation when the selector switch is turned to the position marked “heating timed and hot water”.

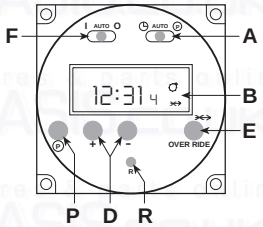

A Slide switch: set clock - auto - set programme
B Display. Symbol ♂ in Display = Timer ON
P Select programme ON/OFF 1.....8
D Push buttons Time + Time –
E Override: Boiler will switch ON if boiler is OFF; and OFF if is ON
F I=Heating continuous - AUTO=Heating timed - O=Heating disabled
R Reset (with pencil) only with switch **A** in set clock position

To set time of day

1. Slide switch (**A**) to left position
2. Using button + and – adjust until the correct time is shown on display (**B**).

Pre Set Programmes. The timer is pre programmed with 3 ON and 3 OFF times.

6:30 - 8:30
12:00 - 12:00
16:30 : 23:30

If these are suitable no programming is required and the slide switch (**A**) can be moved to the Auto position and the central heating will be ON for these periods. (12:00 - 12:00 will not switch on the boiler)

To Set Own ON and OFF times. Symbol ♂ in Display = ON time

1. Slide switch (**A**) to right position (**P**)

Display 6:30 1 ♂

2. Press button (**P**)

Display 8:30 2

3. Press button (**P**)

Display 12:00 3 ♂

4. Press button (**P**)

Display 12:00 4

5. Press button (**P**)

Display 16:30 5 ♂

6. Press button (**P**)

Display 22:30 6

7. The timer can be programmed with up to 8 ON and 8 OFF times by repeating the above procedure.

1.1 Use buttons + and - to set 1st ON time eg. 6:00

Display 6:00 1 ♂

2.1 Use buttons + and - to set OFF time, eg. 9:00

Display 9:00 2

3.1 Use button + and - to set 2nd ON time, eg. 12:30

Display 12:30 3 ♂

4.1 Use button + and - to set 2nd OFF time eg. 14:00

Display 14:00 4

5.1 Use button + and - to set 3rd ON time, eg. 16:00

Display 16:00 5 ♂

6.1 Use button + and - to set 3rd OFF time eg. 23:30

Display 23:30 6

8. On completion of programming slide switch (**A**) to Auto position, the time of day will be displayed and the central heating will switch ON and OFF according to the programme set.

Over ride

By pressing the over ride button (**E**) the timer programme is over ridden ie, if programme is in OFF time it will come ON and if in ON time will go OFF.

The timer will revert back to it set programme on reaching the next ON or OFF time.

When the programme is on over ride the sign ⤫ will be shown in the display window (**B**).

Reset Button

By the use of a pencil the reset button can be pushed (**R**). This will clear all programmes apart from those factory pre set.

Reset is only possible with switch (A) in set Clock position!

12.0 REMOVAL OF THE CLOCK

a) Refer to section 1, items a, c, d, f and j.
b) Disconnect the electrical connections to the time clock.
c) Remove the time clock from the control panel (fig. 43).
d) Re-assemble in reverse order (refer to fig. 43 for replacement of the time clock).

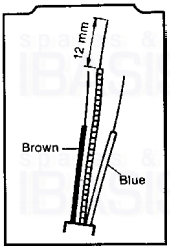

Fig. 14

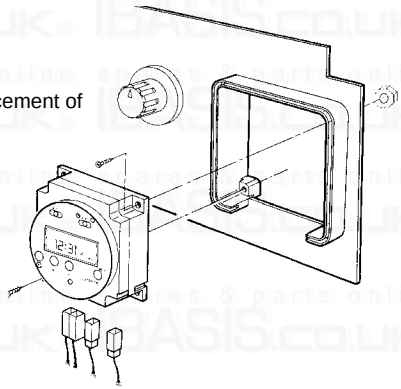

4.1 **Procedure**

4.1.1 The supply cable must not be no less than 0.75 mm (24x0.2 mm) to BS6500 table 16.

4.1.2 The earth conductor must be cut longer than the live and neutral (fig. 14).
Connect the Supply Cable to the terminal block marked 240 V ~ 50 Hz, L, N, the supply cable is to be connected as follows:

i) Connect the brown wire to the L (live) terminal).
ii) The blue wire to the N (neutral) terminal.
iii) The green/yellow wire to the (earth) terminal.

4.1.3 Secure the cable with the cable clamp.
The supply cable can be connect to the mains supply by the use of an unswitched shuttered socket-outlet in conjunction with the 3A fused 3 pin plug both in accordance with BS 1363. This provides complete isolation.
Alternatively, a fused double pole switch having a contact separation of at least 3 mm, in all poles and provided just for the boiler and its external controls can be used.
A wiring diagram is provided on the appliance, attached to the rear of the front panel. In addition, there is one in this manual (fig. 20b).
Attention is drawn to the requirements of the current I.E.E. Regulation and in Scotland, the electrical provisions of the Building regulations.

4.2 **Room Thermostat** (fig. 18) (or remote time clock connection)

4.2.1 Please note that the room thermostat, clock switch connection is 24 V.
To connect mains voltage to these terminals will seriously damage the printed circuit board.
The room thermostat and clock switch connector block is situated within the connector box. Twin core cable should be used for this connection (terminals 4 and 5).

4.2.2 If using a remote 240 Volt time clock ensure that the motor and switch connections are totally separate in the clock and that the switch connections are independent for the 24 Volt terminals (4 and 5) on the boiler.

8.0 COMMISSIONING AND TESTING

8.1 Filling the Central Heating System

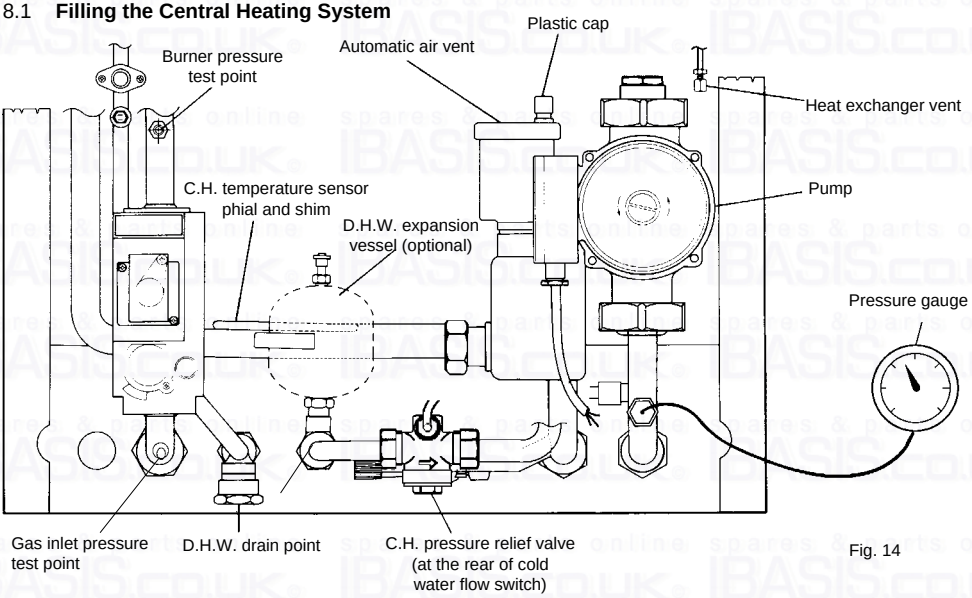

Fig. 14

Remove the top front panel by gripping both sides and pulling forward away from main boiler assembly.
Loosen the cap of the automatic air vent (fig. 15) and leave it loose.
Open the central heating flow and return cocks (fig. 9).
Gradually fill the system as detailed in Make up Water.
While filling, vent the heat exchanger at venting point by loosening cap (fig. 15) on the right hand side and vent each radiator. Tighten cap on heat exchanger air vent, but be sure to leave loose the plastic cap on the automatic air vent.
Ensure the working pressure, when filled, is between 1 an 1.5 bar on the pressure gauge (see technical data).
Check the system for leaks.
Flush system in accordance with B.S. 7593.

8.2 Filling the Domestic Hot Water System

Close all hot water draw off points. Open main cold water stop cock and ensure the cold water inlet cock is open at the boiler jig bracket (fig. 9). Slowly open each hot tap in turn until clean water, free from air pockets, is seen.
Check system for leaks.

8.3 Electricity Supply

Carry out preliminary checks (i.e. earth continuity, polarily short circuit and resistance to earth using a suitable multimeter).

8.4 The Gas Installation

The whole of the gas installation including the meter, should be inspected and tested for soundness, and purged in accordance with the recommendations of BS6891-1988.

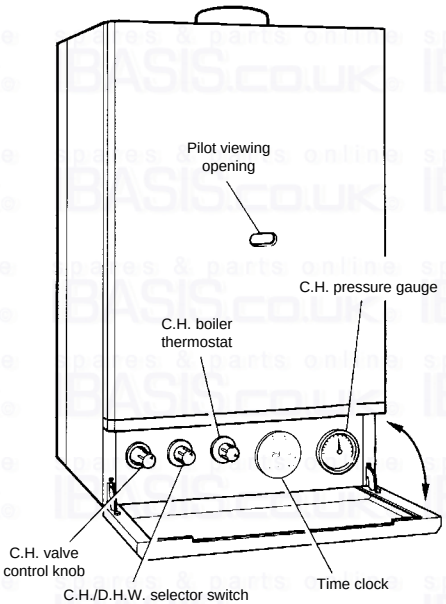

Fig. 16

Important note -
If the burner stops for C.H. only after a waiting time of 3 minutes the boiler will light again!

5.5 **To Light the Boiler** (fig. 16)

1. Open controls panel door by pulling at either side.
2. Ensure that the C.H./D.H.W. selector switch is set for heating continuous and Hot Water.
3. Ensure that the electricity supply is turned on.
4. Ensure that the heating system is filled with water and has not been drained down. (pressure gauge should read 1.0 bar minimum).
5. Adjust room thermostat (if fitted) to a high setting.
6. Adjust the boiler thermostat to its maximum setting, wait 3 minutes before continuing.
7. Depress the gas control knob fully (this should operate the electronic ignitor). When the pilot flame is seen to light through the pilot viewing window, keep the control knob fully depressed for a further 15 seconds, then release.

   Should the pilot fail to remain alight (or go out for any reason), then wait a full 3 minutes before attempting to relight the pilot. Should the pilot still fail to remain alight, turn the boiler off and contact your installer.
8. With the pilot burner established, observe that the main burners cross-light smoothly.
9. Set the time clock, room thermostat (if fitted) and the boiler thermostat to their desired settings.

Note 1 - The main burner will light whenever a hot tap is turned on.

Note 2 - If the electricity supply is switched off for any reason, ensure that the pilot burner has remained alight. if the boiler has gone out, follow "The boiler lighting instructions" for relighting it.

5.6 **To Range Rate the Boiler C.H. (not required on standard installation)**

The boiler can be range rated for an output up to 23.3 kW. When the boiler is supplied it is factory set at an output 23,3 kW.

Procedure

a. Release the control panel fixing screws (fig. 23) and lower panel.
b. Loosen the screw in the burner pressure test point (fig. 17) and attach a gauge.
c. Ensure C.H./D.H.W. selector switch is set for heating continuous and hot water.
d. Adjust room thermostat to maximum (if fitted).
e. Turn boiler thermostat to maximum.

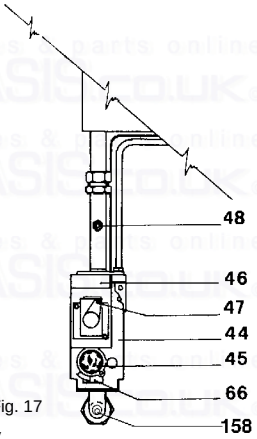

Fig. 17

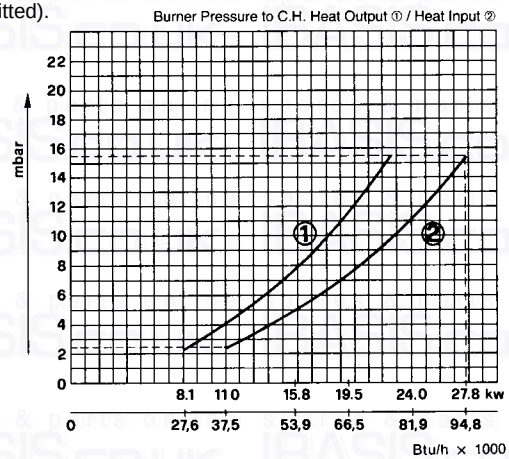

Fig. 18

P1 = C.H. range rating to be set on site
P2 = D.H.W. temperature (factory set, not to be adjusted)
P1 Adjust with screwdriver!

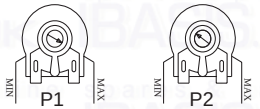

Fig. 19

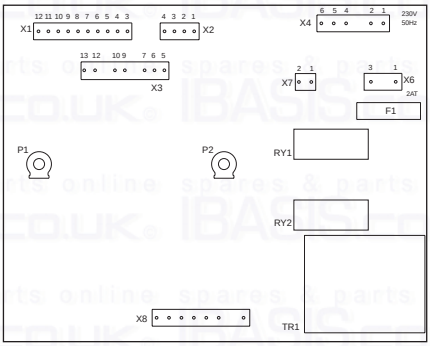

Key

44 Combination gas valve
45 Knob gas valve
46 operator gas valve
47 Modulating regulator (Modureg) gas valve
48 Burner pressure test point
66 Microswitch
158 Gas inlet pressure test point

Note 1 - Modulation is available on central heating, so the procedures must be carried out while the system is relatively cold. Recheck boiler thermostat is set to maximum.

d. Adjust the potentiometer P1 on the PCB (fig. 19) in the control panel until the required burner pressure is obtained (Anticlockwise to reduce the pressure).

Note 2 - The range of inputs with corresponding burner pressure is given on the Data badge which is situated behind the top front panel. Further informations is on (fig. 18).

e. With the pressure set, turn off the electrical supply and mark the set input on the Data badge (with sticker supplied).

Burner Pressure C.H. and D.H.W.

Honeywell VR 4600 N 4002 valve
with V7335A4014 Modureg

Gas pressure Adjustment

1 - **With the burner lit:**
2 - Connect suitable pressure gauge to burner test point "B", and then:
3 - Disconnect the wires from coil **"C"** of the Modureg;
4 - Remove protective cover **"D"**;
5 - Remove coil **"C"** by opening the coupling spring **"I"**;
6 - Screw the minimum adjustment screw **"E"** up tightly. (clockwise)
7 - Unscrew lock nut **"F"** on sleeve **"G"**;
8 - Adjust maximum pressure by rotating sleeve **"G"** clockwise to increase pressure and anticlockwise to reduce pressure;
9 - Tighten sleeve lock but **"F"** then check that the pressure is still at the required value;
10 - Adjust minimum pressure by rotating screw **"E"** anticlockwise until the required value is reached;
11 - Fit coil **"C"** by sliding it into the sleeve, pushing and rotating it lightly until the coupling spring **"I"** clicks into place;
12 - Shut down and ignite the burner, checking that the minimum pressure value is stable;
13 - Reconnect the wires to coil **"C"** of the Modureg;
14 - Replace protective cover **"D"**;
15 - Turn burner off, remove pressure gauge, close and test, test point;

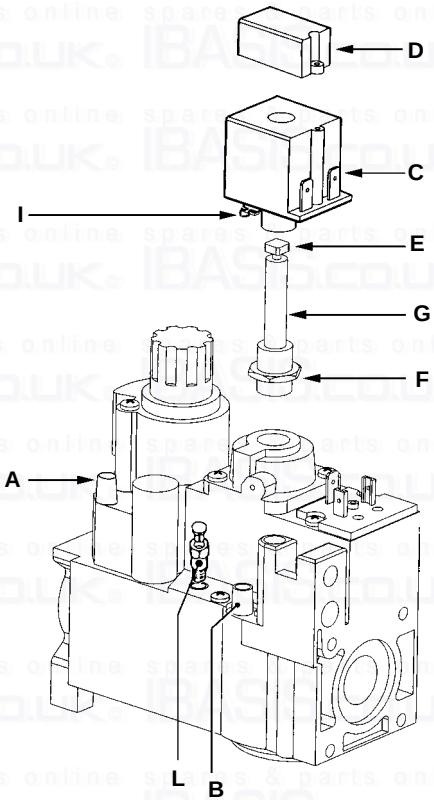

Key
A - Test point inlet pressure
B - Burner test point
C - Coil
D - Protective cover
E - Minimum adjustment screw
F - Lock nut
G - Sleeve
I - Coupling spring
L - Adapter (for only G.L.P. version)

f. Switch on the electricity supply to relight the main burner.

5.7 D.H.W. Burner Pressure

The domestic hot water burner pressure in not range rateable and not adjustable but the maximum and minimum burner pressure should be checked as follows:

a. Check electricity supply is still off.
b. Open a D.H.W. tap at high flow until the water runs cool and leave running.
c. Switch on the electricity supply.
d. The pressure should be 14.5 mbar -/+ 0.5 mbar.
e. Disconnect one of the wires from the «Modureg» (fig. 17), this will reduce the burner to minimum which should read 2.7 mbar +/- 0.5 mbar. If the burner pressure is not as stated check the inlet working pressure (fig. 17) which should be minimum 20 mbar. If that is correct, consult Ferroli SERVICE DEPARTMENT. No attempt should be made to alter D.H.W. burner pressure.
f. Switch off electrical supply and close hot tap.
g. Reconnect the wire to the «Modureg». Remove pressure gauge, tighten the test screws.
h. Replace control panel (2 screws).
i. Turn on electricity supply, open a hot tap to full flow and when the burner lights, test for gas soundness with a leak detection fluid around the gas valve and connections indluding the pressure test point screws.

Note - The cutting of the electricity supply may result in the pilot being extinguished - re-light if need be, after waiting three minutes at least.

6.0 SYSTEM OPERATION

Let the boiler operate normally on central heating for about 30 minutes.

I) Vent radiators.
II) Vent heat exchanger.
III) Examine all pipework for leakage.
IV) Turn on a D.H.W. tap and check that the C.H. pump stops running.
V) As the D.H.W. temperature reaches 60°C check the burner for modulation.
VI) Carry out a spillage test in accordance with BS5440 Part 1.

Turn the gas valve «off», (twist the plastic knob 1/12th turn clockwise and release), and isolate electricity supply.

Drain down the central heating system fully, when hot to flush out flux, etc. Refill the system as previously instructed. Repeat the venting. Examine the system's water pressure and topo up as necessary.

Replace the casing front panel and close the control panel cover.

7.0 HANDING OVER TO THE USER

After completion of installation and commissioning of the system:

a. Hand over the User's Instructions' to the Householder and explain His/Her responsability under the Gas safety (Installation and Use) Regulations 1984.
b. Explain and demonstrate the lighting and shutting down procedure.
c. Explain the operation of the boiler including the use and adjustment of ALL system controls.
Advise the User of the precautions necessary to prevent damage to the system and to the building, in the event of the system remaining inoperative during frost conditions.
d. Stress the importance of regular servicing by a qualified Heating Engineer and that a comprehensive service should be carried out at LEAST ONCE A YEAR.

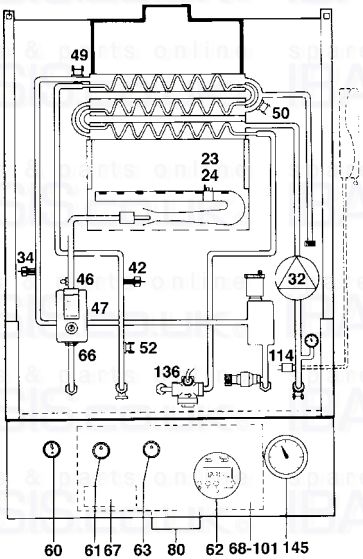

Key

23 Thermocouple
24 spark electrode
32 Central heating pump
34 C.H. flow temperature sensor
42 D.H.W. temperature sensor
46 Operator gas valve
47 Modulating regulator (Modureg) gas valve
49 Overheat cut-off thermostat
50 Heat exchan. limit thermostat
52 D.H.W. limit thermostat
60. Extended control kob to gas valve
61 C.H. selector switch
62 Time clock
63 C.H. boiler thermostat
66 Microswitch combination gas valve
67 Ignition transformer
68. Control box with P.C.B.
72 Room thermostat (not fitted)
80 240V + 24V roomstat terminal blocks
101 P.C.B.
114 Water pressure switch
136 Flowmeter
145 C.H. pressure switch

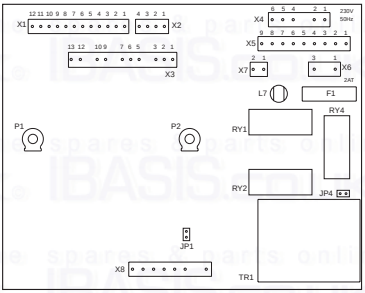

P1 = C.H. max. output (to be set on site)
P2 = D.H.W. temperature (factory set)

J1 Jumper links on P.C.B.
JP1 Must is not required

61. C.H. selector switch
Heating timed and hot water

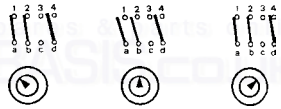

Hot water only | continuous and Heating | hot water

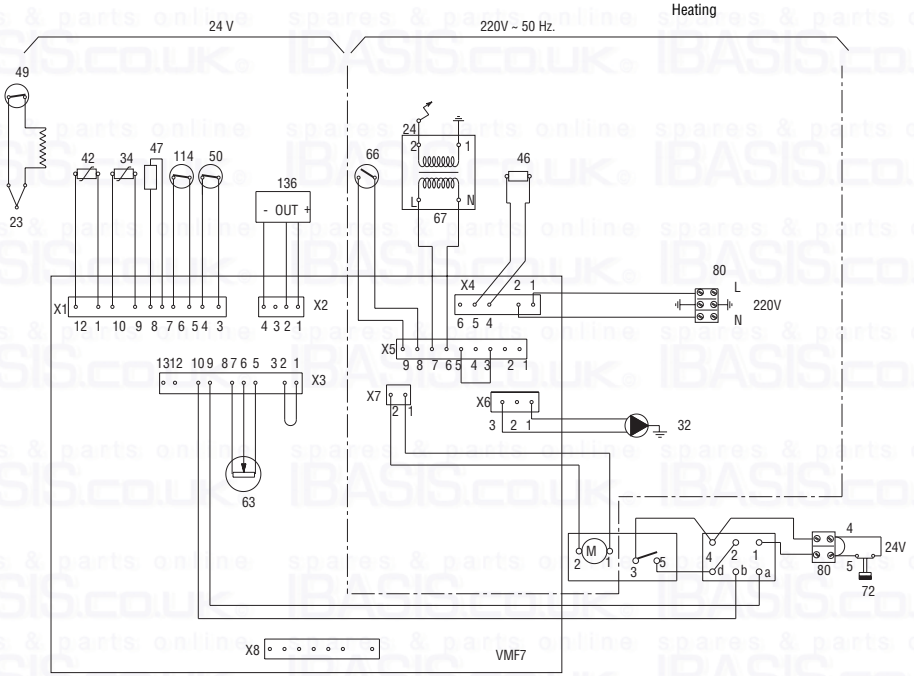

OPTIMA 201

FERROLI

General Notes - For use on the OPTIMA 201 fitted with VMF7 Printed Circuit Board

*The central heating pump (32) will run to disperse heat if the temperature at the heat exchanger limit thermostat (50) is too high

RL not energised

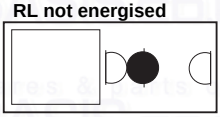

RL energised

LED n°	colour	signification:
1	green	Mains on/low voltage on
2	yellow	Domestic hot water flow switch (38) on
3	yellow	Central heating room thermostat (72) / clock (62) calling for heat
4	green	Sensor (34) or (42) calling for heat
5	red	Central Heating waiting time, a max. 3 minutes delay following
		shut off Boilerstat (63), Clock (62), Roomstat (72) or use of Hot Water
6	yellow	Demand for heat. Relays RL2/RLX energised.
7	green	Demand for heat
8	yellow	Gas valve (46) energised

Jumpers J1 - J2

	Fitted	Not fitted
J1	Prepurge time before ignition = 0 second	Prepurge time before ignition = 20 second

J1 should be fitted

REsistance of Central Heating or Hot Water sensors (34) + (42)

10° C	890 ohm
25° C	1000 ohm
60° C	1300 ohm

RELAYS

RL1 central heating pump
RL2
RL3 ignition

NOTE

If RL1 is not energised the Central Heating pump will run

Check operation using LED's as a fault finding guide. First check section A, then B, then C, then D.
0 = LED off 1 = LED on x = LED either on/off is not important

A — Domestic Hot water tap open (Flow rate greater than 2,5 l/min)

LED	OK	FAULT	POSSIBLE CAUSE OF FAULT
1	1	0	No mains electricity/switches off/fuse blown.
2	1	0	D.H.W. flow switch (38) not operating.
3	X	X	Not required for D.H.W.
4	1	0	- D.H.W. sensor (42) not connected or D.H.W. temperature too high
5	0	1	- Waiting time operating: replace P.C.B.
6	1	0	Short circuit on D.H.W. sensor (42) or resistance lower than 500 Ohm

B — CENTRAL HEATING ON Room stat (72) at Max, HW tap closed

LED	OK	FAULT	POSSIBLE CAUSE OF FAULT
1	1	0	No main electricity/switches off, fuse blown.
2	0	1	Hot water tap open - D.H.W. flow switch (38) contact closed
3	1	0	Roomstat (72) or clock (62) not calling for heat
4	1	0	- Central heating sensor (34) not connected or
			- boiler temperature too high or
			- boiler thermostat (63) below CH temperature
5	0	1	Waiting time still operating (max. 3 minutes)
6	1	0	- C.H. sensor (34) short circuit or resistance lower than 500 ohm

C — GENERAL TEST FOR D.H.W. AND CENTRAL HEATING (First check A and B above)

	OK	FAULT	POSSIBLE CAUSE OF FAULT
RL2/RLX	energised	not energised	Wiring defect: check wiring on (66-67-68)
LED 7	1	0	Wiring defect: check wiring on (66-67-68)
LED 8	1	0	- CH limit thermostat (50) open circuit (pump will run) - DHW limit thermostat (52) open circuit

D — IGNITION OF PILOT

1	Check first A, B and C above
2	Check if Jumper J1 is fitted
3	Push ignition button (60) fully in
4	Microwitch (66) will close
5	Relay RL3 will energise
6	Ignition transformer (67) will energise
7	Check spark and position of spark electrode (24)

Domestic Hot Water Performance

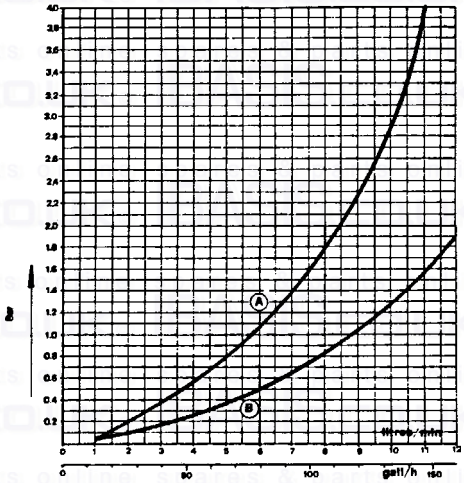

Fig. 1

Fig. 1 - D.H.W. Pressure Drop VS. flow
A = Standard with col water Flow Restricter
B = Cold Water Flow Restricter Removed

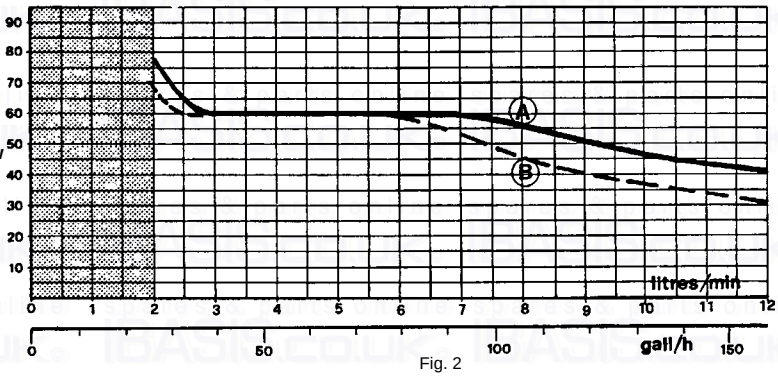

Fig. 2

Fig. 2 - D.H.W. temperature VS. flow
A = Cold Water 15°C
B = Cold Water 5°C

Modulating regulator (Modureg) of gas valve

1. Cap (with tube 71)
2. Shaft
3. Adjustment screw for max. pressure setting
4. Adjustment screw for min. pressure setting
5. 6,3 mm APM terminals
6. «O» ring

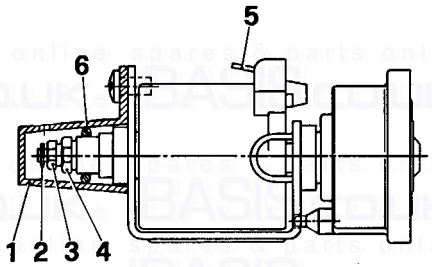

If necessary replace complete MODUREG

Pressure settings	Minimum mbar	Maximum mbar
Natural Gas	2.7	14.5
L.P.G.	7.9	36.0

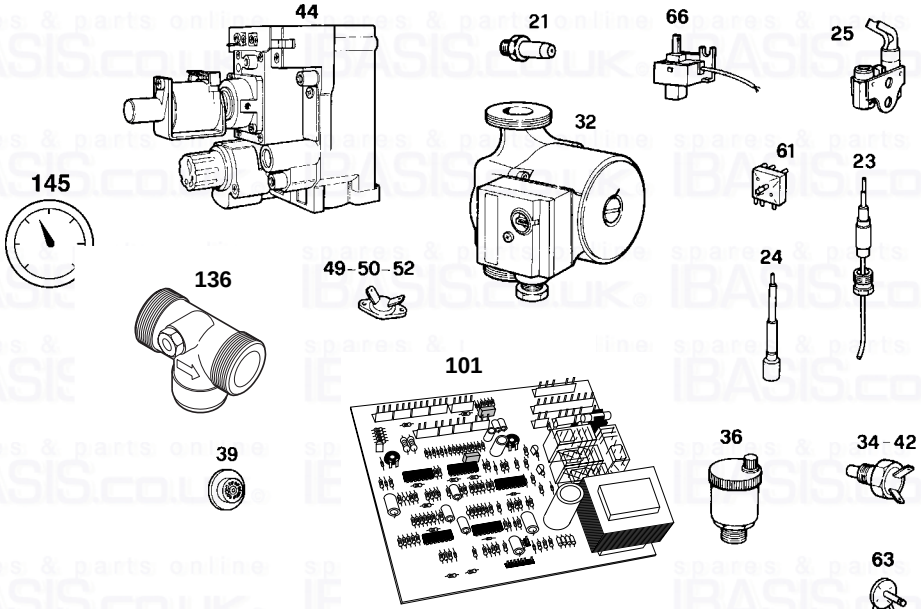

Spare Parts List

Item No.	G.C. Part No.	Makers Part No	No. Off	DESCRIPTION
14	386816	800130	1	C.H. safety valve
21	372176	815850	4	Main injector (Natural Gas)
21	-	815870	4	Main injector (L.P.G.)
23	390210	801170	1	Thermocouple
24	386575	801890	1	Spark electrode
25	386586	801900	1	Pilot
32	386814	800620	1	Central heating pump
34	386818	800310	2	Temperature sensor
36	394246	801160	1	Automatic air vent
39	386829	801220	1	Cold water flow limiter
42	386818	800310	2	Temperature sensor
44	386544	803450	1	Combination gas valve
49	386815	801240	1	Overheat cut-off thermostat
50	386577	800160	1	Heat exchanger limit thermostat
52	386576	801000	1	D.H.W. limit thermostat
61	372225	801230	1	C.H.selector switch
62	-	803830	1	Time clock
63	372224	801260	1	C.H. boiler thermostat
66	372320	801370	1	Microswitch combination gas valve
67	372309	801150	1	Ignition transformer
101	372306	803410	1	P.C.B. VMF7
112	386573	810570	1	Pilot injector (Natural Gas)
112	-	810660	1	Pilot injector (L.P.G.)
136	-	803430	1	Flowmeter
145	-	803890	1	C.H. pressure gauge

spares & parts online
IBASIS.co.uk

spares & parts online
IBASIS.co.uk

spares & parts online
IBASIS.co.uk

Phone numbers:

Installer _____

Service Engineer _____

BECAUSE OF OUR CONSTANT ENDEAVOUR FOR IMPROVEMENT DETAILS MAY VARY SLIGHTLY FROM THOSE QUOTED IN THESE INSTRUCTIONS.

cod. 3540256/1 - 04/98

ALL SPECIFICATIONS SUBJECT TO CHANGE

Stockton Close, Minworth Industrial Park, Minworth, Sutton Coldfield, West Midlands B76 8DH
Tel.: 0121/3523500 - Fax 0121/3523510

spares & parts online IBASIS.CO.UK