OPTIMA 901

04/98

WALL MOUNTED, ROOM SEALED, FAN ASSISTED, GAS COMBINATION BOILER

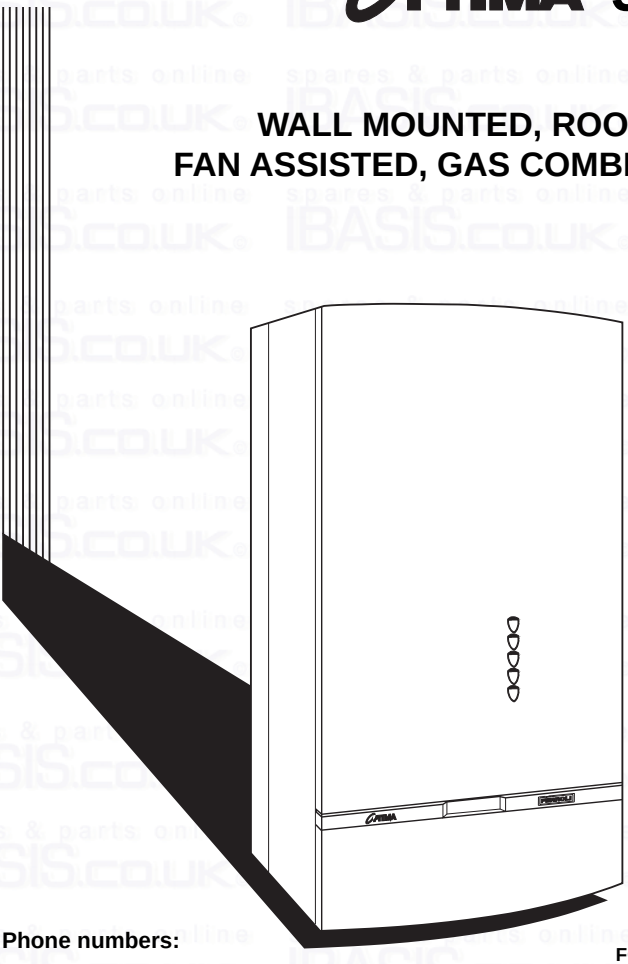

CE

INSTALLATION INSTRUCTIONS

Appr. Nr. B94.01T CE 0063AQ2150

Read these Instructions thoroughly before using the appliance

Phone numbers:

Installer _____

Service Engineer _____

Serial No. _____

FERROLI HELPLINE

FOR SERVICE INFORMATION OR HELP TELEPHONE: 0121 352 35 00
ALWAYS QUOTE YOUR SERIAL NUMBER FOR IMMEDIATE ASSISTANCE

G.C. NO: 47-267-18

ALL SPECIFICATIONS SUBJECT TO CHANGE

Stockton Close, Minworth Industrial Park, Minworth, Sutton Coldfield, West Midlands B76 8DH
Tel.: 0121/3523500 - Fax 0121/3523510

spares & parts online IBASIS.CO.UK

page INDEX

3 General Description
3 Related Documents
4 Technical Data
5 Appliance Dimensions
6 Boiler Flow Diagram
7 Key of boiler flow diagram
8 Installation Details
8 Location of Boiler
8 Air Supply
10 Flue System
10 Gas Supply
10 Water System
12 Central Heating Pump
12 Sizing of expansion vessel
13 Installation of Boiler
13 1. Unpacking
13 2. Mounting the Boiler Jig on the Wall (rear flue)
13 3. Mounting the Boiler Jig on the Wall (side flue)
14 Drilling template
15 4. Preparing the Flue Assembly
16 5. Connecting the Boiler
18 6. Fitting the Flue Assembly
18 7. Electrical Installation
19 8. Commissioning & Testing
19 8.1 Filling the Central Heating System
19 8.2 Filling the Domestic Hot Water System
19 8.3 Electricity Supply
19 8.4 The Gas Installation
19 8.5 To Light the Boiler
21 8.6 To Range Rate the Boiler C.H.
22 Gas pressure adjustment with Honeywell VR 4605 NA 4003 valve
23 Burner pressure C.H.
24 8.7 D.H.W. Burner Pressure
24 9. System operation
24 10. Handing Over to the User
25 Clock
26 Air pressure switch
27 Spare Parts List
28 Domestic Hot Water Performance + Modureg
29 General Wiring Diagram
30 Fast Fault Finding
31 Special Installation Possibilities

General Description

The **Ferroli OPTIMA 901** is a wall mounted, room sealed, fan assisted, combination boiler for Central Heating (C.H.) and domestic Hot Water (D.H.W.).

The boiler is of light weight construction and the heat exchanger provides Central Heating and Domestic Hot Water from an integrally designed unit. The boiler contains its own expansion vessel for sealed systems. The wall mounting jig contains all the isolating cocks for the water and gas supplies which can be fitted to the wall and provided with all the necessary gas and water connections prior to the boiler being attached. The flue can either be left hand, right hand or rear. There are three flue lengths available and they are 0.75 metres (for wall thickness up to 565 mm), 2 metres (for wall thickness up to 1815 mm) and 3 metres (for wall thickness up to 2815 mm). These wall thicknesses assume a rear flue aoutlet. For side flue outlet the effective wall thickness for each flue length is reduced by 91 mm plus the distance of the appliance from the side wall. The Central Heating and the Domestic Hot Water temperature is controlled by the Honeywell Modureg valve in conjunction with the P.C.B. The boiler is fitted with its own Central Heating pump. The pump is switched ON/OFF by the time clock and/or a 24 Volt room thermostat. The pump circuit also has a 6 minute over-run time. There is a Domestic Hot Water flow switch fitted and when there is a demand for Domestic Hot Water (flow of more than 0.5 gallon/minute, 2.5 litre/minute) the Central Heating pump is switched off making available the maximum output of the gas burner for Domestic Hot Water. On the P.C.B. the output for Central Heating can be set. However, this is not required for the majorities of installations as the boiler will automatically adjust its output to the system demand-AUTO-MISER control. This does not influence the maximum output for domestic hot water. The appliance is not suitable for external installation.

Related Documents

This appliance must be installed strictly in accordance with these instructions:

The Gas Safety Regulations (Installations & Use) 1994.

The Local Building Regulations.

The Building Regulations.

The Buildings Standards (Scotland - Consolidated) Regulations.

British Standards Codes of Practice:

B.S. 7593 1993	TREATMENT OF WATER IN DOMESTIC HOT WATER CENTRAL HEATING SYSTEMS
B.S. 5546 1990	INSTALLATION OF HOT WATER SUPPLIES FOR DOMESTIC PURPOSES
B.S. 5440 PART 1	FLUES
B.S. 5440 PART 2	AIR SUPPLY
B.S. 5449 1990	FORCED CIRCULATION HOT WATER SYSTEMS
B.S. 6798 1987	INSTALLATION OF GAS FIRED HOT WATER BOILERS
B.S. 6891 1989	GAS INSTALLTIONS
B.S. 7671 1992	IEE WIRING REGULATIONS
B.S. 4841 1991	SPECIFICATION FOR EXPANSION VESSALS

Model Water Bye Laws.

Technical data

	NATURAL GAS (G20)	PROPANE LPG (G31)
Nominal Heat Input D.H.W. & C.H. (gross)	34.8 kW	34.0 kW
Minimum Heat Input D.H.W. & C.H. (gross)	15.1 kW	14.8 kW
Nominal Heat Input D.H.W. & C.H. (net)	31.3 kW	31.3 kW
Minimum Heat Input D.H.W. & C.H. (net)	13.6 kW	13.6 kW
Nominal Heat Output D.H.W. & C.H.	27.9 kW	27.9 kW
Minimum Heat Output D.H.W. & C.H.	11.8 kW	11.8 kW
Gas rate	3.3 m^3S/h	2.39 kg/h
Maximum burner pressure	15 mbar	34.5 mbar
Minimum burner pressure	3.5 mbar	6.9 mbar
Injector manifold Ø	1.15 mm	0.72 mm
Pilot injector Ø	0.27 mm	0.22 mm
Dimensions (o/all)		
Height	1020 mm	
Width	480 mm	
Depth	360 mm	
Weight (net)	51 kg	
Weight (gross)	53 kg	
Electricity supply:	230V - 50 Hz	
Fuse rating:		
Mains	3 Amp. (main fuse)	
on P.C.B. in boiler	F2 Amp (Fast)	
Electrical input	160 Watt	
Domestic Hot Water flow:		
(35°C rise)	11.4 l/min.	
Minimum Domestic Hot Water Flow	2.5 l/min.	
Maximum domestic cold water Inlet pressure:	10,0 bar	
C.H. Safety valve pressure setting	3 bar	
C.H. Expansion vessel capacity	7 litre	
Min. heating circuit pressure	0,8 bar	
Max. heating circuit pressure	3.0 bar	
Low water pressure switch	0.4 bar	
Boiler water capacity:		
Heating	1.5 litre	
Domestic hot water	0.5 litre	
Pipe connections:		
Gas	22 mm	
Domestic cold water inlet	15 mm	
Domestic cold water outlet	15 mm	
Central heating flow	22 mm	
Central heating return	22 mm	
Pressure relief valve drain	15 mm	
Min. installation clearances. Sides:		
Left hand	5 mm	
Right hand	5 mm	
Front	50 mm* (plus access for service)	
Min. height from worktop to base	200 mm	

Notes:
*** Access to the front of the boiler must be available for maintenance (min. 600 mm)**

Appliance Dimensions

FRONT VIEW

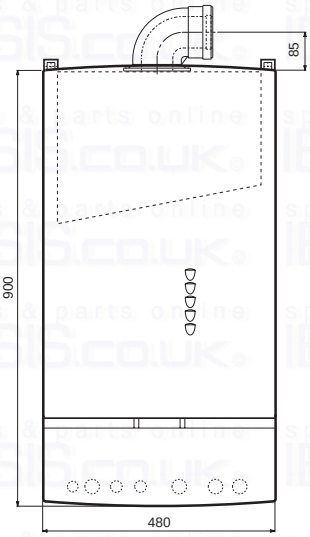

LEFT SIDE VIEW

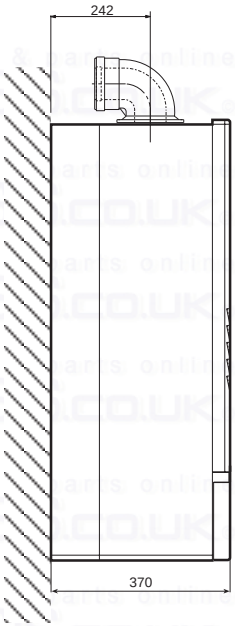

REAR VIEW

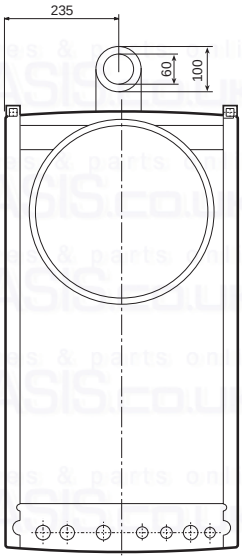

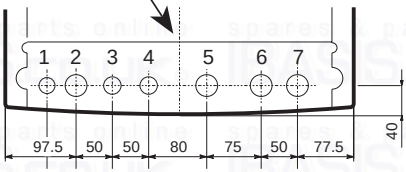

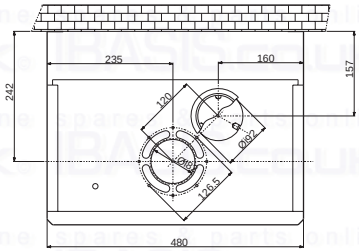

8 - TOP VIEW

Fig. 1

Key

1. Electricity cable entry
2. Gas supply
3. Domestic Hot Water outlet
4. Domestic Cold Water inlet
5. Central Heating Pressure relief valve
6. Central Heating Flow outlet
7. Central Heating Return inlet
8. Air intake for two pipe flue systems

Boiler Flow Diagram

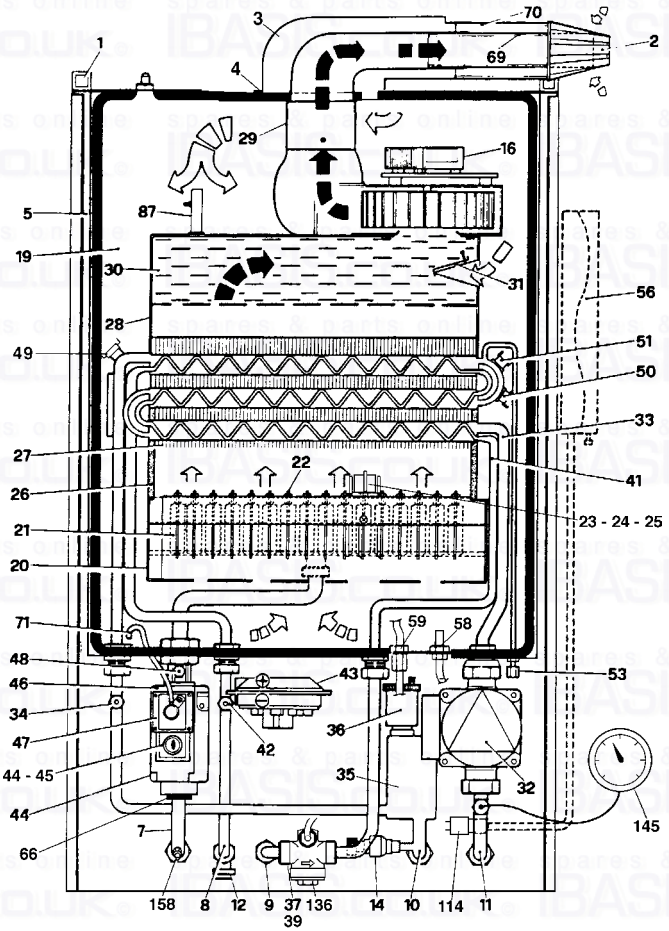

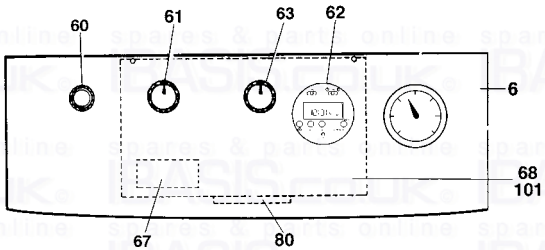

Fig. 2

Key

1. Fixing point
2. Flue terminal
3. Flue/air intake hood
4. Sealing gasket
5. Room sealed compartment
6. Control panel
7. Gas inlet
8. Domestic hot water outlet
9. Cold water inlet
10. Central heating flow outlet
11. Central heating return inlet
12. D.H.W. draining point
14. Central heating safety valve
16. Fan
19. Combustion - heat exchanging compartment
20. Burner assembly
21. Injector manifold
22. Burner
23. Thermocouple
24. Spark electrode
25. Pilot
26. Combustion chamber insulation
27. Copper heat exchanger for C.H. + D.H.W.
28. Flue collector from heat exchanger
29. Internal flue exit
30. Flue/surplus air collector
31. Air pressure control damper
32. Central heating pump
33. C.H. waterway of the heat exchanger
34. C.H. flow temperature sensor
35. Air separator
36. Automatic air vent
37. Cold water inlet filter
39. Cold water flow limiter
41. D.H.W. waterway of the heat exchanger
42. D.H.W. temperature sensor
43. Air pressure switch
44. Combination gas valve
45. Knob gas valve
46. Operator gas valve
47. Modulating regulator (Modureg) gas valve
48. Burner pressure test point
49. Overheat cut-off thermostat 100°C
50. Central heating limit thermostat 88°C
51. Central heating frost thermostat
53. Heat exchanger venting point
56. Expansion vessel
58. Fan air outlet pressure test point
59. Flue outlet pressure test point
60. Extended control knob to gas valve
61. C.H. selector switch
62. Time clock
63. C.H. boiler thermostat
66. Microswitch combination gas valve
67. Ignition transformer
68. Control box with P.C.B.
69. Inner flue duct
70. Outer air intake duct
71. Modulating balance tube
80. 230 V + 24 V roomstat terminal blocks
87. Venturi test point
101. P.C.B. (printed circuit board)
114. Low water pressure switch
136. Flowmeter
145. C.H. pressure gauges
158. Gas inlet pressure test point

Installation Details

Gas Safety (Installation & Use) Regulations: 1984

In the interest of safety, it is the law that all gas appliances are installed by a competent person in accordance with the above Regulations, Building Regulations/Building Standards Scotland, Codes of Practice, current I.E.E. Regulations and the byelaws of the Local Water Undertaking. Failure to comply with the Regulations may lead to prosecution; it is in your interest and that of safety to ensure that the law is complied with.

Important - If the boiler is to be fitted in a timber framed buiding it should be fitted in accordance with the British Gas publication; Guide for Gas Installation in Timber Frame Housing: Reference DM2. If in doubt advice must be sought from the Local Gas Region of British Gas Plc.

Location of Boiler

The installation of the OPTIMA **901** must be on a suitable non-combustible load bearing wall which will provide an adequate fixing for the boiler mounting bracket assembly. The location should be in an area where the water pipes will not be subjected to frost conditions. In siting the combination boiler the following limitations **must** be observed:

The combination boiler may be installed in any room or internal space, although particular attention is drawn to the requirements of the current, i.e. wiring regulations and in Scotland the electrical provisions of the building regulations applicable in Scotland, with respect to the installation of the combination boiler in a room or internal space containing a bath or shower.

Where a room sealed appliance is installed in a room containing a bath or shower any electrical switch or appliance control utilising mains electricity, should be so situated that it cannot be touched by a person using the bath or shower.

Terminal Position

POSITION	MINIMUM SPACING (fig. 3)	mm
A	Directly below an openable window, air vent, or any other ventilation opening	300
B	Below gutters, soil pipes or drainpipes	75
C	Below Eaves	100
D	Below a Balcony	100
E	From vertical drainpipes or soilpipes	75
F	From internal or external corners	100
G	Above adjacent ground or balcony level	100
H	From a surface facing the terminal	600
I	Facing another terminal	1,200
J	From opening (door/window) in carport into dwelling	1,200
K	Vertically from a terminal on the same wall	300
L	Horizontally from a terminal on the same wall	300
N	Below carport	600

A Quinnel Barrat and Quinnel guard (part. No. C2) should be screwed to the wall centrally over the terminal, when the distance is less than 2 m from the outside floor.

Air Supply

The room, cupboard or compartment in which the boiler is installed does not require a purpose provided vent.

Terminal Position

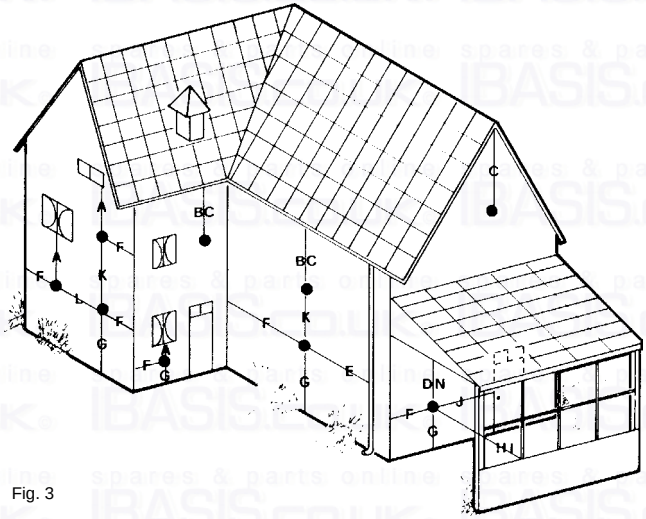

Fig. 3

Minimum Clearance mm

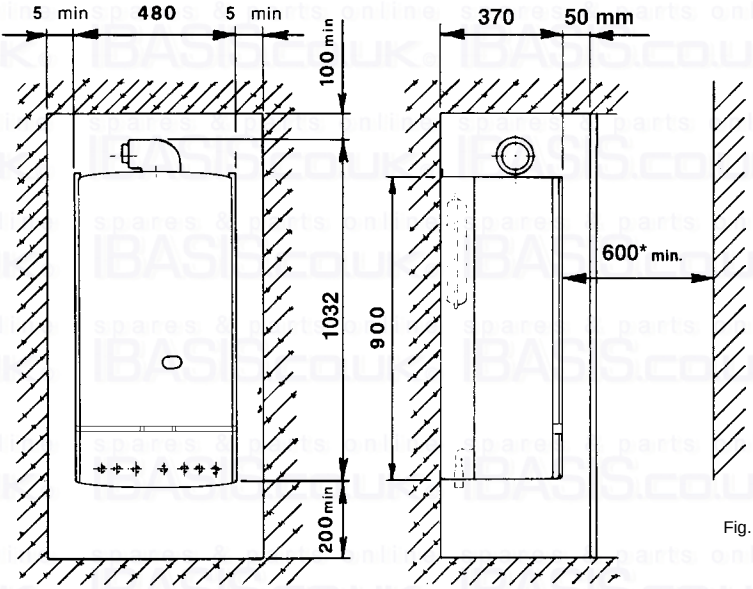

Fig. 5

NOTES

* Access to the front of the boiler must be available for maintenance (min. 600 mm).

Flue system

The boiler allows the flue outlet to be taken from the rear of the boiler or from either side.
A standard flue length of 0.75 metres is provided. Alternative lengths of two or three metres can be supplied (equivalent to wall thicknesses of up to 565, 1815 and 2815 mm for rear flues and deduct 91 mm plus distance from side wall for side outlet flues).
It is absolutely **essential**, to ensure that products of combustion discharging from the terminal cannot re-enter the building, or enter any adjacent building, through ventilators, windows, doors, natural air infiltration, or forced ventilation/air conditioning.

Gas Supply

If necessary the local Gas Region should be consulted, at the installation planning stage, in order to establish the availability of an adequate supply of gas.
An existing service pipe must **not** be used without prior consultation with the Local Gas Region.
A gas meter can only be connected by the Local Gas Region, or by a Local Gas Region's Contractor.
Installation pipes should be fitted in accordance with BS6891-1988.
Appliance inlet working pressure must be 20 mbar MINIMUM.
Pipework from the meter to the combination boiler must be of an adequate size.
The boiler requires 3.3 m^3/h (116 ft^3/h) of natural gas.
Do not use pipes of a smaller size than the combination boiler inlet gas connection.
The complete installation must be tested for gas soundness and purged as described in BS6981-1988. All pipework must be adequately supported. An isolating gas valve is provided and should be fitted on the manifold assembly.

Water System

Central Heating

It must be a sealed system. Detailed recommendations are given in BS6798, BS5449, BS6700 and CP342 Part. 2. Pipework not forming part of the useful heating surface should be insulated to prevent any heat losses or possible freezing (i.e. in roof spaces or ventilated underfloor spaces). Drain taps should be positioned at the lowest point of the system in accessible locations to permit the whole system to be drained down. The drain taps should be in accordance with BS2879. Copper tubing to BS2871, Part. 1 is recommended for water carrying pipework. Pipework in horizontal runs should have a gradient where possible to facilitate the removal of air. It should be ensured that the boiler heat exchanger is not a natural point for collecting air. A typical heating system with domestic hot water circuit is illustrated in fig. 6.

Important - A bypass must be fitted to ensure a minimum flow rate through the boiler of 6 l/min. The bypass should be fitted as far as possible from the boiler if thermostatic radiator valves are fitted throughout.

Make up Water

Provision must be made for replacing water lost from sealed system. Reference should be made to BS6798, for methods of filling and making up sealed systems. There must be no direct connection between the boiler's central heating system and the mains water supply. The use of mains water to charge and pressurise the system directly, is conditional upon the Local Water Byelaw. Again any such connection must be disconnected after use.

Domestic Hot Water

Always fit a water softener or descaler in «hard water areas». A 15 mm copper connection point on the boiler jig bracket for attaching to the main supply is provided. The maximum domestic water pressure for the inlet supply is 10 bar (145 P.S.I.). If the cold mains supply exceeds 5 bar (72 P.S.I.), a water governor or pressure reducing valve must be fitted by the installer into the mains supply in an inconspicuous but accessible position preferable between 3 and 5 metres (10-16 ft) before the appliance. Such a valve must be approved by the Water Research Council.

Attention - Is drawn to the Model Water Byelaws.

Fittings manufactured from duplex (alpha-beta) brass are not acceptable for underground use and certain water undertakings will not accept their use above ground.

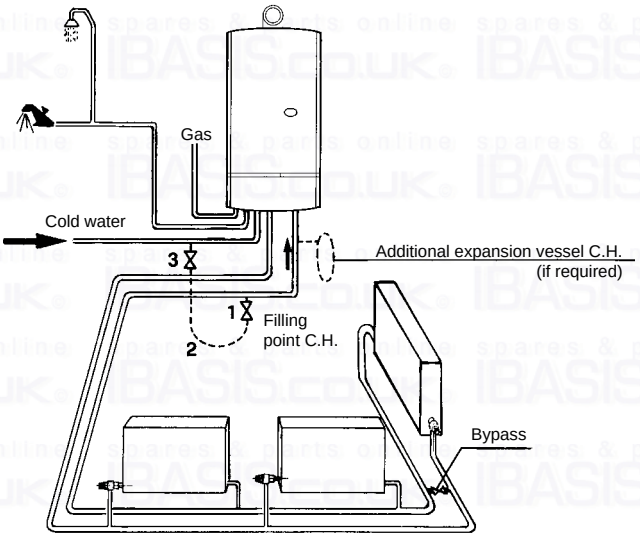

Fig. 6

NOTE: A bypass must be fitted as far as possible from the boiler if thermostatic radiator valves are fitted throughout.

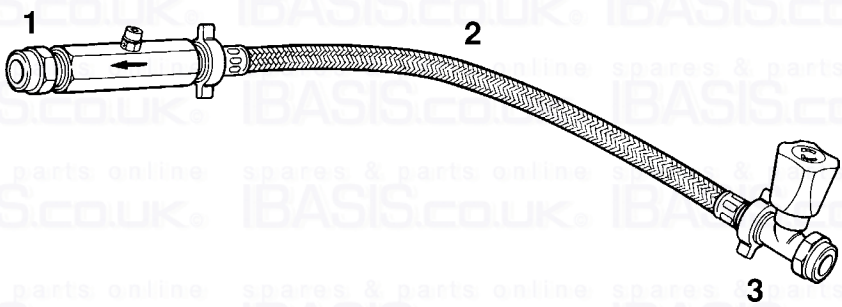

Key
1. Filling point C.H.
2. Temporary connection
3. Cold water supply

Fig. 7

Built-in Central Heating Water Circulating Pump

The pump head available for circulating the water is given in fig. 8.

N.B. - The pump is factory set at position 3. The pump is a Grundfos type 15-50 UPS series.

Grunfos Pump performance graph

Note - Minimum flow through boiler heat exchanger at any time should not fall below 6 litres per minute.

If required an additional expansion vessel may be fitted to the central heating return inlet.

If the total volume of water in the system exceeds 40 litres an additional expansion vessel must be fitted to the central heating return inlet.

Pump performance curve Grundfos UPS 15-50

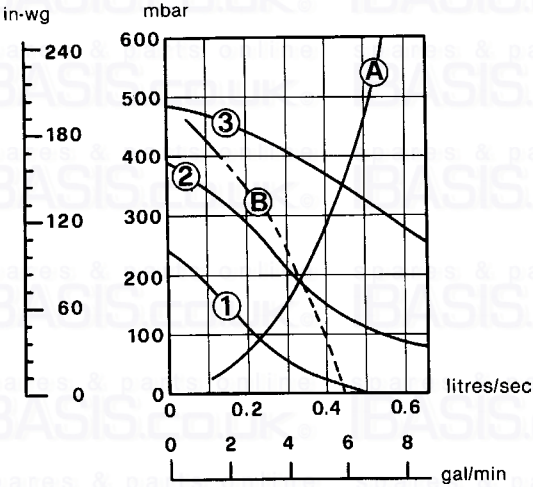

1 2 3 Speed settings
A Boiler pressure drop
B Max. available pump head C.H.

Fig. 8

SAFETY VALVE SETTING (bar)	3.0					
VESSEL CHARGE PRESSURE (bar)	0.5			1.0		1.5
INITIAL SYSTEM PRESSURE (bar)	1.0	1.5	2.0	1.5	2.0	2.0
TOTAL WATER CONTENT of SYSTEM	EXPANSION VESSEL VOLUME (litres)					
LITRES						
25	3.5	6.5	13.7	4.7	10.3	8.3
50	7.0	12.9	27.5	9.5	20.6	16.5
75	10.5	19.4	41.3	14.2	30.9	24.8
100	14.0	25.9	55.1	19.0	41.2	33.1
125	17.5	32.4	68.9	23.7	51.5	41.3
150	21.0	38.8	82.6	28.5	61.8	49.6
175	24.5	45.3	96.4	33.2	72.1	57.9
200	28.0	51.8	110.2	38.0	82.4	66.2
For syst. volumes other than those given above, mult. the syst. volume by the factor across	0.140	0.259	0.551	0.190	0.412	0.33

SIZING OF ADDITIONAL EXPANSION VESSELS:
Deduct from the value given in the table the 7 litre vessel supplied.

Note

1. Fill C.H. installation to min. 1.5 bar.
2. Select by preference the expansion vessel for increased system pressure of 2.0 bar
3. Expansion vessel must be fitted to Central Heating Return Inlet
4. The standard 7 litres expansion vessel is charged to 1 bar

Fig. 9

Installation

Note - To mount the boiler on the wall, a two person lift will be needed.

1.0 UNPACKING

The appliance is delivered in 2 cartons.

1.1 The large carton contains the boiler, and the Installation/Servicing and Users Instructions.

1.2 The second carton contains the mounting jig assembly, complete with isolating valves, the assembly fixing screws and wall plugs (x4), the boiler mounting nuts and washers (x2), drilling template, flue assembly and flue bend.

When the cartons are unpacked examine for any signs of damage in transit. All protective plastic should be left in place until installation is complete.

2.0 FIXING THE MOUNTING JIG ON THE WALL (Rear Wall Flue Applications)

2.1 Select the boiler location carefully ensure that all requirements given in previous text are satisfied. Fig. 10 will also give guidance to fixing dimensions.

2.2 Locate template on wall, mark the positions of the four jig bracket fixing holes and the flue opening.

2.3 Carefully cut the circular hole (118 mm minimum diameter) for the flue assembly.

2.4 Using a 10 mm drill, drill 70 mm deep holes to accept the wall plugs, and insert wall plugs.

2.5 Fit the mounting jig assembly using the four fixing screws provided (Ensure that all the service cocks are in the OFF position). Operate valves several times to ensure they are free.

2.6 With the exception of the connection to the pressure relief valve, make all the water and gas connections to the jig bracket valves. Fully tighten (fig. 11). Water connections can be made with compression or capillary fittings (before the gas inlet to the boiler there must be at least 100 mm of straight before any bends).

3.0 FIXING THE MOUNTING JIG ON THE WALL (Side Wall Flue Applications)

3.1 Select the boiler location carefully ensuring that all the requirements given in previous text are satisfied. Fig. 10 will aso give guidance.

3.2 Locate the template on wall and mark the position of the four jig bracket fixing holes.

3.3 Using a 10 mm drill, drill 70 mm deep holes to accept the wall plugs, and insert wall plugs.

3.4 Fit the mounting jig assembly using the four fixing screws provided.

3.5 Extend a horizontal line from the centre of the rear flue outlet to the side wall.

3.6 Mark the centre line (vertically) for the flue assembly hole, and mark the centre of the hole.

3.7 Carefully cut the circular hole (118 mm minimum diameter) for the flue assembly.

Important Note - Always use two spanners to prevent twisting of soft copper pipework on the boiler.

Flush out the water system.

Note - The maximum inlet cold water pressure must not exceed 10 bar (145 P.S.I.) and a water governor or a pressure reducing valve will be required if the pressure is in excess of 5 bar (72 P.S.I.).

Ensure all pipework is adequately supported.

Drilling template

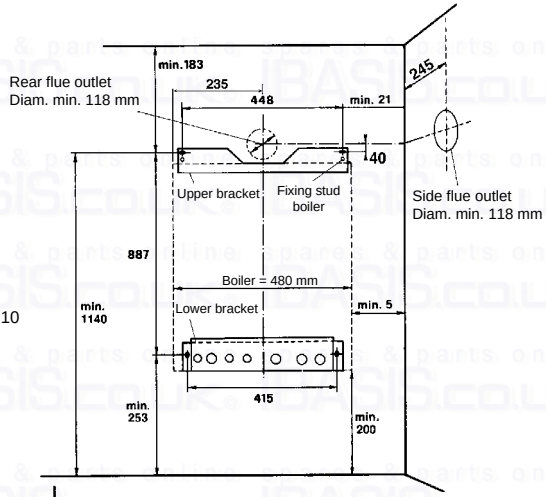

Fig. 10

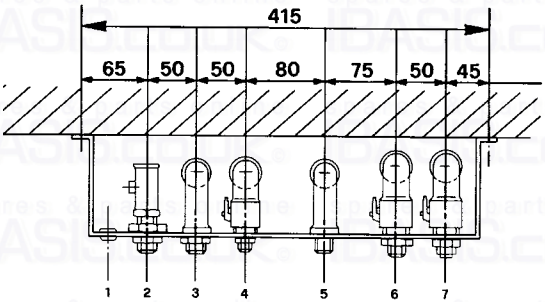

1 = Electrical cable entry
2 = Gas supply
3 = Domestic Hot Water outlet
4 = Domestic Cold Water Inlet
5 = Outlet Central Heating safety valve
6 = Central Heating flow outlet
7 = Central Heating return inlet

2 = 22 mm
3-4-5 = 15 mm
6-7 = 22 mm

2 Gas 22 mm

3 Domestic Hot Water outlet 15 mm

5 Outlet central heating safety valve 15 mm

4 Domestic Cold Water inlet 15 mm
6 Central Heating flow outlet 22 mm
7 Central Heating return inlet 22 mm

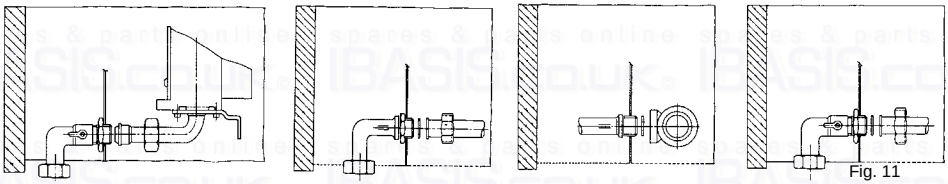

Fig. 11

Important Note - Always use two spanners to prevent twisting of soft copper pipework.

Note - The central heating safety valve (5) should be piped 15 mm to discharge safely outside the property.

4.0 PREPARING THE FLUE ASSEMBLY

4.1 **Rear Flue Outlet** (fig. 12)

Important - The aluminium flue pipe must protrude into the outside grill by 60 mm, never cut it to the same length as the plastic air pipe (aluminium flue pipe = plastic air inlet pipe + 70 mm !).

Aluminium flue pipe length = Plastic air inlet pipe length plus 70 mm longer.

4.1.1 Accurately measure the Wall thickness (P1)

4.1.2 From the end opposite to the terminal, cut the plastic air duct (dimension A1) to length (P1 + 192 mm).
Note - That the terminal is **not** included in A1.

4.1.3 Cut the aluminium flue duct to length (P1 + 262 mm) (dimensions F1).
Note - The aluminium flue pipe must be 70 mm longer than the plastic air inlet pipe.

4.1.4 Drill a 3 mm hole 15 mm from the plain end of plastic air duct.

4.1.5 Place flue components to one side to be used later.

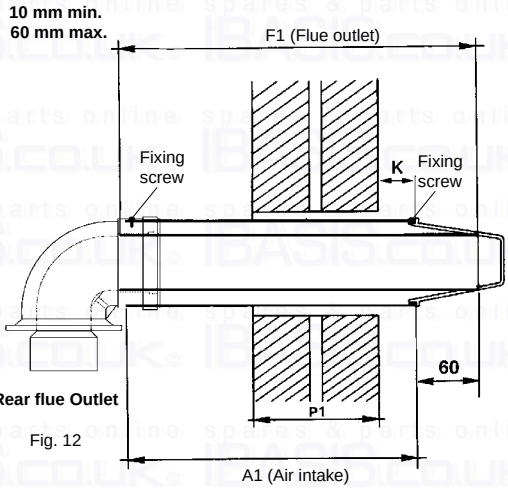

Rear flue Outlet

Fig. 12

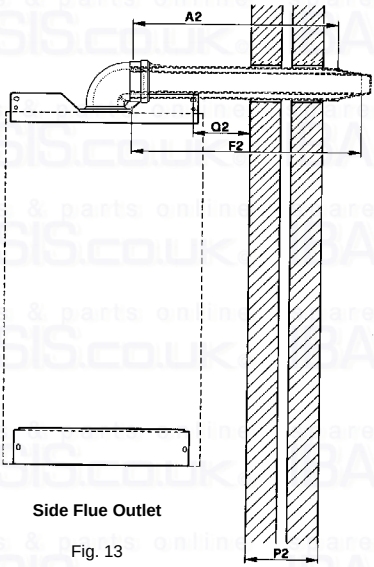

Side Flue Outlet

Fig. 13

4.2 **Side Flue Outlet** (fig. 13).

Important - The aluminium flue pipe must protrude into the outside grill by 60 mm, never cut it to the same length as the plastic air pipe.

Aluminium flue pipe length = Plastic air inlet pipe length plus 70 mm longer.

4.2.1 Accurately measure the Wall thickness (P2).

4.2.2 Accurately measure the distance from the centre of the stud fixing of the mounting jig assembly to the side wall (Q2).

4.2.3 From the end opposite to the terminal, cut the plastic air duct (dimension A2) to length (P2 + Q2 + 180 mm).
Note - That the terminal is **not** included in length A2.

4.2.4 Cut the aluminium flue duct to length (P2 + Q2 + 250 mm) (dimension F2).
Note - The aluminium flue pipe must be 70 mm longer than the plastic air inlet pipe.

4.2.5 Drill a 3 mm hole 15 mm from the plain end of plastic air duct.

4.2.6 Place flue components to one side to be used later.

5.0 CONNECTING THE BOILER

5.1 Place the boiler on its back.

5.2 Remove the boiler base plate, four screws (fig. 16). Remove the plugs fitted to the boiler water connections.
Remove the bag of sealing washers from the boiler pipework. Remove the front panel by gripping on both sides, sliding up and pulling away from the main boiler.

5.3 Lift boiler as shown in fig. 15 onto the top studs and fit supplied nuts and washers hand tight.

5.4 Lift at bottom to engage the water and gas connections. Tighten central heating flow and return, and the domestic hot water inlet and outlet, using appropriate sealing washers. Tighten the gas union.

5.5 Screw the pressure relief valve adaptor provided, through the jig bracket into the valve, using the remaining washer (fig. 17).

5.6 Connect the pressure relief valve discharge pipe (15 mm) to the outside of the building, where possible over a drain. The discharge must be such that it will not be hazardous to occupants or passers-by cause damage to external electric components or wiring. The pipe should be directed towards the wall.

It must not discharge above an entrance or window, or any type of public access. The installer must consider that the overflow could discharge boiling water.

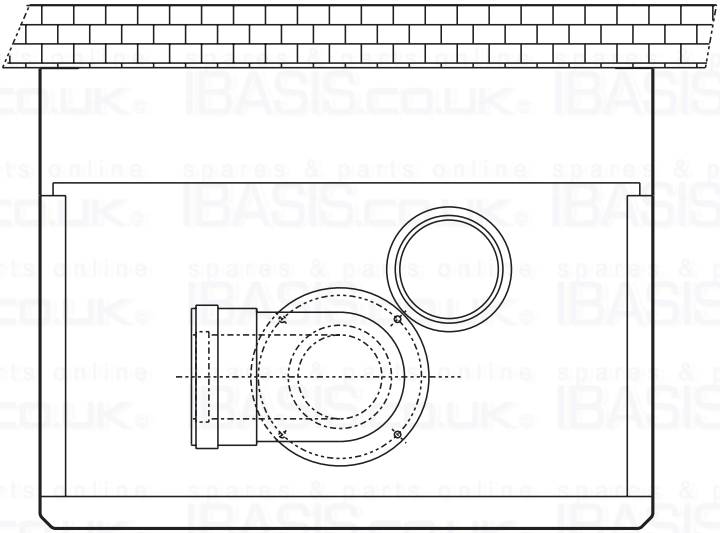

TOP VIEW BOILER SIDE OUTLET

Fig. 14

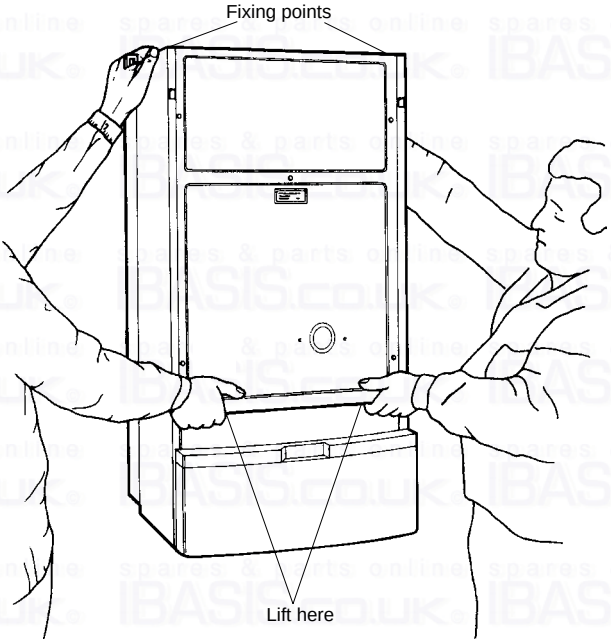

Fig. 15

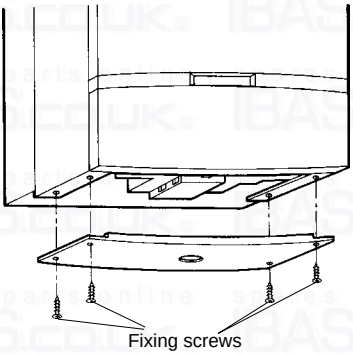

Fig. 16

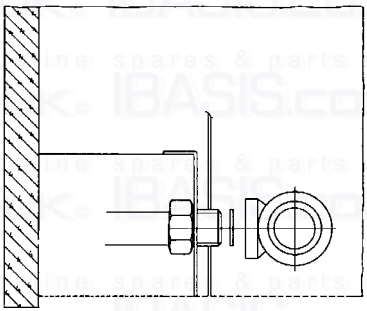

Fig. 17

6.0 FITTING THE FLUE ASSEMBLY

6.1 **With Sufficient Clearance To Insert Assembly From Inside**

6.1.1 Insert the flue assembly into the wall.

6.1.2 Insert the flue bend in the top plate of the boiler

6.1.3 Secure the flue bend.

6.1.4 Fully insert the flue assembly into the boiler flue bend. Insert the self tapping screw supplied. Fully tighten.

6.1.5 Check the terminal relationship with the wall as shown in fig. 12.

6.1.6 Make good internal wall face.

6.1.7 Make good the outside wall face, re-weatherproof.

6.2 **With insufficient Clearance To Insert Assembly From Inside**

6.2.1 Insert the flue bend in the top plate of the boiler

6.2.2 Secure the flue bend.

6.2.3 From outside, push flue duct, then the air duct through the wall.

6.2.4 Fully insert the flue duct into the flue bend, then the air duct. Secure the air duct with the self tapping screw provided.

6.2.5 Continue as detailed in 6.1.5 above.

7.0 ELECTRICAL INSTALLATION

Electrical installation must be carried out by a competent electrician. The appliance is to be connected to a 240 V ~ 50 Hz supply (see fig. 18). The supply fuse rating is 3A. The terminals are accessible after removing the white base plate and single screw securing the terminal cover (see fig. 18).

7.1 **Procedure**

7.1.1 The supply cable must be no less than 0.75 mm (24x0.2 mm) to BS6500 table 16.

7.1.2 The earth conductor must be cut longer than the live and neutral (fig. 19).
Connect the Supply Cable to the terminal block marked 240 V ~ 50 Hz, L, N, the supply cable is to be connected as follows:

i) Connect the brown wire to the L (live) terminal).

ii) The blue wire to the N (neutral) terminal.

iii) The green/yellow wire to the (earth) terminal.

7.1.3 Secure the cable with the cable clamp. The supply cable can be connected to the mains supply by the use of an unswitched shuttered socket-outlet in conjunction with the 3A fused 3 pin plug both in accordance with BS 1363. This provides complete isolation. Alternatively, a fused double pole switch having a contact separation of at least 3 mm, in all poles and provided just for the boiler and its external controls can be used. A wiring diagram is provided on the appliance, attached to the rear of the front panel. In addition, there is one in this manual (fig. 25). Attention is drawn to the requirements of the current I.E.E. Regulation and in Scotland, the electrical provisions of the Building regulations.

7.2 **Room Thermostat** (fig. 18) (or remote time clock connection)

7.2.1 Please note that the room thermostat, clock switch connection is 24 V. To connect mains voltage to these terminals will seriously damage the printed circuit board. The room thermostat and clock switch connector block is situated within the connector box. Twin core cable should be used for this connection (terminals 4 and 5).

7.2.2 If using a remote 240 Volt time clock ensure that the motor and switch connections are totally separate in the clock and that the switch connections are independent for the 24 Volt terminals (4 and 5) on the boiler.

External controls: room stat or remote time clock in the place of loop terminals 4 and 5. Please note 24 V only, use only voltage free contacts.

IMPORTANT

If 230 V is connected to terminals 4 or 5, damage will be caused to the P.C.B.

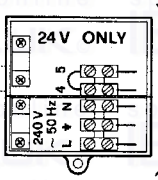

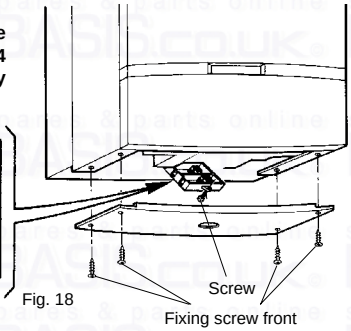

Fig. 18

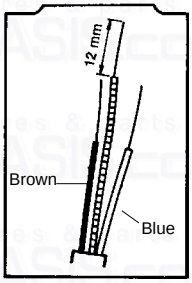

Fig. 19

IF IN DOUBT PHONE 021 313 1030

8.0 COMMISSIONING AND TESTING

8.1 Filling the Central Heating System

Remove the top front panel by gripping both sides and lifting forward away from main boiler assembly.

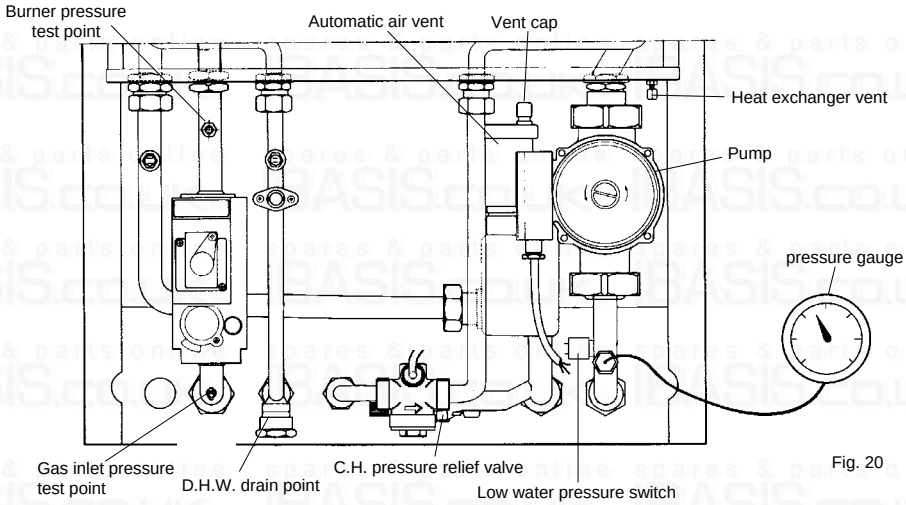

Fig. 20

Loosen the cap of the automatic air vent (fig. 20) and leave it loose.
Open the central heating flow and return cocks (fig. 11).
Gradually fill the system as detailed in Make up Water.
While filling, vent the heat exchanger at venting point by loosening cap (fig. 20) and vent each radiator.
Tighten cap on heat exchanger air vent.
Ensure the working pressure, when filled, is between 1 to 1.5 bar on the pressure gauge (see technical data).
Check the system for leaks.
Flush system in accordance with B.S. 7593

8.2 Filling the Domestic Hot Water System

Close all hot water draw off points. Open main cold water stop cock and ensure the cold water inlet cock is open at the boiler jig bracket (fig. 11). Slowly open each hot tap in turn until clean water, free from air pockets, is seen.
Check system for leaks.

8.3 Electricity Supply

Carry out preliminary checks (i.e. earth continuity, polarily short circuit and resistance to earth using a suitable multimeter).

8.4 The Gas Installation

The whole of the gas installation including the meter, should be inspected and tested for soundness, and purged in accordance with the recommendations of BS6891-1988.

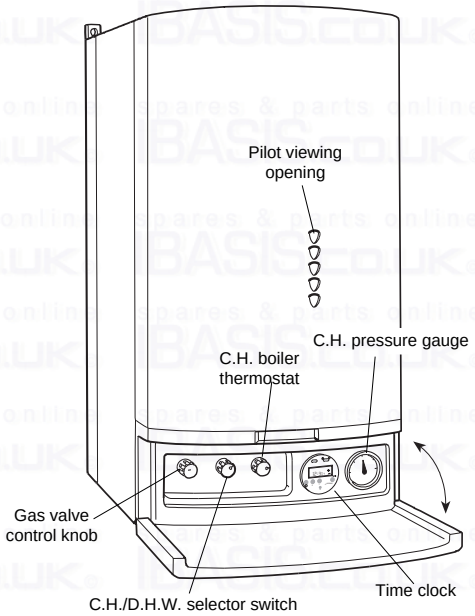

fig. 21

8.5 **To Light the Boiler** (fig. 21)

a. Open controls panel door.
b. Switch on electricity supply.
c. Adjust room thermostat and all external controls to «ON». Check operation of pump.
d. Turn the boiler thermostat to maximum. Fan will run (A waiting time of max 3 minutes before fan will run is possible!). Wait 20 seconds after fan starts to run at full speed.
e. Depress the gas control knob fully (this should operate the electronic ignitor). When the pilot flame is seen to light through the pilot viewing window, keep the control knob fully depressed for a further 15 seconds, then release.

Should the pilot fail to remain alight (or goes out on any other occasion i.e. if electricity supply as been turned off) wait 3 minutes and repeat. Should the pilot still fail to remain alight, refer to the fault finding section.

f. With the pilot burner established, observe that the main burners cross-light smoothly.
g. Temporarily turn off by switching off electricity supply.

Important Note: If the burner stops for C.H. only after a waiting time of 3 minutes will the boiler will light again!

Burner Pressure C.H. and D.H.W.

8.6 **To Range Rate the Boiler C.H. (not required for standard installations)**

The boiler can be range rated for an output from 11.8 kW up to 27.9 kW. When the boiler is supplied it is factory set at the maximum output 27.9 kW.

Procedure

a. Release the control panel fixing screws (fig. 30) and lower panel.

b. Loosen the screw in the burner pressure test point (fig. 22) and attach a gauge.

c. Switch on the electricity supply to relight the main burner.

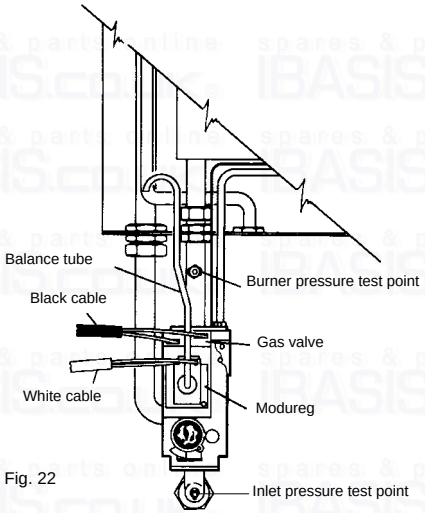

Fig. 22

Pressure settings	Minimum mbar	Maximum mbar
Natural Gas	3.0	15.0
L.P.G.	6.9	34.5

Note 1 - Modulation is available on central heating, so the procedures must be carried out while the system is relatively cold. Recheck boiler thermostat is set to maximum.

d. Adjust the potentiometer P1 on the PCB (fig. 24) in the control panel until the required burner pressure is obtained (Anticlockwise to reduce the pressure).

Note 2 - The range of inputs with corresponding burner pressure is given on the Data badge which is situated behind the top front panel. Further informations is on (fig. 23).

e. With the pressure set, turn off the electrical supply and mark the set input on the Data badge (with sticker supplied).

Burner Pressure C.H. and D.H.W.

P1 = C.H. range rating to be set on site

P2 = D.H.W. temperature (factory set, not to be adjusted)

P1 Adjust with screwdriver!

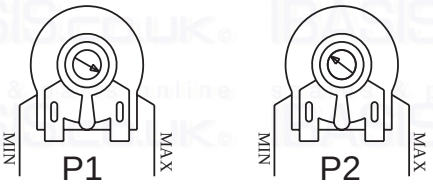

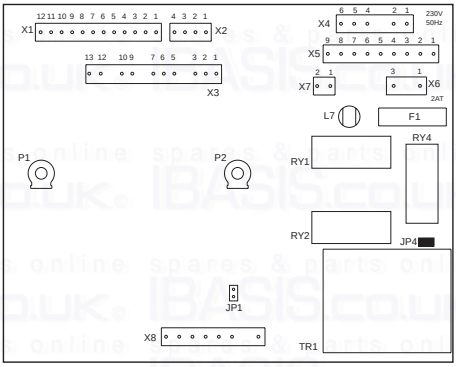

Fig. 23

Honeywell VR 4605 NA 4003 valve
with V7335A4014 Modureg

Gas pressure Adjustment

1 - With the burner lit:

2 - Connect suitable pressure gauge to burner test point "B", and then:

3 - Disconnect air pressure compensation tube **"H"**;

4 - Disconnect the wires from coil **"C"** of the Modureg;

5 - Remove protective cover **"D"**;

6 - Remove coil **"C"** by opening the coupling spring **"I"**;

7 - Screw the minimum adjustment screw **"E"** up tightly. (clockwise)

8 - Unscrew lock nut **"F"** on sleeve **"G"**;

9 - Adjust maximum pressure by rotating sleeve **"G"** clockwise to increase pressure and anticlockwise to reduce pressure;

10 - Tighten sleeve lock but **"F"** then check that the pressure is still at the required value;

11 - Adjust minimum pressure by rotating screw **"E"** anticlockwise until the required value is reached;

12 - Fit coil **"C"** by sliding it into the sleeve, pushing and rotating it lightly until the coupling spring **"I"** clicks into place;

13 - Shut down and ignite the burner, checking that the minimum pressure value is stable;

14 - Reconnect the wires to coil **"C"** of the Modureg;

15 - Reconnect air pressure compensation tube **"H"**;

16 - Replace protective cover **"D"**;

17 - Turn burner off, remove pressure gauge, close and test, test point;

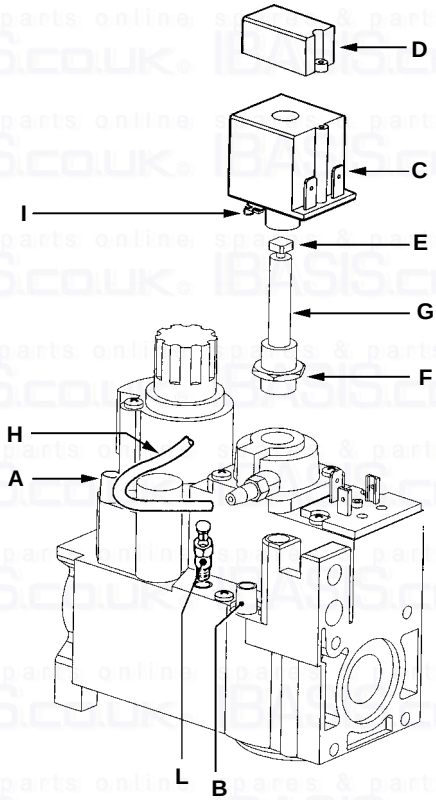

Key

A - Test point inlet pressure
B - Burner test point
C - Coil
D - Protective cover
E - Minimum adjustment screw
F - Lock nut
G - Sleeve
H - Pressure compensation tube
I - Coupling spring
L - Adapter (for only LPG version)

Burner Perssure C.H.

- Natural gas
- L.P.G. (Propane)

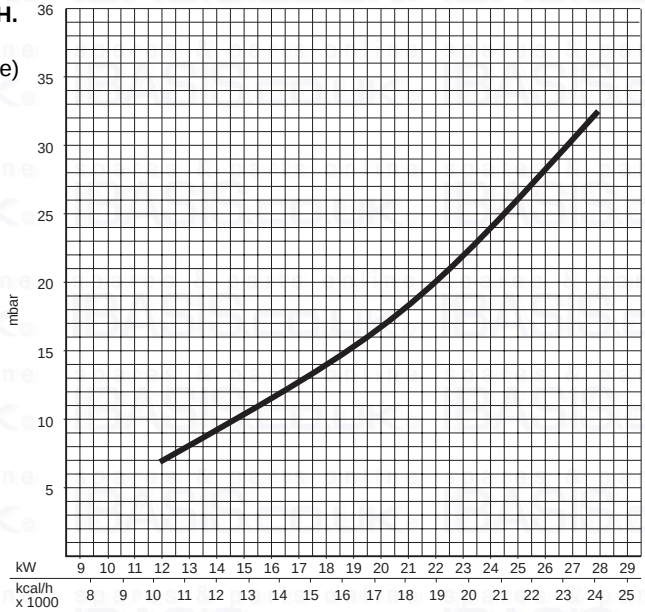

Fig. 24a - Burner pressure VS C.H. Load with L.P.G. (G31) (Propane)

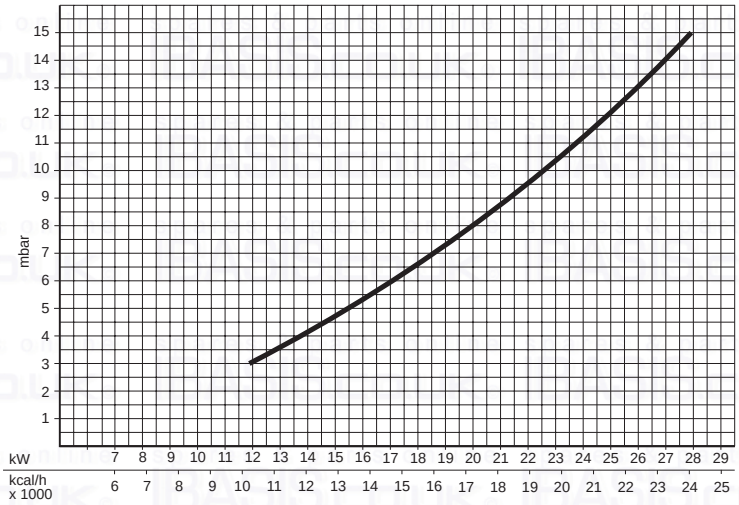

Fig. 24b - Burner pressure VS C.H. load with natural gas (G20)

8.7 **D.H.W. Burner Pressure**

The domestic hot water burner pressure is not range rateable and not adjustable but the maximum and minimum burner pressure should be checked as follows:

a. Check electricity supply is still off.
b. Open a D.H.W. tap at high flow until the water runs cool and leave running.
c. Switch on the electricity supply.
d. The pressure should be 14 mbar -/+ 0.5 mbar.
e. Disconnect one of the wires from the «Modureg» (fig. 22), this will reduce the burner to minimum which should read 3.0 mbar +/- 0.5 mbar. If the burner pressure is not as stated check the inlet working pressure (fig. 22) which should be minimum 20 mbar. If that is correct, consult Ferroli. No attempt should be made to alter D.H.W. burner pressure.
f. Switch off electrical supply and close hot tap.
g. Reconnect the wire to the «Modureg». Remove pressure gauge, tighten the test screws.
h. Replace control panel (2 screws).
i. Turn on electricity supply, open a hot tap to full flow and when the burner lights, test for gas soundness with a leak detection fluid around the gas valve and connections including the pressure test point screws.

Note - The cutting of the electricity supply may result in the pilot being extinguished - re-light if need be, after waiting three minutes at least.

9.0 SYSTEM OPERATION

Let the boiler operate normally on central heating for about 30 minutes.

I) Vent radiators.
II) Vent heat exchanger.
III) Examine all pipework for leakage.
IV) Turn on a D.H.W. tap and check that the C.H. pump stops running.
V) As the D.H.W. temperature reaches 60°C check the burner for modulation.

Turn the gas valve «off», (twist left hand white button 1/12th turn clockwise and release), and isolate electricity supply.
Drain down the central heating system fully, when hot.
Refill the system as previously instructed. Repeat the venting.
Examine the system's water pressure and top up as necessary.
Replace the casing front panel and close the control panel cover.

10.0 HANDING OVER TO THE USER

After completion of installation and commissioning of the system:

a. Hand over the User's Instructions' to the Householder and explain His/Her responsability under the Gas safety (Installation and Use) Regulations 1994.
b. Explain and demonstrate the lighting and shutting down procedure.
c. Explain the operation of the boiler including the use and adjustment of ALL system controls.
Advise the User of the precautions necessary to prevent damage to the system and to the building, in the event of the system remaining inoperative during frost conditions.
d. Stress the importance of regular servicing by a qualified Heating Engineer and that a comprehensive service should be carried out at LEAST ONCE A YEAR.

Time Clock

A 24 hour time clock is fitted to the boiler to control the central heating, this will come into operation when the selector switch is turned to the position marked “heating timed and hot water”.

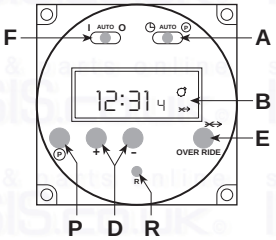

A Slide switch: set clock - auto - set programme
B Display. Symbol ♂ in Display = Timer ON
P Select programme ON/OFF 1.....8
D Push buttons Time + Time –
E Override: Boiler will switch ON if boiler is OFF; and OFF if is ON
F I=Heating continuous - AUTO=Heating timed - O=Heating disabled
R Reset (with pencil) only with switch **A** in set clock position

To set time of day

1. Slide switch (**A**) to left position
2. Using button + and – adjust until the correct time is shown on display (**B**).

Pre Set Programmes. The timer is pre programmed with 3 ON and 3 OFF times.

6:30 - 8:30
12:00 - 12:00
16:30 : 23:30

If these are suitable no programming is required and the slide switch (**A**) can be moved to the Auto position and the central heating will be ON for these periods. (12:00 - 12:00 will not switch on the boiler)

To Set Own ON and OFF times. Symbol ♂ in Display = ON time

1. Slide switch (**A**) to right position (**P**)

Display 6:30 1 ♂

2. Press button (**P**)

Display 8:30 2

3. Press button (**P**)

Display 12:00 3 ♂

4. Press button (**P**)

Display 12:00 4

5. Press button (**P**)

Display 16:30 5 ♂

6. Press button (**P**)

Display 22:30 6

7. The timer can be programmed with up to 8 ON and 8 OFF times by repeating the above procedure.

1.1 Use buttons + and - to set 1st ON time eg. 6:00

Display 6:00 1 ♂

2.1 Use buttons + and - to set OFF time, eg. 9:00

Display 9:00 2

3.1 Use button + and - to set 2nd ON time, eg. 12:30

Display 12:30 3 ♂

4.1 Use button + and - to set 2nd OFF time eg. 14:00

Display 14:00 4

5.1 Use button + and - to set 3rd ON time, eg. 16:00

Display 16:00 5 ♂

6.1 Use button + and - to set 3rd OFF time eg. 23:30

Display 23:30 6

8. On completion of programming slide switch (**A**) to Auto position, the time of day will be displayed and the central heating will switch ON and OFF according to the programme set.

Over ride

By pressing the over ride button (**E**) the timer programme is over ridden ie, if programme is in OFF time it will come ON and if in ON time will go OFF.

The timer will revert back to it set programme on reaching the next ON or OFF time.

When the programme is on over ride the sign ⤫ will be shown in the display window (**B**).

Reset Button

By the use of a pencil the reset button can be pushed (**R**). This will clear all programmes apart from those factory pre set.

Reset is only possible with switch (A) in set Clock position!

AIR PRESSURE SWITCH

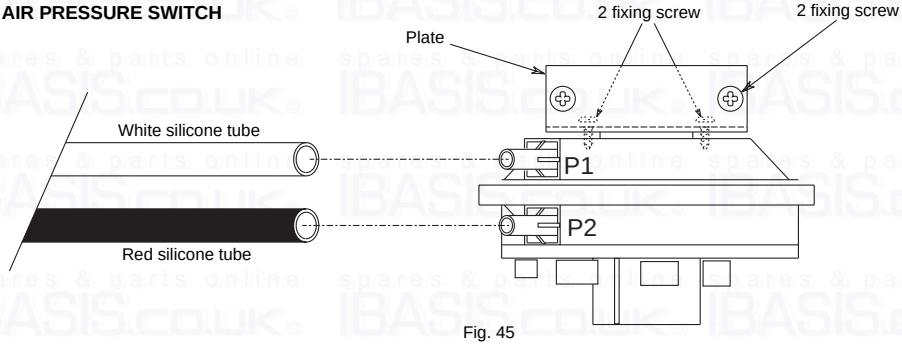

Fig. 45

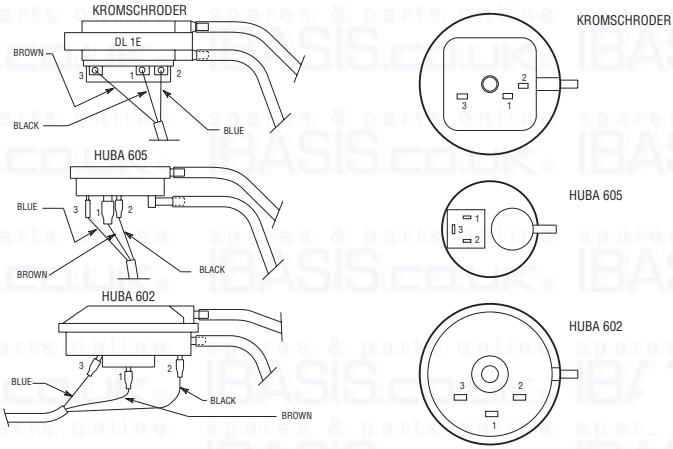

Fig. 46

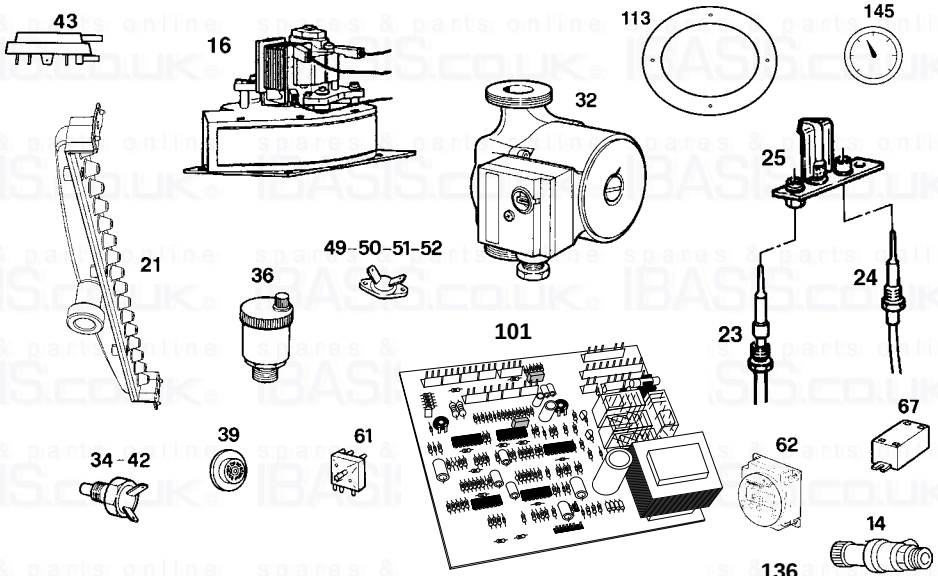

Spare Parts List

Item No.	G.C. Part No.	Makers Part No	No. Off	DESCRIPTION
14	386816	800130	1	C.H. safety valve
16	-	803860	1	Fan
21	-	-	1	Injector manifold (Natural Gas)
21	-	-	1	Injector manifold (L.P.G.)
23	-	801490	1	Thermocouple
24	-	801090	1	Spark electrode
25	-	801510	1	Pilot
32	-	800620	1	Central heating pump
34	386818	800310	2	Temperature sensor
36	394246	801160	1	Automatic air vent
39	386829	801220	1	Cold water flow limiter (10 lt/min.)
42	386818	800310	2	Temperature sensor
43	381691	800140	1	Air pressure switch
44	386544	803450	1	Combination gas valve
49	386815	801240	1	Overheat cut-off thermostat
50	386577	800160	1	Heat exchanger limit thermostat
51	386828	800180	1	Heat exchanger frost thermostat
61	372225	801230	1	C.H.selector switch
62	-	803840	1	Time clock
63	372224	801260	1	C.H. boiler thermostat
66	372320	803460	1	Microswitch combination gas valve
67	372309	801150	1	Ignition transformer
101	-	803410	1	P.C.B. VMF7
112	-	801610	1	Pilot injector (Natural Gas)
112	-	801470	1	Pilot injector (L.P.G.)
113	-	823071	1	Special two pipe flueadapter
136	-	803430	1	Flowmeter
145	-	840187	1	C.H. pressure gauge

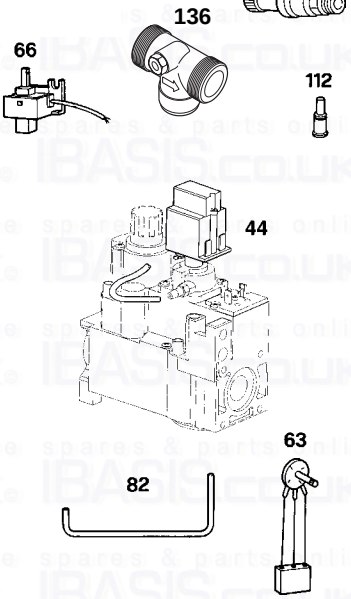

Domestic Hot Water Performance

Fig. 1 - D.H.W. Pressure Drop VS. flow
A = Standard with cold water Flow Restricter
B = Cold Water Flow Restricter Removed

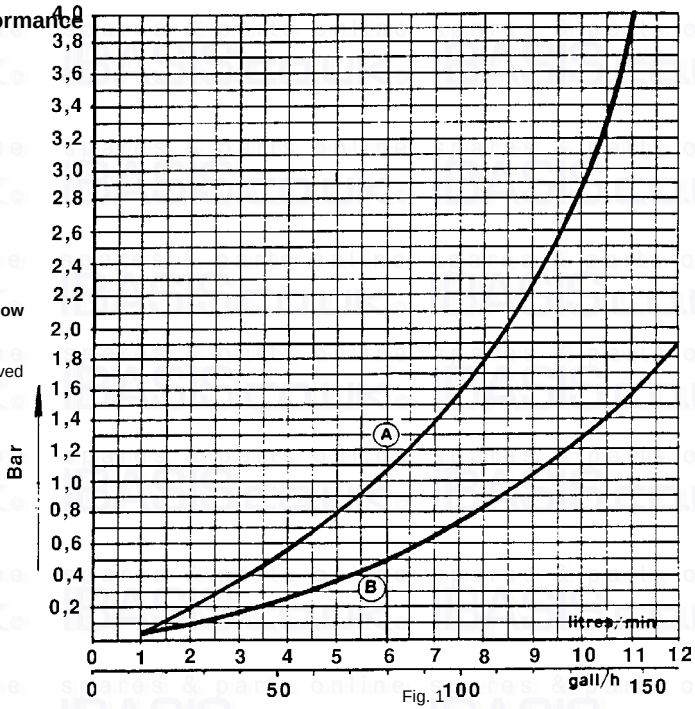

Fig. 1

Fig. 2 - D.H.W. temperature VS. flow
A = Cold Water 15°C
B = Cold Water 5°C

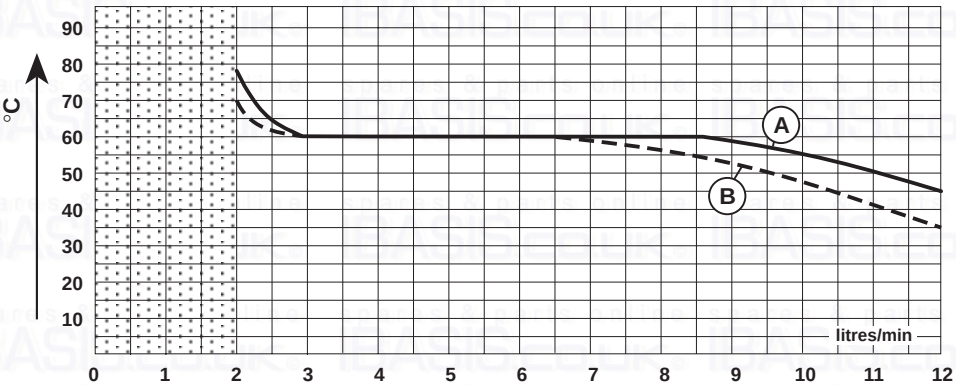

Fig. 2

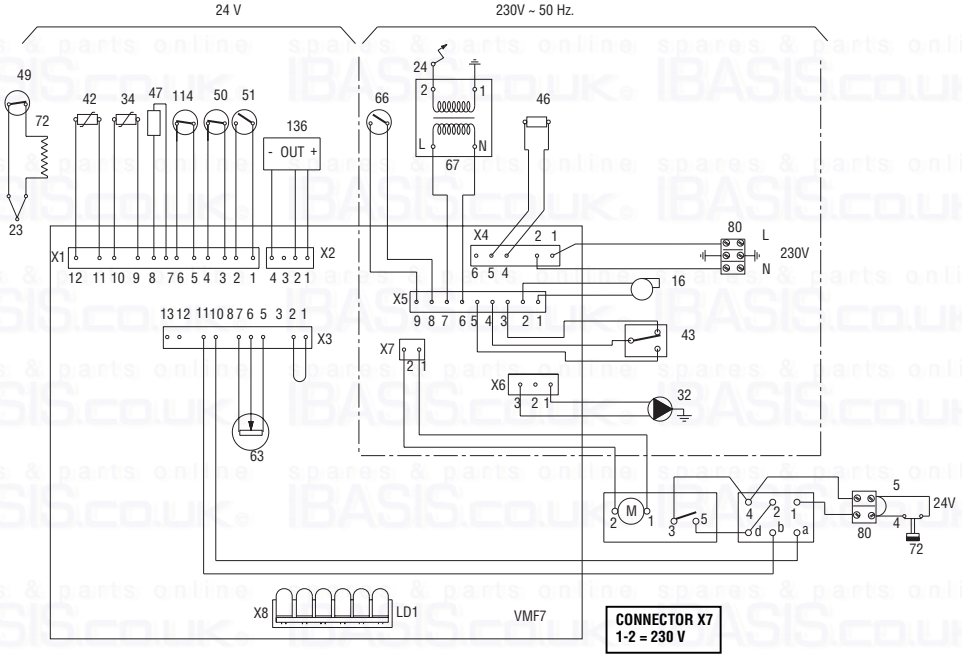

Key

16 Fan
23 Thermocouple
24 spark electrode
31 Air pressure control damper
32 Central heating pump
34 C.H. flow temperature sensor
42 D.H.W. temperatuure sensor
43 Air pressure switch
46 Operator gas valve
47 Modulating regulator (Modureg) gas valve
49 Overheat cut-off thermostat
50 Heat exchan. limit thermostat
51 Heat exchan. frost thermostat
60 Extended control knob gas valve
61 C.H. selector switch
62 Time clock
63 C.H. boiler thermostat
66 Microswitch combination gas valve
67 Ignition transformer
68 Control box with P.C.B.
72 Room thermostat (not fitted)
80 240V + 24V roomstat terminal blocks
114 Low water pressure switch
136 Flowmeter
145 C.H. pressure gauges

CONNECTOR X2	CONNECTOR X3
A D.H.W. FLOW-SWITCH (ON-OFF) CAN BE CONNECTED TO TERMINALS 1 AND 3	SHORT CIRCUIT 12-13 - BOILER STARTS FOR C.H. - WAITING TIME IS EXCLUDED - MAX BURNER PRESSURE C.H. CAN BE CHEDKED/SET WITH P1

JP1 - JP4 Jumper links on **P.C.B.**
JP1 Is not required
JP4 Must be fitted

P1 = C.H. max. output
P2 = D.H.W. temperature (factory set)

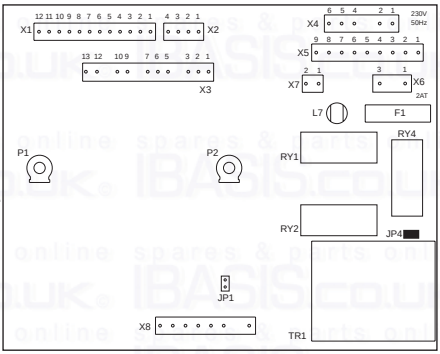

General Notes - For use on the OPTIMA 901 fitted with VMF7 Printed Circuit Board

*The pilot light can only be ignited after the Fan (16) has run for at least 20 seconds on full speed.
*The central heating pump (32) will run to disperse heat if the temperature at the heat exchanger limit thermostat (50) is too high
*The frost thermostat (51) will switch on the boiler for central heating if the temperature is too low.
*Fuse on P.C.B.: 2 Amp.

Jumpers JP1 - JP4		
	Fitted	**Not fitted**
JP1	No waiting time	Waiting time on
JP4	Fan control High & Low speed	Fan control High speed only/off

LED n°	signification:
1	Mains on/low voltage on
2	Flowmeter (136) on
3	Central heating room thermostat (72) / clock (62) calling
4	Sensor (34) or (42) calling for heat
5	Central Heating waiting time, max. 3 minutes delay following shut off
	Boilerstat (63), Clock (62), Roomstat (72) or use of Hot Water
6	Demand for heat - relay (RY2) will be energised
7	Air pressure switch (43) on, air flow checked

Temp. sensor	temp.	Ohm
	10° C	890 ohm
	25° C	1000 ohm
	60° C	1300 ohm
	80°C	1490 ohm

RY not energised

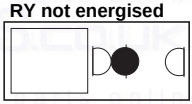

RELAY RY	
RY1	central heating pump
RY2	on/off relay
RY3	-
RY4	fan

RY energised

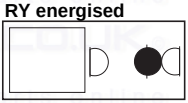

Note

If RY1 is not energised the Central Heating pump will run

Check operation using LED's as a fault finding guide. First check section A, then B, then C, then D.
0 = LED off 1 = LED on x = LED either on/off is not important

A — Domestic Hot water tap open (Flow rate greater than 2,5 l/min)

LED	OK	FAULT	POSSIBLE CAUSE OF FAULT
1	1	0	No mains electricity/switches off/fuse blown.
2	1	0	D.H.W. flowmeter (136) not operating.
3	X	X	Not required for D.H.W.
4	1	0	- D.H.W. sensor (42) not connected or D.H.W. temperature too high
5	0	1	- Waiting time operating: replace P.C.B.
6	1	0	Short circuit on D.H.W. sensor (42) or resistance lower than 500 Ohm
			- C.H. limit thermostat (50) open circuit (pump run)
			- C.H. water pressure low (114 open circuit)

B — CENTRAL HEATING ON Room stat (72) at Max, HW tap closed

LED	OK	FAULT	POSSIBLE CAUSE OF FAULT
1	1	0	No main electricity/switches off, fuse blown.
2	0	1	Hot water tap open - D.H.W. flowmeter (136) contact closed
3	1	0	Roomstat (72) or clock (62) not calling for heat
4	1	0	- Central heating sensor (34) not connected or
			- boiler temperature too high or
			- boiler thermostat (61) below CH temperature
5	0	1	Waiting time still operating (max. 3 minutes)
6	1	0	- C.H. sensor (34) short circuit or resistance lower than 500 ohm
			- C.H. limit thermostat (50) open circuit (pump will run)
			- C.H. water pressure low (114 open circuit)

C — GENERAL TEST FOR D.H.W. AND CENTRAL HEATING (First check A and B above)

LED/REL.	OK	FAULT	POSSIBLE CAUSE OF FAULT
RY2	energised	not energised	Check first A and B above
RY4	energised	not energised	Air pressure switch (43) not in NC position or miswired:
			- check wiring
			- fan (16) at low speed remove jumper JP4
7	1	0	- fan (16) not running at full speed or
			- air flow too low:
			- air pressure switch (43) faulty

D — IGNITION OF PILOT

1	Fan (16) should run at full speed for at least 20 seconds	4	Microwitch (66) will close
	(open hot tap or set controls so boiler is callingfor heat).	5	Ignition transformer (67) will energise
2	Check first A, B and C above	6	Check spark and position of spark electrode (24)
3	Push ignition button (60) fully in		

Special Installation Possibilities: Two-pipe air intake/flue outlet

Special Air Intake/Flue Outlet

The standard Flue/air intake hood on top of the boiler can be replaced by a special two pipe flue adapter.

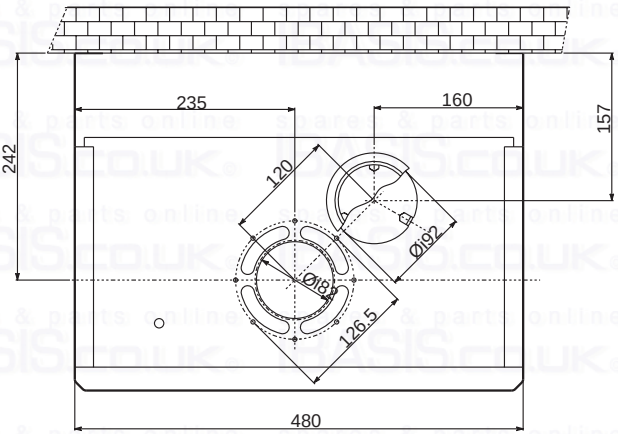

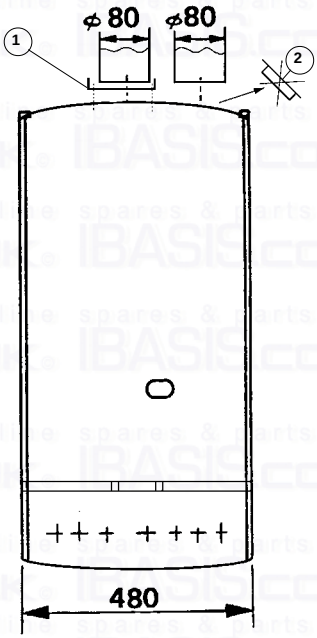

① = Special two pipe flue adapter 823071

② = remove air intake cover Ø 80 mm

Phone numbers:

Installer _____

Service Engineer _____

Cod. 3540248/2 - 04/98

BECAUSE OF OUR CONSTANT ENDEAVOUR FOR IMPROVEMENT DETAILS MAY VARY SLIGHTLY FROM THOSE QUOTED IN THESE INSTRUCTIONS.

ALL SPECIFICATIONS SUBJECT TO CHANGE

Stockton Close, Minworth Industrial Park, Minworth, Sutton Coldfield, West Midlands B76 8DH
Tel.: 0121/3523500 - Fax 0121/3523510

spares & parts online IBASIS.CO.UK