FERROLI S.p.A.

SYS 10-23

Wall-Hung, Gas-Fired, System Boiler, for Central Heating

INSTALLATION, MAINTENANCE AND USER INSTRUCTIONS

cod. 3544570/0 - 02/2004

FERROLI

IMPORTANT

Your "benchmark" Installation, Commissioning and Service Record Log Book will be enclosed in your customer information pack. "This record must be completed and left with the end user"

"All CORGI Registered Installers carry a CORGI ID card and have a registration number. Both should be recorded in your central heating log book. You can check with the CORGI registered by calling CORGI on 01256 372300".

- Carefully read the warnings in this instruction booklet, as they provide important indications on the safety of installation, operation and maintenance.
- The instruction booklet is an integral and essential part of the product and must be kept safely by the user for future reference.
- If the appliance is sold or transferred to another owner, or if it is moved, always check that the booklet accompanies the boiler for reference by the new owner and/or installer.
- The installation and maintenance operations must be performed according to the standards in force, the instructions of the manufacturer and must be carried out by professionally qualified personnel.
- Incorrect installation or poor maintenance may cause a damager to persons or property. The manufacturer declines all liability for damage deriving from errors in the installation and maintenance of the appliance, and where there is a failure to observe the instructions provided by the manufacturer.
- Before performing any cleaning or maintenance operations, disconnect the appliance from the mains power supply using the main switched fused spur.
- In the event of faults and/or poor operation of the appliance, it should be isolated. Do not attempt to repair the appliance. Contact professionally qualified personnel only at ferroli caresafe.
- The products must only be repaired-replaced by professionally qualified personnel, using original spare parts only. Failure to heed this warning may affect the safety of the appliance.
- To ensure the correct operation of the appliance, annual maintenance must be performed by qualified personnel.
- This appliance must only be used for the purposes it has specifically been designed for. All other uses are considered improper and thus dangerous.
- After having removed the packaging, check that the contents are intact.
- The parts of the packaging must not be left within the reach of children, as they are potential sources of danger.
- In case of doubt do not use the appliance and contact your supplier.

This symbol indicates **"Warning"** and is placed near all warnings regarding safety. Such provisions must be strictly adhered to so as to avoid danger and damage to persons and property.

This symbol highlights a note or an important warning.

Certification

The CE Mark attests that Ferroli gas-fired appliances conform to the requirements specified in the corresponding European directives.

In particular, this appliance conforms to the following EEC directives:

- Directive 90/396, Gas Appliances,
- Directive 92/42, Efficiency,
- Directive 73/23, Low Voltage, (amended by no. 93/68)
- Directive 89/336, Electromagnetic Compatibility (amended by no. 93/68)

1. Operating/user instructions 4
1.1 Introduction.....4
1.2 Control panel 5
1.3 Ignition and shut-down 5
1.4 Settings 6
1.5 Maintenance.....6

2. INSTALLATION 7
2.1 General instructions.....7
2.2 Siting of appliance. 7
2.3 Water connections 9
2.4 Gas connection 11
2.5 Electrical connections 11
2.6 Flues connections 14

3. SERVICE AND MAINTENANCE.....20
3.1 Settings 20
3.2 Commissioning.....21
3.3 Maintenance.....22
3.4 Replacement of Parts.....24

4. CHARACTERISTICS AND TECHNICAL SPECIFICATIONS 28
4.1 Dimensions and fittings 28
4.2 Overall view and main components 29
4.3 Hydraulic diagram.....30
4.4 Technical data table 31
4.5 Diagrams 32
4.6 Internal electrical diagrams.....33
4.7 Fault finding 35

1. OPERATING/USER INSTRUCTIONS

1.1 Introduction

Dear Customer,
Thank you for having chosen the **SYS 10-23**, an advanced-concept FERROLI wall-hung boiler featuring cutting-edge technology, high reliability and constructional quality. Please carefully read this manual and leave it with the end user.
The **SYS 10-23** is a **high efficiency** heat generator for central heating systems, operating on natural gas or LPG.
The boiler can be connected to an external hot water cylinder for the production of domestic hot water, via a "Y" or "S" plan type system.
The boiler body is made up of a **copper heat exchanger**, the special design of which guarantees high heat exchange efficiency in all operating conditions, and **an atmospheric burner** featuring electronic ignition with ionisation flame control.
The boiler is completely **sealed** from the surrounding environment: the air required for combustion is taken in from the outside, and a fan is used to expel the flue gases. The accessories supplied with the boiler also include a variable-speed pump, expansion vessel, safety valve, air pressure switch, boiler thermostat, pump overrun and safety thermostat.
The user simply has to set the temperature required inside the home (using the optional, yet recommended room thermostat) or set the system temperature and the required domestic hot water outlet temperature at the cylinder stat. The regulation and control system will then ensure optimum operation all year round.
NOTE. External controls not supplied with the boiler.

spares & parts online IBASIS.CO.UK

1.2 Control panel

To access the control panel, open the drop down cover.

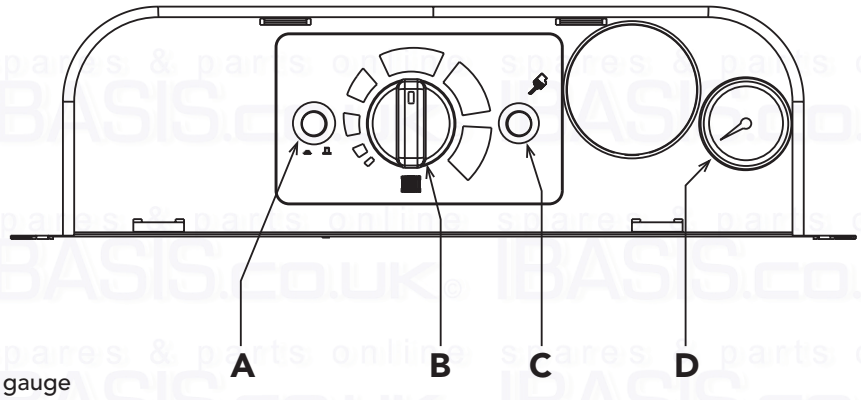

A	On /OFF switch
B	CH boiler thermostat
C	Reset knob with lamp
D	Central heating pressure gauge

fig. 1

1.3 Ignition and shut-down

Ignition

- Open the gas cock of the boiler.
- Purge the gas supply of any air upstream of the gas valve.
- Turn on the main switched spur to the boiler.
- Press the boiler switch to on.
- Rotate the C.H. temperature adjustment knob above Min position.
- Check the external controls are calling for heat, i.e clock and room thermostat.
- At this point, the burner ignites and the boiler starts to function automatically, operated by its control and safety devices.

If after completing the start-up procedure correctly, the burner fails to ignite and the boiler shut down warning lights up, wait about 15 seconds then press the reset switch. The reset electronic control unit will repeat the start-up cycle. If after a second attempt the burners still fails to ignite, consult the paragraph "Troubleshooting".
If there is a power failure while the boiler is in operation, the burners automatically go out and re-ignite when the power returns.

If the system is filled with very cold water, the boiler will automatically light due to the frost thermostat sensing the low temperature. The boiler will not shut down, until the water temperature reaches 10°C.

Shut-down

Close the gas isolation valve , push the button "A" to OFF and disconnect the appliance from the mains power supply.

When the boiler power is off the boiler anti-freeze protection is not active.
For extended periods of inactivity during the winter months, and in order to avoid damage due to freezing, all the water should be drained from the boiler; alternatively, place approved antifreeze fluid in the central heating system.

1.4 Settings

Setting the ambient temperature (using the optional room thermostat)

Set, using the room thermostat, the temperature required inside the rooms. Based on the demand from the room thermostat, the boiler is ignited and heats the system water to the set central heating outlet temperature. When the required temperature inside the rooms is reached, the boiler switches off. A room thermostat must be used as per the building regulations 'Part L' this will maintain the system at the set central heating outlet temperature and ensure maximum efficiency.

System water pressure control

Using the filling loop and with the system cold top up the water pressure to approximately 1bar. Once the operation is completed, always close the filling loop. This device is fitted to the system by the installer on the central heating return pipework.

1.5 Maintenance

It is recommended to have annual service of the appliance performed by qualified personnel. Please refer to Chap. 3.3 in this manual for further information.
The casing, the control panel and the aesthetic parts of the boiler can be cleaned using a soft and damp cloth, dipped in soapy water if necessary. Do not use abrasive detergents or solvents.

spares & parts online IBASIS.CO.UK

2. INSTALLATION

2.1 General instructions

This appliance must only be used for the purposes it has been specifically designed for. This appliance is used to heat water to below boiling temperature at atmospheric pressure and must be connected to a central heating and/or hot warm distribution system, according to its characteristics, performance and heating capacity. All other uses are considered improper.

THE BOILER MUST ONLY BE INSTALLED BY SPECIALIST AND QUALIFIED PERSONNEL, IN COMPLETE COMPLIANCE WITH ALL THE INSTRUCTIONS REPORTED IN THIS TECHNICAL MANUAL, THE LEGAL STANDARDS IN FORCE, THE PRESCRIPTIONS OF STANDARDS AND ANY LOCAL STANDARDS, AND ACCORDING TO THE RULES OF GOOD PRACTICE.

Incorrect installation may cause injury or damager to persons and property. The manufacturer will not be held liable in such events.

This appliance must be installed strictly in accordance with these instructions.

The Gas Safety Regulations (Installations & Use).
The Local Building Regulations.
The Building Regulations.
The Buildings Standards (Scotland - Consolidated) Regulations.
British gas publication DM2 - Guide for installation in timber framed housing.

British Standards Codes of Practice:

B.S.	7593		TREATMENT OF WATER IN DOMESTIC HOT WATER CENTRAL HEATING SYSTEMS
B.S.	5546		INSTALLATION OF HOT WATER SUPPLIES FOR DOMESTIC PURPOSES
B.S.	5440	Part 1	FLUES
B.S.	5440	Part 2	AIR SUPPLY
B.S.	5449		FORCED CIRCULATION HOT WATER SYSTEMS
B.S.	6798		INSTALLATION OF GAS FIRED HOT WATER BOILERS
B.S.	6891		GAS INSTALLATIONS
B.S.	7671		IEE WIRING REGULATIONS
B.S.	4814		SPECIFICATION FOR EXPANSION VESSELS
B.S.	5482		INSTALLATION OF LPG

Model Water Bye Laws

For Northern Ireland the rules in force apply

2.2 Siting of appliance.

The appliance's combustion chamber is sealed from the surrounding environment and as a result the appliance may be installed in any room without purpose built ventilation. The installation environment must nonetheless feature sufficient ventilation, to avoid dangerous conditions arising in the event of even minor gas leaks. These safety standards are imposed by EEC Directive no. 09/396 for all gas appliances, including the so-called sealed appliances.

The place of installation must in any case be free of dust, inflammable objects or materials and corrosive gases. The environment must be dry and not prone to freezing.

The boiler is supplied ready for wall-hung installation. The rear frame of the appliance has a series of slots for fastening it to the wall, using screws with wall plugs. The fastening to the wall must provide stable and effective support of the appliance.

The boiler must be fastened to a closed part of wall, which is free of apertures or holes behind the frame of the boiler that may allow the internal components of the boiler to be reached.

If the appliance is enclosed in a cabinet or alongside another appliance, minimum clearances must be adhered to. Fig. 2 and Tab. 3 show the minimum and recommended space to be left free around the appliance.

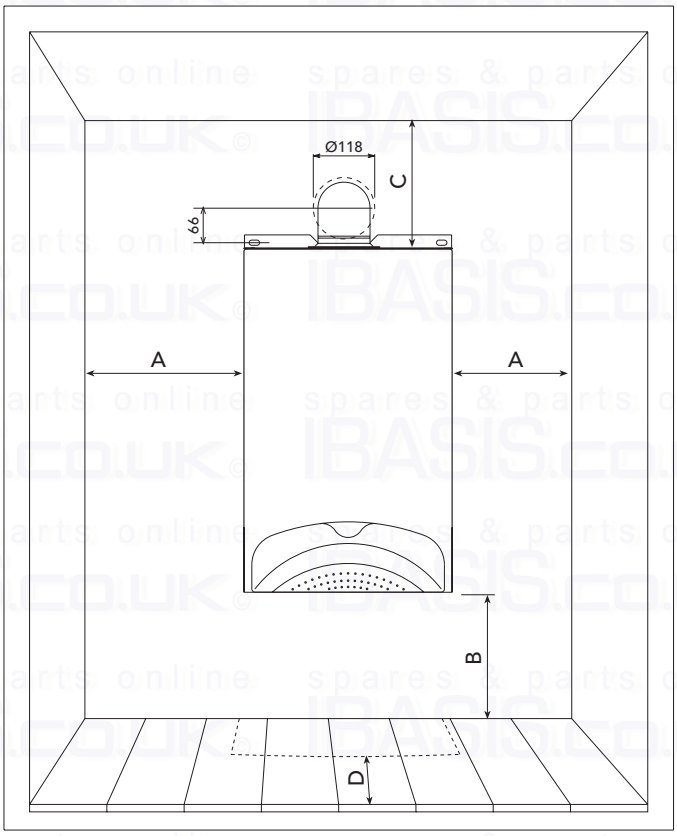

Table 3		
	Minimum	**Recommended**
A	30 mm	150 mm
B	200 mm	300 mm
C	280 mm	300 mm
D	15 mm (from opening panels)	> *600 mm

NOTE: Minimum distance required from front panel of the appliance for servicing 600mm (D)

fig. 2

Fixing to the wall

Select suitable mounting position for boiler. Using the template mark flue outlet and boiler mounting points. Drill two 10mm holes 90mm deep to accept the wall plugs. Fit two special wall plugs in the wall as described in the fig. 3. Fasten the wall bracket to the wall using an antitheft nut on the right side and a standard nut (M8) on the left side. Using a core drill cut a 118mm diameter hole for the flue. Mount the boiler on the wall bracket and fix using an antitheft nut on the left side and a standard nut (M8) on the right side.

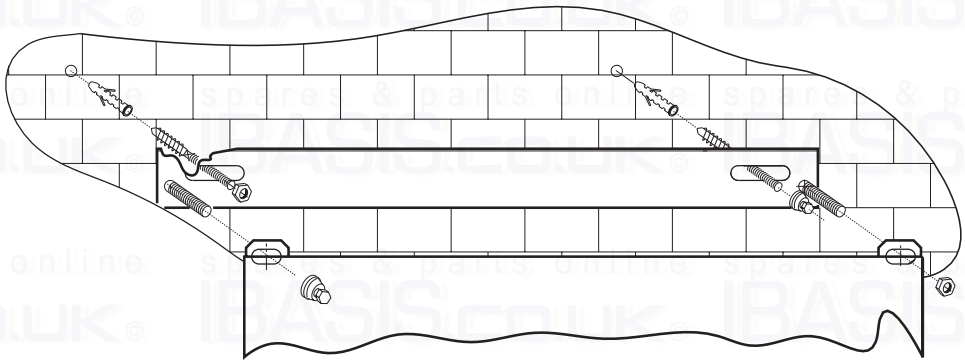

fig. 3

2.3 Water connections

The heat capacity of the appliance should be established in advance by calculating the heating requirements of the building according to the standards in force. For correct operation and long-life of the boiler, the hydraulic system must be suitably proportioned and always fitted with all the accessories that guarantee correct operation.
In the case where the central heating outlet and inlet pipes follow paths whereby, at some points, pockets of air may form, air vent valves should be installed at such points.
In addition, a drain device should be installed at the lowest point in the system, to allow complete draining.
If the boiler is installed at a lower level than the system, a flow-return valve should be fitted to prevent the natural circulation of water in the system.
The temperature differential between the outlet and the inlet of the boiler should not exceed 20°C. (11°C recommended)

Do not use the water pipes as the earth for electrical appliances.

Before installation, carefully clean all the pipes in the system to remove any residues or impurities that may affect the correct operation of the appliance.
Make the connections to the corresponding fittings, as shown in fig. 4.

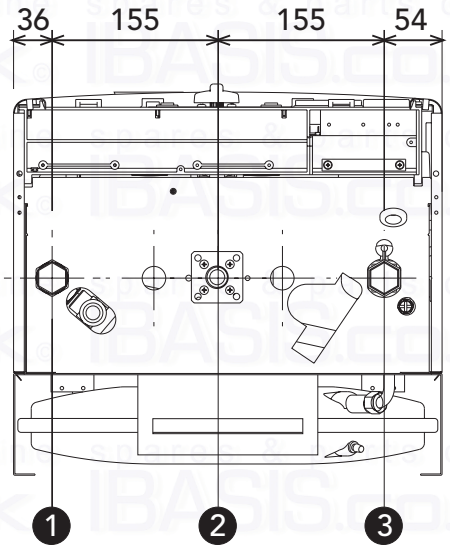

Key

1 Central heating outlet, 3/4" (22 mm with isolation valve fitted)
2 Gas inlet, 1/2" (22 mm with isolation valve fitted)
3 Central heating inlet, 3/4" (22 mm with isolation valve fitted)

fig. 4

It is essential to fit the supplied isolation valves between the boiler and the central heating system; these allow the boiler to be isolated from the heating system, if necessary.

The discharge of any safety valves must be routed to outside dicharging to ground level 100 mm from the floor so as not to create a danger to anyone passing, there should be no rise from the boiler to outside a slight fall is preffered. The manufacturer of the boiler will not be held liable if this warning is not heeded. Make the connections to the boiler in a way that its internal pipework is not subject to stress.

Make Up Water

Provision must be made for replacing water lost from the sealed system. Reference should be made to BS6798, for methods of filling and making up sealed systems. There must be no direct connection between the boiler's central heating system and the mains water supply. The use of mains water to charge and pressurise the system directly, is conditional upon the Local Water Byelaws. Again any such connection must be disconnected after use. The supplied temporary filling loop is shown in fig. 4. Ensure the filling point is on the return pipe to the boiler.

Attention - is drawn to the Model Water Byelaws.

Fittings manufactured from duplex (alpha-beta) brass are not acceptable for underground use and certain water undertakings will not accept their use above ground.

Key

1. Filling point C.H.
2. Temporary connection
3. Cold water supply
4. Double check valve

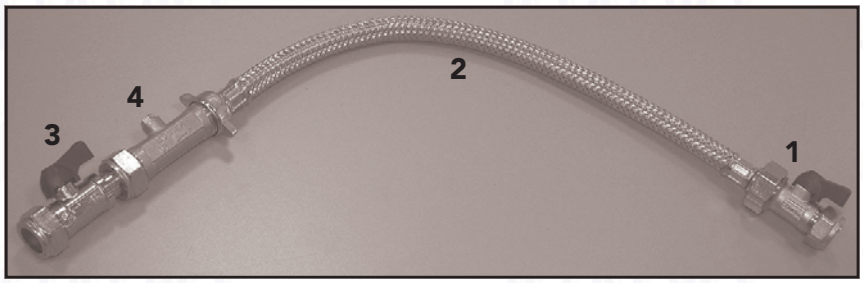

Fig. 5

Water treatment

if water treatment is used Ferroli Ltd recommend only the use of Fernox or Sentinel water treatment products, which must be used in accordance with the manufacturers instructions. For further information contact:

Fernox Manufacturing Co. LTD.
Cookson electronics, forsyth road
Sheerwater, working Surrey GU21 5RZ
Tel. 0870 8700362

Sentinel Division
Betz Dearborn LTD
Widnes, Cheshire WA8 5351
Tel. 0151 424 5351

Note - If the boiler is installed in an existing system any unsuitable additives must be removed by thorough cleansing.
All systems should be cleansed according to B.S. 7593.

Note - In hard water areas treatment to prevent lime scale may be necessary.

Note - It is important that the correct concentration of the water treatment product is maintained in accordance with the manufactures instructions.

Filling the boiler and the system

The filling pressure, when the system is cold, must be around 1 bar (at least 0.5 bar). If the pressure drops during operation to a value lower than the minimum described above, the User must restore the initial value using the filling loop. For correct boiler operation, the pressure, when hot, must be around 1,5-2 bar. Once the operation is completed, always close the filling loop. This device is fitted to the system by the installer.

2.4 Gas connection

Before making the connections, check that the appliance is configured for operation with the type of fuel available, and carefully clean all the gas pipes in the system, to remove any residues that may affect the correct operation of the boiler.

The gas connections must be made using the relative coupling (see fig. 4), according to the standards in force, with a rigid metal pipe, fitting a gas cock between the system and the boiler. Check that all the gas connections for soundness.

The capacity of the gas meter must be sufficient for the simultaneous use of all the connected appliances.

The diameter of the gas pipe, which leaves the boiler, does not necessarily determine the choice of the diameter of the pipe used between the appliance and the gas meter; this must be chosen according to its length and the pressure drop, according to the standards in force.

Do not use the gas pipes as the earth for electrical appliances.

2.5 Electrical connections

Connection to the mains power supply

The boiler should be connected to a single-phase, 230 Volt-50 Hz electrical power supply.

The electrical safety of the appliance is ensured only when the appliance is correctly connected to an effective earth system, as prescribed by the safety standards in force. Have professionally qualified personnel check the efficiency and the rating of the earth system. The manufacturer is not liable for any damage caused by the appliance not being correctly earthed. In addition, make sure that the electrical system is adequately rated for the maximum power absorbed by the appliance, indicated on the boiler rating plate, and in particular that the cross-section of the wires is suitable for the power absorbed by the appliance.

The boiler is pre-wired and fitted with a cable for connection to the electrical line. The connections to the mains supply must be made using a fixed connection, featuring a double-pole switch with a contact opening of at least 3 mm. Max 3A fuses must be installed between the boiler and the line. The correct polarity must be followed (LINE: brown wire / NEUTRAL: blue wire / EARTH: yellow-green wire) in the electrical connections.

The appliance's power cable must not be replaced by the user. In the event where the cable is damaged, turn off the appliance and contact professionally qualified personnel to replace it. If replacing the electrical power cable.

All wiring must conform to current I.E.E. Regulations

Accessing the electrical terminal block

Follow the operation shown in Figs. 6a and 6b to access the electrical terminal block. The layout of the terminals for the various connections is shown in the wiring diagram, in the chapter on Technical Specifications.

Fig. 6a

Fig. 6b

Room thermostat

WARNING: THE ROOM THERMOSTAT MUST HAVE 230V LIVE CONTACTS.

Standard Systems

For a general pipe layout and wiring diagram on the "S" and "Y" plan systems please see fig. 7a, 7b, and 8a, 8b.

SYS "S" Plan

Pipe layout

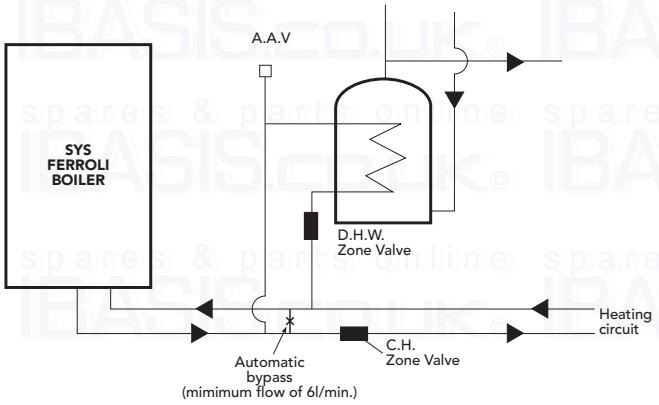

Fig. 7a

Wiring diagram

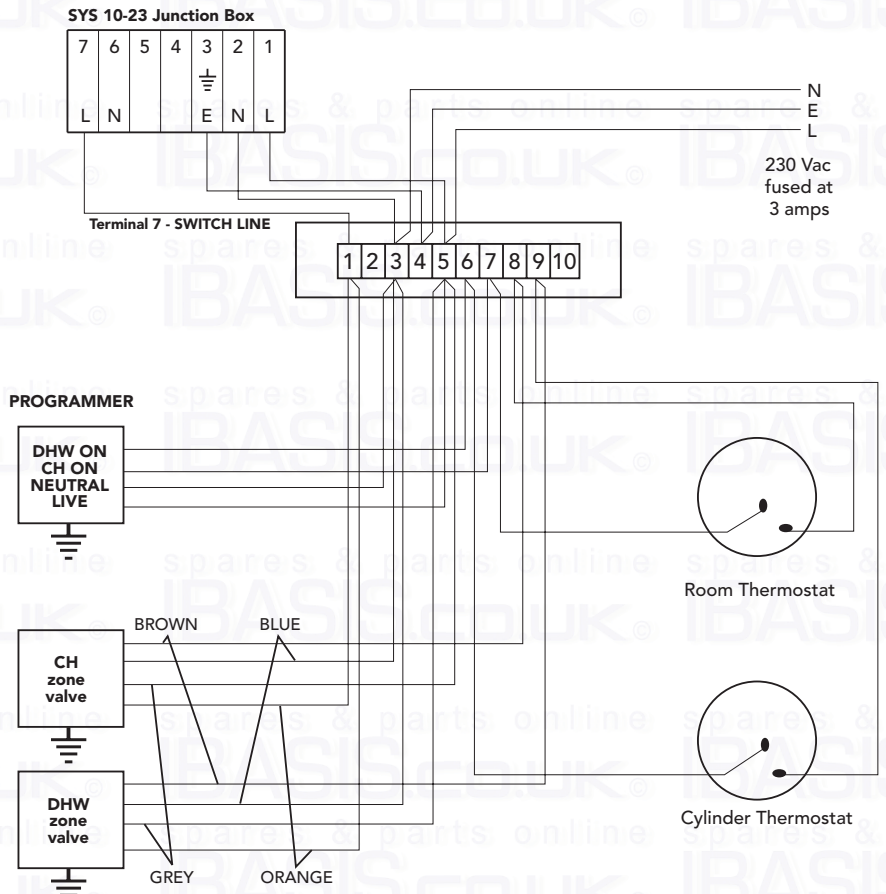

Fig. 7b

SYS "Y" Plan

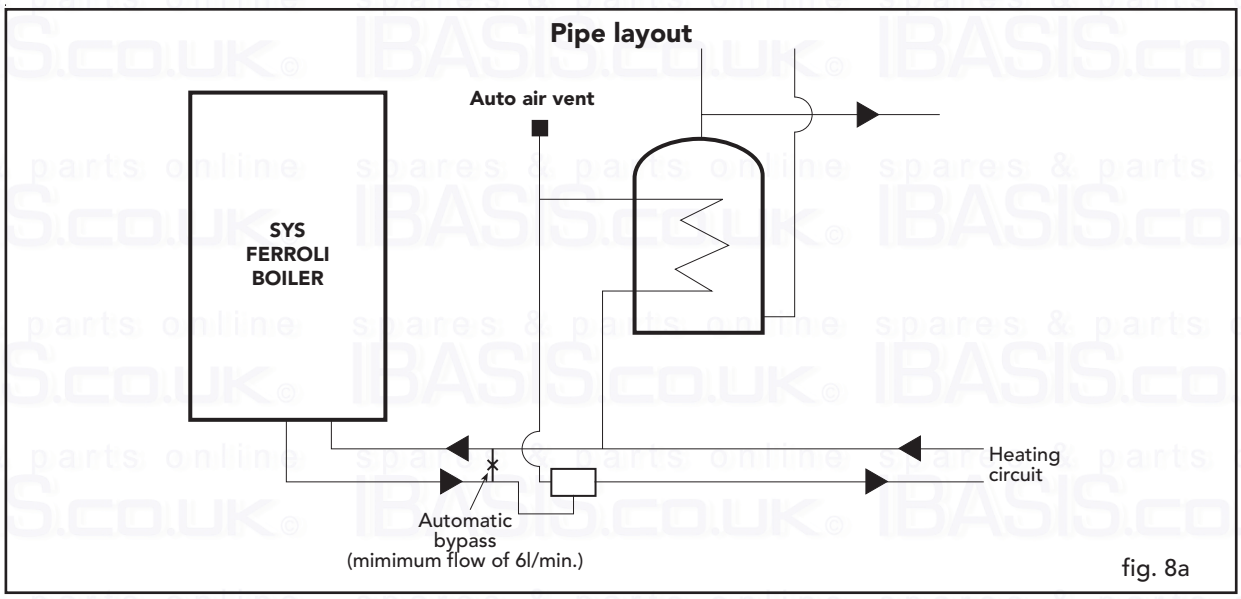

fig. 8a

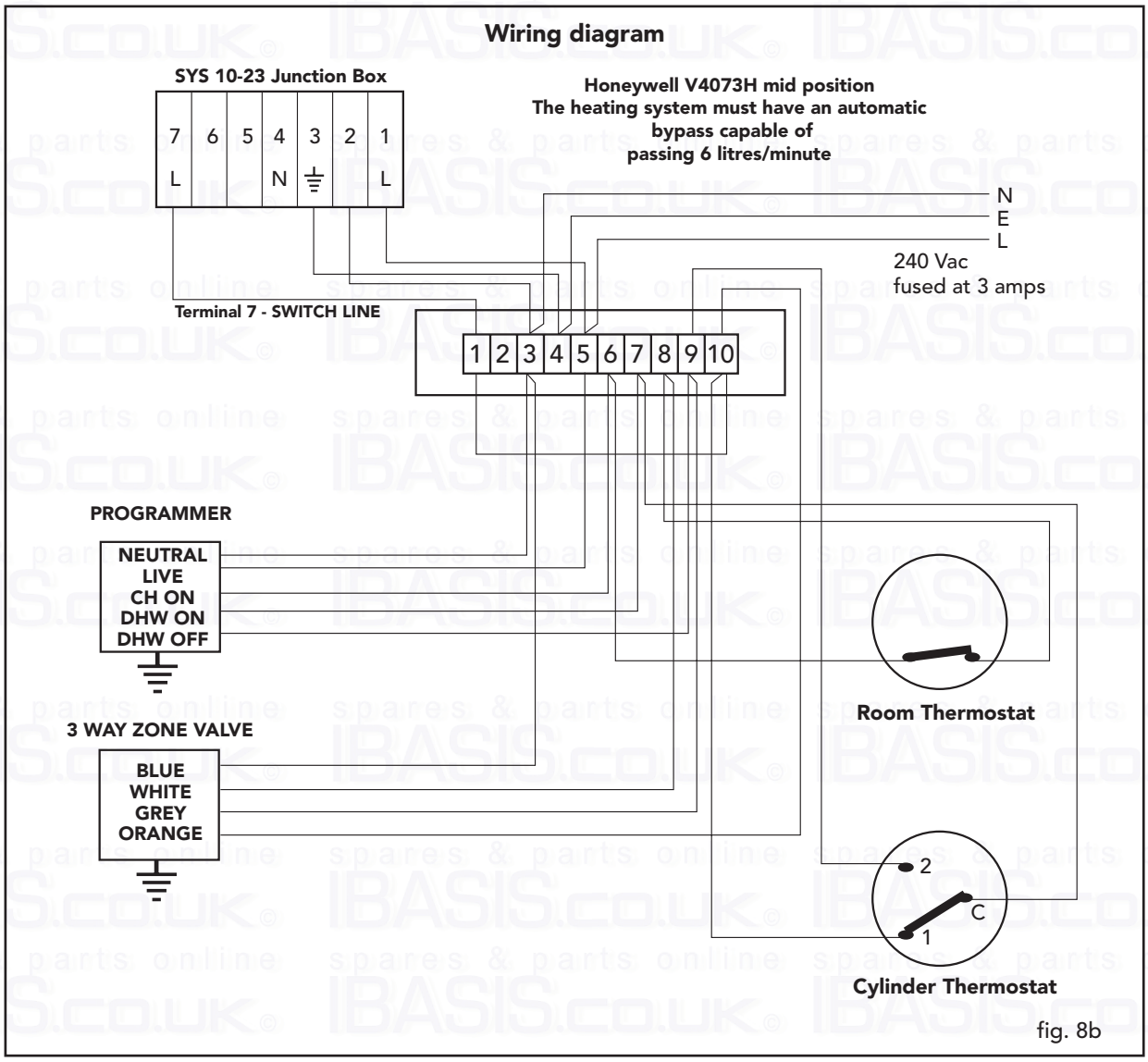

fig. 8b

2.6 Flues connections

This is a "type C" **sealed** and forced draught appliance, and as such the air inlet and flue gas outlet must be connected to one of the exhaust/intake systems indicated below. Using the tables and the methods of calculation described, first verify, before installation, that the flues do not exceed the maximum allowed length. The standards in force and local legislation must be adhered to for terminal positions.

Restrictors

For the correct operation of the boiler, the restrictors supplied with the appliance must be fitted, according to the indications shown in the tables below. These tables apply for both vertical and horizontal applications.

Choice of the restrictors using concentric flue

Table 4a

Type	Length up to:	Restrictor to be used
60/100	1 bend + 1 metre	50 mm
	1 bend + 3 metres	No restrictor
80/125	1 bend + 3 metres	45 mm
	1 bend + 4 metres	50 mm
	1 bend + 5 metres	No restrictor

Choice of the restrictors using 2 pipe system

Table 4b

Total calculated flue lenght		Use restrictor size
Minimum	Maximum	mm
0 m	10 m	45 m
10 m	20 m	47 m
20 m	35 m	50 m
35 m	45 m	No restrictor

Replacing the restrictor

To install or change the restrictor, remove the fan unit, remove the flue gas connecting pipe 1 (as shown in Fig. 9a) and insert the restrictor 2 (as shown in Fig. 9b).

N.B: The diameter of the hole is stamped on the restrictor

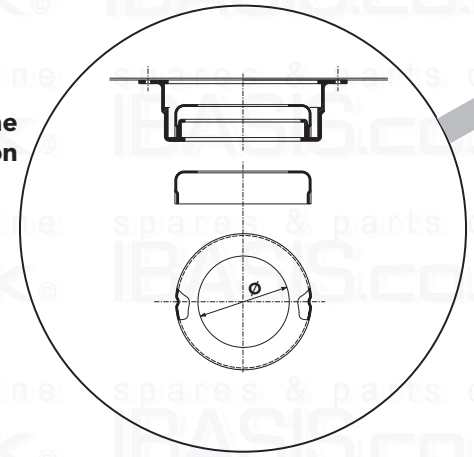

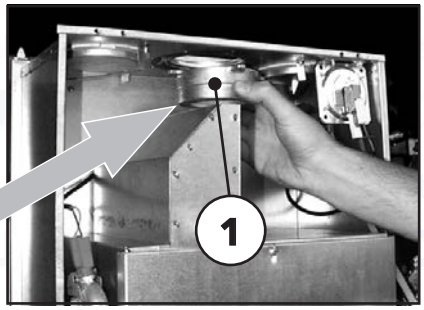

fig. 9a

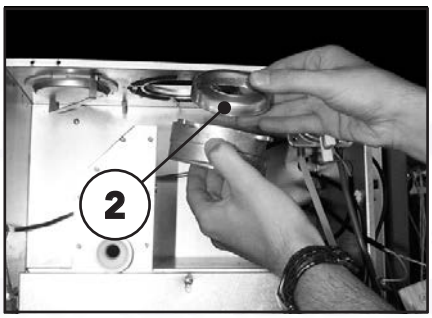

fig. 9b

The Ø45 SYS restrictor is fitted as standard on the boilers. Before inserting the flue gas outlet pipe, check that the correct restrictor is installed (when this needs to be used) and correctly positioned.

Connection using concentric flue

For side outlet or roof outlet concentric air/flue gas pipe can be connected directly to the top of the boiler. Numerous accessories are available upon request for the various different installation requirements. Please refer to the flue accessories catalogue, or the price list.

Standard flue kit 1KWMA07Y

Side Outlet

Front view

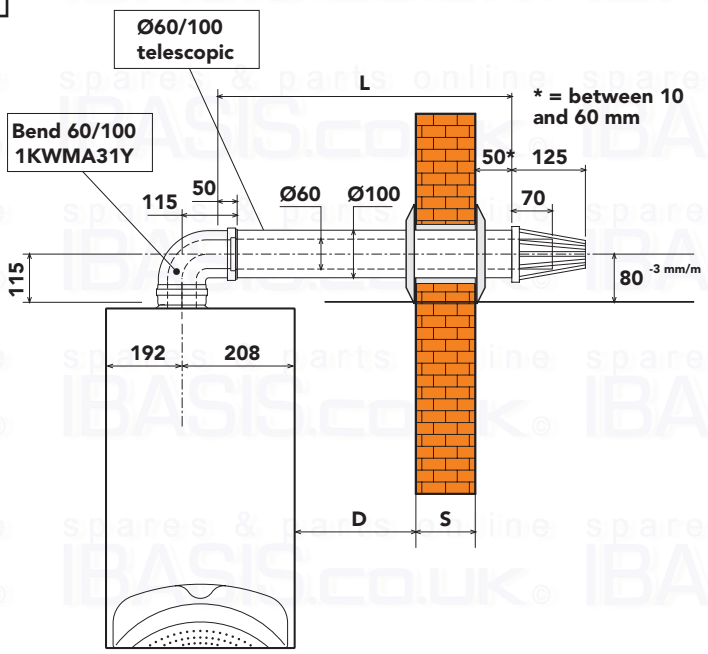

L = Telescopic section adjustment: max 840mm min 540mm

Right hand
L = S + D + 263 mm

Rear hand
L = S + 181 mm

Rear view

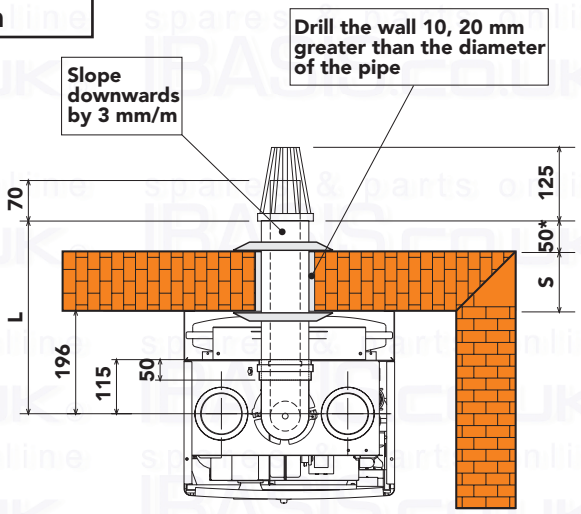

fig. 10

The total length in linear metres of the concentric pipes must not exceed the maximum length indicated in the table below, considering that each bend gives rise to the reduction indicated. For example, a 60/100 pipe with 1 x 90° bend + 1 metre horizontal + 2 x 45° bends + 1 metre horizontal, has a total equivalent length of 4 metres.

Maximum flue lenght permissible	Vertical	Horizontal*
100 mm concentric	4 m	3 m
125 mm concentric	5 m	

* For horizontal Flueing the reduction for appliance bend or turret are already included.

Reduction for bend	
100 mm concentric bend 90°	1 m
100 mm concentric bend 45°	0,5 m
125 mm concentric bend 90°	0,5 m
125 mm concentric bend 45°	0,25 m

For installation (top flue connection):

1. Define the position for the installation of the appliance
2. Drill the wall for the passage of the air/flue gas pipe according to the references indicated in the figure, considering that the horizontal sections of pipe must have a downwards slope of around 3 mm per metre of length, to prevent any rainwater from entering the boiler.
3. Make a hole that is 10 - 20 mm greater in diameter than the rated diameter of the concentric pipe used, to simplify its installation.
4. If necessary, cut the end of the pipes to required measurement, remembering that the outside part of the pipes must protrude from the wall by between 10 and 60 mm. Eliminate any burrs from the cut.
5. Connect the pipes to the boiler, positioning the seals correctly.

Vertical outlet

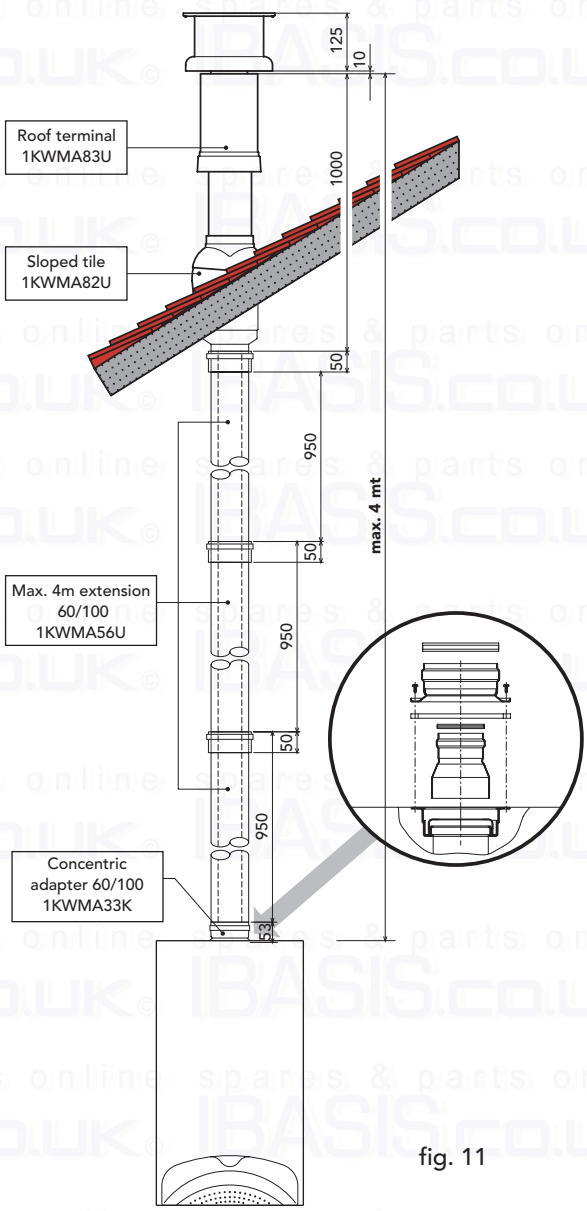

fig. 11

vertical flueing installation notes

The installation of a concentric vertical flue can be carried out as follows.
Install the appliance as previously mentioned in this manual.

1. Connect onto the flue assembly at the top of the appliance a concentric vertical adaptor part number 1KWMA33K, it is very important to esure the correct size restrictor ring is fitted if required (see page 14 for restrictor ring sizing and equivalent flue leghts).
2. Using the required amount of 1mtr flue extensions (part number 1KWMA56U) inserting them spigot down ensuring the seals are well lubricated with silicone grease (not supplied) and correctly located
3. If required 45° bends (part number 1KWMA64A) may be used with a resistance value of 0.5mtrs each, the flue should be routed in such away to avoid any unnecessary devition and thus minimise the amount of bends required.
4. The termination should be made through our concentric flue outlet (part number 1KWMA83U) in conjunction with a roof slate pitched (part number 1KWMA82U) flat roof (part number 1KWMA81U).
5. All flue installations must comply with BS5440 part 1 and must only be of Fèrroli manufacture. The vertical flue must continually rise and be supported throughout its lenght.
   The flue must be inspected whilst commissioning the appliance to esure it is sound throughout it length.

Connection using two pipe system

The appliance may be connected to a system of separate air/flue gas pipes with wall or roof outlet, as shown in drawings 12 to the side. Numerous accessories are available upon request for the various different installation requirements. The most frequently-used components are shown in Tables 7 - 8 - 9. Please refer to the flue accessories catalogue or the price list for other components.
To check that the maximum allowed length of the pipes is not exceeded, a simple calculation must be performed before installation:

1. For each component, Tables 7 - 8 - 9 list a pressure drop in "equivalent air-metres", depending on the position of installation of the component itself (air intake or flue gas outlet, vertical or horizontal). This drop is called "equivalent air-metres" as it relates to the pressure drop of one metre of air intake pipe (defined as being equal to 1). For example, a 90° bend in a Ø80 flue gas outlet has a pressure drop equivalent to 2.5 air-metres, that is, equal to 2.5 linear metres of air intake pipe.

2. Once having completely defined the layout of the two pipe flue system, add the pressure drops in equivalent-metres, according to the position of installation of all the components and accessories in the system.

3. Check that the total pressure drop calculated is less than or equal to **45 equivalent metres**, that is, the maximum allowable for this model of boiler.

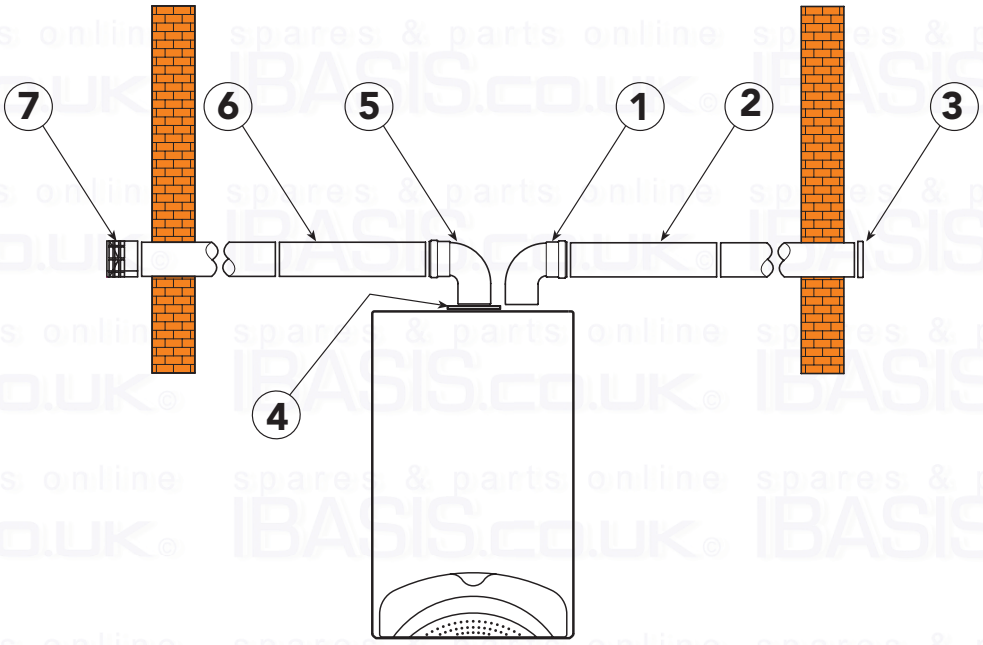

fig. 12

Table 6

Ref.	N° Pieces	Description	Equivalente pressure drop
1	1	Air bend Ø80 R/D = 0,75	1,5 m
2	10	Horizontal air pipe	10,0 m
3	1	Air wall terminal	2,0 m
4	1	Air inlet closing flange	included
5	1	Flue bend 80 mm R/D = 0,75	2,5 m
6	12	Horizontal flue	24,0 m
7	1	Air wall terminal outlet flue	5,0 m
		Total	45,0 m

Pipes and fittings reduction table

Table 7

	Description		Reduction			
			Air		Flue	
			Vertical	Horizontal	Vertical	Horizontal
Accessories Ø 80	Male-female flue Ø80		1	1	1	2
	Male-female bend 45° Ø80	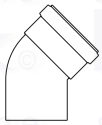	1,2		2,2	
	Male-female bend 90° Ø80	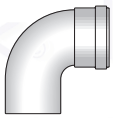	1,5		2,5	
	Condensate flue outlet	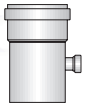			3	
	Airwall terminal products of combustion Ø80					5
	Air terminal of inlet protection Ø80			2		

Table 8

	Description		Reduction			
			Air		Flue	
			Vertical	Horizontal	Vertical	Horizontal
Accessories Ø 80	Outlet flue air inlet for connection with split end Ø80	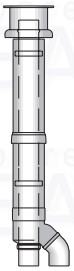	12			

☞ The pressure drop values described refer to original Ferroli pipes and accessories.

Flue terminal positions

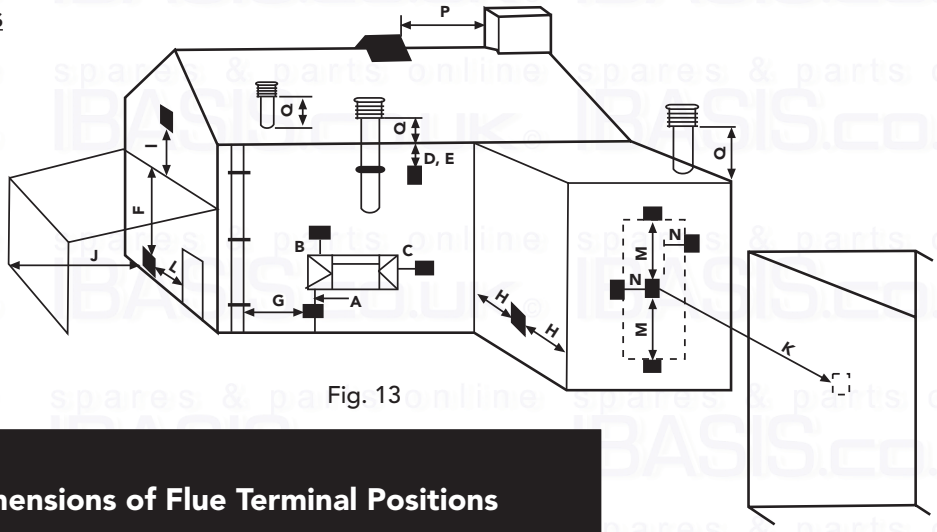

Fig. 13

Minimum Dimensions of Flue Terminal Positions		
A	Directly below an opening, air brick, opening windows, etc.	300mm
B	Above an opening, air brick, opening windows, etc.	300mm
C	Horizontally to an opening, air brick, opening windows, etc.	300mm
D	Below gutters, soil pipes or drain pipes	75mm
E	Below eaves	200mm
F	Below balconies or car port roof	200mm
G	From a vertical drain pipe or soil pipe	150mm
H	From an internal or external corner	100mm
I	Above ground roof or balcony level	300mm
J	From a surface facing the terminal	600mm
K	From a terminal facing the terminal	1200mm
L	From an opening in the car port (e.g. door, window) into the dwelling	1200mm
M	Vertically from a terminal on the same wall	1500mm
N	Horizontally from a terminal on the same wall	300mm
O	From the wall on which the terminal is mounted	N/A
P	From a vertical structure on the roof	150mm
Q	Above intersection with roof	300mm

NOTE

N/A = Not applicable

Condensing Terminal Positions: If the flue is to be terminated at low level, then the potential effect of the plume must be considered.

The plume should not be directed:
- across a frequently used access route
- towards a window or door
- across a neighbouring property

3. SERVICE AND MAINTENANCE

3.1 Settings

All the adjustment and conversion operations must be performed by Qualified Personnel, such as personnel from the Local Customer Service Centre.
FERROLI Ltd. declines all liability for damage to property or injury to persons arising from work undertaken to the appliance by non-authorised persons
Conversion of supply gas
The appliance can operate on Natural Gas or LPG as the supply gas, and is factory configured for use with one of the two gases, as is clearly marked on the packaging and on the rating plate on the appliance itself. If the appliance has to be used with a gas other than the one it has been set for, the special conversion kit must be used, as shown below:

1. Replace the injectors in the main burner, installing the injectors indicated in technical data table in Chap. 4.4, according to the type of gas used
2. Adjust the minimum and maximum pressures of the burner (ref. corresponding paragraph), setting the values indicated in technical data table for the type of gas used.
3. Change the position of Jumper 02 on the electronic board (ref. corresponding paragraph).
4. Apply the adhesive label in the conversion kit next to the rating plate, to confirm the conversion operation.

Adjusting the gas pressure and heat output

The following adjustments must be carried out by qualified personnel only.
To adjust boiler heat input simply adjust the burner pressure gas via the pressure regulator on the gas valve (fig. 14).
Adjust the gas pressure at the burner by turning the pressure regulating screw: turn it clockwise to increase the burner pressure and anticlockwise to decrease it.
The diagrams indicate the variation in heat output to the water as burner working pressure is varied (fig. 28).
Adjusting boiler output to the actual requirements of the central heating system will minimise boiler cycling thus saving fuel, varying the output has virtually no effect on the efficiency and combustion characteristics of the boiler.

Adjusting the soft light facility

The appliance has a soft light facility to ensure a quiet ignition sequence.
Measuring the gas pressures during ignition is done via the outlet test point on the gas valve, the pressure should be kept to a minimum, but sufficient to ensure correct cross lighting of the burner.

Natural gaz	Min soft setting	2 mbar
	Mid soft setting	4 mbar
	Max soft setting	6 mbar

LPG	Min soft setting	5 mbar
	Mid soft setting	12 mbar
	Max soft setting	20 mbar

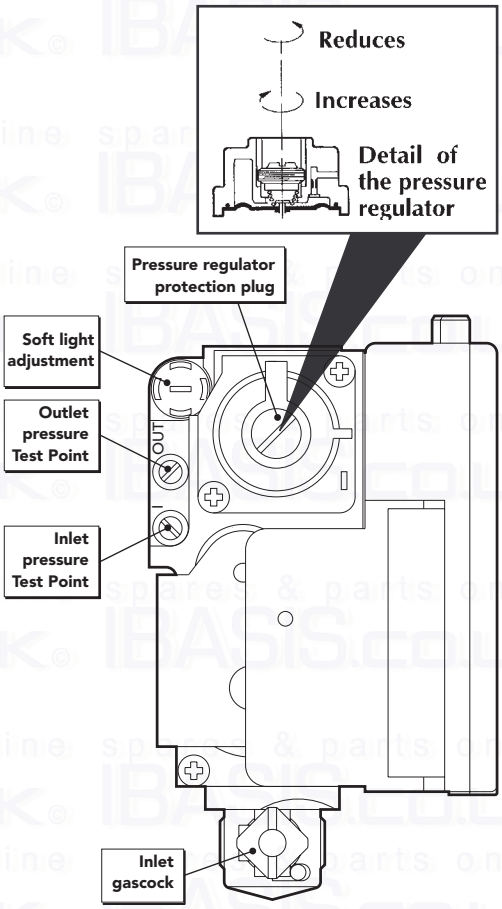

fig. 14

3.2 Commissioning

⚠ The appliance must only be commissioned for use by Qualified Personnel,

Before igniting the boiler:

- Open the isolation valves between the boiler and systems.
- Check the gas system for soundness, and ensure their are no leaks.
- Fill the system with water to approximately 1bar pressure and ensure that the air contained in the boiler and the system has been completely vented, by opening the air vent valve on the boiler and any vent valves installed within the system.
- Check that there are no water leaks in the heating system, in the domestic hot water circuits, in the connections or in the boiler.
- Check the correct connection of the electrical system.
- Check that the appliance is correctly earthed.
- Check that there are no flammable liquids or materials in the immediate vicinity of the boiler.

Igniting the boiler

- Open the gas isolation valve upstream of the boiler.
- Purge the air in the gas supply pipework upstream from the gas valve.
- Place the main switch in the ON position.
- Place the control knob "B" in the Winter position to a value higher than 50°C and set the room thermostat, to the required temperature value. At this point, the burner will ignite and the boiler will start operating automatically, managed by its control and safety devices.
- Checking gas inlet pressure
  - Connect a pressure gauge to inlet test point;
  - Check the pressure gauge is reading 20 mbar (+/-1 mbar);
  - Check that this pressure remains as above with any other gas appliances in the house turned on;
  - If the pressure is below this reading it should be investigated before continuing as this is a sign of an incorrect or partially blocked gas supply;
  - Turn-off appliance;
  - Remove pressure gauge, tighten test point and test with leak detection fluid.
- Check that the burner pressure and gas rate for the heating system are correct.

If, after correctly having performed the ignition operations, the burner does not ignite and the shut-down warning light is on, wait around 15 seconds and then push the reset button "A" (Fig. 1) and release it. The control unit will be reset and will repeat the ignition cycle. If, after a number of attempts, the burner does not ignite, refer to the paragraph "Troubleshooting".

In the case of power failures while the boiler is in operation, the burners will switch off. When mains power returns, the burners will automatically re-ignite.

Checks during operation

- Check the gas supply and the water system for tightness.
- Check the efficiency of the flues and air-flue gas pipes during the operation of the boiler.
- Check that the water circulation between the boiler and the systems is correct 11°C ΔT.
- Check the correct ignition of the boiler, by performing a series of ignition and shut-down tests using the room thermostat and the time clock.
- Ensure that the consumption of gas indicated by the gsa meter corresponds to the values shown in the technical data table in Chap. 4 section 4.4
- Flush and treat the system as per BS7593, whilst balancing the radiators and indirect hot water supplys.

Shut-down

See page 5 of this manual.

3.3 Maintenance

The following operations must only be performed by Qualified Personnel

Seasonal checks on the boiler and the stack

The following checks should be made on the appliance at least once a year:

- The control and safety devices (gas valve, thermostats, etc.) must be working correctly.
- The air-flue gas terminals must be free of obstacles and not have any leaks.
- The water systems and the gas supply must be sound.
- The burner and the heat exchanger must be clean. Follow the instructions in the next paragraph.
- The electrodes must be free of deposits and positioned correctly;
  (Ignition electrode gap 3.5mm)
  (Flame sensing electrode 12 to 15mm).
- The pressure of the water in the system when cold must be around 1 bar; if not, restore this value.
- The expansion vessel must be full (1bar air pressure when cold and system at zero pressure).
- The gas rate and the pressure must correspond to the values indicated in the corresponding tables.
- The circulation pump must free and not be blocked.

Opening the casing

To open the boiler casing:

1 Using a screwdriver, completely remove the 2 screws, **"A"**
2 Open the control panel **"B"** by pulling down
3 Unscrew the 2 screws **"C"**
4 Remove the casing **"D"** by pulling out at base and lifting off the top hooks.

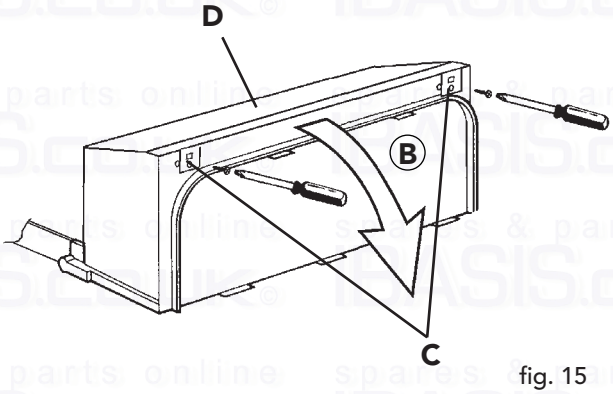

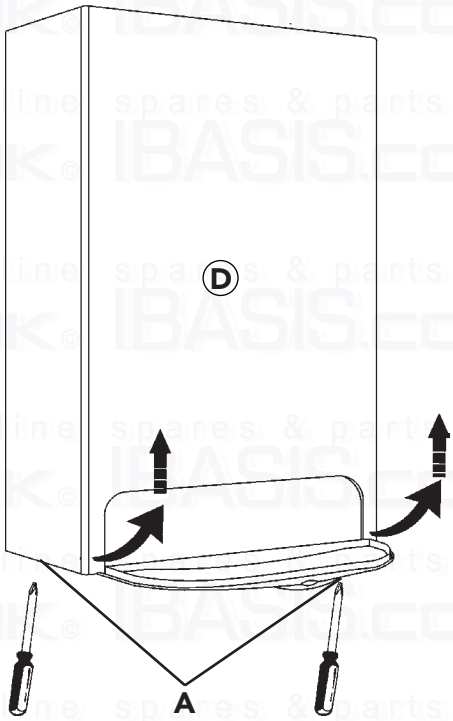

fig. 15

Cleaning the boiler and the burner

The heat exchanger should be cleaned using an appropriately sized flue brush, to remove any deposits within the exchanger fins.
Clean the burner in a similar manner ensuring the ports and mixing venturis are clear, alternatively you can use compressed air although care should be taken not too inhale any dust particles.
Clean the burner injectors, do not use wire to do this as you may block or oversize the ports this may adversely effect the running of the appliance.

⚠ After these checks, ensure that there are no gas leaks.

Analysis of combustion

Two test points are installed inside the boiler, one for the flue gases and the other for the intake air.
To make the measurements, proceed as follows:

1) Remove the boiler casing
2) Open the air and flue gas sample points in the sealed compartment;
3) Insert the probes as far as possible;
4) Operate the boiler
5) Adjust the boiler temperature to the maximum setting.
6) Wait 10-15 minutes to allow the boiler to reach stable operating conditions*
7) Take a reading with your flue gas analyser.
8) CO/CO2 ratio should be 0.004 or below. If above a full service is required to find the cause and then RE-TEST.
9) Following a full service the permissible reading is now 0.008 or below.

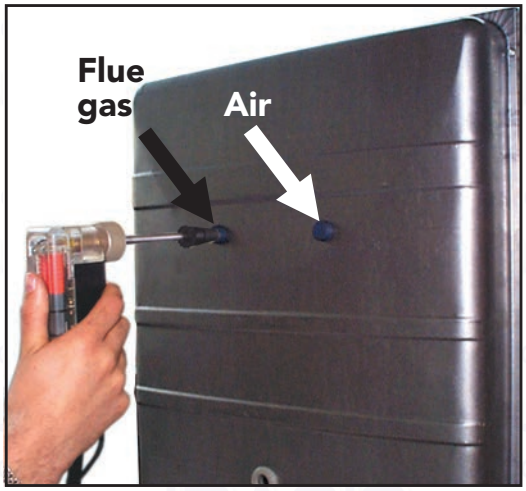

fig. 16

☞ *Testing before thermal equilibrium has been reached will give incorrect readings.

3.4 Replacement of Parts

Initial procedure

a) Ensure the boiler is cold, electricity supply is isolated, and the gas supply is turned off at the inlet valve on the boiler

b) For replacement of parts where water connections are broken, it will be necessary to isolate and drain the water circuits of the boiler only. The cold water mains inlet is isolated at the inlet cock.
The C.H. flow and return cocks are turned off at the isolation valves. The C.H. is drained via the drain off valve on the appliance.

c) Remove components as shown below and replace in reverse order.

d) Ensure water and gas washers are in good condition.

Final procedure

- Re-open cocks and re-charge the system to about 1 bar, and vent boiler and radiators. Re-charge to 1 bar if necessary.
- Upon completion of the work the following, should be checked:
  I) Gas soundness of all joints
  II) Water soundness of all joints
  III) The electricity supply.
  IV) The pressure of the sealed system and top up where necessary.

To lower the control panel

- Remove the two fixing screw "A"
- Rotate down the front panel "B"

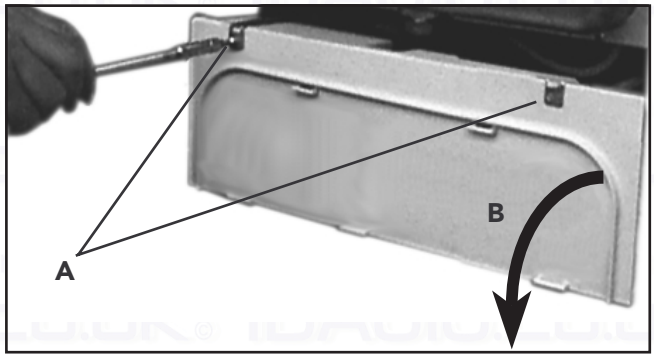

fig. 17

Remove and re-presurising of C.H. expansion vessel

- Refer to 3.4 a, b
- Isolate electricity and water supplies
- Remove outer case (two screws bottom rear corners)
- Loosen the "A" connection to the expansion vessel
- Loosen screws "B" and remove the bracket
- Remove the expansion vessel
- Re-assemble in reverse order using the new vessel
- Check the expansion vessel pressure;
  (charge pressure 0,8-1 bar) through the valve "C"
- Ensure pressure relief value is open
  (twist about 1/2 of a turn) when re pressurizing and refill the system ensuring there are no leaks.

☞ It may be necessary to remove the boiler to change the expansion vessel due to site restrictions.

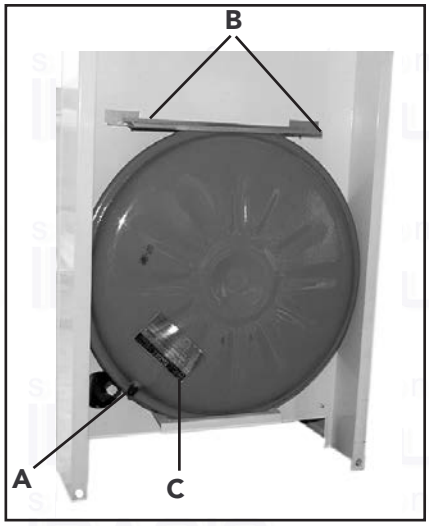

fig. 18

Gas valve (fig. 19)

- Isolate gas and electricity supplies
- Remove outer case (two screws bottom rear corners)
- Remove the two securing screws and lower control panel
- Disconnect electrical connections from valve
- Disconnect plastic compensation tube "C"
- Loosen the connection "D" on gas outlet pipe and the gas valve inlet connection on the boiler
- Remove the fixing screw "E" below gas valve
- Slide out gas valve
- Remove four fixing screw "F" on top of the valve and disconnect the gas outlet pipe
- Replace the gas outlet seal.
- Replace in reverse order with the new gas valve and follow the commissioning procedure section 3.2

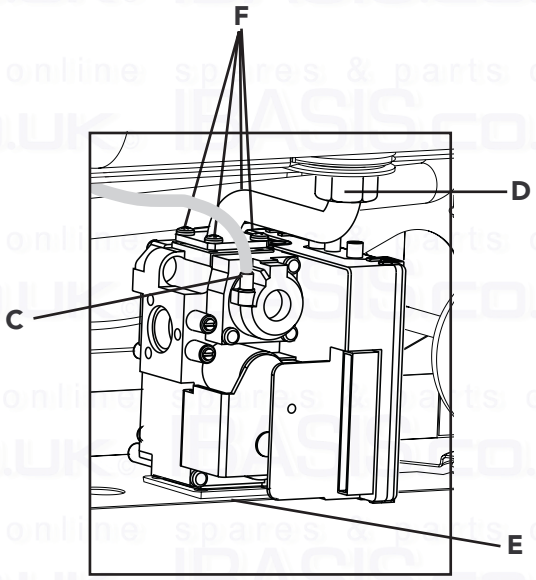

Fig. 19

Air pressure switch (fig. 20)

- Isolate electricity
- Remove outer case (two screws bottom rear corners)
- Open room sealed department (four screws two either side)
- Remove the two screw "A" fixing air pressure switch
- Disconnect electrical leads "B"
- Remove pressure sensing tubes (white=D; Red=C)
- Note relevant positions of all connections and replace in reverse order.

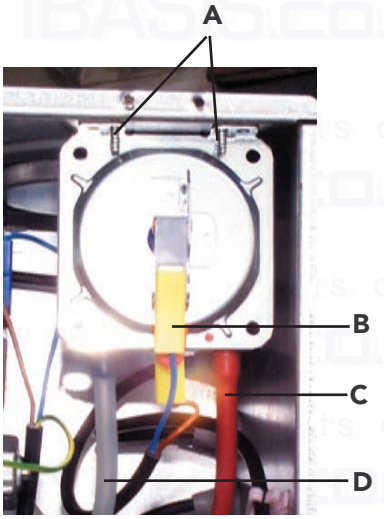

Fig. 20

Safety Valve (fig. 21)

- Isolate electricity and water supplies
- Remove outer case (two screws bottom rear corners)
- Remove the two securing screws and lower control panel
- Identify valve from fig. 21
- Drain the boiler
- Release the outlet union to the valve and undo the valve union connection
- Remove the valve outlet fitting
- Replace in reverse order and refill the system to 1bar.

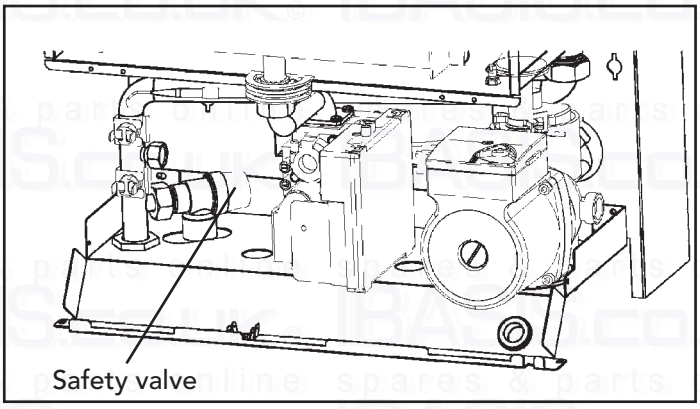

Fig. 21

Removal of burner (fig. 22)

- Isolate gas and electricity supplies
- Remove outer case (two screws bottom rear corners)
- Remove room sealed cover
- Disconnect ignition and flame rectification leads "A"
- Undo gas rail union "B"
- Undo two screws securing the burner assembly to the boiler combustion chamber "D"
- Withdraw the burner assembly

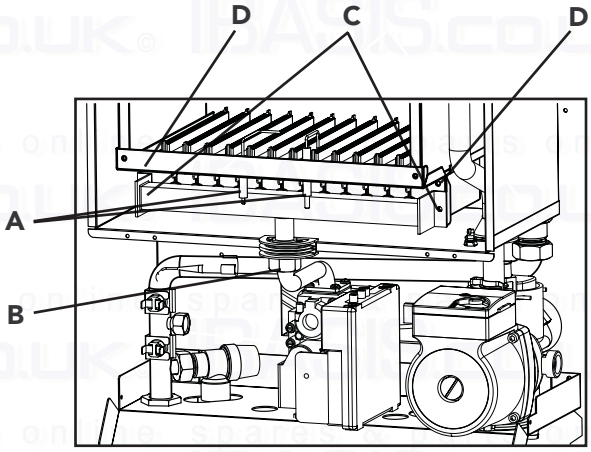

fig. 22

Injectors (fig. 22)

- Proceed as above
- Remove fixing screw "C" on both sides of gas manifold
- Remove gas manifold
- Unscrew and remove injectors;
- Clean or change injectors

Removal of fan (fig. 23)

- Isolate gas and electricity supplies
- Remove outer case (two screws bottom rear corners)
- Remove room sealed cover
- Disconnect fan electrical leads "A"and note positions
- Disconnect air pressure tubes from air pressure switch "B" + note positions
- Undo two screws securing fan assembly "C"
- Remove fan from boiler
- Swap mounting plate over to new fan + replace in reverse order

Limit thermostat, or overheat cut off thermostat (fig. 23)

- Isolate electricity
- Remove outer case (two screws bottom rear corners)
- Remove room sealed cover (four screws two either side)
- Identify the location of the faulty thermostat from fig 23
- Remove the thermostat from heatexchanger tube, with its clip
- Remove electrical connections from thermostat
- Remove clip from thermostat
- Replace in reverse order

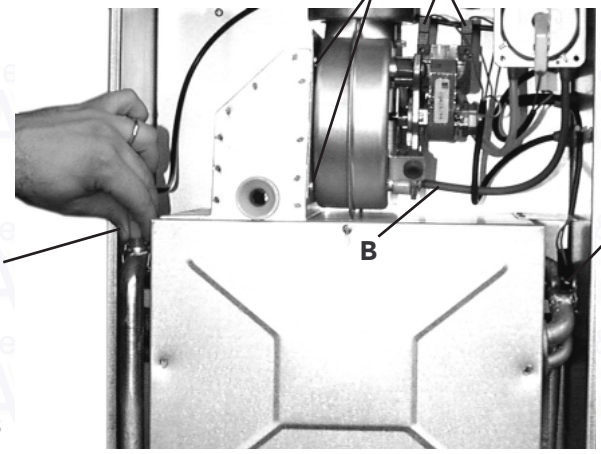

fig. 23

Spark or flame detect electrode (fig. 24)

- Isolate gas and electricity supply
- Remove outer case (two screws bottom rear corners)
- Open room sealed compartment and combustion chamber as previously mentioned
- Identify electrode from fig. 24
- Unplug electrical connection "A" from the electrode to be replaced
- Unscrew the fixing screw and remove faulty electrode
- Replace in reverse order, Flame detection gap 12 to15mm Spark electrode gap 3.5mm

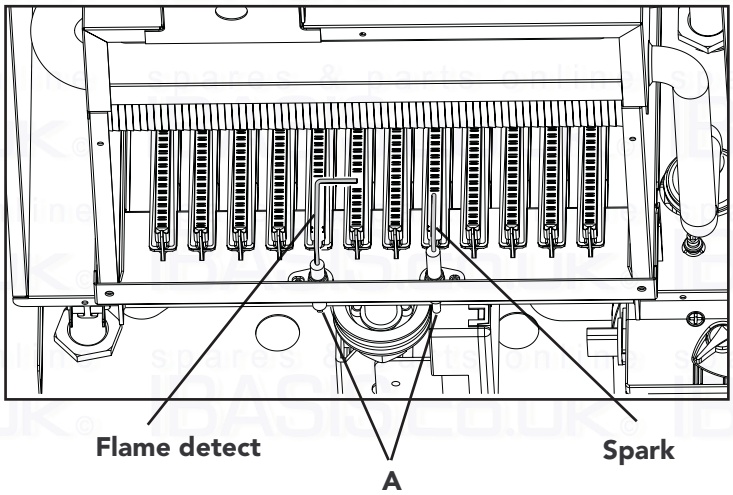

Fig. 24

Pump

Replacement of pump head

- Isolate electricity and close the flow and return isolation valves
- Remove casing (two screws bottom rear corners).
- Remove the two securing screws and lower control panel
- Release pressure from boiler via a suitable drain off point
- Unplug the pump lead from the pump head
- Place a piece of cloth or other absorbent material over the rear of the control panel to catch any drops of water that may fall when the pump head is removed.
- Using a 4mm allen key undo the four allen screws in the pump head, lift away pump head from the pump body
- fit new head into pump body and secure with the allen screws tightening evenly.
- re fill the system to 1bar vent and spin new pump
- Replace electrical connection.

Removal of heat exchanger

- Isolate gas, water and electricity supplies
- Remove casing (2 screws bottom corners)
- Remove the two securing screws and lower control panel
- Drain the boiler ensuring the heat exchanger is empty!
- Remove sealed compartment front panel
- Disconnect the overheat thermostat and central heating limit thermostat
- Remove the main burner, fan, flue hood and air pressure switch as described previously
- Remove the pump to heat exchanger return connection and lower locknut
- Undo the heatexchanger flow connection and lower locknut
- Lift out heat exchanger
- Re-assemble in reverse order ensuring no leaks, commission appliance as per section 3.3

4. CHARACTERISTICS AND TECHNICAL SPECIFICATIONS

4.1 Dimensions and fittings

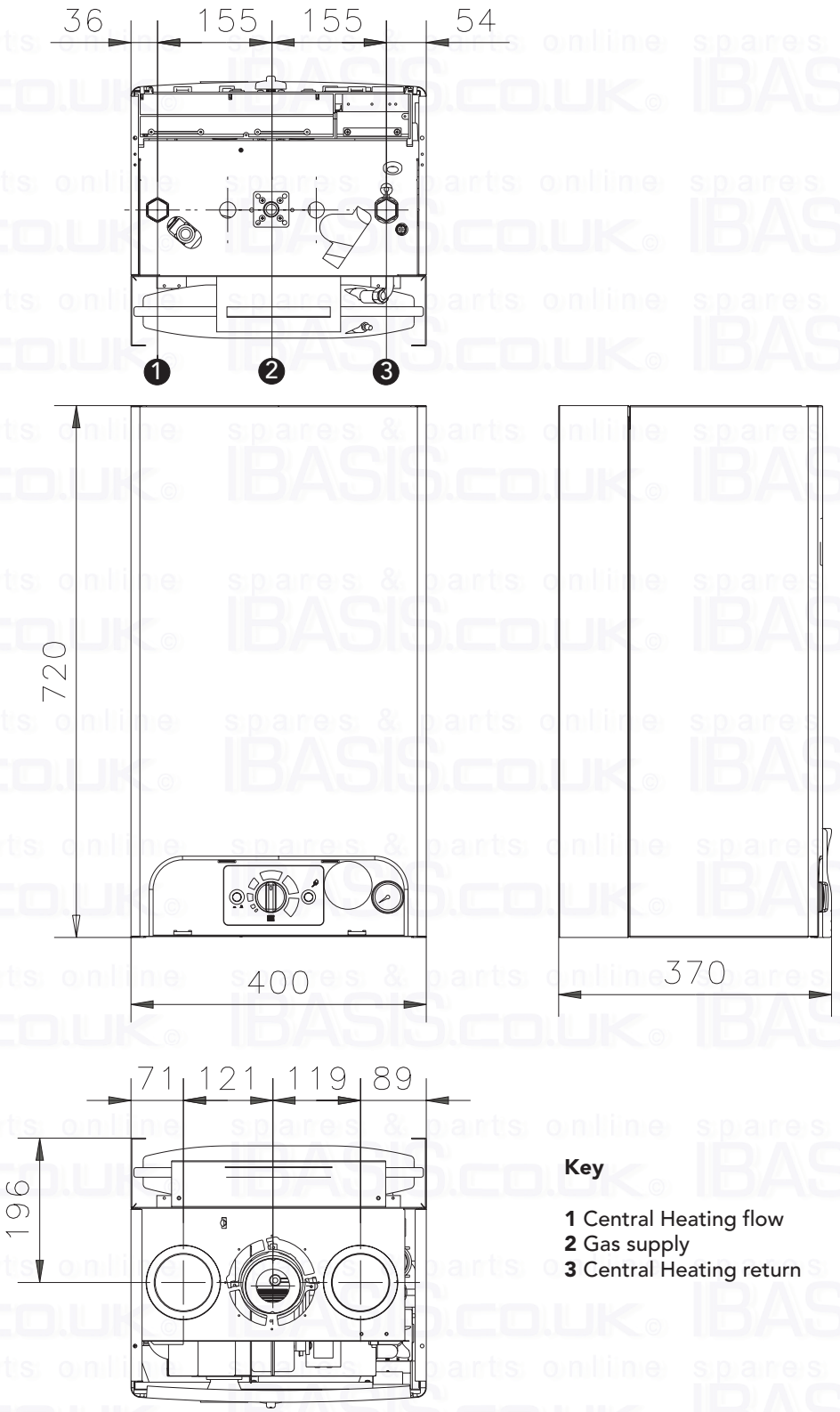

Key

1 Central Heating flow
2 Gas supply
3 Central Heating return

fig. 25

4.2 Overall view and main components

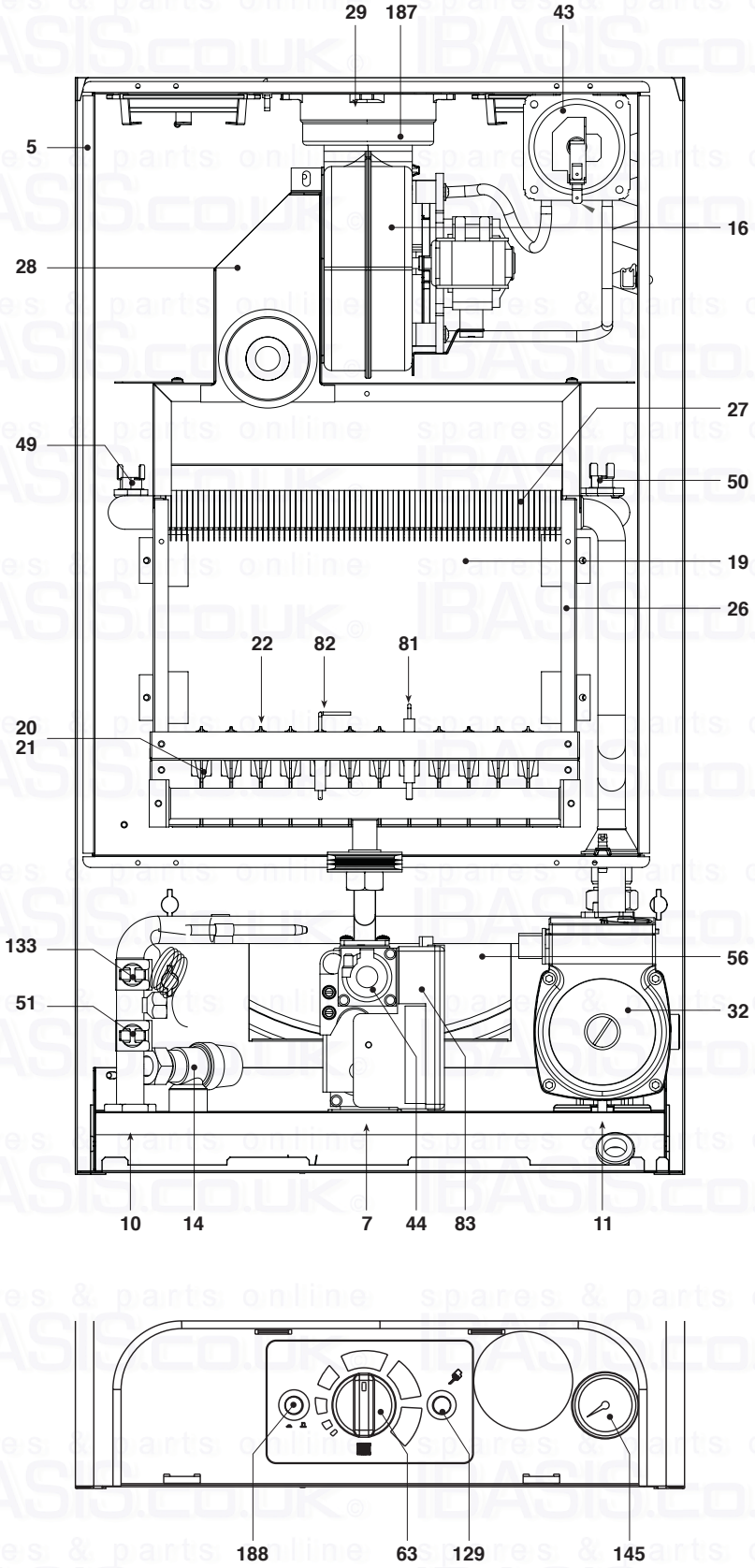

fig. 26

Key

5	Room sealed compartment
7	Gas inlet
10	Central heating flow
11	Central heating return
14	Safety valve
16	Fan
19	Combustion chamber
20	Burner assembly
21	Injectors x 12
22	Burners x 12
26	Combustion chamber insulation
27	Copper heat exchanger
28	Flue collector from heat exchanger
29	Fan adaptor ring
32	Central heating pump
43	Air pressure switch
44	Gas valve
49	Safety overheat thermostat
50	Central heating flow limit thermostat
51	Central heating frost thermostat
56	Expansion vessel
63	CH boiler thermostat
81	Ignition electrode
82	Flame sensor electrode
83	Full auto control unit
129	Reset knob with lamp
133	Pump overrun thermostat
145	Central heating pressure gauge
187	Flue restrictor
188	ON/OFF switch

4.3 Hydraulic diagram

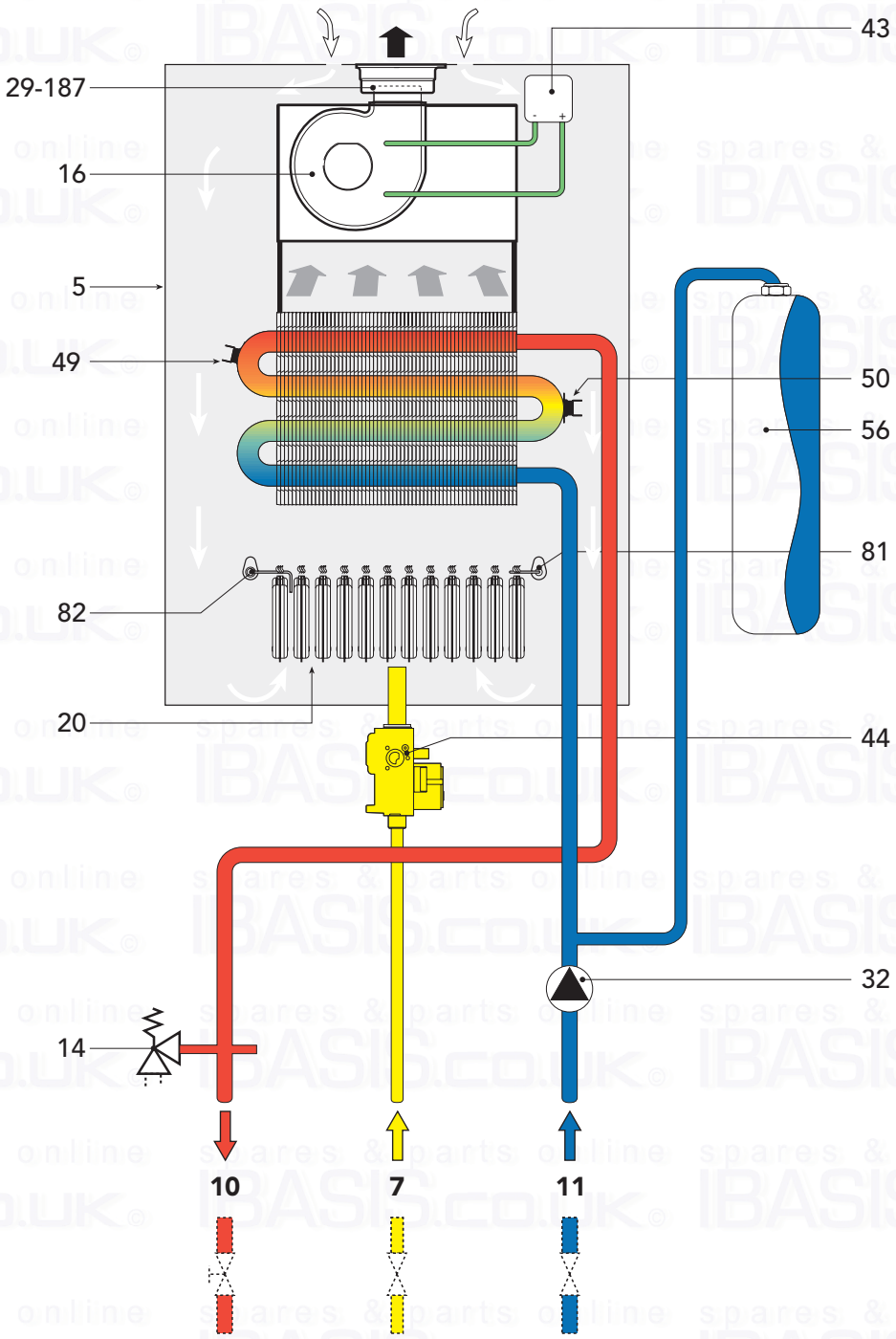

fig. 27

Key

5	Room sealed compartment	**43**	Air pressure switch
7	Gas inlet	**44**	Gas valve
10	Central heating flow	**49**	Safety overheat thermostat
11	Central heating return	**50**	Central heating flow limit thermostat
14	Safety valve	**56**	Expansion vessel
16	Fan	**81**	Ignition electrode
20	Burner assembly	**82**	Flame sensor electrode
29	Fan adaptor ring	**187**	Flue restrictor
32	Central heating pump		

4.4 Technical data table

Output		Pmax	Pmin
Nominal Heat Input (Net)	kW	25,8	11,2
Nominal Heat Output	kW	23,3	9,7
Gas supply		**Pmax**	**Pmin**
Main injectors, Natural Gas (G20)	mm	12 x 1.3	
Supply pressure, Natural Gas (G20)	mbar	20,0	
Burner pressure, Natural Gas (G20)	mbar	11,8	2,5
Natural gas rate (G20)	nm^3/h	2,73	1,19
Main injectors, LPG (G31)	mm	12 x 0.77	
Supply pressure, LPG (G31)	mbar	36,0	
Burner pressure, LPG (G31)	mbar	36,0	7,0
LPG gas rate (G31)	kg/h	2,00	0,87
Central heating			
Maximum central heating operating temperature	°C	90	
Maximum central heating operating pressure	bar	3	
Safety valve	bar	3	
Minimum central heating operating pressure	bar	0,8	
Expansion vessel capacity	litres	8	
Expansion vessel pre-fill pressure	bar	1	
Hot water capacity	litres	1,5	
Dimensions, weights, fittings			
Height	mm	720	
Width	mm	400	
Depth	mm	370	
Weight with packaging	kg	35	
Gas system fittings (with isolation valve fitted)	mm	22	
C.H. flow (with isolation valve fitted)	mm	22	
Central heating return (with isolation valve fitted)	mm	22	
Power supply			
Max Power Absorbed	W	125	
Power supply voltage/frequency	V/Hz	230/50	
Index of protection	IP	X4D	

4.5 Diagrams

Pressure - output diagrams

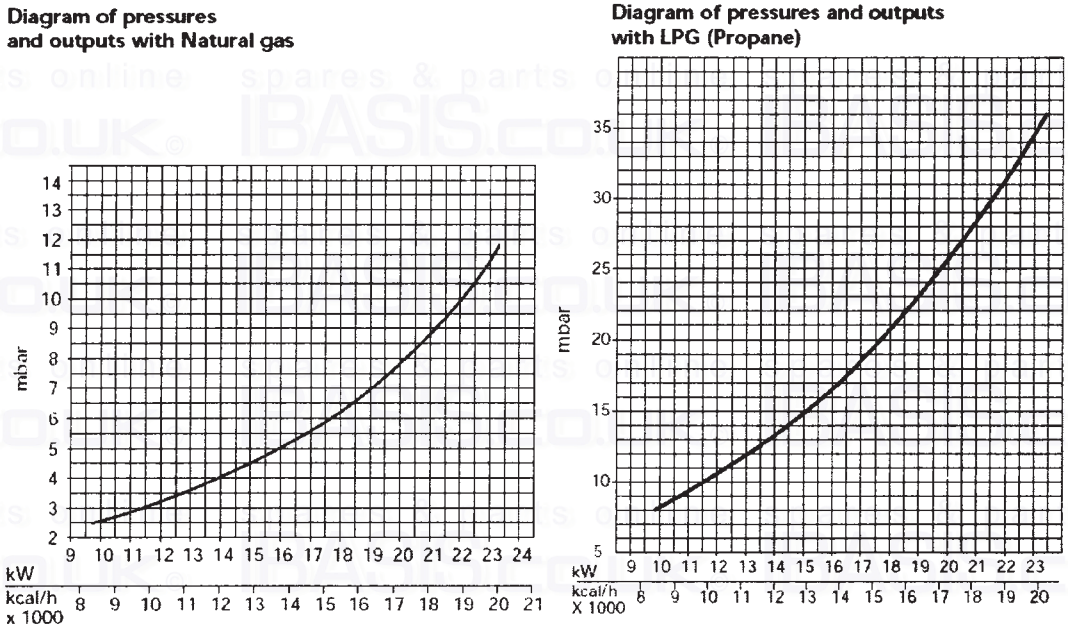

Minimum pressure 2.5 mbar for Natural Gas (7mb for LPG)
Maximum pressure 11.8 mbar for Natural Gas (36mb for LPG)

fig. 28

Discharge head available to system

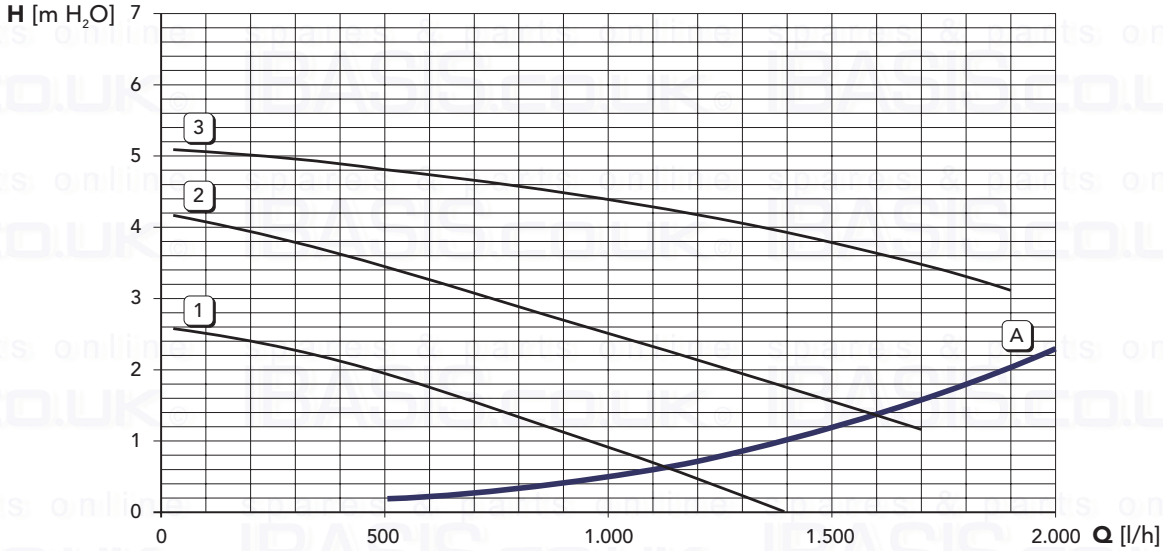

Legenda

1 - 2 - 3 = Pump switch positions
A = Boiler pressure drop

fig. 29

4.6 Internal electrical diagrams

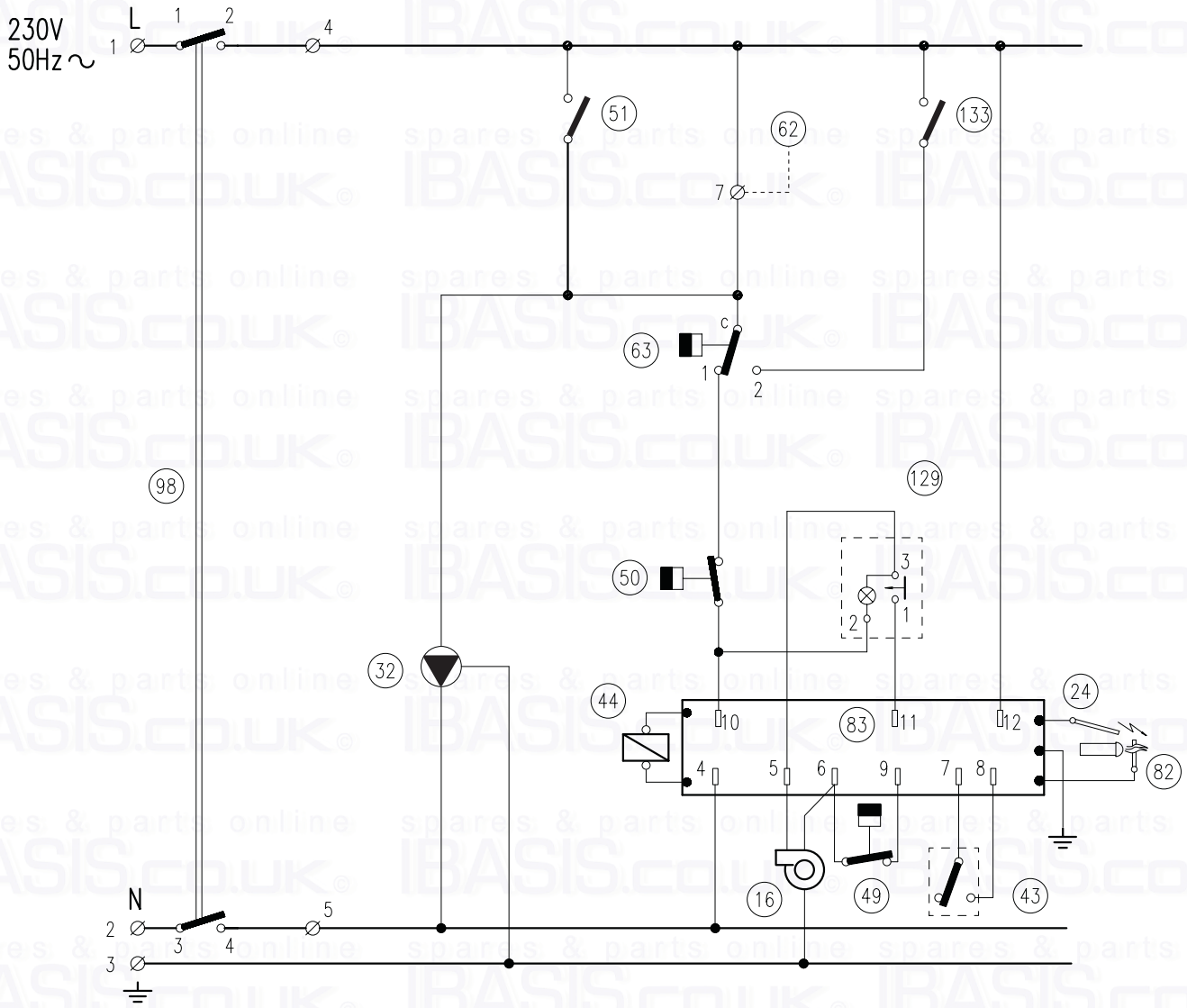

fig. 30a

16	Fan
24	Spark electrode
32	Central heathing
43	Air pressure switch
44	Combination gas valve
49	Overheat Cut-Off thermostat
50	Central heating limit thermostat
51	Central heating frost thermostat
62	External control (switched live 230V A/C)
63	C.H. boiler thermostat
82	Ionisation electrode
83	Full sequence automatic control
98	main switch
129	Reset knob with lamp
133	pump overrun

NOTE: Dotted lines indicate connections to be performed during installation

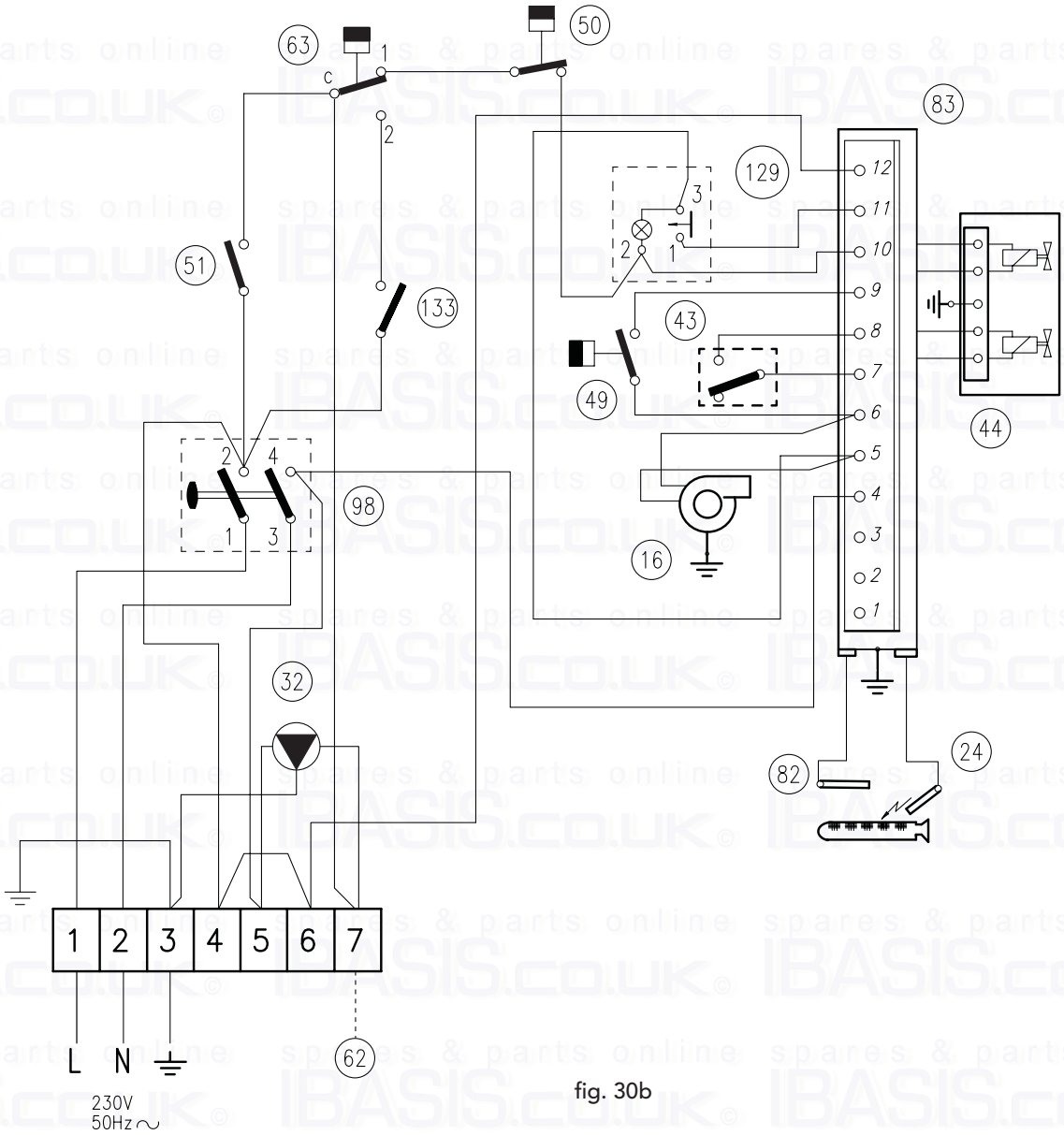

fig. 30b

16	Fan
24	Spark electrode
32	Central heathing
43	Air pressure switch
44	Combination gas valve
49	Overheat Cut-Off thermostat
50	Central heating limit thermostat
51	Central heating frost thermostat
62	External control (switched live 230V A/C)
63	C.H. boiler thermostat
82	Ionisation electrode
83	Full sequence automatic control
98	main switch
129	Reset knob with lamp
133	pump overrun

NOTE: Dotted lines indicate connections to be performed during installation

4.7 Fault finding

CHECK THE FOLLOWING BEFORE STARTING.

1. GAS SUPPLY TURNED ON AND ADEQUATELY PURGED.
2. ELECTRICAL SUPPLY IS TURNED ON AND 230V A/C.
3. POLARITY IS CORRECT.
4. CENTRAL HEATING IS FULL AND VENTED OF ANY AIR.
5. PUMP IS VENTED AND SPINS FREELY.
6. AUTOMATIC BY-PASS IS SET TO 6LTRS PER MINUTE.
7. SYSTEM IS FLUSHED TO BS7593.

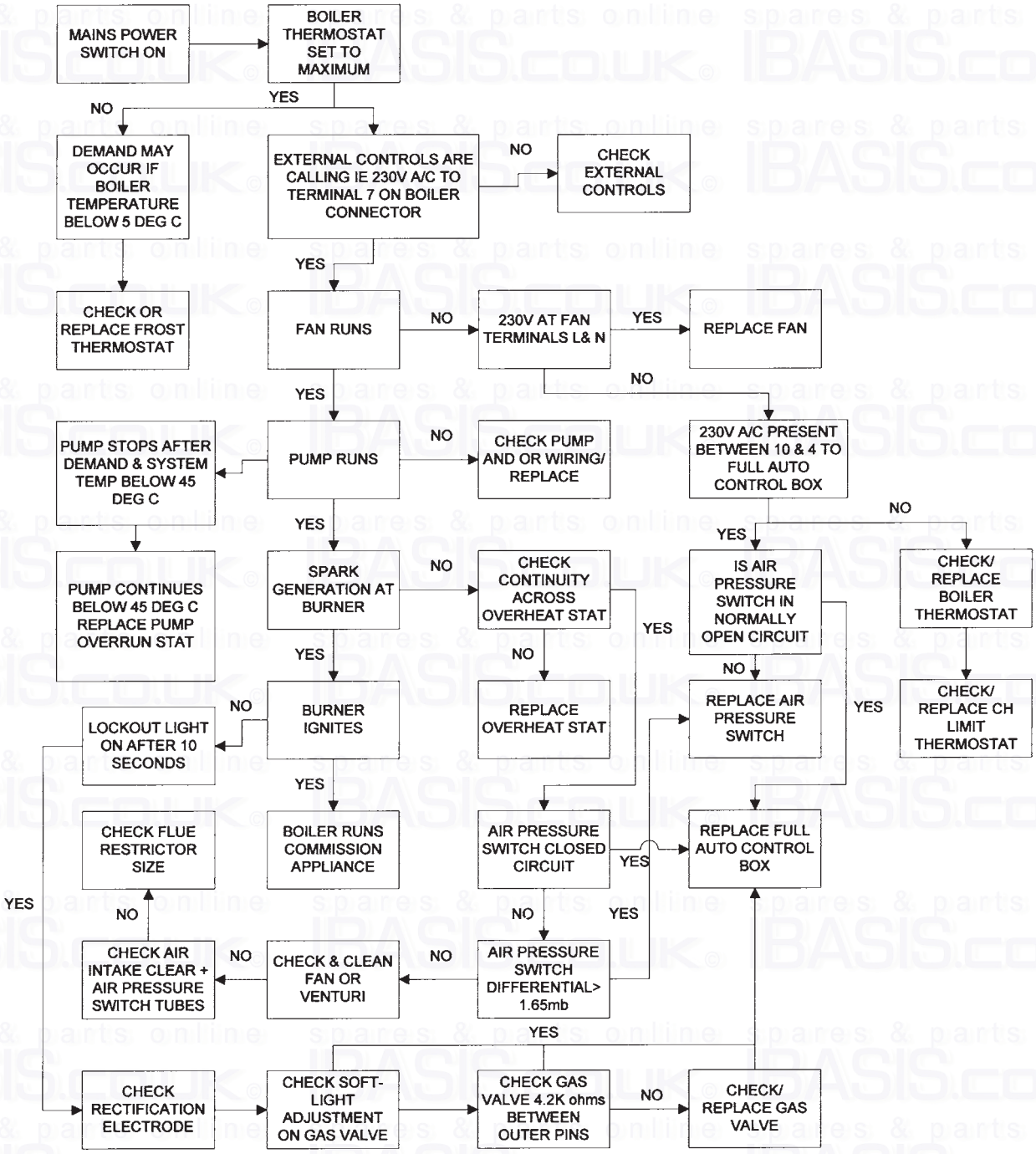

Should you require help with any difficulties call our Technical Service Helpline on 08707 282 885

Phone numbers:

Installer _____

Service Engineer _____

BECAUSE OF OUR CONSTANT ENDEAVOUR FOR IMPROVEMENT DETAILS MAY VARY SLIGHTLY FROM THOSE QUOTED IN THESE INSTRUCTIONS.

FERROLI

ALL SPECIFICATIONS SUBJECT TO CHANGE

Please note - to avoid incurring unnecessary expense, in the event of a boiler shut down, check this in not caused by lack of electricity supply, gas supply or low water pressure before calling our Customer Service Helpline.

Lichfield Road, Branston Industrial Estate, Burton Upon Trent, Staffordshire DE14 3HD
Tel. 08707 282 885 - Fax 08707 282 886

spares & parts online IBASIS.CO.UK