FERROLI S.p.A.

TEMPRA 12 / 18

Wall-Hung, Gas-Fired, System Boiler, for Central Heating

TEMPRA 12:
G.C. NO: 41-267-11

TEMPRA 18:
G.C. NO: 41-267-12

INSTALLATION, MAINTENANCE AND USER INSTRUCTIONS

cod. 3543724/3 - 01/2003

FERROLI

IMPORTANT

Your "benchmark" Installation, Commissioning and Service Record Log Book will be enclosed in your customer information pack. "This record must be completed and left with the end user"

"All CORGI Registered Installers carry a CORGI ID card and have a registration number. Both should be recorded in your central heating log book. You can check with the CORGI registered by calling CORGI on 01256 372300".

- Carefully read the warnings in this instruction booklet, as they provide important indications on the safety of installation, operation and maintenance.
- The instruction booklet is an integral and essential part of the product and must be carefully kept by the user for future reference.
- If the appliance is sold or transferred to another owner, or if it is moved, always check that the booklet accompanies the boiler for reference by the new owner and/or installer.
- The installation and maintenance operations must be performed according to the standards in force, the instructions of the manufacturer and must be carried out by professionally qualified personnel.
- Incorrect installation or poor maintenance may cause a damager to persons or property. The manufacturer declines all liability for damage deriving from errors in the installation and maintenance of the appliance, and where there is a failure to observe the instructions provided by the manufacturer.
- Before performing any cleaning or maintenance operations, disconnect the appliance from the mains power supply using the system switch and/or the corresponding on-off devices.
- In the event of faults and/or poor operation of the appliance, it should be deactivated. Do not attempt to repair the appliance. Contact professionally qualified personnel only.
- The products must only be repaired-replaced by professionally qualified personnel, using original spare parts only. Failure to heed this warning may affect the safety of the appliance.
- To ensure the correct operation of the appliance, annual maintenance must be performed by qualified personnel.
- This appliance must only be used for the purposes it has specifically been designed for. All other uses are considered improper and thus dangerous.
- After having removed the packaging, check that the contents are intact.
- The parts of the packaging must not be left within the reach of children, as they are potential sources of danger.
- In case of doubt do not use the appliance and contact your supplier.

This symbol indicates **"Warning"** and is placed near all warnings regarding safety. Such provisions must be strictly adhered to so as to avoid danger and damage to persons and property.

This symbol highlights a note or an important warning.

Certification

The CE Mark attests that Ferroli gas-fired appliances conform to the requirements specified in the corresponding European directives.

In particular, this appliance conforms to the following EEC directives:

- Directive 90/396, Gas Appliances,
- Directive 92/42, Efficiency,
- Directive 73/23, Low Voltage, (amended by no. 93/68)
- Directive 89/336, Electromagnetic Compatibility (amended by no. 93/68)

1. User/operating instructions 4
1.1 Introduction 4
1.2 Control panel 5
1.3 Ignition and shut down 5
1.4 Setting 6
1.5 Maintenance 6
1.6 Troubleshooting 6

2. Installation 7
2.1 General instructions 7
2.2 Place of installation 7
2.3 Water connections 9
2.4 Gas connection 10
2.5 Electrical connections 11
2.6 Flue connections 14

3. Service and maintenance 22
3.1 Settings 22
3.2 Commissioning 24
3.3 Maintenance 25
3.4 Remplacement of parts 27
3.5 Troubleshooting 31

4 Characteristics and technical specifications 34
4.1 Dimensions and fittings 34
4.2 Overall view and main components 35
4.3 Hydraulic diagram 36
4.4 Technical data table 37
4.5 Diagrams 38
4.6 Wiring diagram 39

1. OPERATING/USER INSTRUCTIONS

1.1 Introduction

Dear Customer,
Thank you for having chosen the **Tempra 12/18**, an advanced-concept FERROLI wall-hung boiler featuring cutting-edge technology, high reliability and constructional quality. Please carefully read this manual and leave it with the end user.
The **Tempra 12/18** is a **high efficiency** heat generator for central heating systems, operating on natural gas or LPG.
The boiler can be connected to an external hot water cylinder for the production of domestic hot water.
The boiler body is made up of a **copper heat exchanger**, the special shape of which guarantees high heat exchange efficiency in all operating conditions, and **an atmospheric burner** featuring electronic ignition with ionisation flame control.
The boiler is completely **sealed** from the surrounding environment: the air required for combustion is taken in from the outside, and a fan is used to expel the flue gases. The accessories supplied with the boiler also include a variable-speed pump, expansion vessel, safety valve, air pressure switch, temperature sensors and safety thermostat.
The **microprocessor-based** control system means that the operation of the appliance is almost completely automatic. The central heating output is automatically regulated by the control system according to requirements. The domestic hot water output (with external hot water cylinder installed) is automatically and continuously controlled to ensure both comfort and economical operation.
The user simply has to set the temperature required inside the home (using the optional, yet recommended room thermostat) or set the system temperature and the required domestic hot water outlet temperature at the cylinder stat. The regulation and control system will then ensure optimum operation all year round.

spares & parts online IBASIS.CO.UK

1.2 Control panel

To access the control panel, open the drop down cover.

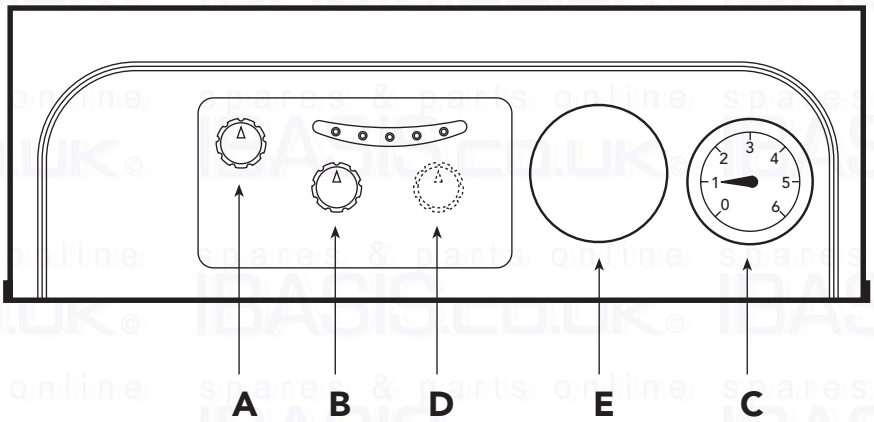

Table 1

LED		
a		Burner on signal
b		Lock-out warning signal
d		Stand-by in central heating operation (light flashing) Central heating request (light on)
e	bar	Mains power (light on)

fig. 1

POS.	DESCRIPTION
A	OFF/ON/RESET switch
B	Central heating temperature setting
C	Water pressure gauge
D	Domestic hot water storage temperature setting (with optional kit)
E	Clock position (optional)

1.3 Ignition and shut-down

Ignition

- Open the gas isolation valve upstream of the boiler.
- Ensure 230V supply is present at the boiler.
- Place the main switch "A" in the ON position.
- Place knob "B" in the Winter position and set the room thermostat, if fitted, to the required temperature value. At this point, the burner will ignite and the boiler will start operating automatically, managed by its control and safety devices.

If, after having correctly performed the ignition operations, the burners do not ignite and the lock-out warning light is on, wait around 15 seconds, then turn knob A to the RESET position and release it. The control unit will be reset and will repeat the ignition cycle. If, after a number of attempts, the burners does not ignite, refer to the paragraph on troubleshooting.

Shut-down

Close the gas isolation valve upstream of the boiler, turn knob "A" to OFF and disconnect the appliance from the mains power supply.

When the boiler power is off the boiler anti-freeze protection is not active.
For extended periods of inactivity during the winter months, and in order to avoid damage due to freezing, all the water should be drained from the boiler, both the domestic hot water and the central heating system; alternatively, drain only the domestic hot water and place approved antifreeze fluid in the central heating system.

1.4 Settings

Summer/Winter setting and system temperature control

With knob **"B"** Fig. 1 in the position of the symbol ☼ (Summer), the central heating function is deactivated. This is only for use with optional water control kit. With the knob **"B"** Fig. 1 in the position of the symbol ❄ (Winter), both the central heating function and domestic hot water are active, if used with an external clock/programmer knob "B" must be kept in the winter position and the clock/programmer used to control the central heating and hot water. Turning the knob clockwise increases the central heating water temperature, anticlockwise decreases it. The temperature can be set from a minimum of 35° to a maximum of 85°. It is not recommended, however, to operate the boiler below 45°.

Setting the ambient temperature (using the optional room thermostat)

Set, using the room thermostat or remote control, the temperature required inside the rooms. Based on the command from the room thermostat, the boiler is ignited and heats the system water to the set central heating outlet temperature. When the required temperature inside the rooms is reached, the boiler switches off. If no room thermostat or remote control is available, the boiler will maintain the system at the set central heating outlet temperature.

Domestic hot water temperature control

Set the hot water cylinder temperature, using knob "D" (supplied in the optional kit).

System water pressure control

Manually filling the central heating system with external connection and cock. The filling pressure when the system is cold, as read on the boiler water pressure gauge, must be around 1.0 bar (at least 0.5 bar). If the pressure drops during operation to a value lower than the minimum described above, the User must restore the initial value using the filling loop. Once the operation is completed, always close the filling loop. This device is fitted to the system by the installer.

1.5 Maintenance

It is recommended to have annual service of the appliance performed by qualified personnel. Please refer to Chap. 3.3 in this manual for further information.
The casing, the control panel and the aesthetic parts of the boiler can be cleaned using a soft and damp cloth, dipped in soapy water if necessary. Do not use abrasive detergents or solvents.

1.6 Troubleshooting

Any anomalies or operating faults are signalled by the LEDs on the control panel. The following table lists the faults that may arise due to simple problems that can be resolved by the user.

Table 2

LED	Problem	Solution
	Boiler locked-out	Check if the gas isolation valve upstream of the boiler and on the counter are open. Turn knob "A" Fig. 1 to "Reset" and then release it. In the event of repeated boiler lock-out, contact the nearest service centre.

☞ Before calling the service centre, check that the problem is not due to no gas or mains power supply.

2. INSTALLATION

2.1 General instructions

This appliance must only be used for the purposes it has been specifically designed for. This appliance is used to heat water to below boiling temperature at atmospheric pressure and must be connected to a central heating and/or hot warm distribution system, according to its characteristics, performance and heating capacity. All other uses are considered improper.

THE BOILER MUST ONLY BE INSTALLED BY SPECIALIST AND QUALIFIED PERSONNEL, IN COMPLETE COMPLIANCE WITH ALL THE INSTRUCTIONS REPORTED IN THIS TECHNICAL MANUAL, THE LEGAL STANDARDS IN FORCE, THE PRESCRIPTIONS OF STANDARDS AND ANY LOCAL STANDARDS, AND ACCORDING TO THE RULES OF GOOD PRACTICE.

Incorrect installation may cause damager to persons and property. The manufacturer will not be held liable in such events.

This appliance must be installed strictly in accordance with these instructions.

The Gas Safety Regulations (Installations & Use).
The Local Building Regulations.
The Building Regulations.
The Buildings Standards (Scotland - Consolidated) Regulations.
British gas publication DM2 - Guide for installation in timber framed housing.

British Standards Codes of Practice:

B.S.	7593		TREATMENT OF WATER IN DOMESTIC HOT WATER CENTRAL HEATING SYSTEMS
B.S.	5546		INSTALLATION OF HOT WATER SUPPLIES FOR DOMESTIC PURPOSES
B.S.	5440	Part 1	FLUES
B.S.	5440	Part 2	AIR SUPPLY
B.S.	5449		FORCED CIRCULATION HOT WATER SYSTEMS
B.S.	6798		INSTALLATION OF GAS FIRED HOT WATER BOILERS
B.S.	6891		GAS INSTALLATIONS
B.S.	7671		IEE WIRING REGULATIONS
B.S.	4814		SPECIFICATION FOR EXPANSION VESSELS
B.S.	5482		INSTALLATION OF LPG

Model Water Bye Laws

For Northern Ireland the rules in force apply

2.2 Place of installation

The appliance's combustion chamber is sealed from the surrounding environment and as a result the appliance may be installed in any room without purpose built ventilation. The installation environment must nonetheless feature sufficient ventilation, to avoid dangerous conditions arising in the event of even minor gas leaks. These safety standards are imposed by EEC Directive no. 09/396 for all gas appliances, including the so-called sealed appliances.

The place of installation must in any case be free of dust, inflammable objects or materials and corrosive gases. The environment must be dry and not prone to freezing.

The boiler is supplied ready for wall-hung installation. The rear frame of the appliance has a series of slots for fastening it to the wall, using screws with wall plugs. The fastening to the wall must provide stable and effective support of the appliance.

The boiler must be fastened to a closed part of wall, which is free of apertures or holes behind the frame of the boiler that may allow the internal components of the boiler to be reached.

If the appliance is enclosed in a cabinet or alongside another appliance, space must be allowed for normal maintenance operations. Fig. 2 and Tab. 3 show the minimum and recommended space to be left free around the appliance.

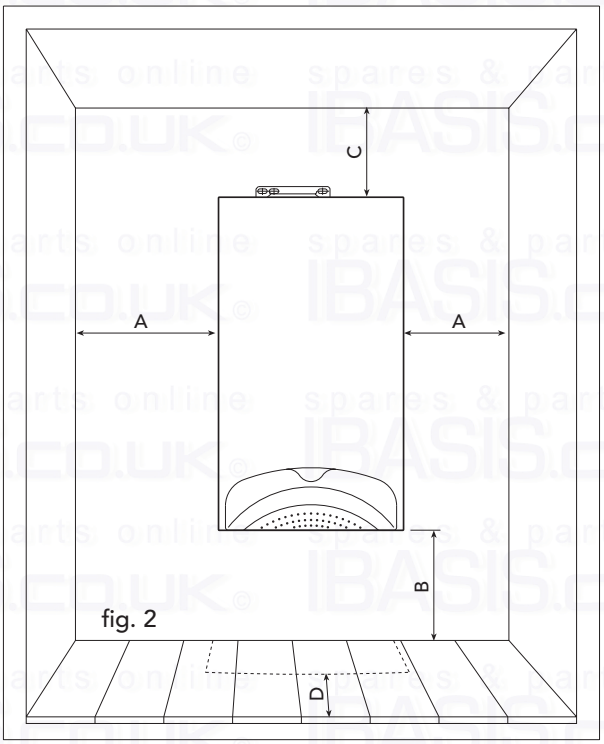

fig. 2

Table 3		
	Minimum	**Recommended**
A	30 mm	150 mm
B	150 mm	300 mm
C	150 mm	300 mm
D	15 mm (from opening panels)	> 500 mm

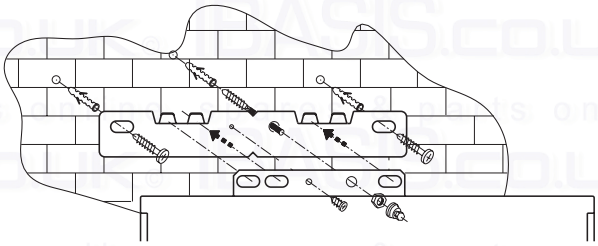
fig. 3a

Fixing to the wall

For Top Flue connections.
Select suitable position for boiler, using the template mark flue outlet and boiler mounting points. Drill two 10 mm holes 70 mm deep to accept the wall plugs. Fix the wall bracket to the wall using standard lock nut (M8) on both sides. Mount the boiler on the wall bracket and fix using the special antitheft nut (M8) as described in the fig. 3a. Mount the boiler on the wall bracket.

For Back Flue connections.
Select suitable position for boiler, using the plate inserted in the optional "back flue outlet kit" mark flue hole and plate fixing points.

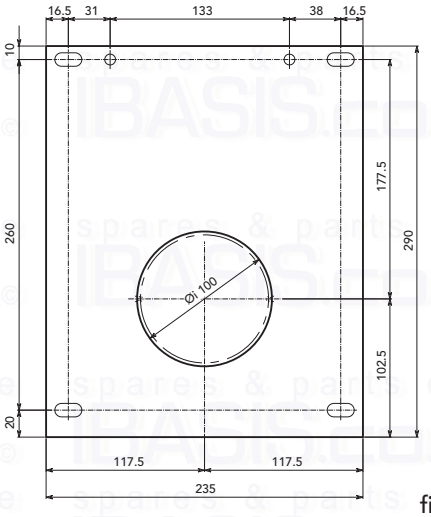

fig. 3b

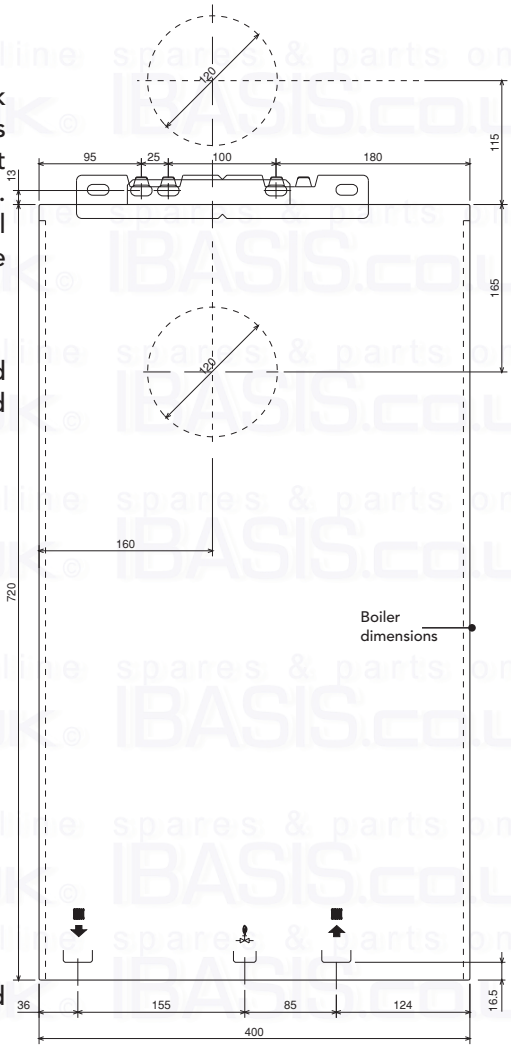

fig. 4

Follow procedure in 2.6 for boiler transformation and mounting.

2.3 Water connections

The heat capacity of the appliance should be established in advance by calculating the heating requirements of the building according to the standards in force. For correct operation and long-life of the boiler, the hydraulic system must be suitably proportioned and always fitted with all the accessories that guarantee regular operation.
In the case where the central heating outlet and inlet pipes follow paths whereby, at some points, pockets of air may form, air vent valves should be installed at such points.
In addition, a drain device should be installed at the lowest point in the system, to allow complete draining.
If the boiler is installed at a lower level than the system, a flow-return valve should be fitted to prevent the natural circulation of water in the system.
The temperature differential between the outlet and the inlet of the boiler should not exceed 20°C.

⚠ Do not use the water pipes as the earth for electrical appliances.

Before installation, carefully clean all the pipes in the system to remove any residues or impurities that may affect the correct operation of the appliance.
Make the connections to the corresponding fittings, as shown in Fig. 5.

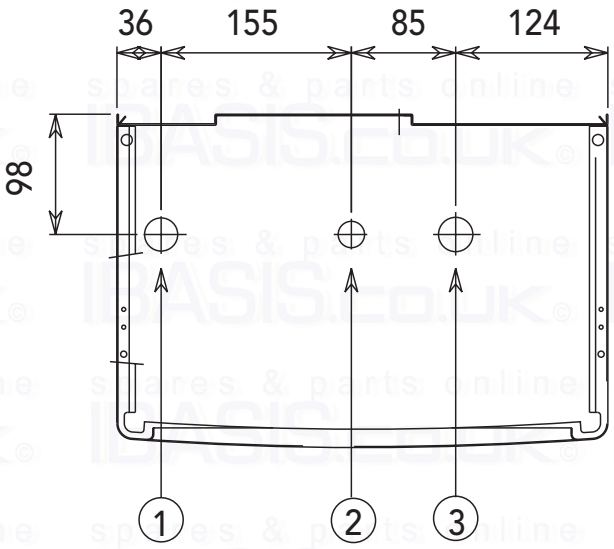

fig. 5

Key

1 Central heating outlet, 3/4"
2 Gas inlet, 1/2"
3 Central heating inlet, 3/4"

It is recommended to fit isolation valves between the boiler and the central heating system; these allow the boiler to be isolated from the heating system, if necessary.

⚠ The discharge of any safety valves must be routed to outside dicharging to ground level 100 mm from the floor so as not to create a danger to anyone passing. The manufacturer of the boiler will not be held liable if this warning is not heeded, and the discharge valve intervenes and floods the room.

Make the connections to the boiler in a way that its internal tubing is not subject to stress.

Water treatment

if water treatment is used Ferroli Ltd recommend only the use of Fernox or Sentinel water treatment products, which must be used in accordance with the manufacturers instructions. For further information contact:

Fernox Manufacturing Co. LTD.
Tandern house, Marlowe Way
Croydon, surrey, CRO 4YS
Tel. 02870 5601 5000

Sentinel Division
Betz Dearborn LTD
Widnes, Cheshire WA8 5351
Tel. 0151 424 5351

Note - If the boiler is installed in an existing system any unsuitable additives must be removed by thorough cleansing.
All systems should be cleansed according to B.S. 7593.

Note - In hard water areas treatment to prevent lime scale may be necessary.

VESSEL CHARGE PRESSURE (bar)	0.5			1.0		1.5
INITIAL SYSTEM PRESSURE (bar)	1.0	1.5	2.0	1.5	2.0	2.0
TOTAL WATER CONTENT of SYSTEM	EXPANSION VESSEL VOLUME (litres)					
Litres						
25	3.5	6.5	13.7	4.7	10.3	8.3
50	7.0	12.9	27.5	9.5	20.6	16.5
75	10.5	19.4	41.3	14.2	30.9	24.8
100	14.0	25.9	55.1	19.0	41.2	33.1
125	17.5	32.4	68.9	23.7	51.5	41.3
150	21.0	38.8	82.6	28.5	61.8	49.6
175	24.5	45.3	96.4	33.2	72.1	57.9
200	28.0	51.8	110.2	38.0	82.4	66.2
For syst. volumes other than those given above, must. the syst. volume by the factor across	0.140	0.259	0.551	0.190	0.412	0.33

Note - It is important that the correct concentration of the water treatment product is maintained in accordance with the manufactures instructions.

Filling the boiler and the system

The filling pressure, when the system is cold, must be around 1 bar (at least 0.5 bar). If the pressure drops during operation to a value lower than the minimum described above, the User must restore the initial value using the filling loop. For correct boiler operation, the pressure, when hot, must be around 1,5-2 bar. Once the operation is completed, always close the filling loop. This device is fitted to the system by the installer.

2.4 Gas connection

Before making the connections, check that the appliance is configured for operation with the type of fuel available, and carefully clean all the gas pipes in the system, to remove any residues that may affect the correct operation of the boiler.

The gas connections must be made using the relative coupling (see Fig. 5), according to the standards in force, with a rigid metal pipe, or a stainless steel flexible continuous-wall pipe, fitting a gas cock between the system and the boiler. Check that all the gas connections for soudness.
The capacity of the gas meter must be sufficient for the simultaneous use of all the connected appliances.
The diameter of the gas pipe, which leaves the boiler, does not necessarily determine the choice of the diameter of the pipe used between the appliance and the gas meter; this must be chosen according to its length and the pressure drop, according to the standards in force.

Do not use the gas pipes as the earth for electrical appliances.

2.5 Electrical connections

Connection to the mains power supply

The boiler should be connected to a single-phase, 230 Volt-50 Hz electrical line.

⚠ The electrical safety of the appliance is ensured only when the appliance is correctly connected to an effective earth system, as prescribed by the safety standards in force. Have professionally qualified personnel check the efficiency and the rating of the earth system. The manufacturer is not liable for any damage caused by the appliance not being correctly earthed. In addition, make sure that the electrical system is adequately rated for the maximum power absorbed by the appliance, indicated on the boiler rating plate, and in particular that the cross-section of the wires is suitable for the power absorbed by the appliance.

The boiler is pre-wired and fitted with a cable for connection to the electrical line. The connections to the mains supply must be made using a fixed connection, featuring a double-pole switch with a contact opening of at least 3 mm. Max 3A fuses must be installed between the boiler and the line. The correct polarity must be followed (LINE: brown wire / NEUTRAL: blue wire / EARTH: yellow-green wire) in the electrical connections.

⚠ The appliance's power cable must not be replaced by the user. In the event where the cable is damaged, turn off the appliance and contact professionally qualified personnel to replace it. If replacing the electrical power cable.
All wiring must conform to current I.E.E. Regulations

Accessing the electrical terminal block

Follow the operation shown in Figs. 6a and 6b to access the electrical terminal block. The layout of the terminals for the various connections is shown in the wiring diagram, in the chapter on Technical Specifications.

Fig. 6a

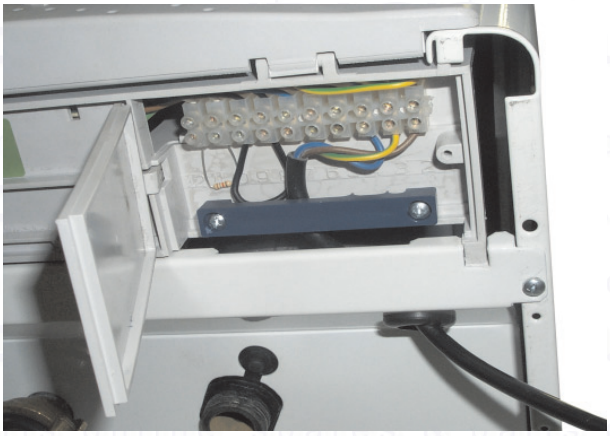

Fig. 6b

Room thermostat

⚠ WARNING: THE ROOM THERMOSTAT MUST HAVE 230V LIVE CONTACTS.

Standard Systems

For a general pipe layout and wiring diagram on the "S" and "Y" plan systems please see fig. 6A, 6B, 6C and 6D.

Tempra 12/18 "S" Plan

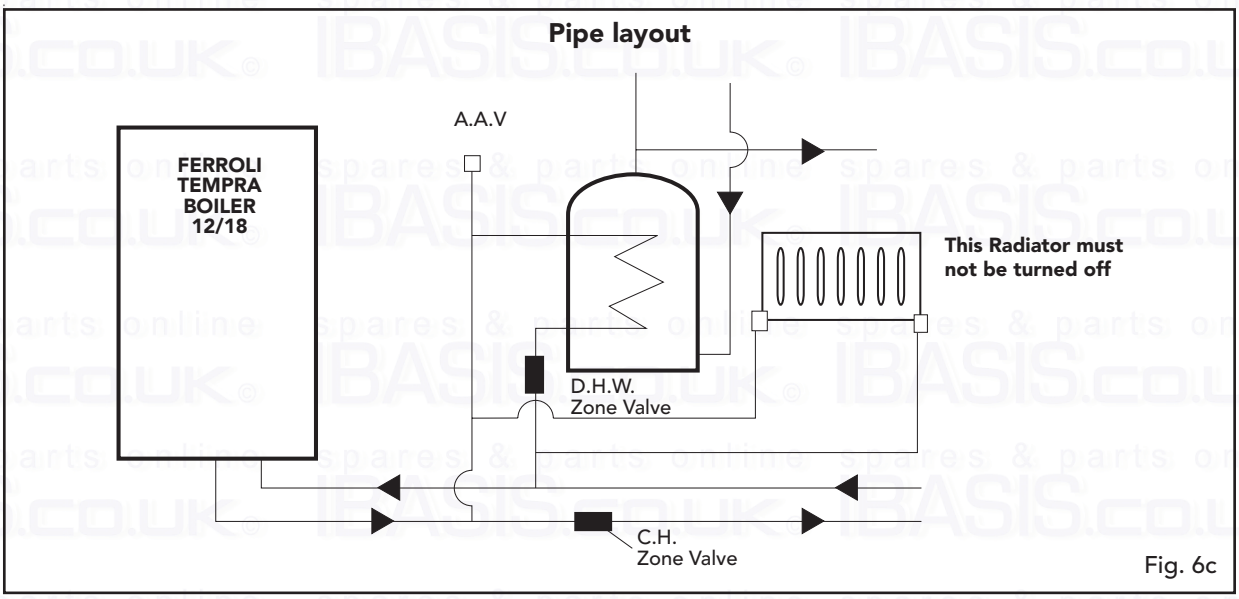

Fig. 6c

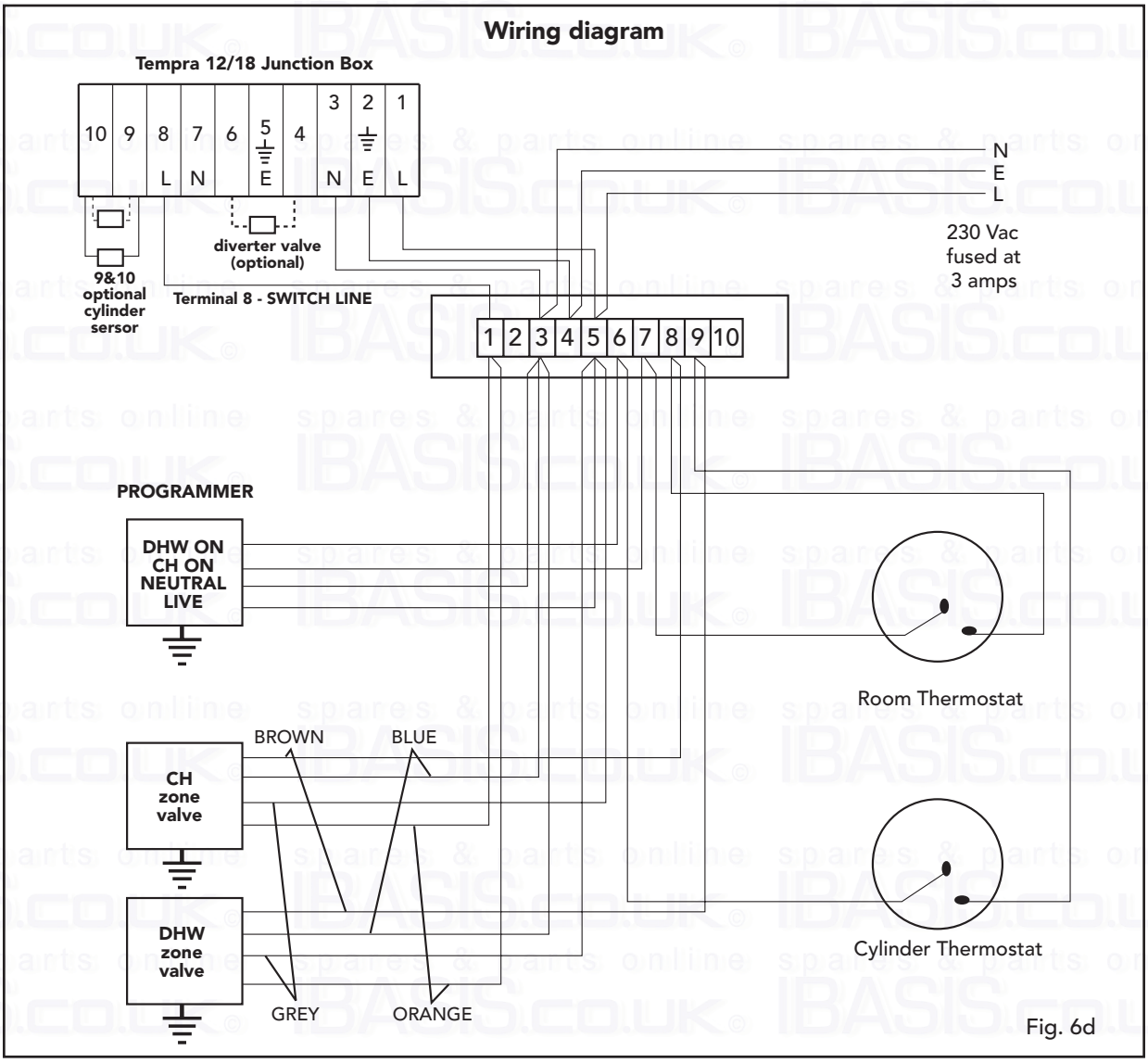

Fig. 6d

Tempra 12/18 "Y" Plan

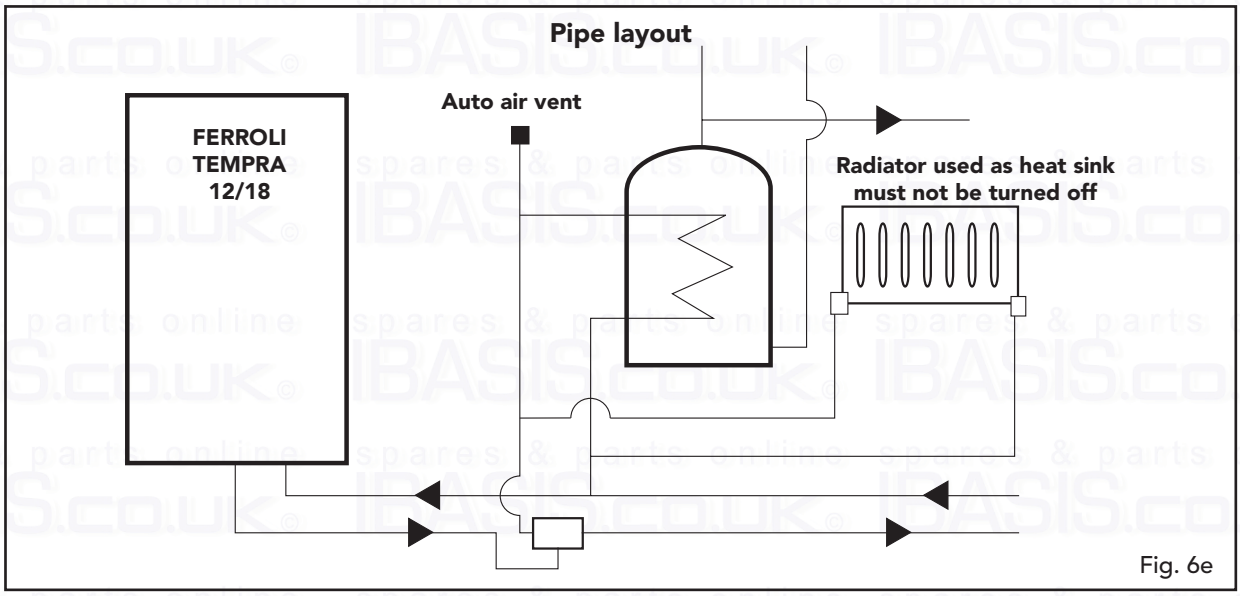

Fig. 6e

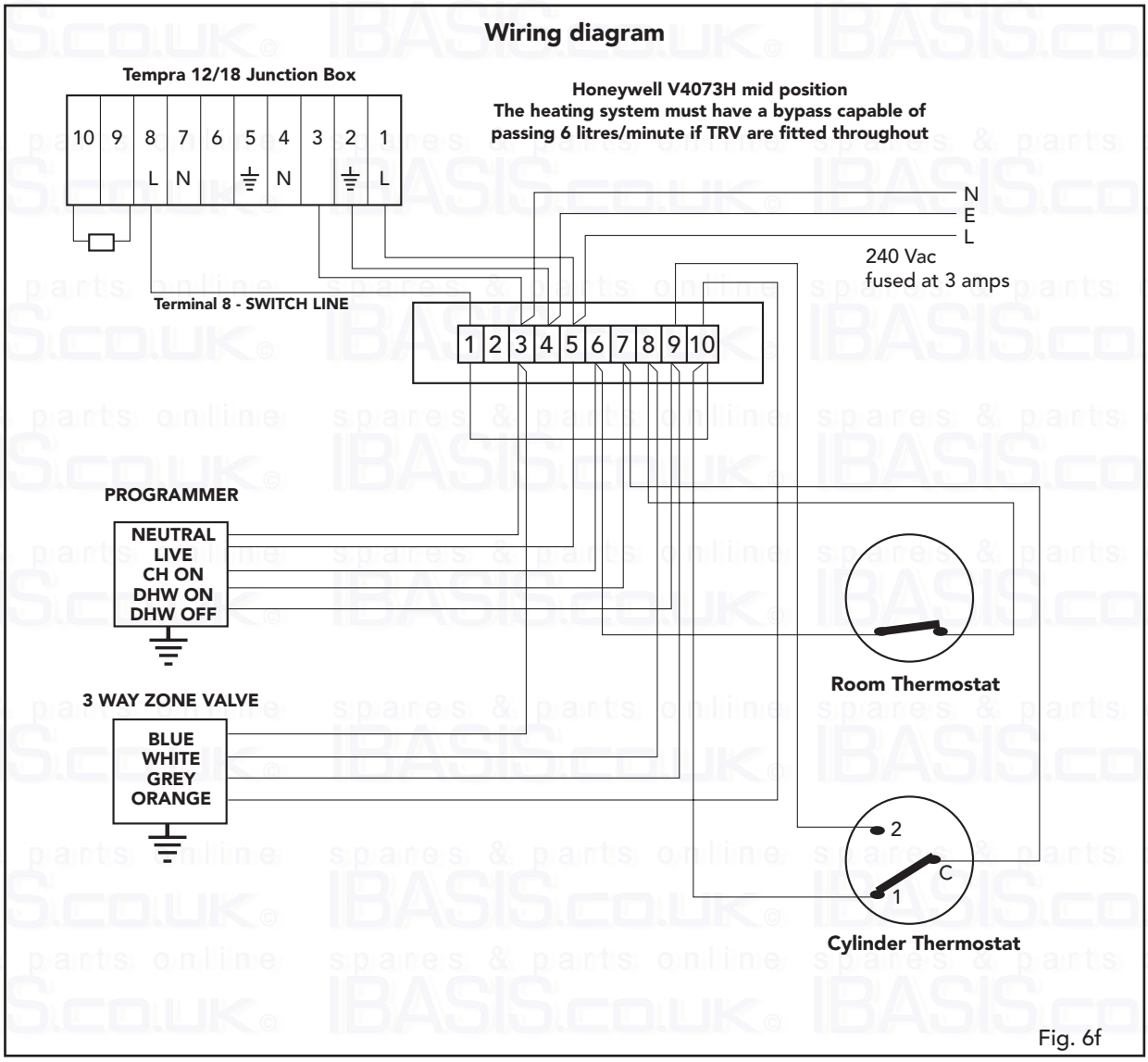

Fig. 6f

2.6 Flues connections

This is a "type C" **sealed** and forced draught appliance, and as such the air inlet and flue gas outlet must be connected to one of the exhaust/intake systems indicated below. Using the tables and the methods of calculation described, first verify, before installation, that the flues do not exceed the maximum allowed length. The standards in force and local legislation must be adhered to for terminal positions.

Restrictors

For the operation of the boiler, the restrictors supplied with the appliance must be fitted, according to the indications shown in the tables below.

Choice of the restrictors using concentric flue

Table 4a

Type	Length up to:	Restrictor to be used	
		Tempra 12	Tempra 18
60/100	1 bend + 1 metre	37 mm	43 mm
	1 bend + 3 metres		47 mm
80/125	1 bend + 3 metres	37 mm	43 mm
	1 bend + 4 metres		47 mm
	1 bend + 5 metres		

Choice of the restrictors using 2 pipe system

Table 4b

Total calculated flue lenght		Use restrictor	
Min	Max	Tempra 12	Tempra 18
0 m	10 m	37 mm	43 mm
10 m	15 m		
15 m	20 m		47 mm
20 m	30 m		
30 m	35 m		
35 m	40 m		
40 m	45 m		

Replacing the restrictor

To install or change the restrictor, remove the fan unit, remove the flue gas connecting pipe 1 (as shown in Fig. 8a) and insert the diaphragm 2 (as shown in Fig. 8b).

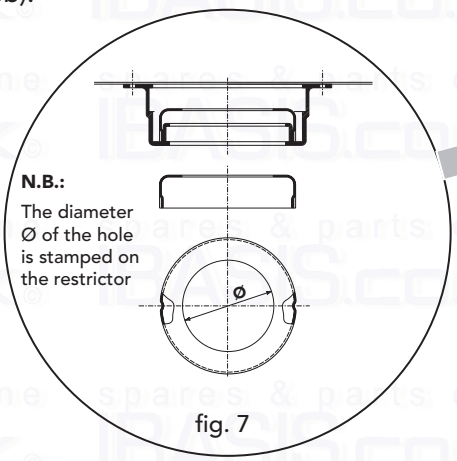

fig. 7

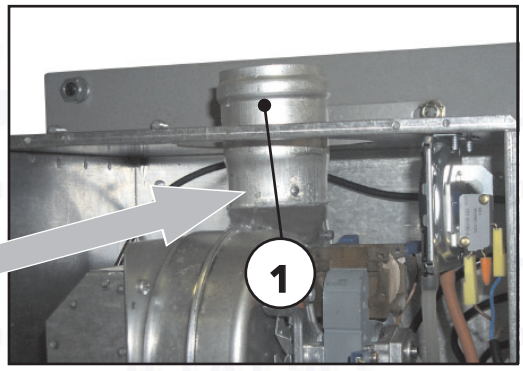

fig. 8a

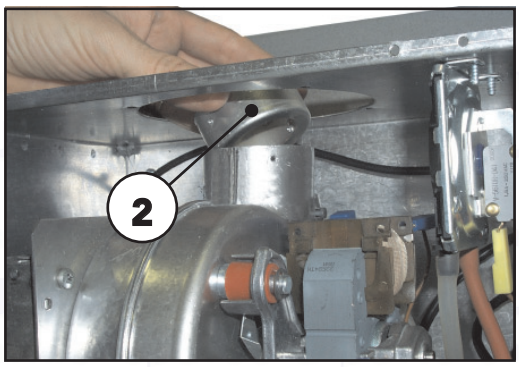

8b

☞ The Ø37 for Tempra 12 and Ø43 for Tempra 18 restrictor is fitted as standard on the boilers. Before inserting the flue gas outlet pipe, check that the correct restrictor is installed (when this needs to be used) and correctly positioned.

Connection using concentric flue

For side outlet or roof outlet concentric air/flue gas pipe can be connected directly to the top of the boiler, or a special back flue outlet kit is available for Rear outlet. Numerous accessories are available upon request for the various different installation requirements. Please refer to the flue accessories catalogue, or the price list.

Rear Outlet

Front view

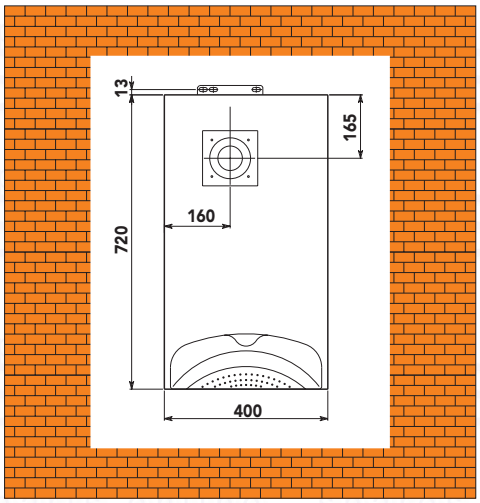

P = S + 85 mm

Top view

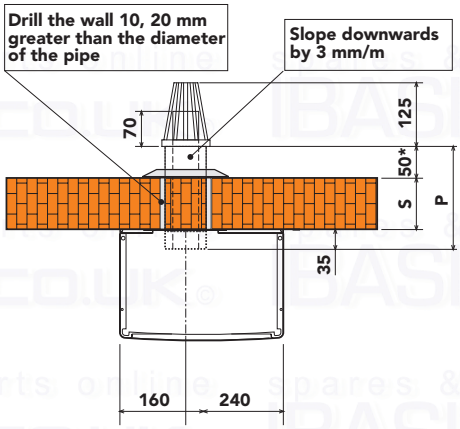

fig. 9a

Side Outlet

Front view

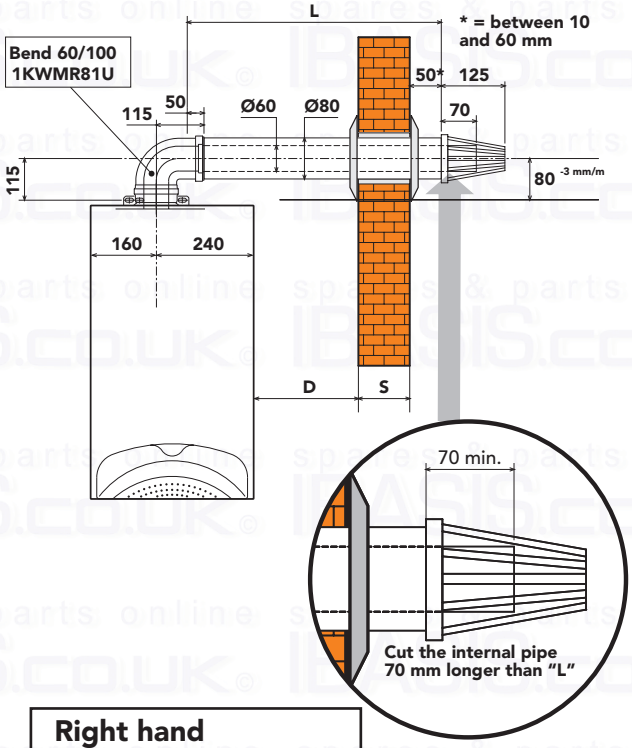

Right hand
L = S + D + 225 mm

Left hand
L = S + D + 145 mm

Top view

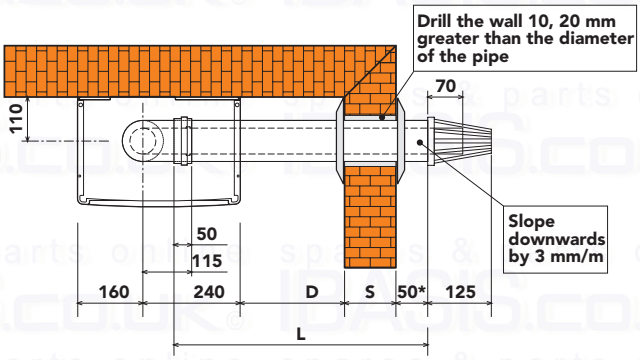

fig. 9b

The total length in linear metres of the concentric pipes must not exceed the maximum length indicated in the table below, considering that each bend gives rise to the reduction indicated. For example, a D= 60/100 pipe with 1 x 90° bend + 1 metre horizontal + 2 x 45° bends + 1 metre horizontal, has a total equivalent length of 4 metres.

Table 5a

	Ø mm 60/100	Ø mm 80/125	Rear outlet
Maximum allowed pipe length	4 m	5 m	1,00 m

Table 5b

Reduction factors for bends	
90° concentric bends - Ø 60/100 mm	1 m
45° concentric bends - Ø 60/100 mm	0,5 m
90° concentric bends - Ø 80/125 mm	0,5 m
45° concentric bends - Ø 80/125 mm	0,25 m

For installation (top flue connection):

1. Define the position for the installation of the appliance
2. Drill the wall for the passage of the air/flue gas pipe according to the references indicated in the figure, considering that the horizontal sections of pipe must have a downwards slope of around 3 mm per metre of length, to prevent any rainwater from entering the boiler.
3. Make a hole that is 10 - 20 mm greater in diameter than the rated diameter of the coaxial pipe used, to simplify its installation.
4. If necessary, cut the end of the pipes to measure, remembering that the outside part of the pipes must protrude from the wall by between 10 and 60 mm. Eliminate any burrs from the cut.
5. Connect the pipes to the boiler, placing the gaskets correctly, and seal the connections to the wall using the special seal couplings.

For installation (back flue connection):

For direct back flue connection it is necessary to use the optional kit 1KWMR04A, and it is required to alter the fan direction inside the boiler.
Follow carefully next procedure:

Vertical outlet

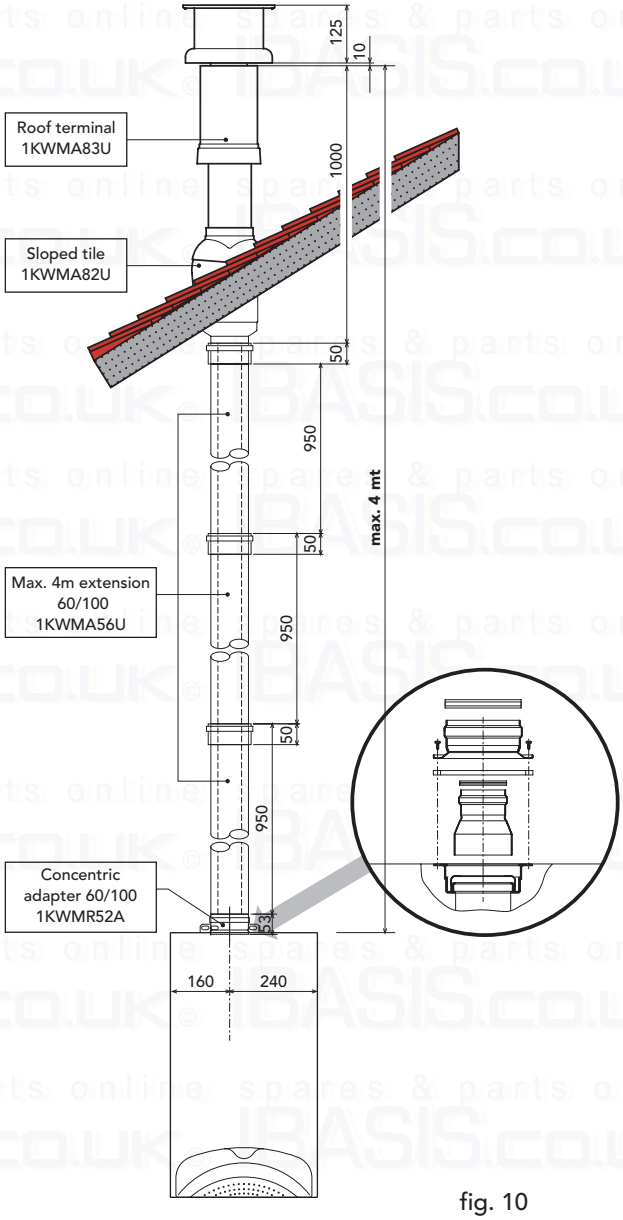

fig. 10

Remove fan by pulling off electrical connections. Pull off air pressure switch tubes from the air pressure switch remove 2 screws b. Rotate the fan downward to disengage it from the securing pin a.

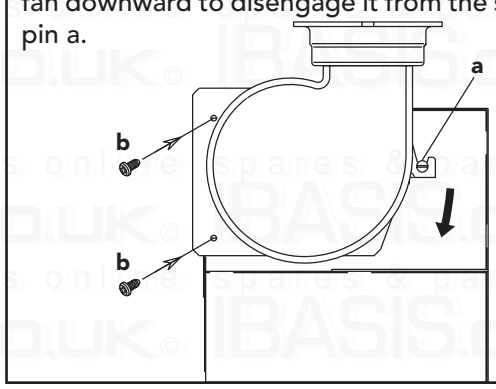

Fig. 11a

Take off the four screws which fix the back plate on sealed chamber, remove and rotate the plate through 90° and fit it to the top of the boiler to cover the original flue outlet. Secure it in place with the four screws removed previously.

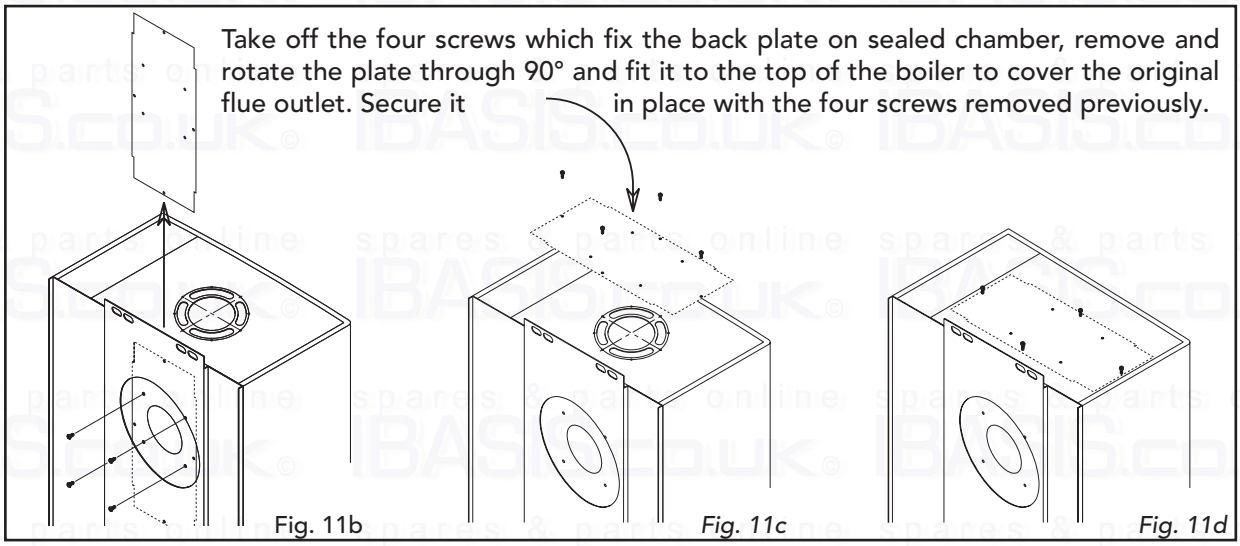

Fig. 11b Fig. 11c Fig. 11d

Remove fan mounting plate by undoing the three fixing screws d. Rotate the fan through 90° so that the fan nozzle points sideways. Secure the fan to the plate in the new position using screws in position c.

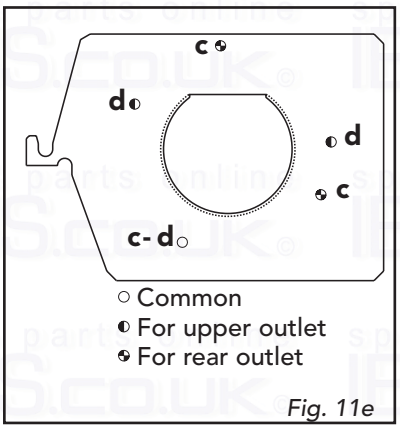

Fig. 11e

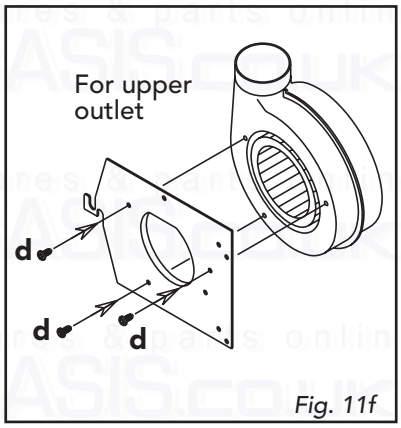

Fig. 11f

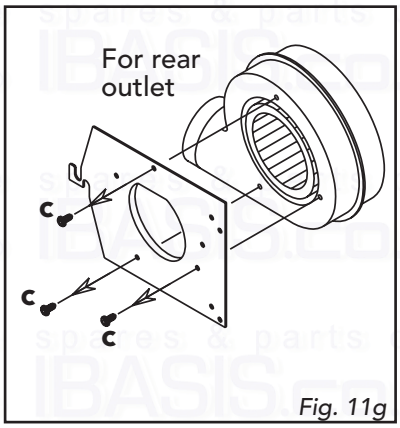

Fig. 11g

Fix with the screws (b). Refit wiring connections to fan and air pressure switch tubes ensuring correct orientation. I.E. red tube to air pressure switch connection with red dot (+) and clear tube to air pressure switch connection with no paint marking (-).
Fit the fan into the boiler rotating the front to engage with the pin a. Secure with the screws b.

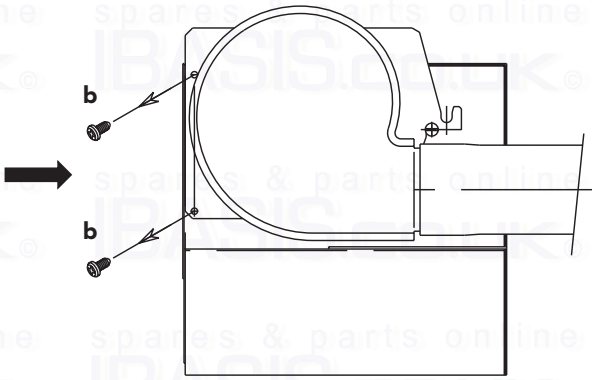

Fig. 11h

1. Core drill 127mm hole (5").

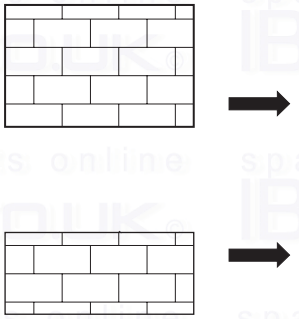

Fig. 11i

2. Push through the outer flue.

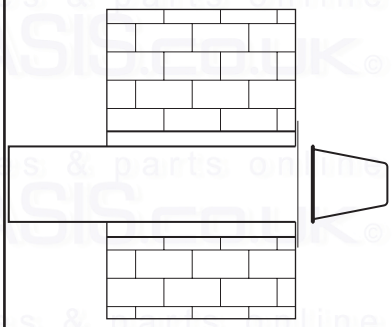

Fig. 11l

3. Gently pull back until wall seal is flush with the wall.

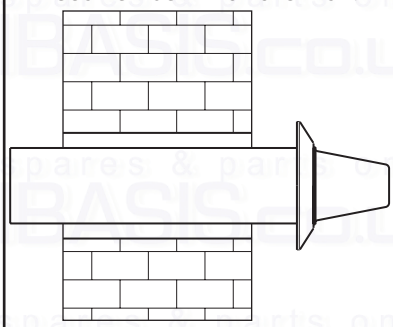

Fig. 11m

4. Place wall plate on outer flue ensuring it is level. Mark and drill four holes, two top, for expanding bolts and two bottom for plugs and screws. Fix plate to wall with the square gasket between the wall and the plate use the large diameter washers for the bolts and screws.

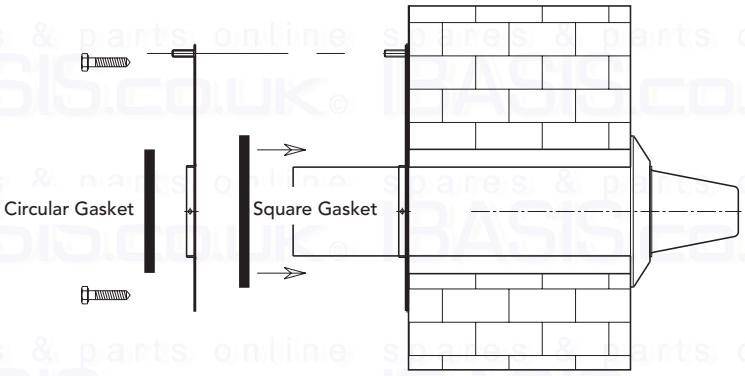

Fig. 11n

5. Through plate into air tube, drill two holes and fix in place using two self tapping screws M4 x 6mm long.

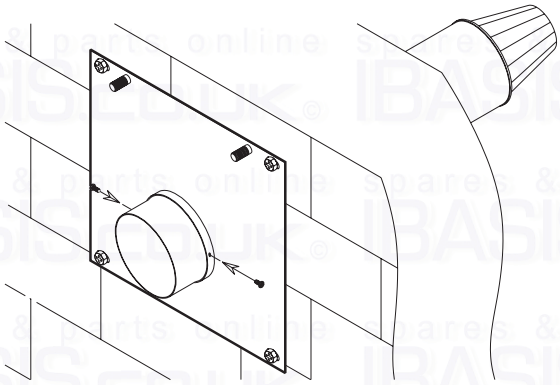

Fig. 11o

6. Cut the outer flue flush with the flange on the hanging plate.

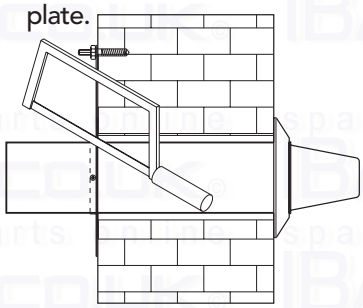

Fig. 1p

7. Insert the aluminium flue pipe into white plastic outer flue, making sure the aluminium pipe sits fully and centrally into the flue terminal. Mark the aluminium flue pipe at the point it is flush with the mounting plate. Add 36mm to this mark and cut the aluminium inner flue pipe at this point.

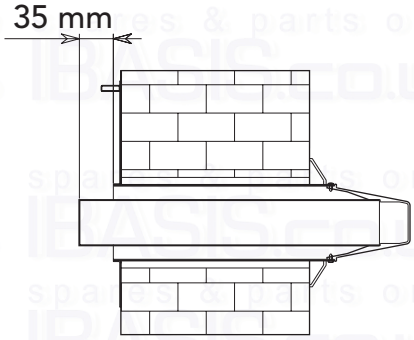

Fig. 11g

Connection using two pipe system

The appliance may be connected to a system of separate air/flue gas pipes with wall or roof outlet, as shown in drawings 14-15 to the side. Numerous accessories are available upon request for the various different installation requirements. The most frequently-used components are shown in Tables 7 - 8 - 9 -10. Please refer to the flue accessories catalogue or the price list for other components.
To check that the maximum allowed length of the pipes is not exceeded, a simple calculation must be performed before installation:

1. For each component, Tables 7 - 8 - 9 list a pressure drop in "equivalent air-metres", depending on the position of installation of the component itself (air intake or flue gas outlet, vertical or horizontal).
   This drop is called "equivalent air-metres" as it relates to the pressure drop of one metre of air intake pipe (defined as being equal to 1). For example, a 90° bend in a Ø80 flue gas outlet has a pressure drop equivalent to 2.5 air-metres, that is, equal to 2.5 linear metres of air intake pipe.

2. Once having completely defined the layout of the double flue system, add the pressure drops in equivalent-metres, according to the position of installation of all the components and accessories in the system.

3. Check that the total pressure drop calculated is less than or equal to **45 equivalent metres**, that is, the maximum allowable for this model of boiler.

☞ If the flue system chosen exceeds maximum allowable limit, some sections of the pipes should be larger in diameter.

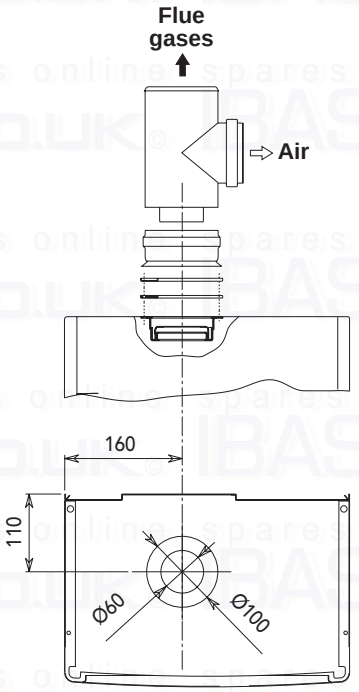

fig. 12

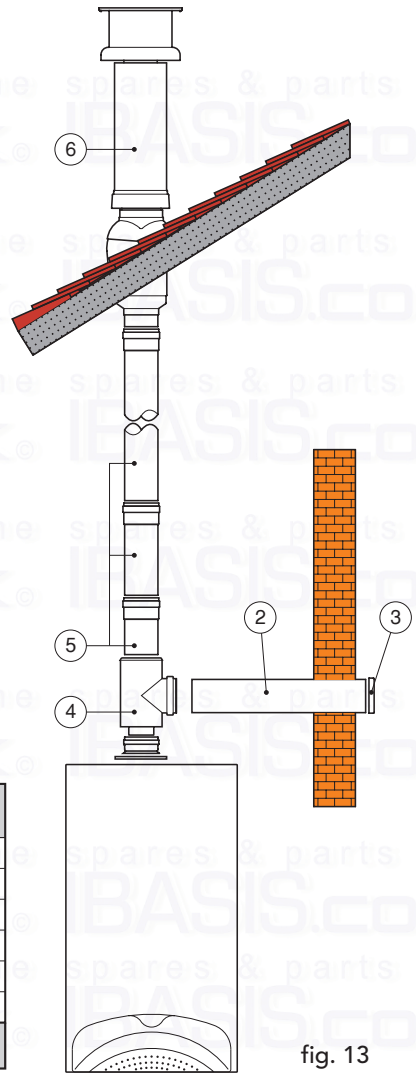

fig. 13

Table 6

Ref.	N° Pieces	Description	Equivalente pressure drop
1	1	Bend Ø80 air pipe	1,5 m
2	1	Horizontal Ø80 air pipe	1,0 m
3	1	Wind-protection terminal	2,0 m
4	1	T adaptor	included
5	33	Vertical Ø80 flue	33,0 m
6	1	Stack + connecting pipe	4,0 m
		Total	41,5 m

Pipes and fittings reduction table

Table 7

	Description	Reduction			
		Air		Flue	
		Vertical	Horizontal	Vertical	Horizontal
Accessories Ø 80	Male-female flue Ø80	1	1	1	2
	Female-female bend 45° Ø80	1,2		2,2	
	Female-female bend 90° Ø80	1,5		2,5	
	Male-female bend 90° Ø80	1,5		2,5	
	Pipe fitting M/M/F Ø80 with inspecting plug+trap for condensate drainage system			7	
	Condensate flue outlet			3	
	Spigot and socket reduction Ø80/100	0			
	Airwall terminal products of combustion Ø80				5
	Air terminal of inlet protection Ø80		2		

Table 8

	Description	Reduction			
		Air		Flue	
		Vertical	Horizontal	Vertical	Horizontal
Accessories Ø 80	Outlet flue air inlet for concentric system Ø80				
	Pipe fitting for outlet flue Ø80			4	
	Outlet flue air inlet for connection with split end Ø80	12			

Table 9

	Description	Air		Flue	
Accessories Ø 100	Male-female flue Ø100	0,4	0,4	0,4	0,8
	Male-female bend 45° Ø100	0,6		1	
	Male-female bend 90° Ø100	0,8		1,3	
	Air wall terminal products of combustion Ø100				3
	Air terminal of outlet protection Ø100		1,5		
	Spigot and socket reduction Ø 80/100	1,5		3	

The pressure drop values described refer to original Ferroli pipes and accessories.

Flue terminal positions

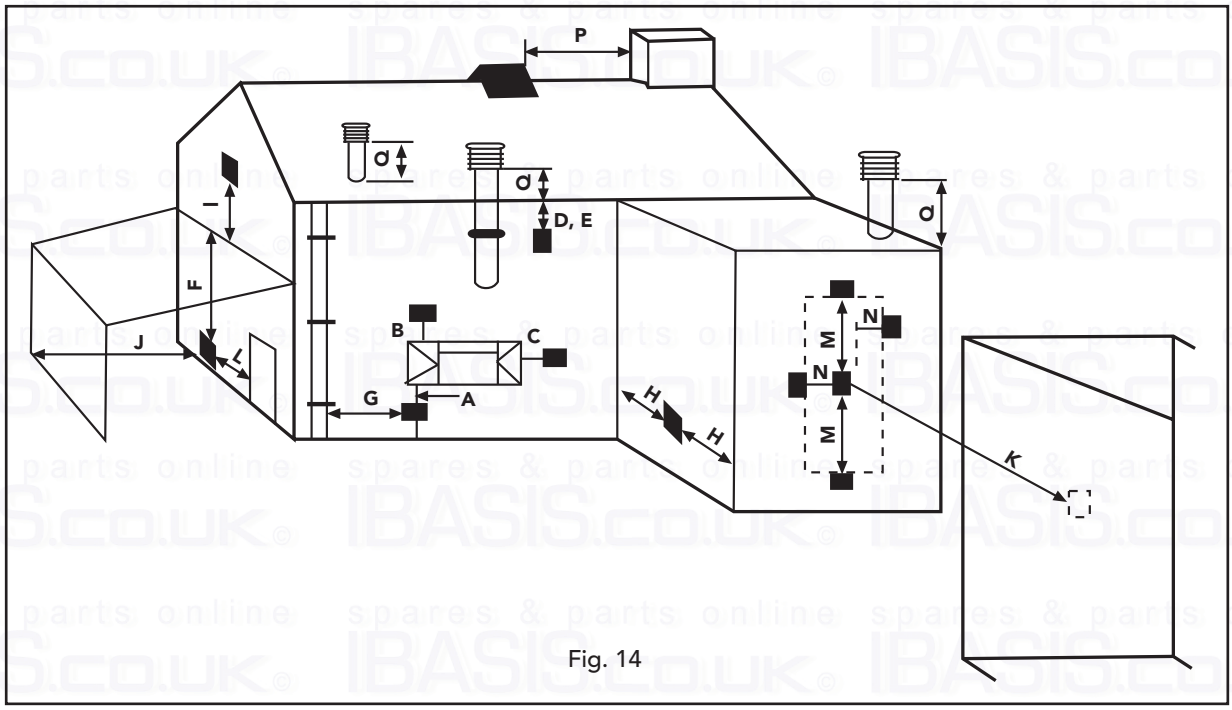

Fig. 14

Tab. 10 **Minimum dimensions of flue terminal positions (alltypes)(see fig. 14)**

Dimensions	Terminal position (kW input expressed in net)	Balanced flues room sealed		Open flues	
		Natural draught	Fanned draught	Natural draught	Fanned draught
A[a]	Directly below an opening, air brick, (0-7 kW) opening windows, etc. (>7-14 kW) (>14-32 kW) (>32-70 kW)	300 mm 600 mm 1500 mm 2000 mm	300 mm	Not allowed	300 mm
B[a]	Above an opening, air brick, (0-7 kW) opening windows, etc. (>7-14 kW) (>14-32 kW) (>32-70 kW)	300 mm 300 mm 300 mm 600 mm	300 mm	Not allowed	300 mm
C[a]	Horizontally to an opening, air brick, (0-7 kW) opening windows, etc. (>7-14 kW) (>14-32 kW) (>32-70 kW)	300 mm 400 mm 600 mm 600 mm	300 mm	Not allowed	300 mm
D	Below gutters, soil pipes or drain pipes	300 mm	75 mm	Not allowed	75 mm
E	Below eaves	300 mm	200 mm	Not allowed	200 mm
F	Below balconies or car port roof	600 mm	200 mm	Not allowed	200 mm
G	From a vertical drain pipe or soil pipe	300 mm	150 mm[b]	Not allowed	150 mm
H	From an internal or external corner	600 mm	300 mm	Not allowed	200 mm
I	Above ground roof or balcony level	300 mm	300 mm	Not allowed	300 mm
J	From a surface facing the terminal (also see 6.1.2)	600 mm	600 mm	N/A	600 mm
K	From a terminal facing the terminal	600 mm	1200 mm	N/A	1200 mm
L	From an opening in the car port (e.g. door, window) into the dwelling	1200 mm	1200 mm	N/A	1200 mm
M	Vertically from a terminal on the same wall	1500 mm	1500 mm	N/A	1500 mm
N	Horizontally from a terminal on the same wall	300 mm	300 mm	N/A	300 mm
O	From the wall on which the terminal is mounted	N/A	N/A	N/A	50 mm
P	From a vertical structure on the roof	N/A	N/A	See Table 2 and Fig. 6b	N/A
Q	Above intersection with roof	N/A	N/A	See Table 2 and Fig. 4	150 mm

NOTE N/A = Not applicable

[a] In addition, the terminal should not be nearer than 150 mm (fanned draucht) or 300 mm (natural draught) to an opening in the building fabric formed for the purpose of accommodating a built-in element such as a window frame, (see Figure C2). Separation distances are linked to the rated heat inputs as shown.

[b] This dimension may be reduced to 75 mm for appliances of up to 5 kW heat input.

3. SERVICE AND MAINTENANCE

3.1 Settings

All the adjustment and conversion operations must be performed by Qualified Personnel, such as personnel from the Local Customer Service Centre.
FERROLI Ltd. declines all liability for damage to persons and/or things deriving from tampering with the appliance by non-authorised persons
Conversion of supply gas
The appliance can operate on Natural Gas or LPG as the supply gas, and is factory configured for use with one of the two gases, as is clearly marked on the packaging and on the rating plate on the appliance itself. If the appliance has to be used with a gas other than the one it has been set for, the special conversion kit must be used, as shown below:

1 Replace the nozzles in the main burner, installing the nozzles indicated in technical data table in Chap. 4.4, according to the type of gas used
2 Adjust the minimum and maximum pressures in the burner (ref. corresponding paragraph), setting the values indicated in technical data table for the type of gas used.
3 Change the position of Jumper 02 on the electronic board (ref. corresponding paragraph).
4 Apply the adhesive label in the conversion kit next to the rating plate, to confirm the conversion operation.

Adjusting the burner pressure

This appliance, featuring flame modulation, has two set pressure values: the minimum and maximum, which must be the values indicated in technical data table, according to the type of gas.

- Connect a suitable pressure gauge to the pressure test point **"B"**, located downstream of the gas valve.
- Disconnect the pressure compensation pipe **"F"**.
- Remove the protection cap **"C"**.
- Turn the potentiometer **P3** (located on the control board) to the minimum position (clockwise).
- Operate the boiler in central heating mode.
- Adjust the minimum pressure using the screw **"D"**, clockwise to decrease it and anticlockwise to increase.
- Turn the potentiometer **P3** to the maximum position (anticlockwise).
- Adjust the maximum pressure using the screw "E", clockwise to increase it and anticlockwise to decrease it.
- Reconnect the pressure compensation pipe **"F"**.
- Replace the protection screw **"C"**.

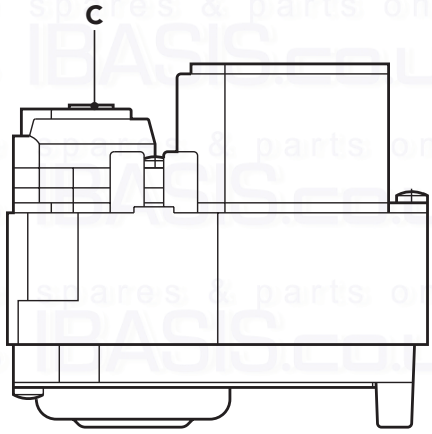

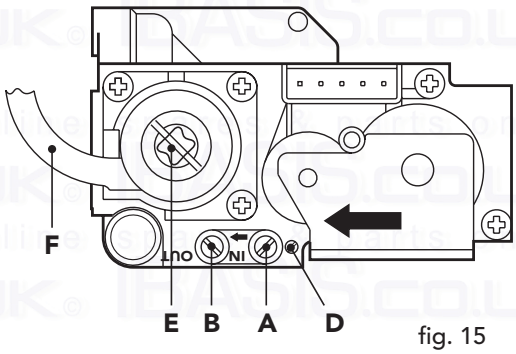

fig. 15

Key

A	Pressure test point upstream
B	Pressure test point downstream
C	Protection screw
D	Minimum pressure adjustment screws
E	Maximum pressure adjustment screws
F	Pressure compensation pipe

Adjustments on the electronic board

Follow the indications shown in the figure to access the electronic board.

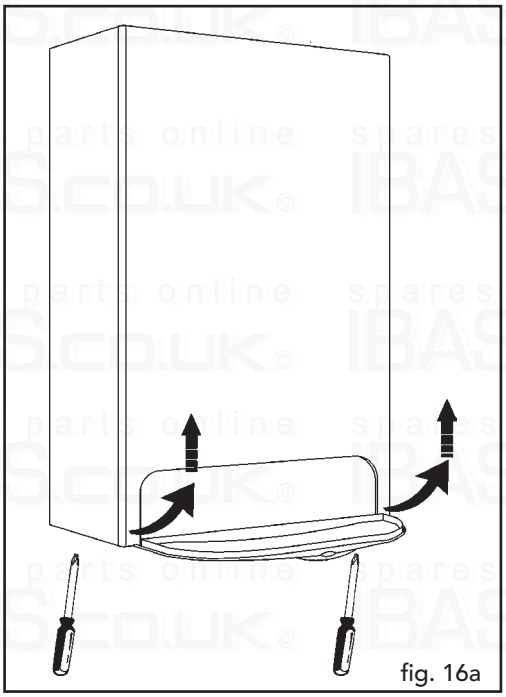

fig. 16a

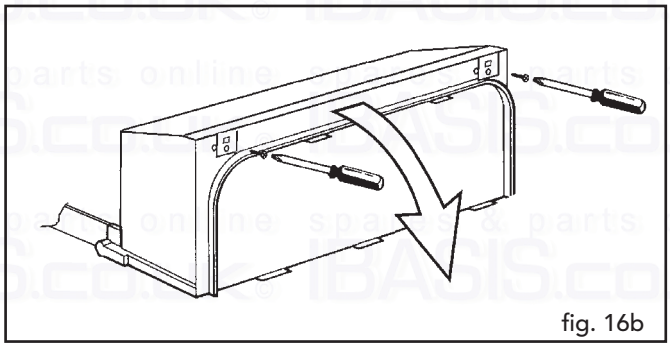

fig. 16b

Potentiometer position and functions
P1 = Central heating temperature adjustment
P2 = Domestic hot water temperature control
P3 = Heating output adjustment
P4 = Gas pressure adjustment for ignition
P5 = Minimum gas pressure adjustment

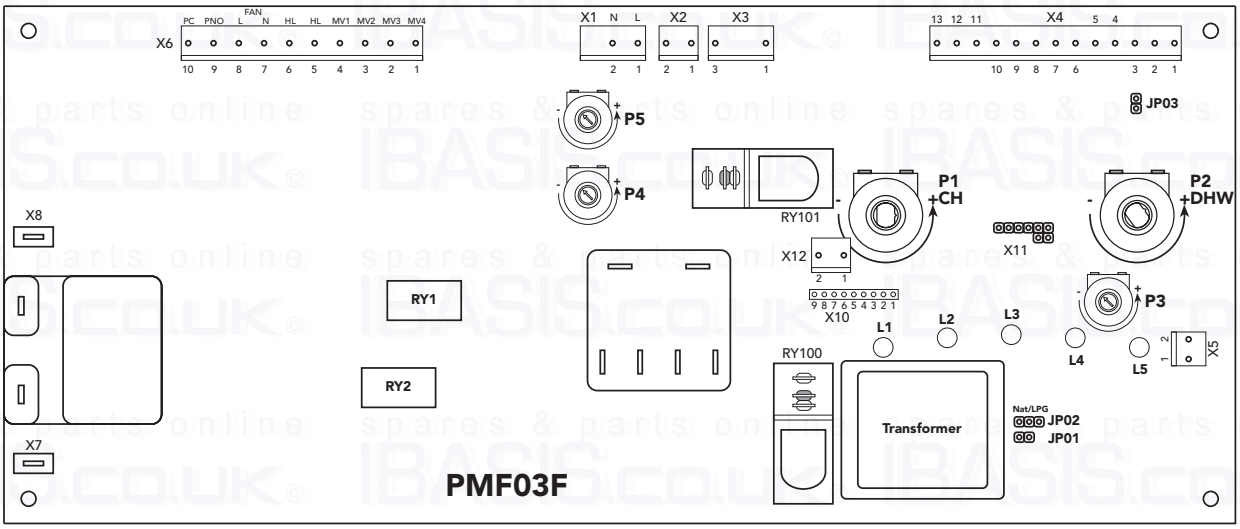

fig. 17

Jumper adjustment

JP01 inserted	=	Diverting valve System
JP01 not inserted	=	Not able

JP02:

Jumper inserted for natural gas operation

Jumper inserted for LPG operation

Adjusting the maximum heating output (not normally required)

This adjustment may only be performed electronically using the adjustment potentiometer "P3", starting with cold heating system.
Connect a suitable pressure gauge to the pressure test point B located on the gas valve; turn the temperature control knob to the maximum value, then adjust the pressure to the value required, using the pressure-output diagram in the chapter on technical specifications. Once this operation has been completed, turn the burner on and off 2 or 3 times using the thermostat and check that the pressure remains stable at the set value. If not, a further fine adjustment must be performed, until the pressure remains stable at the set value. When the burner is ignited to check the calibration pressure, turn the setting thermostat knob to the maximum value, otherwise the procedure will be incorrect.

Adjusting the heating Δt by varying the flow-rate/discharge head of the pump

The thermal head, Δt (difference between the central heating outlet and inlet temperature) must be less than 20°C. This is checked by varying the flow-rate and discharge head of the pump, using the speed control (or switch) on the pump itself. Note that increasing the speed of the pump decreases the Δt, and vice-versa.

3.2 Commissioning

⚠ The appliance must only be commissioned for use by Qualified Personnel,

Before igniting the boiler:

- Open any on-off valves between the boiler and systems.
- Check the gas system for soundness, proceeding with care and using a leak detection water solution to find any leaks from the connections.
- Fill the system with water and ensure that the air contained in the boiler and the system has been completely vented, by opening the air vent valve on the boiler and any vent valves in the system.
- Check that there are no water leaks in the heating system, in the domestic hot water circuits, in the connections or in the boiler.
- Check the correct connection of the electrical system.
- Check that the appliance is properly earthed.
- Check that the pressure value and gas rate for the heating system are correct.
- Check that there are no flammable liquids or materials in the immediate vicinity of the boiler.

Igniting the boiler

- Open the gas isolation valve upstream of the boiler.
- Vent the air in the pipe upstream from the gas valve.
- Close any switches or insert any plugs upstream of the boiler
- Place the main switch in the ON position.
- Place knob "B" in the Winter position to a value higher than 50°C and set the room thermostat, if fitted, to the required temperature value. At this point, the burner will ignite and the boiler will start operating automatically, managed by its control and safety devices.
- Checking gas inlet pressure
  - Connect a pressure gauge to inlet tet point;
  - Fire the Boiler and set at full gas rate by turning P3 to maximum (anticlockwise);
  - Check the pressure gauge is reading 20 mbar (+/-1 mbar);
  - Check that this pressure remains as above with any other gas appliances in the house turned on;
  - If the pressure is below this reading it should be investigated before continuing as this is a sign of an incorrect or partially blocked gas supply;
  - Turn-off appliance;
  - Remove pressure gauge, tihten test point and test with leak detection fluid.

If, after correctly having performed the ignition operations, the burners do not ignite and the shut-down warning light is on, wait around 15 seconds and then turn knob "A" (Fig. 1) to the RESET position and release it. The control unit will be reset and will repeat the ignition cycle. If, after a number of attempts, the burners do not ignite, refer to the paragraph "Troubleshooting".

In the case of power failures while the boiler is in operation, the burners will switch off. When mains power returns, the burners will automatically re-ignite.

Checks during operation

- Check the gas supply and the water system for tightness.
- Check the efficiency of the flues and air-flue gas pipes during the operation of the boiler.
- Check that the water circulation between the boiler and the systems is correct.
- Ensure that the gas valve modulates correctly both in the central heating phase and the production of domestic hot water.
- Check the correct ignition of the boiler, by performing a series of ignition and shut-down tests using the room thermostat or the remote control.
- Ensure that the consumption of gas indicated by the counter corresponds to the values shown in the technical data table in Chap. 4.

Shut-down

Close the gas isolation valve upstream of the boiler and disconnect the appliance from the mains power supply.

For extended periods of inactivity during the winter months, in order to avoid damage due to freezing, all the water should be drained from the boiler, both the domestic hot water and the central heating system; alternatively, drain only the domestic hot water and place the special antifreeze fluid in the central heating system.

3.3 Maintenance

The following operations must only be performed by Qualified Personnel

Seasonal checks on the boiler and the stack

The following checks should be made on the appliance at least once a year:

- The control and safety devices (gas valve, flow-meter, thermostats, etc.) must be working properly.
- The pipes and the air-flue gas terminals must be free of obstacles and not have any leaks.
- The water systems must be perfectly tight and the gas supply sound.
- The burner and the heat exchanger must be clean. Follow the instructions in the next paragraph.
- The electrodes must be free of deposits and positioned correctly.
- The pressure of the water in the system when cold must be around 1 bar; if not, restore this value.
- The expansion vessel must be full.
- The gas rate and the pressure must correspond to the values indicated in the corresponding tables.
- The circulation pumps must not be blocked.

Opening the casing

To open the boiler casing:

1 Using a screwdriver, completely remove the 2 screws, **"A"**
2 Open the control panel **"B"** by pulling down
3 Unscrew the 2 screws **"C"**
4 Remove the casing **"D"**.

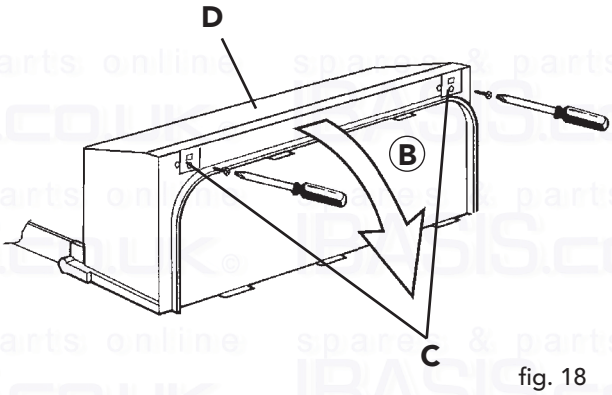

fig. 18

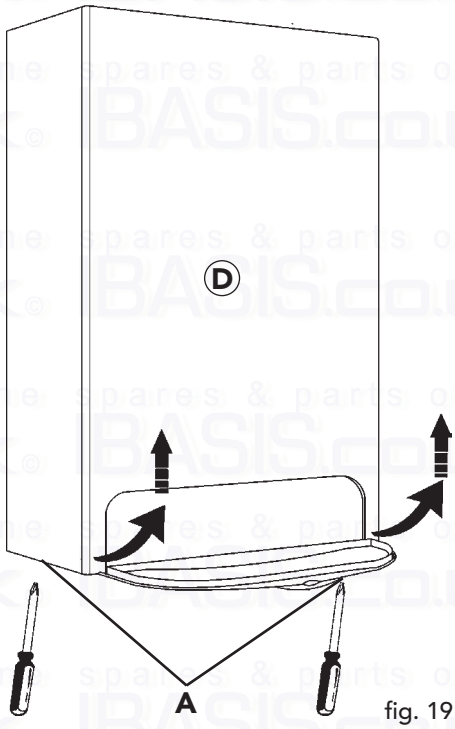

fig. 19

Cleaning the boiler and the burner

The body and the burner must not be cleaned using chemical products or steel brushes. Special care must be taken to ensure all the systems relating to the sealed compartment are tight (gaskets, cable glands, etc..), to avoid air leaks which, causing a drop in the pressure inside in chamber, may activate the differential pressure switch and thus shut-down the boiler. Special attention must also be paid, after all the operations have been completed, to checking and performing all the ignition phases and operation of the thermostats, gas valve and circulation pump.

⚠ After these checks, ensure that there are no gas leaks.

Analysis of combustion

Two test points are installed inside the boiler, one for the flue gases and the other for the intake air.
To make the measurements, proceed as follows:

1) Remove the boiler casing
2) Open the air and flue gas sample points in the sealed compartment;
3) Insert the probes as far as possible;
4) Open a hot water tap;
5) Adjust the domestic hot water temperature to the maximum setting.
6) Wait 10-15 minutes to allow the boiler to reach stable operating conditions*
7) Take a reading with your flue gas analyser.
8) CO/CO2 ratio should be 0.004 or below. If above a full service is required to find the cause and then RE-TEST.
9) Following a full service the permissible reading is now 0.008 or below.

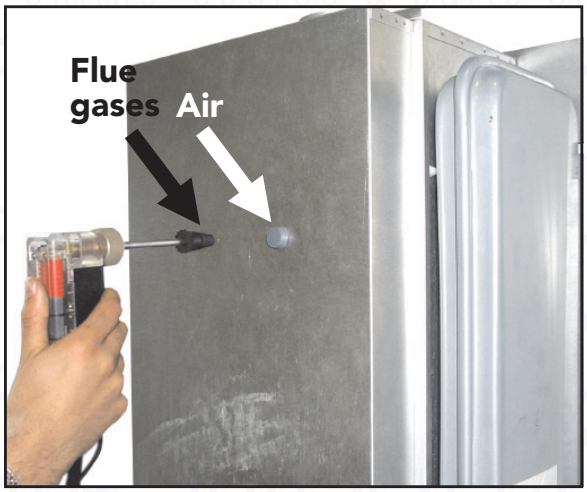

fig. 20

☞ Testing before thermal equilibrium has been reached will give incorrect readings.

3.4 Replacement of Parts

Initial procedure

a) The boiler is cold, electricity supply is isolated, and the gas supply is turned off at the inlet of the boiler

b) For replacement of parts where water connections are broken, it will be necessary to isolate and drain either or both the central heating or domestic hot water circuits of the boiler only. The cold water mains inlet is isolated at the inlet isolation valve. The D.H.W. is drained by opening a hot tap.
The C.H. flow and return cocks are turned off at the isolation valve.

c) Remove components following special notice below and replace in reverse order.

d) Ensure water and gas washers are in good condition.

Final procedure

- Re-open valve and re-charge the system to about 1 bar, and vent boiler and radiators. Re-charge to 1 bar if necessary.
- Upon completion of the work the following. Should be checked:
  I) Gas soundness of all joints
  II) Water soundness of all joints
  III) The electricity supply.
  IV) The pressure of the sealed system and top up where necessary.

To lower the control panel (fig. 21)

- Remove the two fixing screw (fig. 21) "A"
- Lift the two metal brackets "B"
- Rotate down the front panel "C"

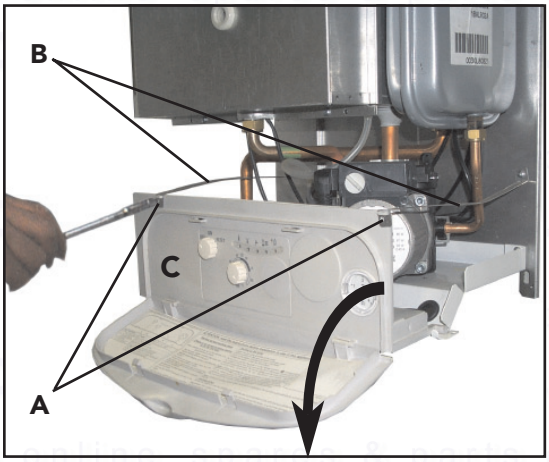

Fig. 21

Remove and re-presurising of C.H. expansion vessel (fig. 22)

- Refer to initial procedure a, b
- Isolate electricity and water supplies
- Remove outer case (two screws bottom rear corners)
- Loosen the "A" connections to expansion vessel
- Remove "B" screw
- Remove the expansion vessel
- Re-assemble in reverse order
- Re-pressure expansion vessel (charge pressure 0,8-1 bar)
- Re-fill system to 1 - 1.5 bar
- Check for leaves

Fig. 22

Gas valve (fig. 23)

- Isolate gas and electricity supplies
- Remove outer case (two screws bottom rear corners)
- Remove the two securing screws and lower control panel
- Disconnect electrical connections from valve ("A")
- Disconnect plastic tube "C"
- Loosen the connection "D" on gas pipe and the gas inlet connection of the boiler "E"
- Remove the two fixing screw "E" below gas valve
- Slide out gas valve
- Remove four fixing screw "F" on top of the valve and disconnect the gas pipe
- Remove bottom connection from gas valve.
- Fit top + bottom gas connections to the new gas valve and replace in reverse order
- Check operation and gas pressures

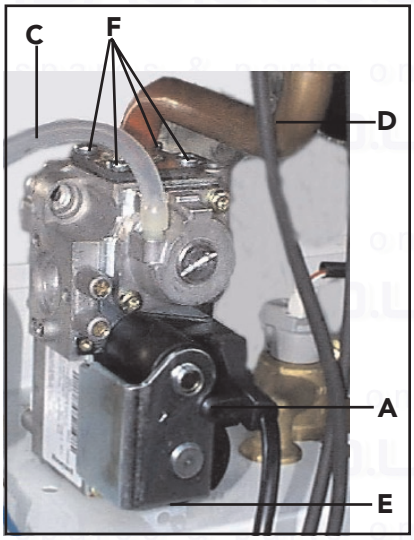

Fig. 23

Air pressure switch (fig. 24)

- Isolate electricity
- Remove outer case (two screws bottom rear corners)
- Open room sealed compartment
- Remove the two screw "A" fixing air pressure switch
- Disconnect electrical leads "B"
- Remove pressure sensing tubes (white=D; Red=C)
- Note relevant positions of all connections and replace in reverse order.
- Re-instate power and test - P/D 1.15 mb

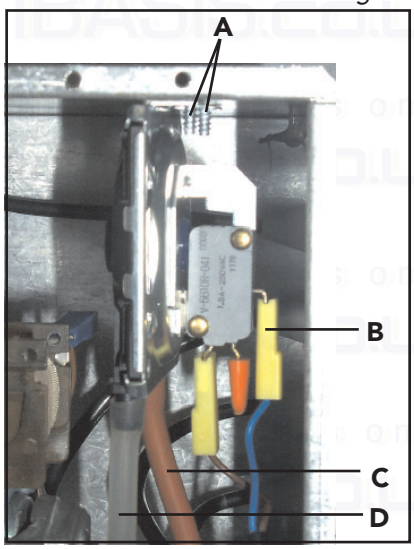

Fig. 24

Central Heating Temperature Sensor (fig. 25)

- Isolate electricity and water supplies
- Remove outer case (two screws bottom rear corners)
- Remove the two securing screws and lower control panel
- Identify the sensor from figure 24
- Disconnect electrical connection to the sensor
- Drain the affected service either D.H.W. or C.H.
- Unscrew the sensor, do not leak water onto P.C.B.
- Replace in reverse order

Safety Valve (fig. 25)

- Isolate electricity and water supplies
- Remove outer case (two screws bottom rear corners)
- Remove the two securing screws and lower control panel
- Identify valve from fig. 25
- Drain the boiler
- Release the outlet union to the valve and undo the valve union connection
- Remove the valve outlet fitting
- Replace in reverse order
- Refill to 1 - 1.5 bar and TEST

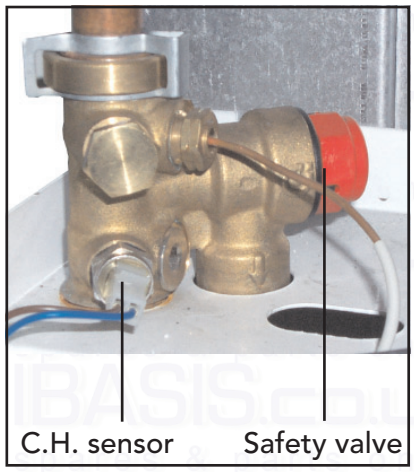

Fig. 25

Removal of burner (fig. 26)

- Isolate gas and electricity supplies
- Remove outer case (two screws bottom rear corners)
- Remove room sealed cover
- Disconnect ignition and flame rectification leads "A"
- undo gas rail union "B"
- Undo two screws securing the burner assembly to the boiler combustion chamber "D"
- Withdraw the burner assembly

Injectors (fig. 26)

- Isolate gas and electricity supplies
- Remove outer case (two screws bottom rear corners)
- Remove room sealed cover
- Remove fixing screw "C" on both sides of gas collector
- Remove gas collector
- Unscrew and remove injectors;
- Clear or change injectors

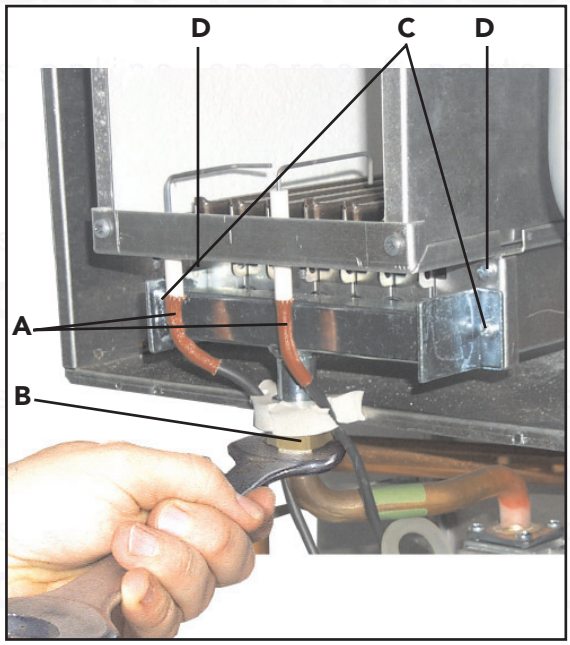

fig. 26

Removal of fan (fig. 27)

- Isolate gas and electricity supplies
- Remove outer case (two screws bottom rear corners)
- Remove room sealed cover
- Disconnect fan electrical leads "A"and note positions
- Disconnect air pressure tubes from air pressure switch "B" + note positions
- Undo two screws securing fan assembly "C"
- Remove fan from boiler
- Swap mounting plate over to new fan + replace in reverse order

Limit thermostat, or overheat cut off thermostat (fig. 27)

- Isolate electricity
- Remove outer case (two screws bottom rear corners)
- Remove room sealed cover
- Identify the location of thermostat from fig. 27
- Pull out thermostat from tube, with its spring
- Remove electrical connections from thermostat
- Remove spring from thermostat
- Replace in reverse order using heat paste on face of new stat

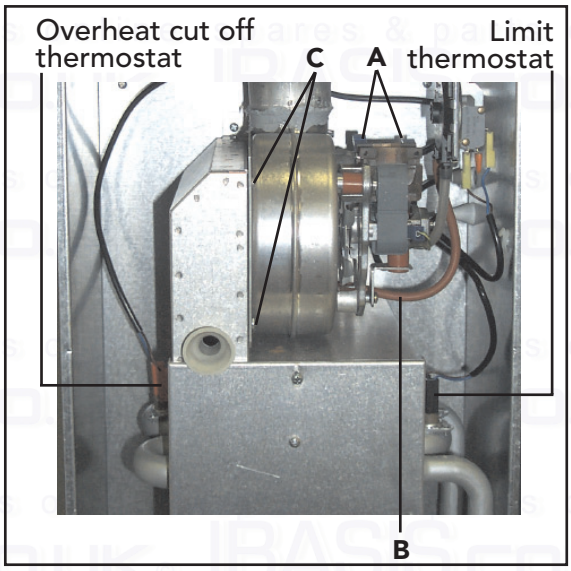

Fig. 27

Spark or flame detect electrode (fig. 28)

- Isolate gas and electricity supply
- Remove outer case (two screws bottom rear corners)
- Open room sealed compartment and combustion chamber
- Identify electrode from fig. 28
- Unplug electrical connection "A" from sensing electrode
- Remove fixing screw and remove flame detect electrode
- Remove the two fixing screw from spark electrode plate and remove it.
- Replace in reverse order, spark gap 3.5 mm

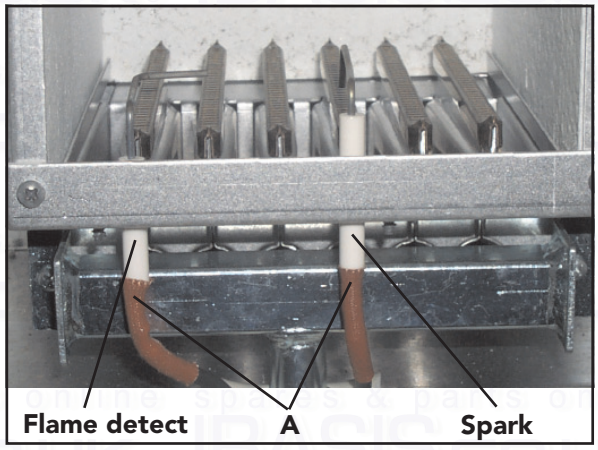

Fig. 28

Pump (fig. 29)

Replacement of pump head

- Isolate electricity and flow and return pipes
- Remove casing (two screws bottom rear corners).
- Remove the two securing screws and lower control panel
- Release pressure from boiler via suitable drain point
- Unplug the pump lead "A" from the pump head
- Place a piece of cloth or other absorbent material over the rear of the control panel to catch any drops of water that may fall when the pump head is removed.
- Using a 4mm allen wrench undo the four allen screws "B" in the pump head, lift away pump head from the pump body
- fit new head into pump body and secure with the allen screws tightening evenly.
- Replace electrical connection.
- Refill system and vent pump

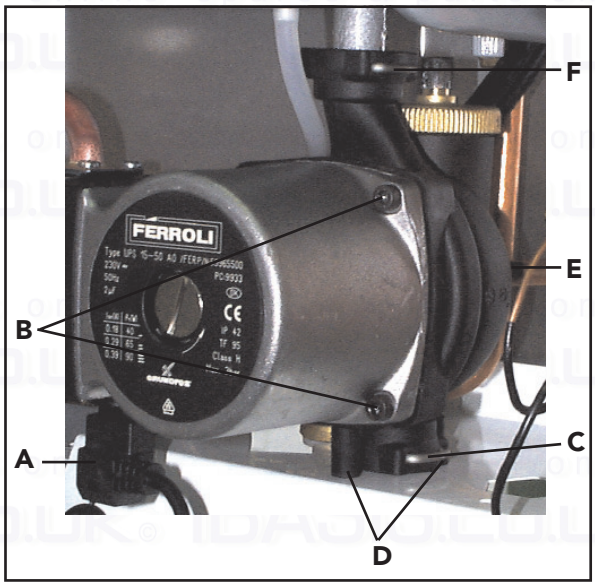

Fig. 29

Replacement of pump body (fig. 29)

- Proceed as for removal of pump head
- Disconnect the expansion vessel connecting pipe "E" from the rear of the pump body by removing the U clip from the left hand side
- Disconnect the boiler return pipe and disengage the pump lower connection by removing the U clip "C"
- Disconnect the pump to heat exchanger connection by removing the U clip "F"
- Unscrew the two screws on bottom of pump "D"
- Turn the pump body through 90°, pull the bottom forward and withdraw the pump body
- Reassemble in reverse order taking care to ensure the O-rings are in place and undamaged.
- Refill system and vent pump

Removal of heat exchanger

- Isolate gas, water and electricity supplies
- Remove casing (2 screws bottom corners)
- Remove the two securing screws and lower control panel
- Drain the boiler
- Remove sealed compartment front panel
- Disconnect the overheat thermostat and central heating limit thermostat
- Remove the main burner, fan, flue hood as described previously
- Remove the pump to heat exchanger flow connection and locknut
- Lift out heat exchanger
- Re-assemble in reverse order
- Refill and TEST

3.5 Troubleshooting

Flow Diagram 1
Checking Power Supply-System Pressure and Anti-freeze Protection

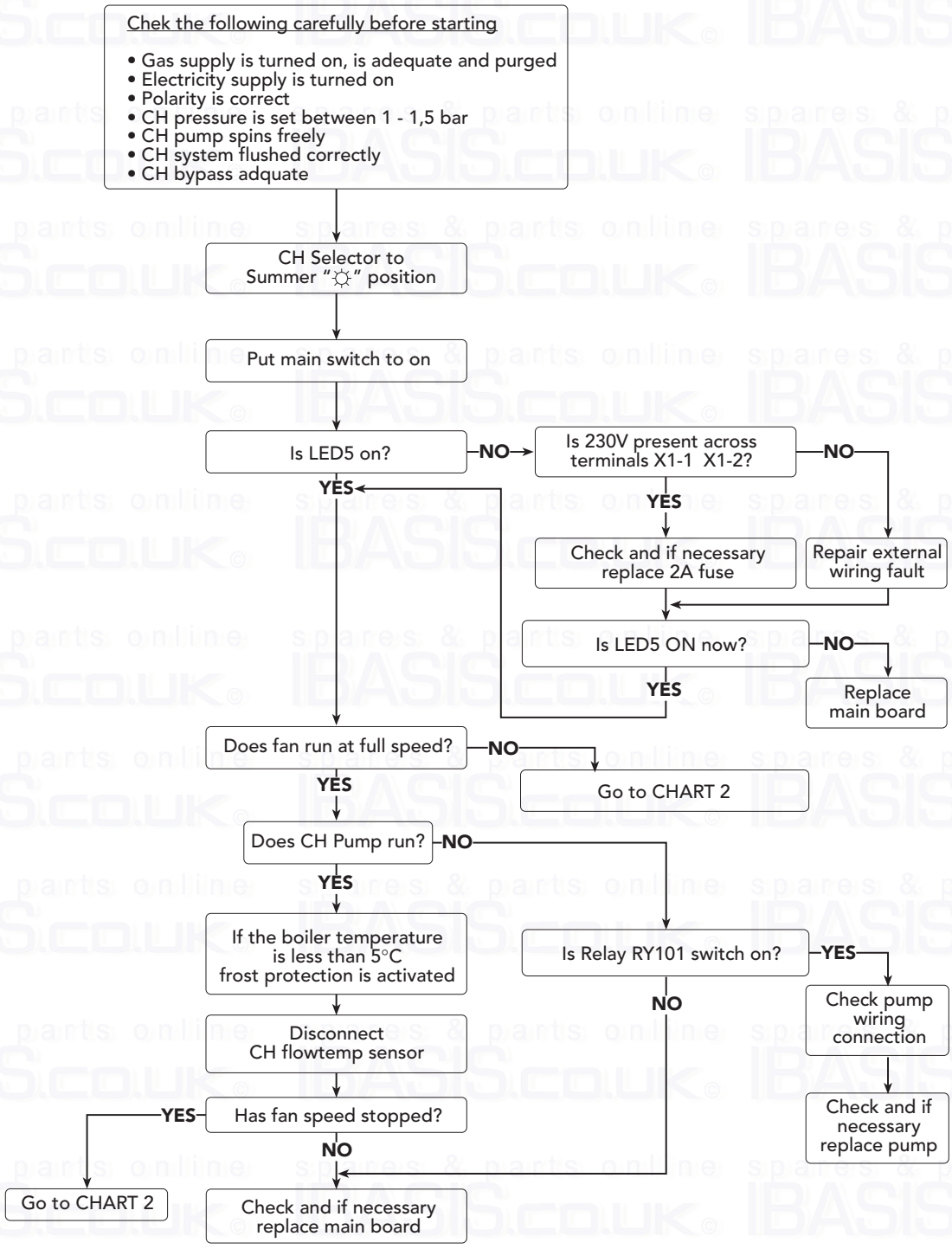

Flow diagram 2
Checking Central Heating Operation

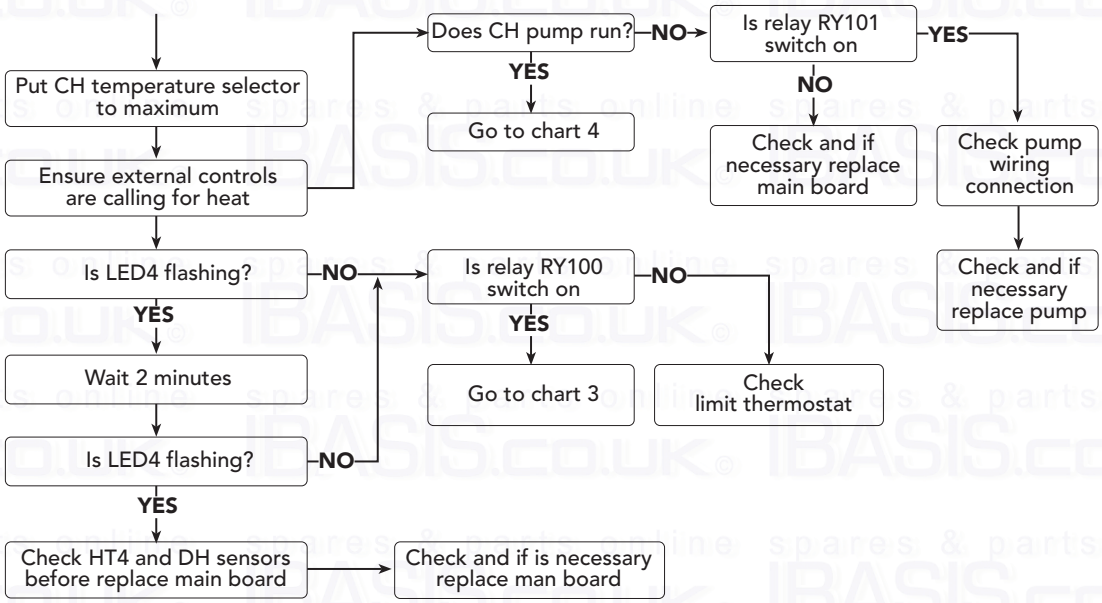

Flow diagram 3
Checking the Fan/Flue Gas Circuit

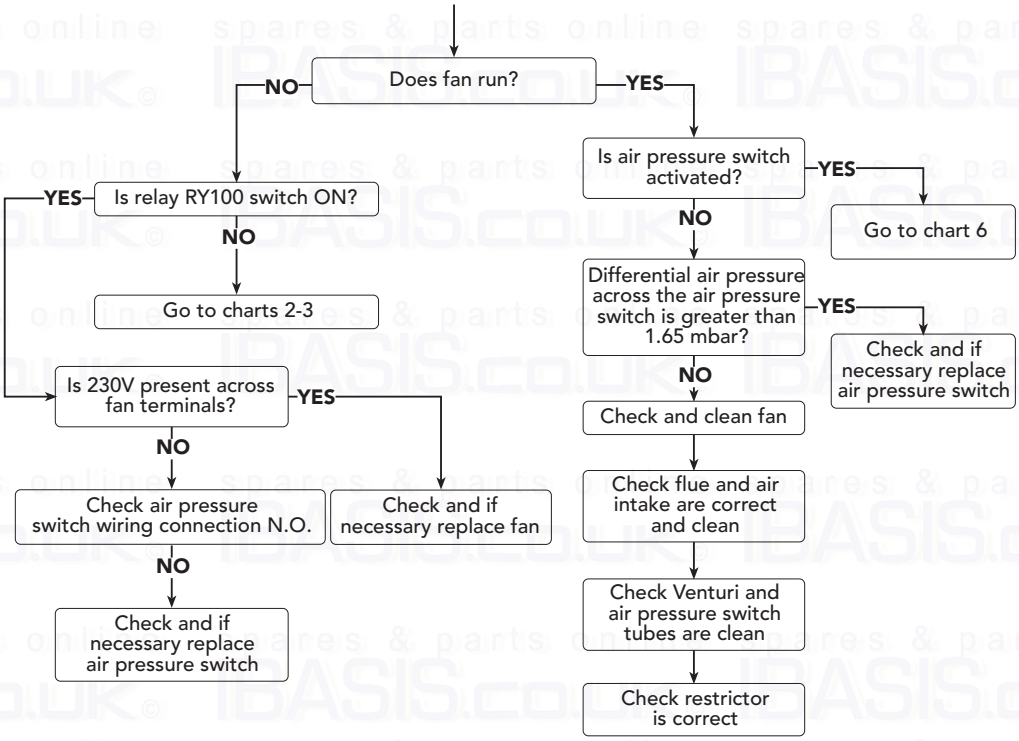

FERROLI

Flow diagram 4
Checking Ignition

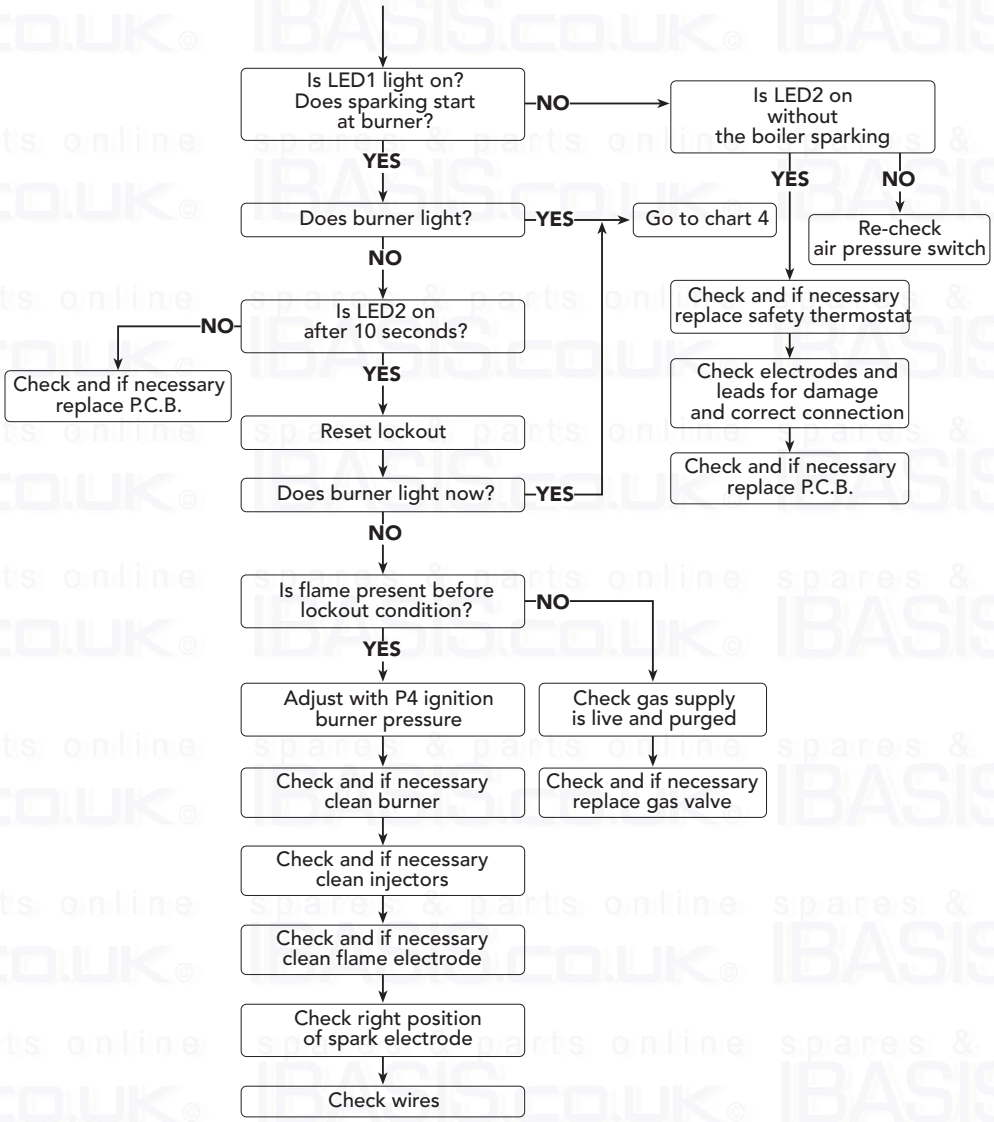

Flow diagram 5
Checking Domestic Hot Water Modulation

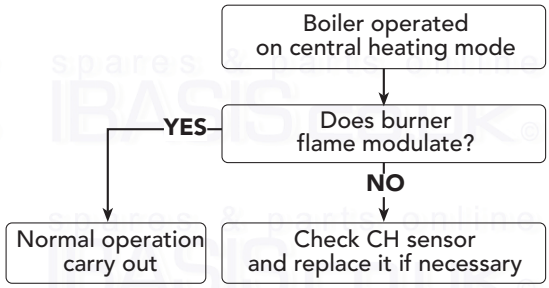

4. CHARACTERISTICS AND TECHNICAL SPECIFICATIONS

4.1 Dimensions and fittings

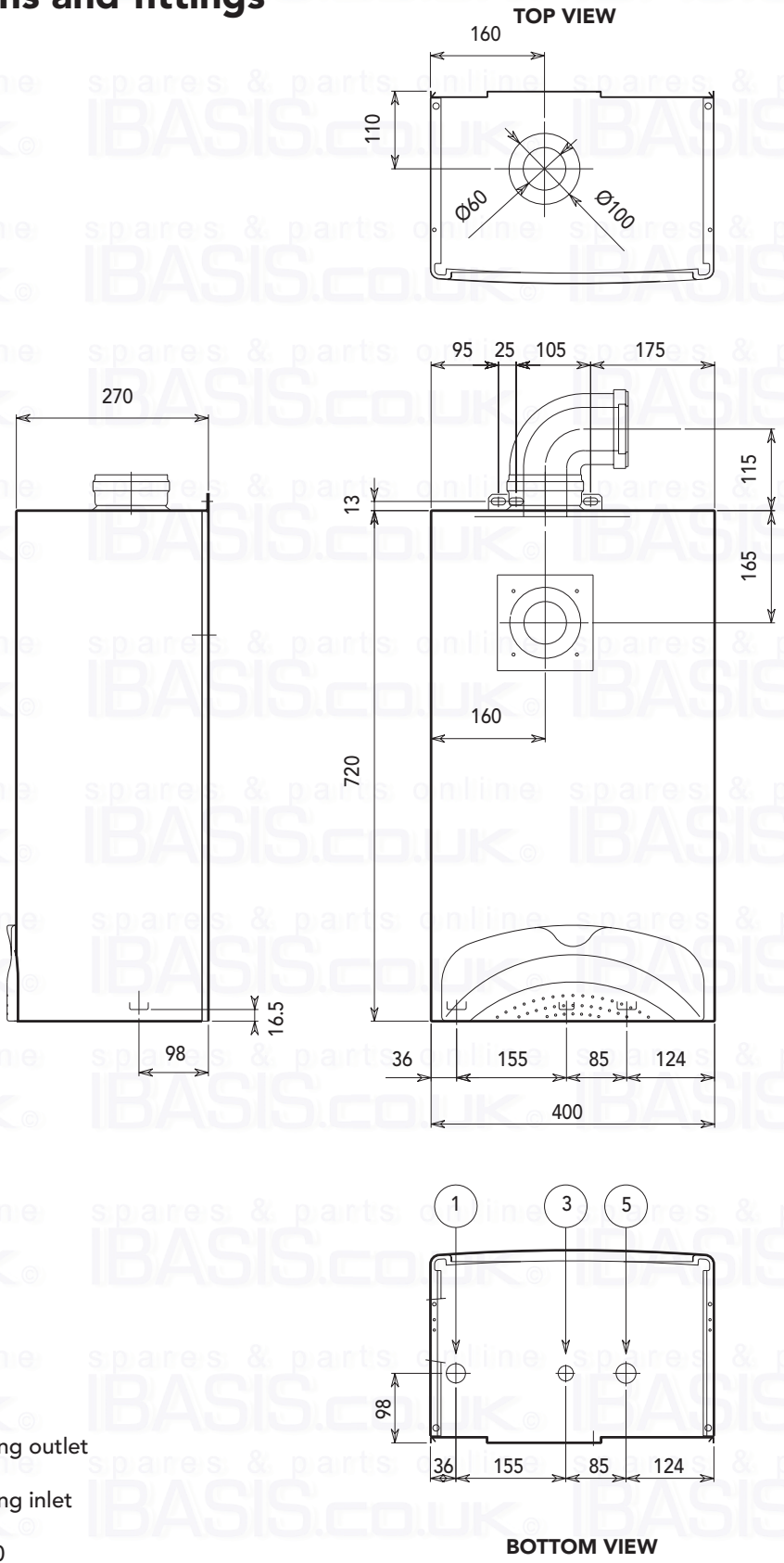

Key

1 Central heating outlet
2 Gas inlet
3 Central heating inlet

fig. 30

FERROLI

4.2 Overall view and main components

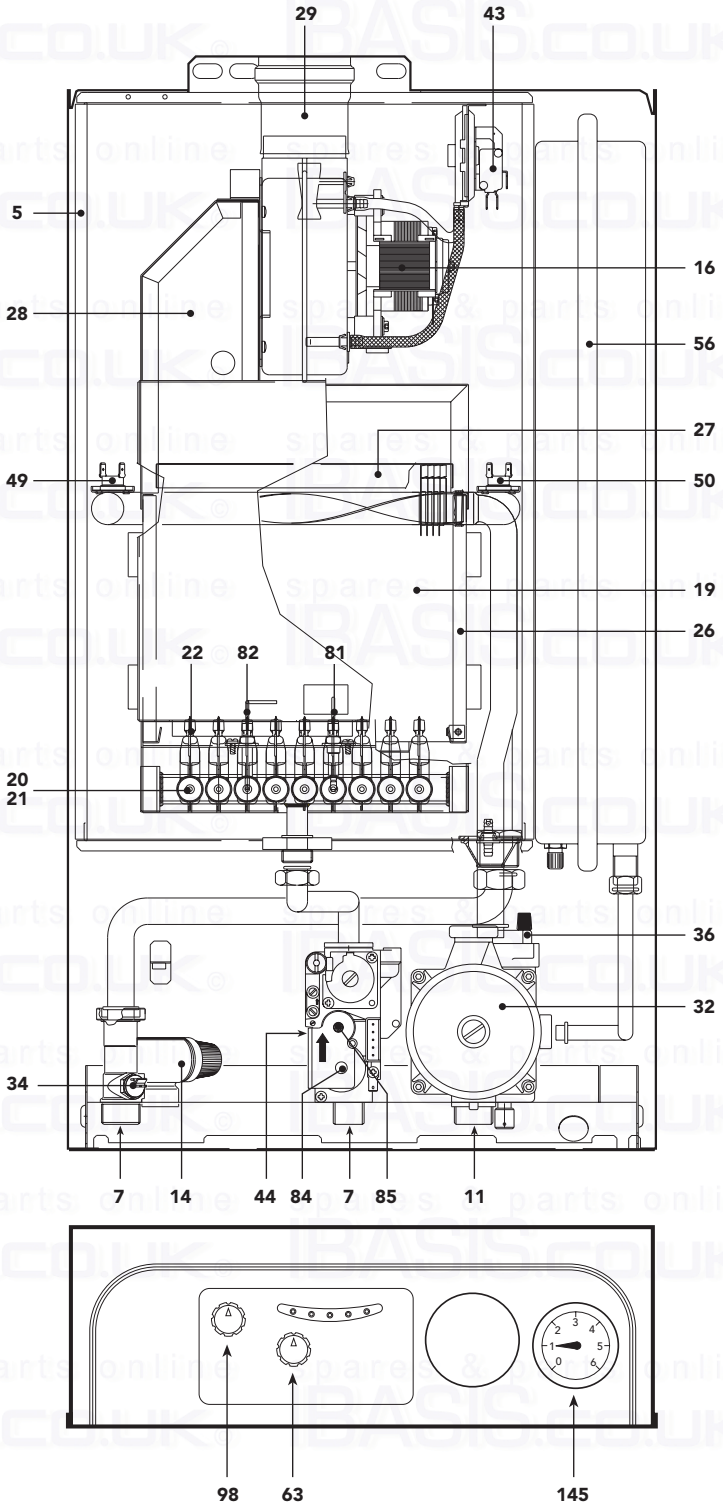

fig. 31

Key

5	Sealed compartment
7	Gas inlet
10	Central heating outlet
11	Central heating inlet
14	Safety valve
16	Fan
19	Combustion chamber
20	Burner assembly
21	Main nozzle
22	Burner
26	Combustion chamber insulation
27	Copper heat exchanger
29	Flue gas outlet manifold
32	Central heating pump
34	Central heating temperature sensor
36	Automatic air vent
43	Air pressure switch
44	Gas valve
49	Safety thermostat
50	Central heating limit thermostat
56	Expansion vessel
63	Central heating temperature adjustment
74	Filling cock
81	Ignition electrode
82	Detection electrode
84	1st gas valve operator
85	2nd gas valve operator
98	Off –On - Reset switch
145	Water pressure gauge

4.3 Hydraulic diagram

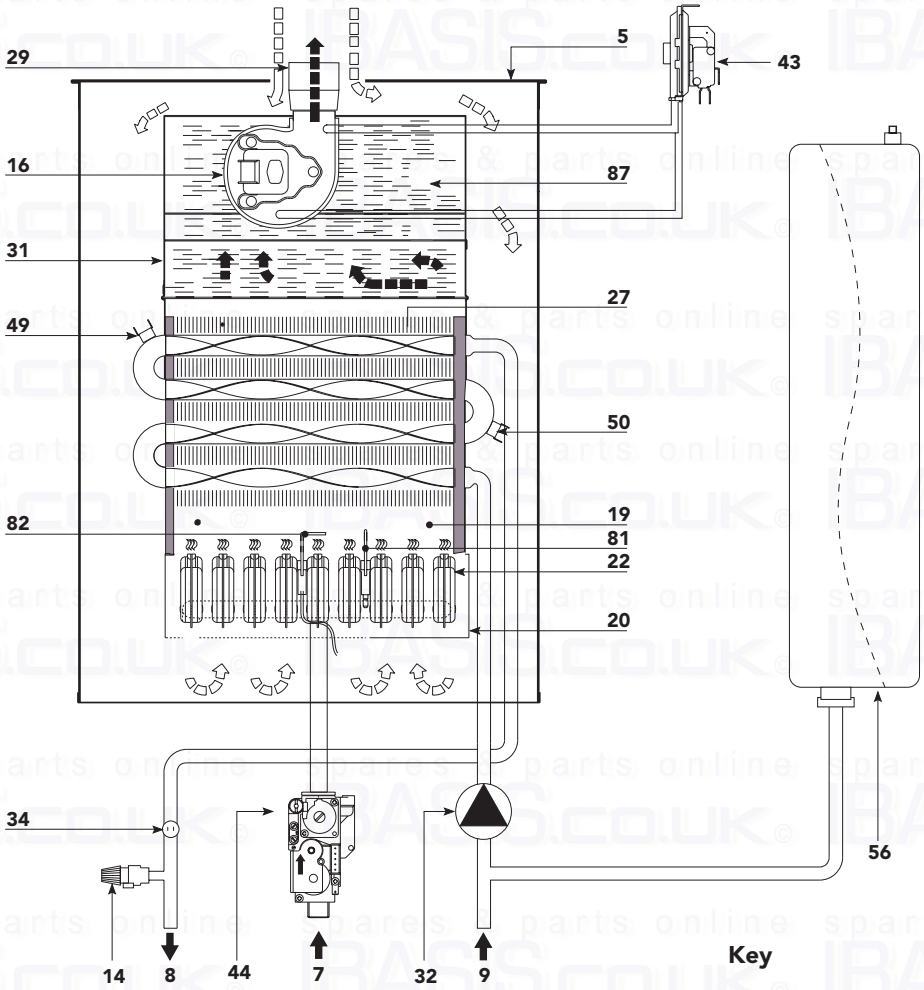

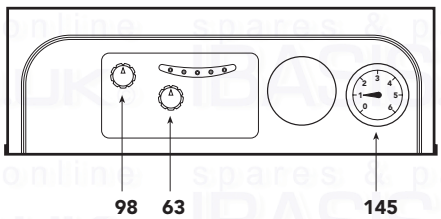

fig. 32

Key

5	-	Room sealed compartment
7	-	Gas supply
8	-	Central Heating flow outlet
9	-	Central Heating return inlet
14	-	Safety valve
16	-	Fan
19	-	Combustion chamber
20	-	Burner box
22	-	Burner
27	-	Copper heat exchanger
29	-	Tube flue outlet
31	-	Flue collector
32	-	Pump
34	-	C.H. flow temperature sensor
43	-	Air pressure switch
44	-	Gas valve
49	-	Overheat cu-off thermostat
50	-	Central heating limit thermostat
56	-	Expansion vessel
63	-	C.H. boiler thermostat
81	-	Spark electrode
82	-	Rectification electrode
87	-	Gas pressure test point
98	-	Main switch
145	-	Pressure gauges

4.4 Technical data table

Table 11		Tempra 12		Tempra 18	
Output		**Pmax**	**Pmin**	**Pmax**	**Pmin**
Nominal Heat Input (Net)	kW	13,3	5,8	19,9	8,6
Nominal Heat Input (Gross)	kW	14,8	6,4	22,1	9,6
Nominal Heat Output	kW	12,0	5,0	18,0	7,5
Gas supply		**Pmax**	**Pmin**	**Pmax**	**Pmin**
Main injectors, Natural Gas (G20)	mm	6 x 1.3		9 x 1.3	
Supply pressure, Natural Gas (G20)	mbar	20,0		20,0	
Burner pressure, Natural Gas (G20)	mbar	12,5	2,5	11,8	2,5
Natural gas rate (G20)	nm^3/h	1,4	0,6	2,1	0,9
Main injectors, LPG (G31)	mm	6 x 0.77		9 x 0.77	
Supply pressure, LPG (G31)	mbar	37,0		37,0	
Burner pressure, LPG (G31)	mbar	36,0	7,0	36,0	7,0
LPG gas rate (G31)	kg/h	1,04	0,45	1,6	0,7
Central heating					
Maximum central heating operating temperature	°C	90		90	
Maximum central heating operating pressure	bar	3		3	
Safety valve	bar	3		3	
Minimum central heating operating pressure	bar	0,8		0,8	
Expansion vessel capacity	litres	7		7	
Expansion vessel pre-fill pressure	bar	1		1	
Hot water capacity	litres	0,8		0,8	
Dimensions, weights, fittings					
Height	mm	720		720	
Width	mm	400		400	
Depth	mm	270		270	
Weight with packaging	kg	30		30	
Gas system fittings	inches	1/2″		1/2″	
System filling fittings	inches	1/2″		1/2″	
Central heating system fittings	inches	3/4″		3/4″	
Power supply					
Max Power Absorbed	W	125		125	
Power supply voltage/frequency	V/Hz	230/50		230/50	
Index of protection	IP	44		44	

4.5 Diagrams

Pressure - output diagrams

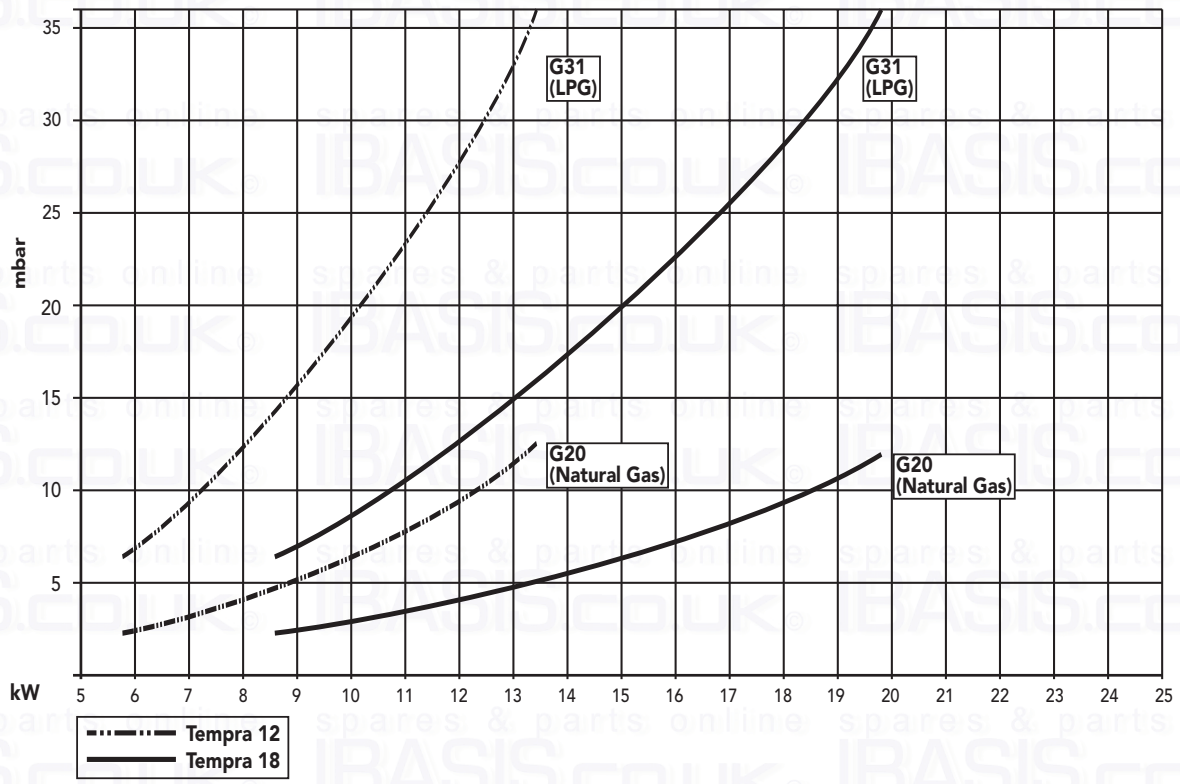

fig. 32

Discharge head available to system

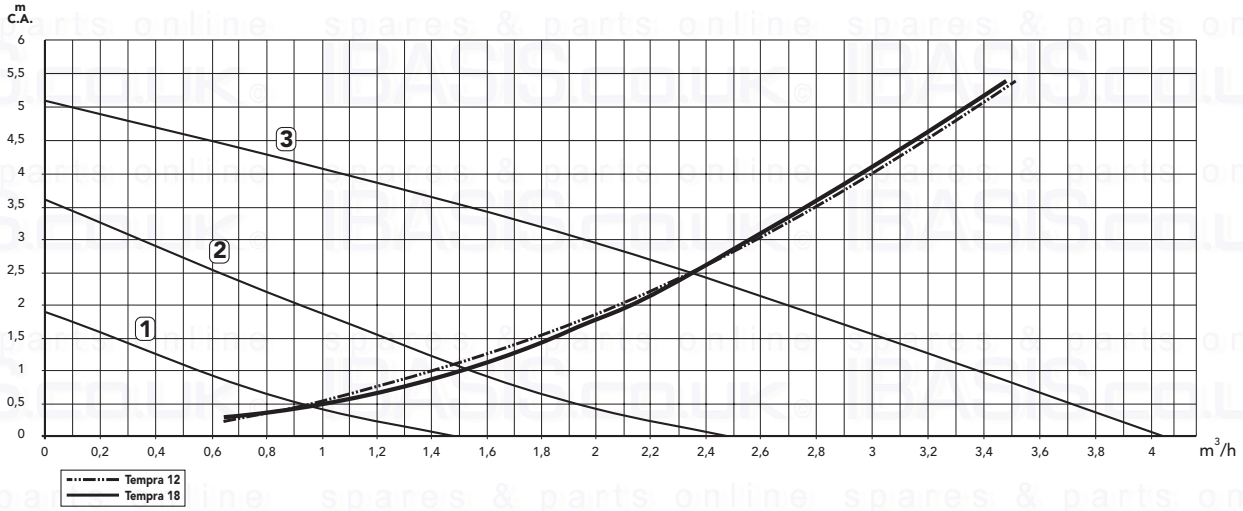

Legenda

1 - 2 - 3 = Pump switch positions

A = Boiler pressure drop

fig. 33

FERROLI

4.6 Wiring diagram

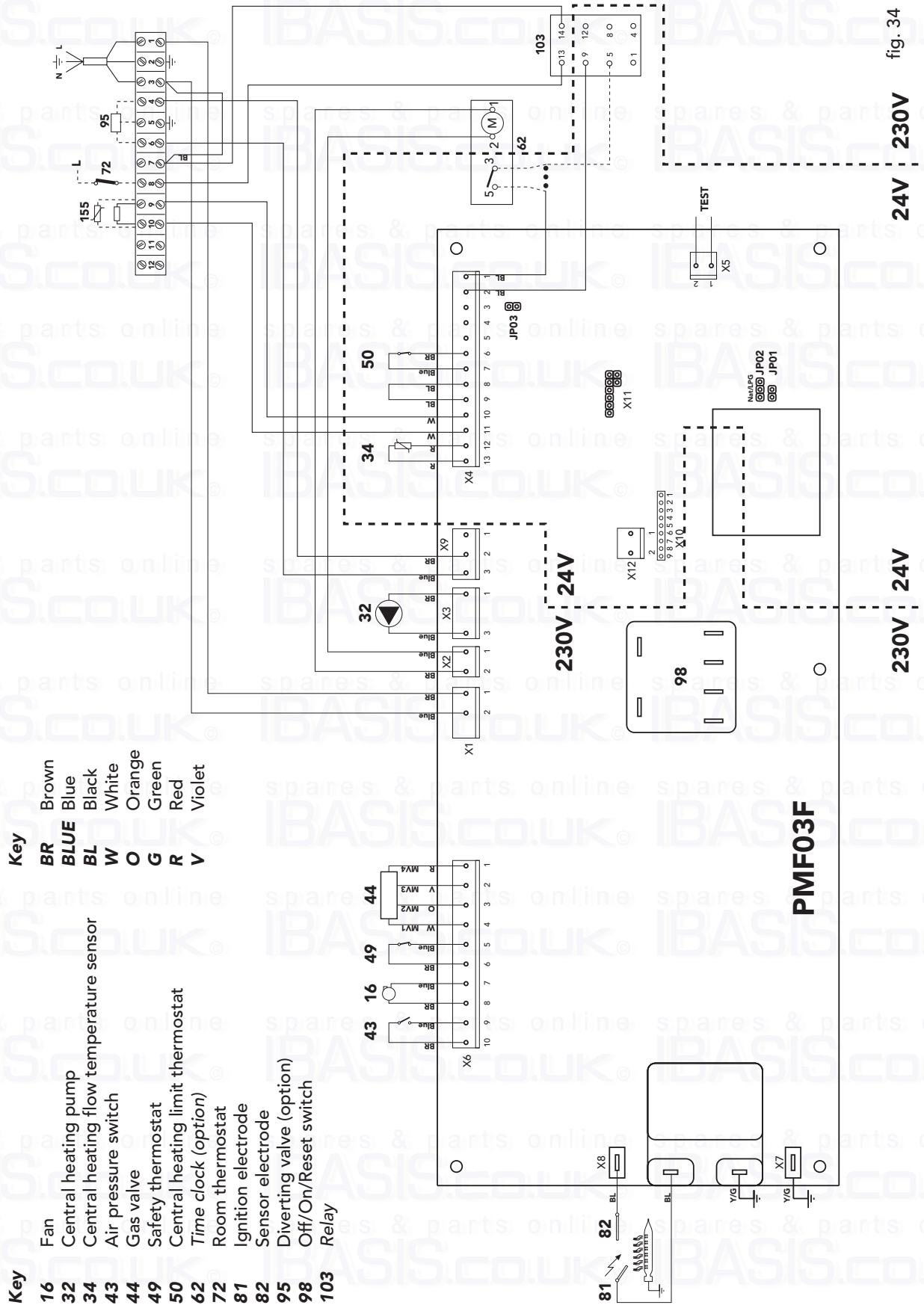

ALL SPECIFICATIONS SUBJECT
TO CHANGE

FERROLI

Lichfield Road,
Branston Industrial Estate,
Burton Upon Trent,
Staffordshire DE14 3HD
Tel. 08707 282 885 -
Fax 08707 282 886

spares & parts online IBASIS.CO.UK