FERROLI

SIGMA

Wall Mounted Cast Iron, Gas Fired Boiler for Central Heating Fan Assisted, Room Sealed, Electronic Flame Ignition and Control

G.C. NO:

Sigma 30 FF 41 - 267 - 07
Sigma 40 FF 41 - 267 - 08
Sigma 50 FF 41 - 267 - 09
Sigma 60 FF 41 - 267 - 10

INSTALLATION AND SERVICING INSTRUCTIONS

Appr. Nr. B 98.06 A - 0461 AT 0344

cod. ---------/- - 10/99

spares & parts online IBASIS.CO.UK

IMPORTANT

Your "benchmark" Installation, Commissioning and Service Record Log Book will be enclosed in your customer information pack. This record must be completed and left with the end user.

Ferroli is a member of the Benchmark initiative and fully supports the aims of the programme. Benchmark has been introduced to improve the standards of installation and commissioning of central heating systems in the UK and to encourage the regular servicing of all central heating systems to ensure safety and efficiency.

CE MARK

CE mark documents that the Ferroli gas appliances comply with the requirement contained in European directives applicable to them.

In particular, the appliances comply with the following CEE directives and the technical specifications provided from them:

- Gas appliances directive 90/396
- Efficiencies directive 92/42
- Low tension directive 73/23 (modified from the 93/68)
- Electromagnetic compatibility directive 89/396 (modified from the 93/68)

Year 2000 Compliance Declaration

We will guarantee that this products is altogether suitable for the data change in the Year 2000 (boiler has no dependence from date change) and that no disruptions will occur which is caused by this product.

INDEX **PAGE**

1. TECHNICAL CARACTERISTICS 3
2. INSTALLATION 6
3. COMMISSIONING AND TESTING 19
4. ADJUSTMENT 20
5. GAS CONVERSION 21
6. MAINTENANCE AND CLEANING 22
7. REPLACEMENT OF PARTS 24
8. FAULT FINDING 27
9. USER INSTRUCTIONS 30

C.O.S.H.H.

Materials used in the manufacture of this appliance are non hazardous and no special precautions are required when servicing.

1. TECHNICAL CARACTERISTICS

1.01 Introduction

The **Sigma** is defined as a "room sealed" boiler, all air required for combustion is taken from outside the room in which it is installed. It is a new high performance gas fired heat generator, which is designed to provide indirect hot water and/or central heating. The cast iron heat exchanger is suitable for use on fully pumped hot water/central heating systems, which may be seal or open vented. A special feature of this boiler is its built-in electronic flame ignition and control unit making burner operation completely automatic and safe.
The main components are as follows:
Cast iron heat exchanger specifically shaped for high efficiency.
Ceramic fibre insulated combustion chamber
One stainless steel bladed burner specifically designed for this boiler.
Fan for discharge of combustion products and intake of combustion air.
Differential air pressure switch. For safety reasons, this ensures the burner ignites only when the fan is functioning correctly.
Hermetically sealed compartment made from corrosion-resistant steel enclosing the above components.
Combination gas safety valve, complete with pressure stabiliser.
Central heating flow temperature adjustment thermostat.
Overheat safety thermostat.
Electronic control unit for automatic flame ignition and control.
Central heating flow temperature sensor.

1.02 Dimension

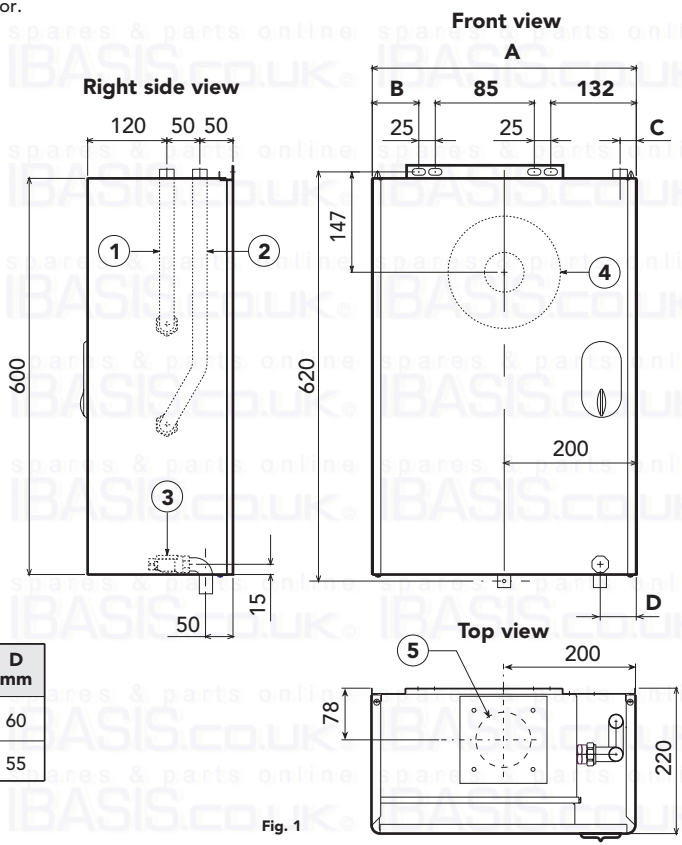

Fig. 1

Key
1 - Ø 22 mm flow outlet
2 - Ø 22 mm return inlet
3 - Ø 15 gas inlet
4 - Rear air inlet/flue outlet
5 - Top air inlet/Flue outlet

Model	A mm	B mm	C mm	D mm
Sigma 30-40	320	53	35	60
Sigma 50-60	400	133	30	55

1.03 Technical data

Model	Heat output		Heat input (net)		Heat input (gross)		Injectors (mm)		Gas flow rates			
									G20 m³/h-NG		G31 kg/h-LPG	
	Max kW	Min kW	Max kW	Min kW	Max kW	Min kW	G20-NG Ø	G31-LPG Ø	Max	Min	Max	Min
Sigma 30	8,8	5,5	9,8	6,1	10,9	6,8	2,6	1,6	1,03	0,64	0,77	0,48
Sigma 40	11,7	8,5	13,0	9,4	14,4	10,5	3,0	1,8	1,37	0,99	1,02	0,74
Sigma 50	14,7	11,4	16,3	12,7	18,1	14,1	3,30	2,10	1,72	1,34	1,28	0,99
Sigma 60	17,6	14,4	19,5	16,0	21,7	17,8	3,60	2,30	2,06	1,69	1,53	1,25

Model	Gas supply pressures		Burner gas pressures			
			G20-NG		G31-LPG	
	G20-NG mbar	G31-LPG mbar	Minimum mbar	Nominal mbar	Minimum mbar	Nominal mbar
Sigma 30	20	37	6,2	15,3	14,0	36
Sigma 40	20	37	7,3	14,0	19,0	36
Sigma 50	20	37	9,3	15,3	23,6	36
Sigma 60	20	37	10,7	15,3	25,0	36

Model	Connections			Max. working pressure C.H.circuit	Protection level	Weight	Boiler water contents	Gas valve Ø 1/2" Honeywell
	Flow 1 Ø	Return 2 Ø	Gas inlet 3 Ø	bar		kg	litres	
Sigma 30	22	22	15	3	IP 40	30	1,3	VK 4105 A
Sigma 40	22	22	15	3	IP 40	30	1,3	VK 4105 A
Sigma 50	22	22	15	3	IP 40	35	1,6	VK 4105 A
Sigma 60	22	22	15	3	IP 40	35	1,6	VK 4105 A

N.B. • Maximum working temperature 100°C, adjustable between 60°C and 82°C.

IBASIS.CO.UK spares & parts online

1.04 General Layout and Main Components

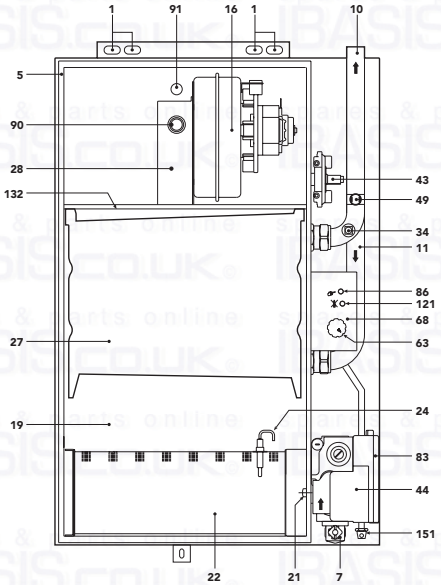

Key	
1	Fixing points
5	Room sealed compartment
7	Inlet gas-cock
10	Central heating flow outlet
11	Central heating return inlet
16	Fan
19	Combustion chamber
21	Gas injector
22	Burner
24	Spark and sensor electrode
27	Cast iron heat exchanger
28	Flue collector from heat exchanger
34	Central heating flow temperature sensor
43	Air pressure switch
44	Gas valve
49	Safety overheat thermostat
63	Central heating temperature setting
68	Control box with P.C.B.
83	Full sequence automatic control
86	Automatic control reset switch
90	Flue outlet pressure test point
91	Air pressure test point
121	Boiler shut-down warning
132	Flue gas deflector
151	Drain tap

Fig. 2

1.05 Boiler water flow diagram

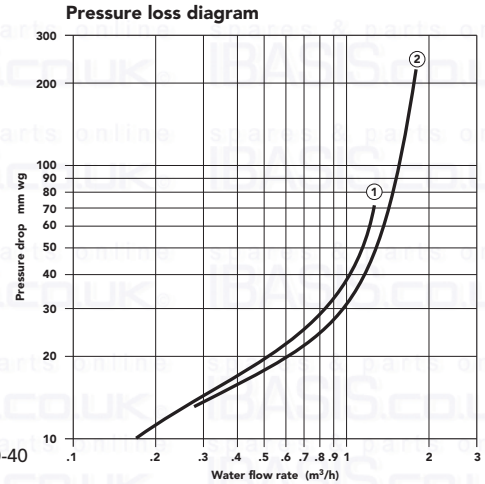

1 = Sigma 30-40

2 = Sigma 50-60

Fig. 3

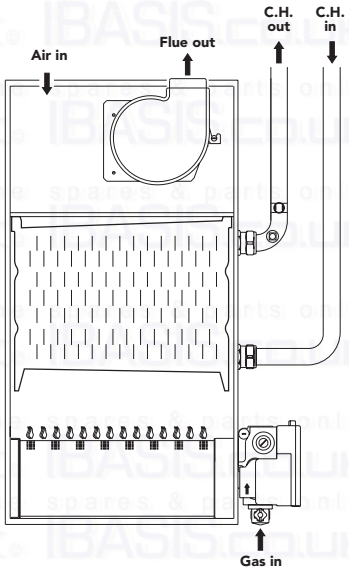

2. INSTALLATION

2.01 Important notices

Assembly, installation, first start up and maintenance must be carried out by competent persons only, in accordance with all current technical regulations and directives.

Gas Safety (Installation & Use) Regulations: 1996
In the interest of safety, **it is the law** that all gas appliances are installed by a competent person in accordance with the above Regulations, Building Regulations/Building Standards Scotland, Codes of Practice, current I.E.E. Regulations and the byelaws of the Local Water Undertaking. Failure to comply with the Regulations may lead to prosecution; it is your responsibility to ensure that the law is complied with.

This appliance must be installed strictly in accordance with these instructions and regulations:

The Gas Safety Regulations (Installations & Use) 1996.
The Local Building Regulations.
The Building Regulations.
The Buildings Standards (Scotland - Consolidated) Regulations.
British Standards Codes of Practice:

B.S.	5440	PART 1	Flues
B.S.	5440	PART 2	Air supply
B.S.	5449	1990	FORCED CIRCULATION HOT WATER SYSTEMS
B.S.	6798	1987	INSTALLATION OF GAS FIRED HOT WATER BOILERS
B.S.	6891	1989	GAS INSTALLATIONS
B.S.	7671	1992	IEE WIRING REGULATIONS
B.S.	4814	1990	SPECIFICATION FOR EXPANSION VESSELS
B.S.	5482	1994	INSTALLATION OF LPG
B.S.	7593	1992	TREATMENT OF WATER IN DOMESTIC HOT WATER CENTRAL HEATING SYSTEMS

Model Water Bye Laws
For Northern Ireland the rules in force apply

N.B. For Northern Ireland the rules in force apply.

Important - If the boiler is to be fitted in a timber framed building it should be fitted in accordance with the institute of gas engineers publication IGE/UP/1. If in doubt advice should be sought from the Local Gas Region of British Gas Plc.

2.01.01 Location of Boiler

The installation of the **Sigma** must be on a suitable non-combustible load bearing wall which will provide an adequate fixing for the boiler mounting bracket assembly. The location should be in an area where the water pipes will not be subjected to frost conditions. In siting the boiler the following limitations **must** be observed:
The boiler may be installed in any room or internal space, although particular attention is drawn to the requirements of the current I.E.E. wiring regulations and in Scotland the electrical provisions of the building regulations applicable in Scotland, with respect to the installation of the boiler in a room or internal space containing a bath or shower.
Where a room sealed appliance is installed in a room containing a bath or shower any electrical switch or appliance control utilising mains electricity must be situated so that it cannot be touched by a person using the bath or shower.

2.01.02 Air Supply

The room or compartment in which the boiler is installed does not require a purpose provided vent when using the standard concentric flue.

2.01.03 Flue System

The boiler allows the flue outlet to be taken from the rear of the boiler, from either side or vertically.
A standard flue length of 0.75 metres is provided. Alternative lengths of two or three metres can be supplied (equivalent to wall thicknesses of up to 565, 1815 and 2815mm for rear flues, deduct 91mm plus distance from side wall for side outlet flues). It is absolutely **essential**, to ensure that products of combustion discharging from the terminal cannot re-enter the building, or enter any adjacent building, through ventilations, windows, doors, natural air infiltration or forced ventilation/ air conditioning.

2.01.04 Gas Supply

If necessary the local Gas supplier should be consulted, at the installation planning stage, in order to establish the availability of an adequate supply of gas.
An existing service pipe must **not** be used without prior consultation with the Local Gas supplier.
A gas meter can only be connected by the Local Gas supplier, or by a Local Gas suppliers Contractor.
Installation pipes should be fitted in accordance with BS6891-1988.
Appliance inlet working pressure must be 20mbar MINIMUM (Natural gas - G20) or 37 mbar MINIMUM (LPG - G31).
Pipework from the meter to the combination boiler must be of an adequate size.
Do not use pipes of a smaller size than the combination boiler inlet gascock connection.
The complete installation must be tested for gas soundness and purged as described in BS6981-1988. All pipework must be adequately supported.

2.02 Water System (sealed systems)

Central heating

Detailed recommendations are given in BS6798, BS5449, BS6700 and CP342 Part 2. Pipework not forming part of the useful heating suface should be insulated to prevent any heat losses or possible freezing (i.e. in roof spaces or ventilated underfloor spaces). Drain taps should be positioned at the lowest point of the system in accessible locations to permit the whole system to be drained down. The drain taps should be in accordance with BS2879. Copper tubing to BS2871, Part 1 is recommended for water carrying pipework. Pipework in horizontal runs should have a gradient where possible to facilitate the removal of air. Ensure that the boiler heat exchanger is not a natural point for air collection. A typical sealed heating system illustrated in fig. 4.

Typical sealed fully pumped heating system

Note: A bypass must be fitted as far as possible from the boiler if thermostatic radiator valves are fitted thoughout.

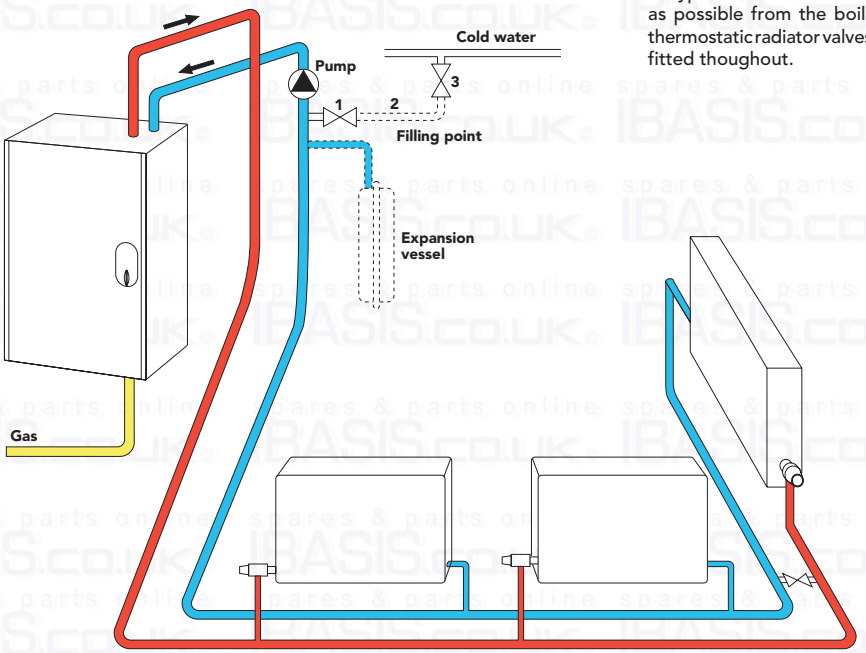

Fig. 4

Important - If thermostatic radiator valves are fitted throughout a bypass must be fitted to ensure a minimum flow rate through the boiler of 6 l/min. The bypass should be fitted as far as possible from the boiler.

2.02.01 Make Up Water

Provision must be made for replacing water lost from the sealed system. Reference should be made to BS6798, for methods of filling and making up sealed systems. There must be no direct connection between the boiler's central heating system and the mains water supply. The use of mains water to charge and pressurise the system directly, is conditional upon the Local Water Byelaws. Again any such connection must be disconnected after use. A typical temporary filling loop is shown in fig. 5.

Fittings manufactured from duplex (alpha-beta) brass are not acceptable for underground use and certain water undertakings will not accept their use above ground.

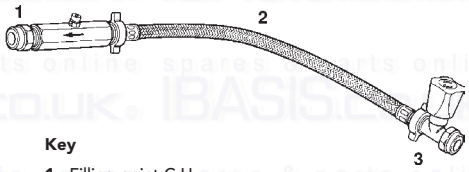

Key

1 - Filling point C.H.
2 - Temporary connection
3 - Cold water supply

Fig. 5

2.02.02 Safety valve

A safety valve complying with the requirements of BS 6750 Part 1 must be fitted close to the boiler on the flow pipe by means of a horizontal or vertically upward connection with no intervening valve or restrictions and should be positioned to facilitate testing. The valve should be pre-set and nonadjustable to operate at a pressure of 3 bar (45 lbf/in^2). It must be arranged to discharge any water or steam through a pipe to a safe outlet position.

2.02.03 Pressure gauge

A pressure gauge of minimum range 0-4 bar (0-60 lbf/in2) with a fill pressure indicator must be fitted to the system, preferably at the same point as the expansion vessel in an easily visible position.

2.02.04 Venting

A method of venting the system during filling and commissioning must be provided by fitting automatic air vents or by venting manually.

2.02.05 Expansion vessel

In a sealed system an expansion vessel complying with the requirements of BS 4814 must be fitted to the system by means of a connection close to the inlet side of the circulating pump in accordance with the manufacturers instructions, the connecting pipe being unrestricted and not less than 15 mm (1/2 in) nominal size. The volume of the vessel should be suitable for the system water content and the nitrogen or air charge pressure should not be less than the system static head.

Further details of sealed system design can be obtained from BS 5449: Part 1 and the British Gas publication entitled Specifications for Domestic Wet Central Heating Systems.

Sizing of expansion vessels:

VESSEL CHARGE PRESSURE (bar)	0.5			1.0		1.5
INITIAL SYSTEM PRESSURE (bar)	1.0	1.5	2.0	1.5	2.0	2.0
TOTAL WATER CONTENT of SYSTEM	**EXPANSION VESSEL VOLUME** (litres)					
Litres						
25	3.5	6.5	13.7	4.7	10.3	8.3
50	7.0	12.9	27.5	9.5	20.6	16.5
75	10.5	19.4	41.3	14.2	30.9	24.8
100	14.0	25.9	55.1	19.0	41.2	33.1
125	17.5	32.4	68.9	23.7	51.5	41.3
150	21.0	38.8	82.6	28.5	61.8	49.6
175	24.5	45.3	96.4	33.2	72.1	57.9
200	28.0	51.8	110.2	38.0	82.4	66.2
For syst. volumes other than those given above, mult. the syst. volume by the factor across.	0.140	0.259	0.551	0.190	0.412	0.33

2.02.06 Boiler water characteristics

If the water is harder than 18 clarke degrees, the water used should be treated to avoid possible scale in the boiler caused by hard water or corrosion by aggressive water. It should be remembered that as a result of its low thermal conductivity, even scale of just a few millimetres thick can lead to considerable overheating of the boiler walls, resulting in serious problems.
IT IS ABSOLUTELY VITAL THAT THE WATER USED IS TREATED IN THE FOLLOWING CASES:
a) Extensive systems (containing large quantities of water);
b) Frequent additions of water to top-up the system.
If the system requires partial or total emptying, you are recommended to refill it with treated water.

2.02.07 Filling (sealed systems)

When cold, system pressure should be about 1 bar. If while running venting off of air dissolved in the water causes the pressure of the central heating system to drop below the minimum level described above, the user must utilise a filling loop to bring it back to the original value. During operation, water pressure in the boiler when hot should be about 1.5 - 2 bars. After filling, always close and disconnect the filling loop.

Note - If there is a possibility of air pockets forming in certain points of the central heating system flow and return pipes, you are recommended to fit an air vent valve at these points.

Note - When the boiler is installed below the level of the central heating system, single check valve should be fitted in the eating flow to prevent gravity circulation around the heating circuit.

N.B. - The filling loop will be fitted by the installer at the time of fitting the system. It is NOT a part of the boiler.

2.03 Gas connection

Gas connection must be carried out using a rigid pipe.
The flow at the gas meter should be sufficient for the simultaneous use of all appliances connected to it. Connect the gas supply to the boiler according to current regulations. The diameter of the gas cock leaving the boiler is not the determining factor in choosing the diameter of the pipe between the appliance and the meter. This must be selected in relation to length and pressure drop.
The whole of the gas installation including the meter should be inspected and tested for soundness and purged in accordance with BS6891-1988.

2.04 Wall Mounting

2.04.01 Drilling Template (Rear Flue Application)

Model	A
Sigma 30-40	320
Sigma 50-60	400

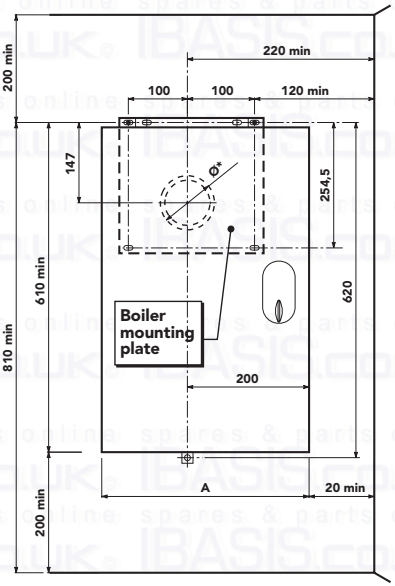

Fig. 6

2.04.02 Wall mounting instructions for Rear Flue Application

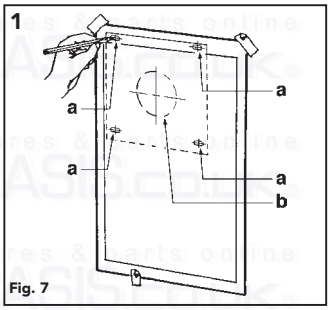

Fig. 7

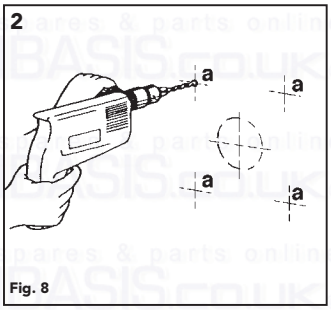

Fig. 8

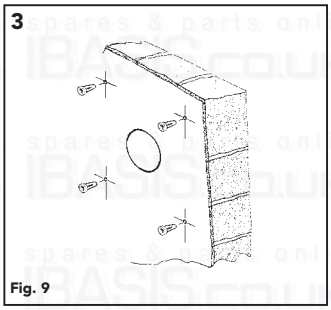

Fig. 9

Select suitable mounting position for boiler. Refer to fig. 6 for dimensions and minimum clearance. Using the template or mounting plate mark flue outlet and boiler mounting points.

Drill four 10 mm holes 70 mm deep to accept the wall plug. Using a core drill cut hole for the flue.
Drill cut a 118 mm diameter hole if it is possible insert the flue-pipe from outside of the room; drill cut a 127 mm diameter hole if to insert the flue-pipe from inside of the room.

Insert the plastic plugs.

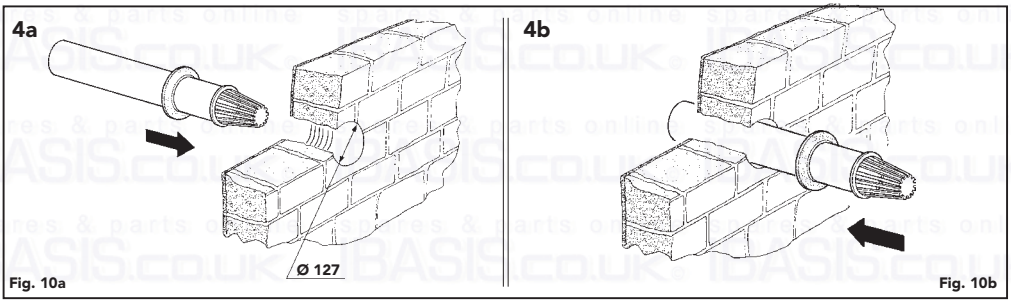

Fig. 10a Fig. 10b

Insert flue-pipe from inside of the room (core drill 127 mm hole)...

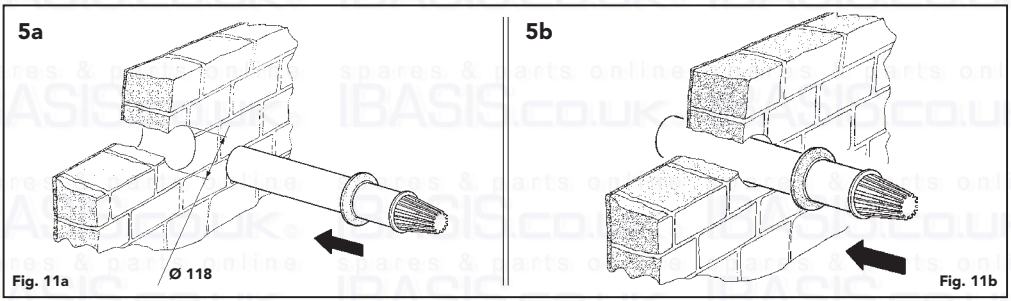

Fig. 11a Fig. 11b

... or insert flue-pipe from outside of the room (core drill 118 mm hole).

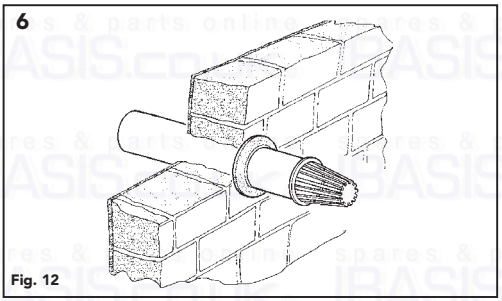

Fig. 12

Gently pull back until wall seal is flush with the wall.

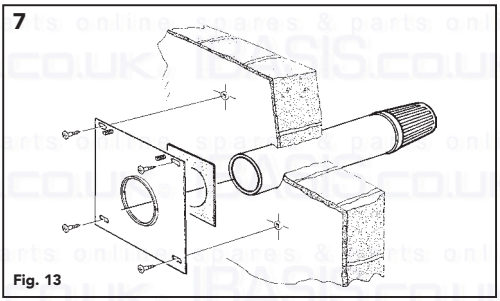

Fig. 13

Position the wall plate on the wall. Fix plate to wall with the square gasket between the wall and the plate use the large diameter washers for the bolts ad screws.

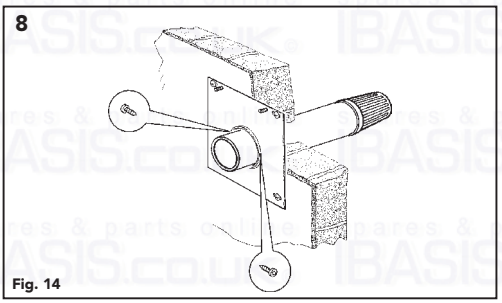

Fig. 14

Through plate into air tube, drill two holes and fix in place using two self tapping screws n° 6 x 6mm long.

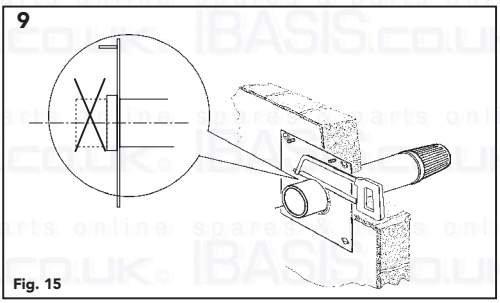

Fig. 15

Cut the outer flue flush with the flange on the hanging plate.

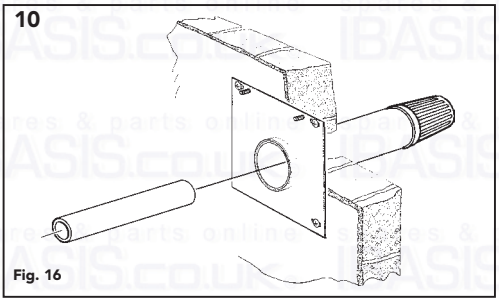

Fig. 16

Insert the aluminium flue pipe into white plastic outer flue, making sure the aluminium pipe sits fully and centrally into the flue terminal.

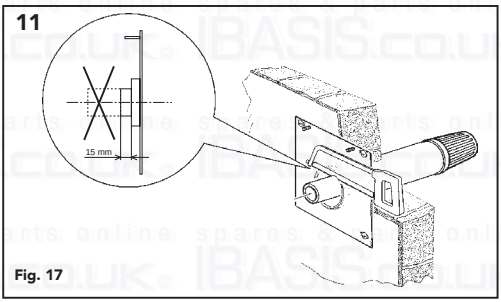

Fig. 17

Mark the aluminium flue pipe at the point it is flush with the mounting plate. Add 15 mm to this mark and cut the aluminium inner flue pipe at this point.

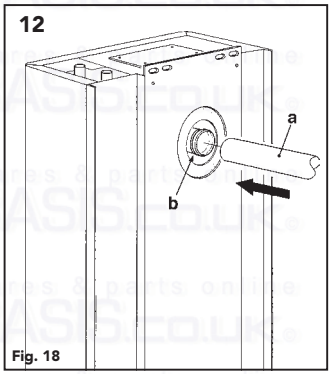

Fig. 18

Install the inner metal flue **"a"** into the adapter **"b"**.

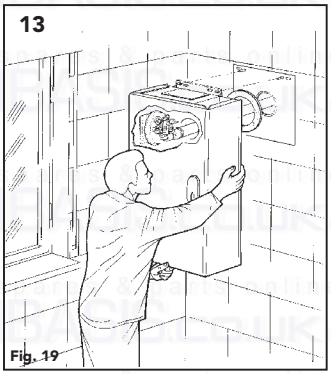

Fig. 19

Lift boiler with flue pipe in place, engage inner and outer flue, slide into position.

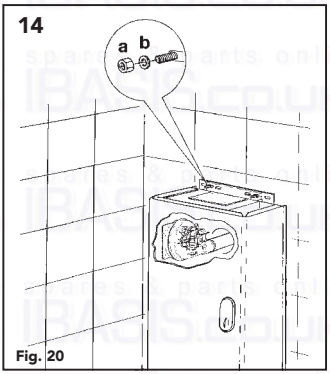

Fig. 20

Make sure the inner flue is fully engage in the flue terminal, secure boiler with two nuts and washers **"a"** and **"b"**.

2.05 Top outlet flue conversion

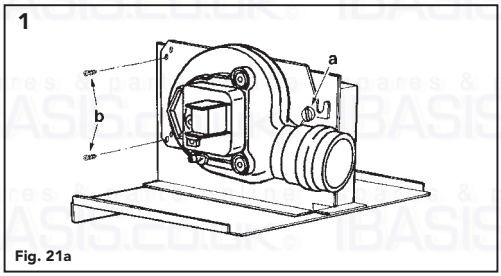

Fig. 21a

Remove fan by pulling off electrical connections. Pull off air pressure switch tubes from the air pressure switch en. Remove the two screws **"b"** and rotate the fan upward to disengage it from the securing pin **"a"**.

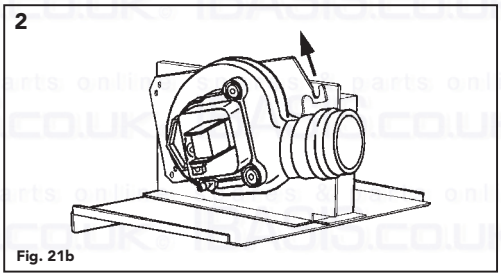

Fig. 21b

Rotate the fan upward to disengage it from the securing pin **"a"**. Remove the securing screw that locates the fan nozzle extension to the fan and remove the nozzle extension.

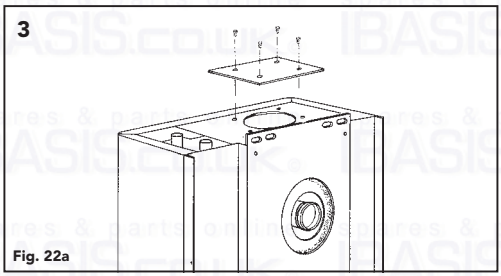

Fig. 22a

Take off the four screws which fix the top sealed chamber cover, remove the cover and gasket.

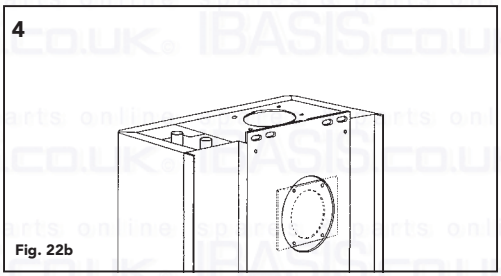

Fig. 22b

Rotate the cover and gasket through 90° and fit it to the rear of the boiler to cover the original flue outlet. Secure them both in place with the four screws removed previously.

5

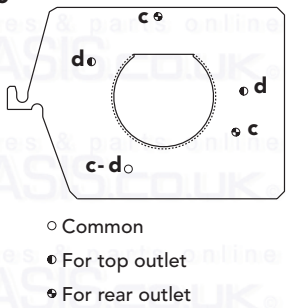

Fig. 23

Remove fan mounting plate by undoing the three fixing screws **"c"**.

6

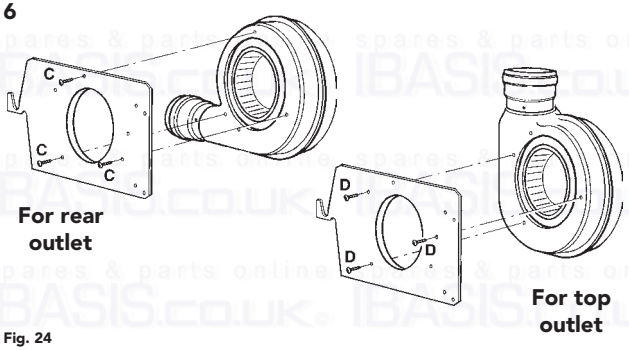

Fig. 24

Rotate the fan through 90° so that the fan nozzle points upward. Secure the fan to the plate in the new position using screws in position **"d"**.

Boiler is fitted as standard with Ø36 (Sigma 30-40) or Ø41 (Sigma 50-60) restrictor. Identify on 2.07 the correct restrictor for your flue system. If it is necessary to change it. follow instructions at step 7-10, if not, go to step 11.

7

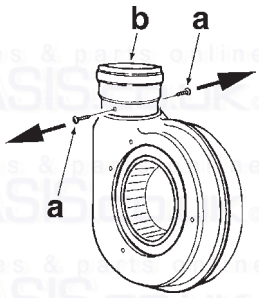

Fig. 25

Remove the two screws **"a"** from pipe connection **"b"**.

8

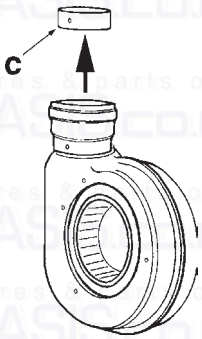

Fig. 26

Remove restrictor **"c"**.

9

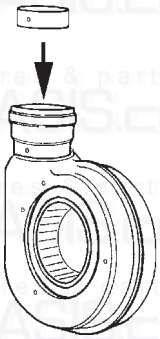

Fig. 27

Insert the correct restrictor. (See section 2.07).

10

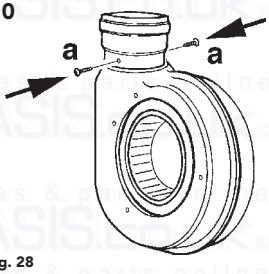

Fig. 28

Fix the restrictor with the two screws **"a"** inside the pipe connection **"b"**.

11

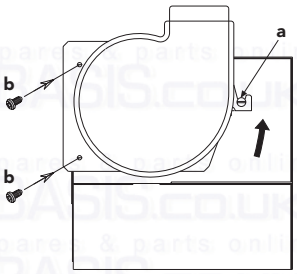

Fig. 29

Refit wiring connections to fan and air pressure switch tubes ensuring correct orientation. I.E. red tube to air pressure switch connection with red dot (+) and clear tube to air pressure switch connection with no paint marking (-).
Fit the fan into the boiler rotating the front upwards to engage with the pin **"a"**.
Secure with the screws **"b"**.

2.06 Top outlet Flue Connection

Three different connection are available from top of the boiler, using accessories as reported on fig. 30a, b e c and on examples a next page.

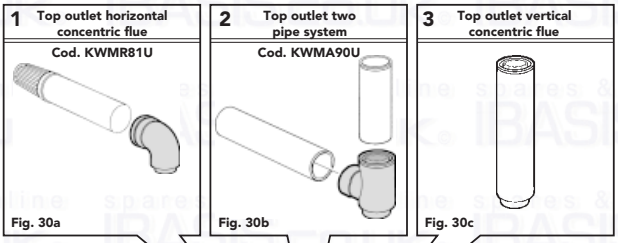

Vertical Connection KWMR52A, KWMR81U concentric bend and two pipe separator KWMA90U can be supplied on request.

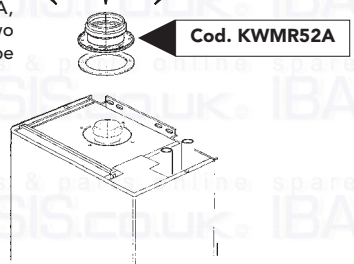

Fig. 30

2.06.01 Examples of top flue connection

1 Example of concentric flue Ø 100 with appliance bend use

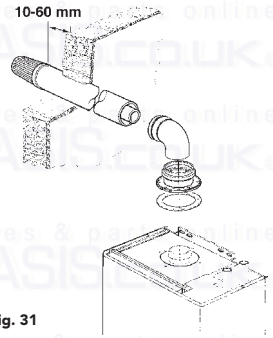

Fig. 31

Note • Bear in mind that the two concentric pipes must slope downwards away from the boiler at a rate of about 3 mm/m to avoid rainwater entering the boiler. Outside, the pipes should protrude from the wall between 10 and 60 mm.
Warning • Back exit with coaxial bend is not possible

2 Example of direct roof flue outlet and wall air inlet with 2 pipe system

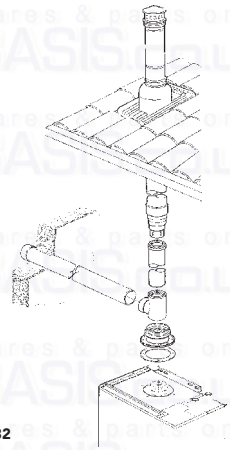

Fig. 32

Warning • Back exit with Air/Flue T separator is not possible

3 Example of concentric flue Ø 100 with vertical outlet flue use.

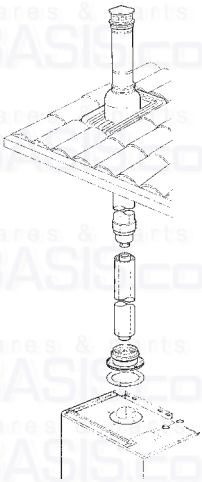

Fig. 33

2.07 Restrictor and max flue length

2.07.01 Concentric Flue system

First table below shows the maximum flue lengths available for boilers with concentric systems.
For correct calculation remember to include the reduction for bend and flue terminals listed on second table.

Maximum flue lenght permissible	100 mm contentric		125 mm concentric		100 mm contentric back exit
	Vertical	*Horizontal	Vertical	*Horizontal	
Sigma 30-40-50-60	4 m	3 m	5 m	5 m	1 m

Reduction for bend	
100 mm concentric bend 90°	1 m
100 mm concentric bend 45°	0,5 m
125 mm concentric bend 90°	0,5 m
125 mm concentric bend 45°	0,25 m

* For horizontal flueing the reduction for appliance bend are already included.

A Horizontal concentric

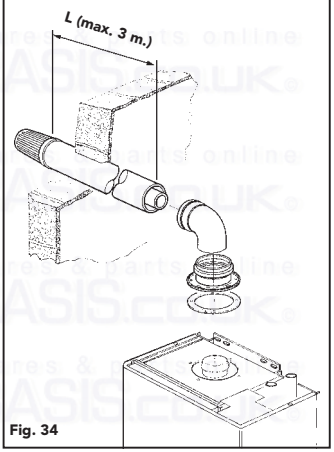

Fig. 34

B Back concentric

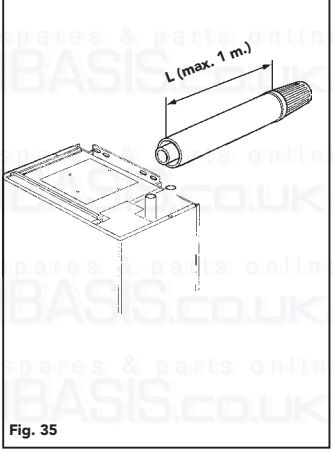

Fig. 35

C Vertical concentric

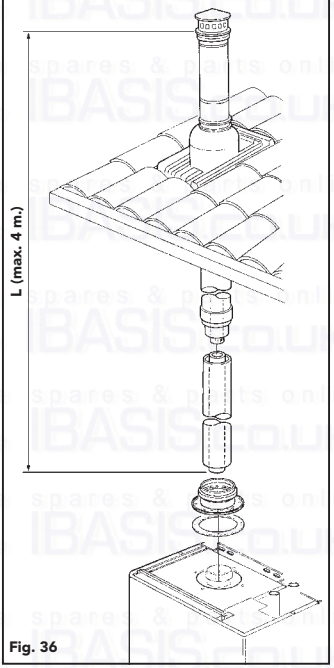

Fig. 36

For the determination of the restrictor, identify your flue pipe configuration (A, B or C) and choose the correct restrictor diameter from the restrictor table below.

Restrictor pipe configuration		Sigma 30-40	Sigma 50-60
A	L ≤ 1m	Ø36	Ø41
	1m < L ≤ 3m	Ø39	Ø46
B	L ≤ 1m	Ø36	Ø41
C	L ≤ 2m	Ø36	Ø41
	L > 2m	Ø39	Ø46

Boiler is fitted as standard with Ø36 and Ø41 restrictor.
For instruction on changing restrictor refer to step 7-10 at pages 14.

2.07.02 Two pipe flue system

1. Utilise the pipes and fittings flows resistance tables on the following pages and calculate the total flow resistance in metres-air, by adding the flow resistances of the components in the whole air-flue system, based on their position (vertical or horizontal, air inlet or flue outlet).
   Please note that the same fitting, identified by a one code (i.e. 1 pipe diameter 80, code KWMA83A), can offer different flow resistances if positioned as air inlet or flue outlet, if placed vertically or horizontally.
   The flow resistance of the special two pipe flue-air adapters do not have to be included in the calculation as they are already included in the maximum length calculation.

IMPORTANT: the pipes and fittings flow resistance (reduction) have been summarised on the following page. The flow resistance values written refer only to Ferroli pipes and fittings.

2. Verify that the total flow resistance calculated is less or equal to 50 meter for Sigma 30 and 50 and 40 meter for Sigma 40 and 60.
3. Choose the more suitable restrictor from table below.

Tab. 3

Total flow resistance	Use restrictor:			
	Sigma 30	Sigma 40	Sigma 50	Sigma 60
0 - 20 metres	Ø36	Ø36	Ø41	Ø41
20 - 30 metres	Ø36	Ø39	Ø41	Ø46
30 - 40 metres	Ø39	Ø39	Ø46	Ø46
40 - 50 metres	Ø39	not possible	Ø46	not possible

Example of calculation for wall inlet/outlet with 2 pipe system maximum total flue length: 40 metres

Tab. 5

Ref.	Description			N° of pieces	Length reduction
1	Connection for concentric pipe cod. KWMR52A			1	/
2	Air/Flue T separator cod. KWMA90U			1	already included
3	Male - Female flue Ø 80 mm	Air	Horizontal	1	1
			Vertical	/	/
4		Flue	Horizontal	1	2
			Vertical	5	5
5	Flue bend 80 mm			1	2,5
6	Air wall terminal outlet flue Ø80			1	5
7	Air wall terminal air Ø80			1	2
				Total	17,5

Total flow resistance 17,5 m:
use restrictor Ø41

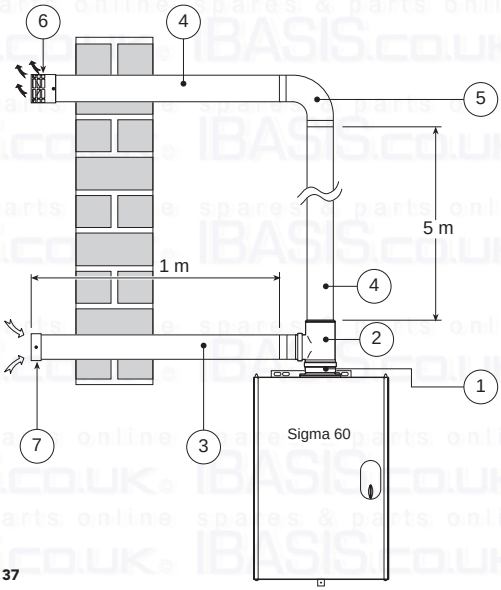

Fig. 37

2.07.03 Terminal Position

Pos.	Minimum spacing	mm
A	Directly below an openable window, air vent, or any other ventilation opening	300
B	Below gutters, soil pipes or drainpipes	75
C	Below Eaves	100
D	Below a Balcony	100
E	From vertical drainpipes or soilpipes	75
F	From internal or external corners	100
G	Above adjacent ground or balcony level	100
H	From a surface facing the terminal	600
I	Facing another terminal	1,200
J	From opening (door/window) in carport into dwelling	1,200
K	Vertically from a terminal on the same wall	300
L	Horizontally from a terminal on the same wall	300
N	Below carport	600

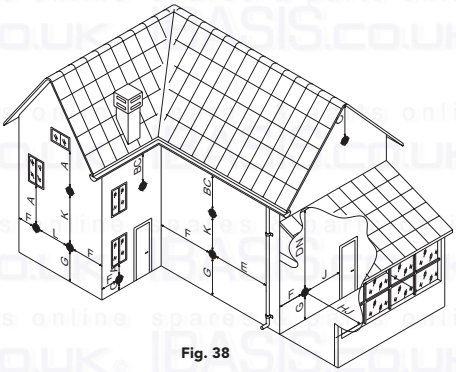

Fig. 38

A Quinnel Barrat and Quinnel guard (part. No. C2) should be screwed to the wall centrally over the terminal, when the distance is less than 2 m from the outside floor.

2.08 Electrical connection

The boiler must be connected to a single phase 230V 50Hz electricity supply with a 3 A max. fuse and a bipolar switch with contact opening of at least 3 mm fitted between the boiler and the electricity supply. The boiler must always be connected to an efficient earth installation. In the electrical box, there is a 3 pole terminal block for connecting the boiler to the mains (230V 50Hz) and a 3 pole block for connecting a circulating pump (not supplied). See Wiring diagram (fig. 41a) for the connection of external control.

When the boiler is connected to an electricity main, it is essential TO ENSURE CORRECT POLARITY (LIVE: brown cable, NEUTRAL: blue cable, EARTH: yellow-green cable).

All wiring must conform to current I.E.E. regulations.

Note: If the power supply cable has to be replaced, use "0.75mm (24/0.20) cable only to BS6500 with a maximum external diameter of 8 mm.

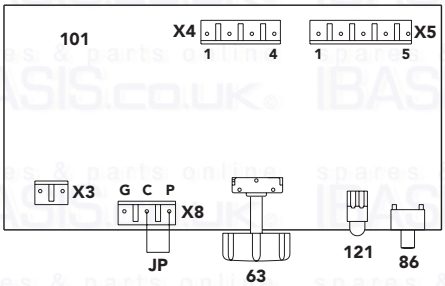

Key

63. CH temperature setting
86. Reset switch
101. Main P.C.B.
121. Boiler shut-down warning (Led)
X3-X4-X5-X8. Connectors
JP. Link

	Temp.	kOhm
Temp. sensor NTC 34	25°C	1000 kOhm
	60°C	185 kOhm
	80°C	80 kOhm

Fig. 39

2.08.01 Schematic wiring diagram for fully pumped system

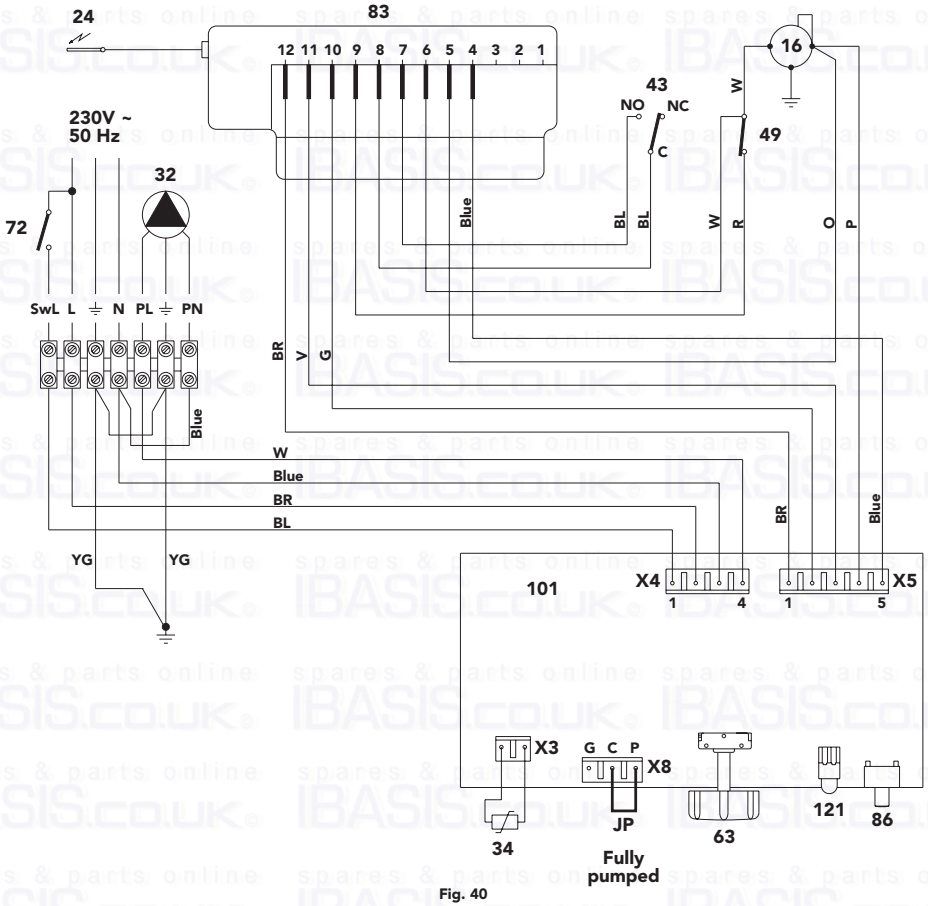

Fig. 40

Key

- **16** Fan
- **24** Spark and sensor electrode
- **32** Central heating pump (not fitted)
- **34** Central heating flow temperature sensor
- **43** Air pressure switch
- **49** Safety thermostat
- **63** C.H. temperature adjustment
- **72** External controls
- **83** Full sequence automatic control on gas valve
- **86** Reset switch
- **101** Main P.C.B.
- **121** Boiler shut-down warning (Led)

Colors key

BR	Brown	**G**	Grey
Blue	Blue	**R**	Red
BL	Black	**V**	Violet
W	White	**P**	Pink
O	Orange	**YG**	Yellow-Green

If there are no external controls fitted, connect the SWL terminal to permanent live in the junction box

3. COMMISSIONING AND TESTING

3.01 Checks to be carried out before starting up for the first time

When firing the boiler up for the first time, it is good practice to check:
that the isolation valves between the boiler and central heating systems are open;
that the central heating system is well filled and vented;
that there are no gas or water leaks from the central heating system or boiler;
that the electric connections are correct and the earth wire of the boiler is connected to an efficient earthing installation;
that there are no inflammable liquids or materials near the boiler;
that the central heating gas pressure and flow rate are as required.

3.02 Starting up the boiler

- Open the gas cock of the boiler.
- Vent air present in the pipe upstream of the gas valve.
- Turn on the switch (if present) or plug upstream of the boiler.
- Rotate the C.H. temperature adjustment knob above Min position.
- Set the room thermostat (if fitted) to maximum.
- At this point, the burner ignites and the boiler starts to function automatically, controlled by its control and safety devices.

Note - If after completing the start-up procedure correctly, the burner fails to ignite and the boiler shut down warning lights up, wait about 15 seconds then press the reset switch. The reset electronic control unit will repeat the start-up cycle. If after a second attempt the burners still fail to ignite, consult the paragraph "Troubleshooting".

Note - If there is a power failure while the boiler is in operation, the burners automatically go out and re-ignite when the power returns.

WARNING

If the system is filled with very cold water, will automatically light due to the frost thermostat sensing the low temperature. The boiler will not shut down, until the water temperature reaches 10°C.

3.03 Shutting down

To shut down the boiler for short periods

- Set the temperature adjustment knob to "Off" position.

To shut down the boiler for long periods

- Turn off gas supply.
- Turn off the electricity supply.

IMPORTANT

The boiler is protected by integral frost protection, but if the boiler is not to be used for a long period of time, the system should be drained.

Note: The frost thermostat operates even if the temperature adjustment knob is in the OFF position and it is necessary therefore, if the system is drained, for the external electrical and gas supplies to be isolated.

It is recommended that a label be affixed to the appliance to draw attention to the fact that the system has been drained.

3.04 Checks and tests after first start-up

Check there are no leaks in the gas and water circuits.
Check correct boiler start up by carrying out start up and shut down tests using the boiler stat.
Check the integrity of the air-flue pipes during boiler operation.
Check that the gas consumption indicated on the meter corresponds to that given in Technical Data (paragraph 1.03).
Check that water is circulating correct. Balance the radiators to ensure that the flow and return differential does not exceed 20°C.

4. ADJUSTMENT

4.01 Adjusting the gas pressure and heat output

The following adjustments must be carried out by qualified personnel only.

To adjust boiler heat input simply adjust the burner pressure gas via the pressure regulator on the gas valve (fig. 41).

Adjust the gas pressure at the burner by turning the pressure regulating screw: turn it clockwise to increase the burner pressure and anticlockwise to decrease it.

The diagrams indicate the variation in heat output to the water as burner working pressure is varied (fig. 42a and 42b). Adjusting boiler output to the actual requirements of the central heating system will minimise boiler cycling thus saving fuel, varying the output has virtually no effect on the efficiency and combustion characteristics of the boiler.

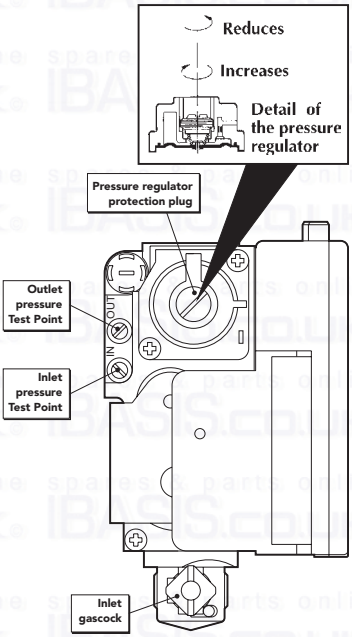

Fig. 41

Note: with LPG (G31) the pressure regulating screw must be all the way in.

Diagram of pressures and outputs with Natural gas (G20)

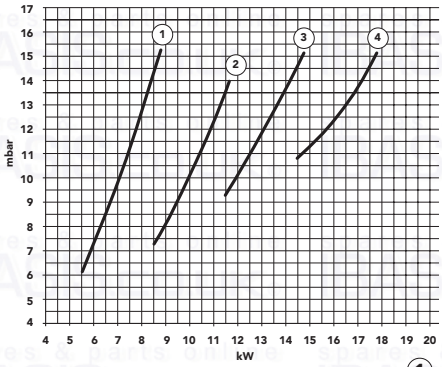

Fig. 42a

Diagram of pressures and outputs with LPG (G31)

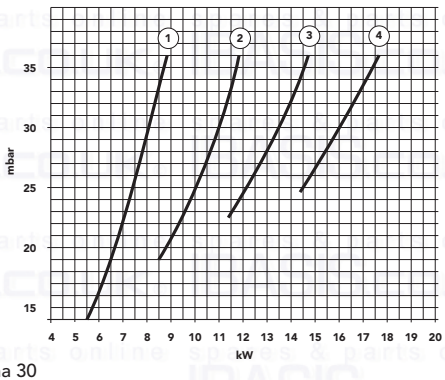

Fig. 42b

(1) = Sigma 30
(2) = Sigma 40
(3) = Sigma 50
(4) = Sigma 60

4.02 Adjusting central heating flow temperature

Central heating water temperature is adjusted by rotating the control knob (fig. 52). Rotate the knob clockwise to increase water temperature, anticlockwise to reduce water temperature. Temperature can be varied from a minimum of 60°C to a maximum of 82°C.
However, we recommend not operating the boiler below 50°C.

4.03 Adjusting room temperature (when a room thermostat is fitted)

Room temperature is controlled by positioning the room thermostat knob to the required value. The thermostat automatically controls the boiler, temporarily interrupting the electrical supply subject to the room heat requirements.

4.04 Adjusting central heating system pressure

The pressure of water in the central heating system is adjusted as described in the paragraph 2.02.07.

N.B. - To avoid incurring unnecessary expense, in the event of boiler shut down, check that this is not caused by a lack of electricity or gas, or low water pressure before calling the Customer Technical Service Helpline.

4.05 Determining combustion efficiency and the composition of the flue gases

On the boiler there are two test points, one for flue gas and the other for air.
To carry out the tests, proceed as follows:

1) Open the air and flue gas test points;
2) Introduce the probes;
3) Switch ON the boiler;

N.B. To ensure correct readings the boiler **must** have reached **normal operating temperature.** Testing the boiler **before thermal equilibrium** has been attained **will give incorrect readings.**

5. GAS CONVERSION

The following adjustment and conversion operations must be carried out by qualified personnel. FERROLI Limited accepts no liability for damage to property or personal injury resulting from tampering with the boiler by unauthorised persons. To convert the boiler from Natural gas to LPG and vice versa, the burner injector must be replaced (see fig. 43). Gas pressures must then be adjusted on the gas valve as described in the paragraph 4.01.

Note: After converting the boiler from natural gas to liquid gas, fit the orange plate in the conversion kit near the data plate.

Note: injector diameters and pressures at the main burner are given in Technical Data (1.03).

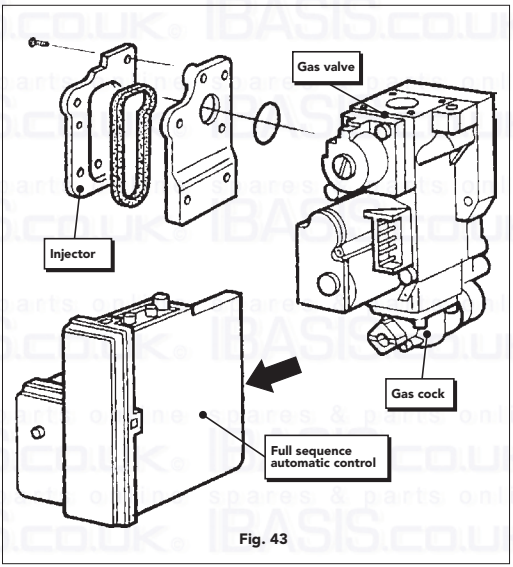

Fig. 43

6. MAINTENANCE AND CLEANING

The following operations must be carried out by Corgi registered engineers only.

6.01 Annual Servicing

The following should be checked at least once a year:

Water pressure in the central heating system when cold should be about 1 bar. If this is not the case, bring it back to this value.
Check control and safety devices (gas valve, thermostats, etc) are functioning correctly.
The burner and heat exchanger must be clean. To avoid damage, always clean them with a soft brush or compressed air. Never use chemical products.
The expansion vessel (if fitted) must be checked.
Check there are no leaks in the gas and water circuits.
Check the air-flue gas duct terminal is free from obstructions and sound.
The electrode must be free from corrosion build up and correctly positioned (see fig. 44).
Gas flow and pressure must correspond to the values given in the Technical Data (paragraph 1.03).
The pump must be free to rotate.

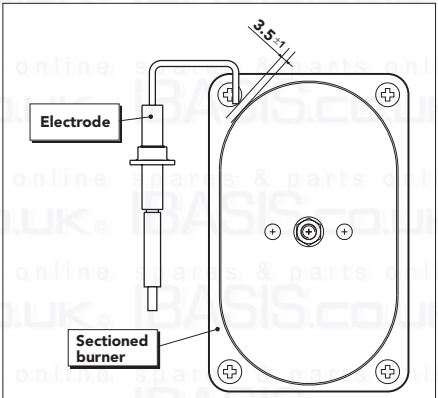

Fig. 44

6.02 Cleaning the boiler and burner

The boiler should be serviced annually. Before starting check the boiler is operating correctly then isolate the electrical and gas supply to the boiler. The heat exchanger may be cleaned by insertion of a thin metal strip e.g. a hack saw blade or steel rule, from above or below. Clean the front and rear fin sections and ensure that any blockages are cleared.
The burner must never be cleaned with chemical products or steel brushes. Particular attention must be paid to all seals and fixings associated with the room-sealed compartment (gaskets, grommets, etc). Air leakage would cause pressure inside the compartment to drop, possibly tripping the differential pressure switch and thus shutting down the boiler. After cleaning particular attention should also be paid to checking stages of start-up and operation of the thermostats, gas valve and pump.
If performing combustion analysis prior to servicing, the CO/CO_2 ratio must not exceed 0.0004. If it does, a full service is required. After a full service the CO/CO_2 ratio must not exceed 0.0008.

6.03 Sigma Servicing Procedure (only to carried out by a competent person)

1) Visually check the boiler for correct installation and flueing.

2) Isolate electricity supply.

3) Remove cover (2 screws at bottom light and pull forward).

4) Carry out preliminary electrical checks at the boiler junction box. This is situated to the right of the sealed compartment and is accessed by lowering the control PCB compartment (1 screw).

Note: The boiler electrical supply will need to be isolated, whilst carrying out polarity checks. Any faults must be rectified before proceeding.

5) If electrical checks prove o/k replace control panel and secure with fixing screw.

6) Using the inlet pressure test point on the gas valve check the inlet WORKING gas pressure, this should be 20 millibar MINIMUM for N.G. and 37 millibar MINIMUM for LPG.
This should be available at all times i.e. when all other gas appliances from the same supply are working fully. If this is not the case, installation may be deemed AT RISK and the gas supply pipework throughout the system may have to be increased in size.

7) If inlet working pressure is ok using the test point on the gas valve marked OUT check the burner pressure. Burner pressures for the required heat output can be obtained from fig. 42a for natural gas and fig. 42b for LPG.
The burner pressure is adjusted by the pressure regulating screw on the gas valve see section 4.01 for detail.

8) Turn off the boiler and isolate the gas and electricity supplies.

9) Remove the sealed compartment cover (4 screw).

10) Remove the fan assembly and clean with a soft brush.

11) Remove combustion chamber front panel (4 screws) lift out flue hood and baffle plate.

12) Slide the burner forward, disconnect the lead from the spark electrode, remove the burner and clean.

13) Clean injector.

14) Clean the heat exchanger with a suitable soft brush. DO NOT DAMAGE THE REAR INSULATION and clean out the combustion chamber.

15) EXAMING seals on the room sealed compartment from panel and if necessary replace.

16) Re-assemble in reverse order.

17) Re instate gas and electric supply.

18) Fire the boiler and check all gas joint for soundness.

19) Re check burner pressure.

20) Check flame picture and all controls for correct operation.

21) Check room sealed cover for leakage.

22) Check all safety devices for correct operating.

23) Check the gas rate to the boiler is correct.

24) If a combustion analyzer is to be used, there are 2 test point on the front of the room sealed cover at the top, the lower one is for the flue gases the upper one for incoming air. The boiler should be operated for at least 10 minutes before carrying out this test.

CO/CO_2 ratio should not exceed 0.004 prior to servicing and 0.008 immediately after servicing.

25) Refit cover and leave boiler set to customer requirements.

7. REPLACEMENT OF PARTS

Before commencing with the replacement of any parts, ensure the gas and electricity are isolated.

7.01 Boiler exploded view

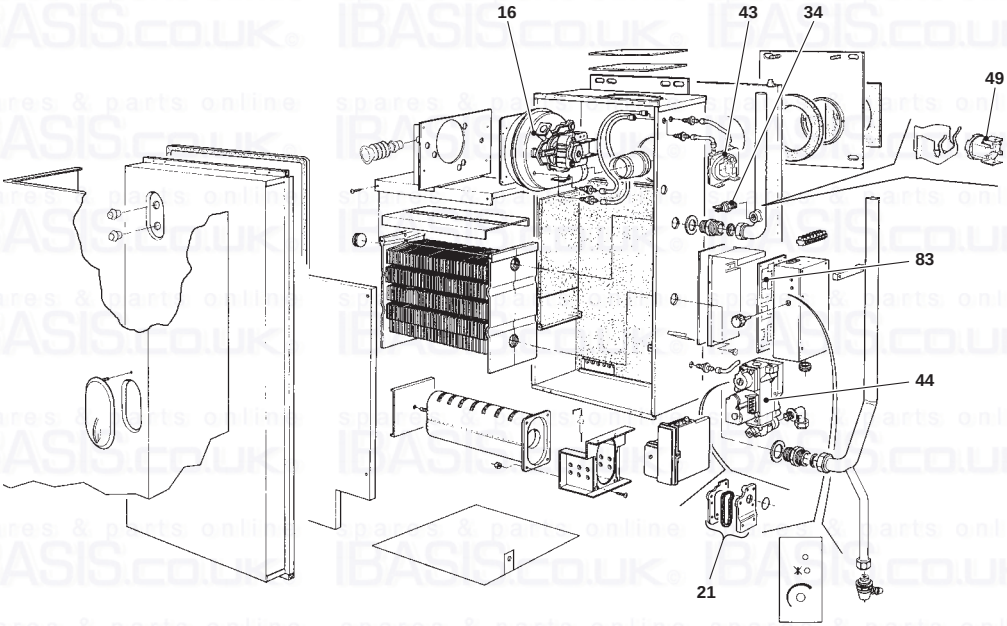

Fig. 45

Short Spares List

Key N°	Description	PART N°	G.C. N°
16	Fan assembly (Sigma 30, 40, 50, 60)	800480	
21	Injector Plate 2.60 (NG) Sigma 30	806295	
"	Injector Plate 3.00 (NG) Sigma 40	806296	
"	Injector Plate 1.60 (LPG) Sigma 30	806297	
"	Injector Plate 1.80 (LPG) Sigma 40	806298	
"	Injector Plate 3.30 (NG) Sigma 50	806283	
"	Injector Plate 3.60 (NG) Sigma 60	806278	
"	Injector Plate 2.10 (LPG) Sigma 50	806284	
"	Injector Plate 2.30 (LPG) Sigma 60	806282	
34	Flow Temperature Sensor NTC. (all models)	806051	
43	Air Pressure Switch (all models)	800150	
44	Gas Valve Honeywell VK 4105 A 1092 1/2" (all models)	806267	
49	Overheat Thermostat (all models)	801240	
83	Full Sequence Control PLB (all models)	806659	

7.03 To remove Outer Cover

a. Remove 3 fixing screws from the bottom of the cover.
b. Gently pull out the sides of the cover at the bottom and lift off the top fixing lugs.

7.04 Removal of Fan Assembly (rear flueing) fig. 46

a. Remove sealed compartment front panel (4 screws **"a"**).
b. Remove 2 **"b"** screws that secure fan assembly to flue hood.
c. Lift flue of locating pin at rear.
d. Pull fan clear of the boiler and remove electrical connection and air pressure switch tubes, noting their relevant position **"c"**.
e. Remove fan unit from mounting bracket (3 screws).
f. Replace in reverse order.

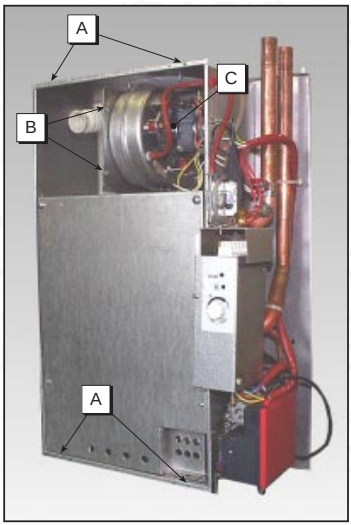

Fig. 46

7.05 Overheat Thermostat (fig. 47)

a. Pull overheat thermostat and securing clip **"c"** off the flow pipe.
b. Remove securing clip and electrical leads from the overheat thermostat.
c. Replace in reverse order adding more heat sink compound if necessary.

7.06 Air Pressure Switch Removal (fig. 47)

a. Remove electrical connection and tubes from the air pressure switch, noting their position.
b. Remove the 2 screws **"a"** that secure the air pressure switch to the electrical contacts cover.
c. Replace in reverse order.

7.07 Temperature Sensor (fig.47)

a. Remove electrical connection from sensor.
b. Drain off the water from the boiler using the drain tap.
c. Unscrew sensor from flow pipe.
d. Replace in reverse order, ensuring both pins **"b"** are engaged on the sensor.

7.08 Burner Removal (fig. 48)

a. Remove combustion chamber front panel (4 screws).
b. Gently pull burner **"a"** forward or far as the ignition lead **"b"** will allow.
c. Remove ignition lead **"b"** from electrode.
d. Replace in reverse order.

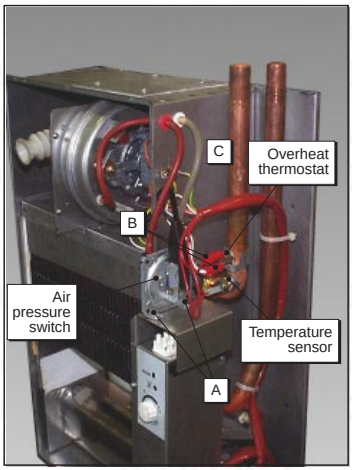

Fig. 47

7.09 Gas Valve (fig. 49)

a. Remove 4 screws **"a"** that secure the gas inlet isolation cock to the bottom of the gas valve.
b. Remove the full sequence PCB **"b"** and housing from the gas valve (1 screw) and place to one side.
c. Remove balance tube and earth lead from the gas valve.
d. From inside the combustion chamber remove the 3 screws **"c"** which hold the gas valve in place.
e. Remove gas valve and replace in reverse order.

7.10 Control PCB (fig. 50)

a. Turn boiler thermostat down to the off position and pull the thermostat knob off **"a"**.
b. Remove fixing screw securing the control PCB **"b"** housing in place and hinge down the housing.
c. Remove the electrical connections from the PCB, noting their position.
d. Remove the 2 plastic nuts from outside the housing that hold the fixing pins in place and gently push the pin inside the housing.
e. Very carefully, push the reset button **"c"** inside the housing and remove the PCB.
f. Remove the fixing pins from the PCB and swap over to the replacement.
g. Replace in reverse order.

7.11 Heat Exchanger (fig. 51)

a. Lift fan and flue hood assembly **"a"** out of boiler, remove all connection from the fan, noting positions.
b. Remove air pressure switch **"b"**.
c. Drop control PCB compartment out of the way **"c"**.
d. Disconnect flow and return unions **"d"** from heat exchanger.
e. Remove heat exchanger connection nipples and lift out heat exchanger.
f. Replace in reverse order.

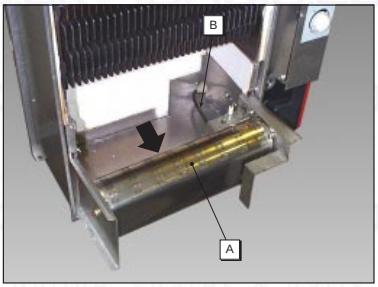

Fig. 48

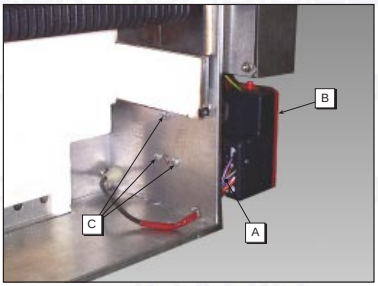

Fig. 49

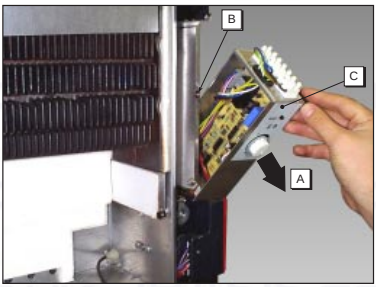

Fig. 50

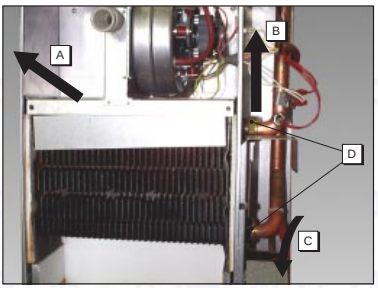

Fig. 51

8. FAULT FINDING

Before commencing any fault finding procedure on the boiler, ensure electricity is on to the appliance, the gas supply is turned on, purged and is sound, and the system is full of water.
Note: in certain condition the fan and overheat thermostat may have 230 v at their terminals, but the fan will not run.
Intermittent problem may be due to the temperature sensor breaking down when under load although the resistance value may be within the stated range.
Sticking gas valves may lead to boiler lock out problems. It is not possible to test for power to the gas valve due to the nature of the plug on sequence board.

8.01 Boiler Operating Sequence

Permanent live to boiler
Switched live from controls read
Boiler thermostat calling
Temperature sensor calling
When all the above is present, the pump connection becomes live and the pump runs.
The grey wire of the control board on X5 becomes live, 230 v.
Air pressure switch has 230 v to the normally open (N.O.) contact.
Fan motor and overheat thermostat have 230 v al both terminals to earth.
If the air pressure switch is open circuit between its N.O. and common contact, the voltage at the overheat thermostat to earth drops to almost zero. The white wire of the fan becomes a neutral and the fan runs.
The air pressure switch operates to make a circuit between its N.O. and common contacts.
If the overheat thermostat is closed circuit the ignition electrode will spark the gas, valve opens and the burner lights.

8.02 Troubleshooting - Quick reference guide

N.B.: To avoid incurring unnecessary expense, in the event of boiler shut down, check that this is not caused by a lack of electricity, gas or low water pressure before calling the Customer Technical Service.

PROBLEM	CAUSE and REMEDY
Boiler lockout	After a number of attempts at ignition, the electronic unit always shuts down the boiler *Check that the flue is clear and fitted correctly and that air has been vented from the pipes - polarity is correct* *Check that the electrode is positioned correctly and free from corrosion deposits*
Burner fails to ignite	No electricity *Wait for electricity to be restored* Blocked injector *Clean injector* Faulty flow temperature sensor *Replace flow temperature sensor* Faulty gas valve *Repair or replace gas valve* Fan not running *Check that electricity is reaching the fan* Faulty pressure switch or obstructed pipes *Replace the pressure switch or clear the pipes*
No spark to the electrode	During the ignition phase, there is no spark to the electrode *Check the boiler is connected to the mains and is efficiently earthed*

	Check the safety thermostat *Check the electrode is positioned correctly and free from corrosion deposits* *Control thermostat set too low* *Check the electric supply* *Check the electronic control unit* *Check the live-neutral wires are not reversed*
Burner goes out	Insufficient gas supply *Check gas pressure to main burner* Boiler dirty *Check and clean heat exchanger* Burner or injector dirty *Check and clean burner or injector* Faulty flow temperature sensor *Replace flow temperature sensor*
Boiler operates but temperature fails to rise	Incorrect gas pressure *Check for correct gas consumption* Boiler dirty *Check and clean heat exchanger* Boiler inadequate *Check that the boiler is correctly sized for the requirements of the central heating system*
Condensate in boiler	Thermostat set too low *Adjust thermostat to a higher temperature (more than 50°C)* Incorrect gas rate *Check that gas consumption is correct and adjust pressure if necessary*
Boiler sooting	Faulty flame adjustment *Check that the burner flame is adjusted correctly and that gas consumption is correct for the boiler output* Burner air ports blocked *Clear air ports*
Radiators cold in winter	Faulty flow temperature sensor *Replace flow temperature sensor* Room thermostat set too low or faulty *Adjust knob to a higher temperature and if necessary replace stat* Pump is stuck and fails to rotate *Free the pump by removing the top and rotating the shaft with a screwdriver* The pump does not rotate *Replace the condenser or pump after checking electricity supply*

8.03 General test and fault finding chart

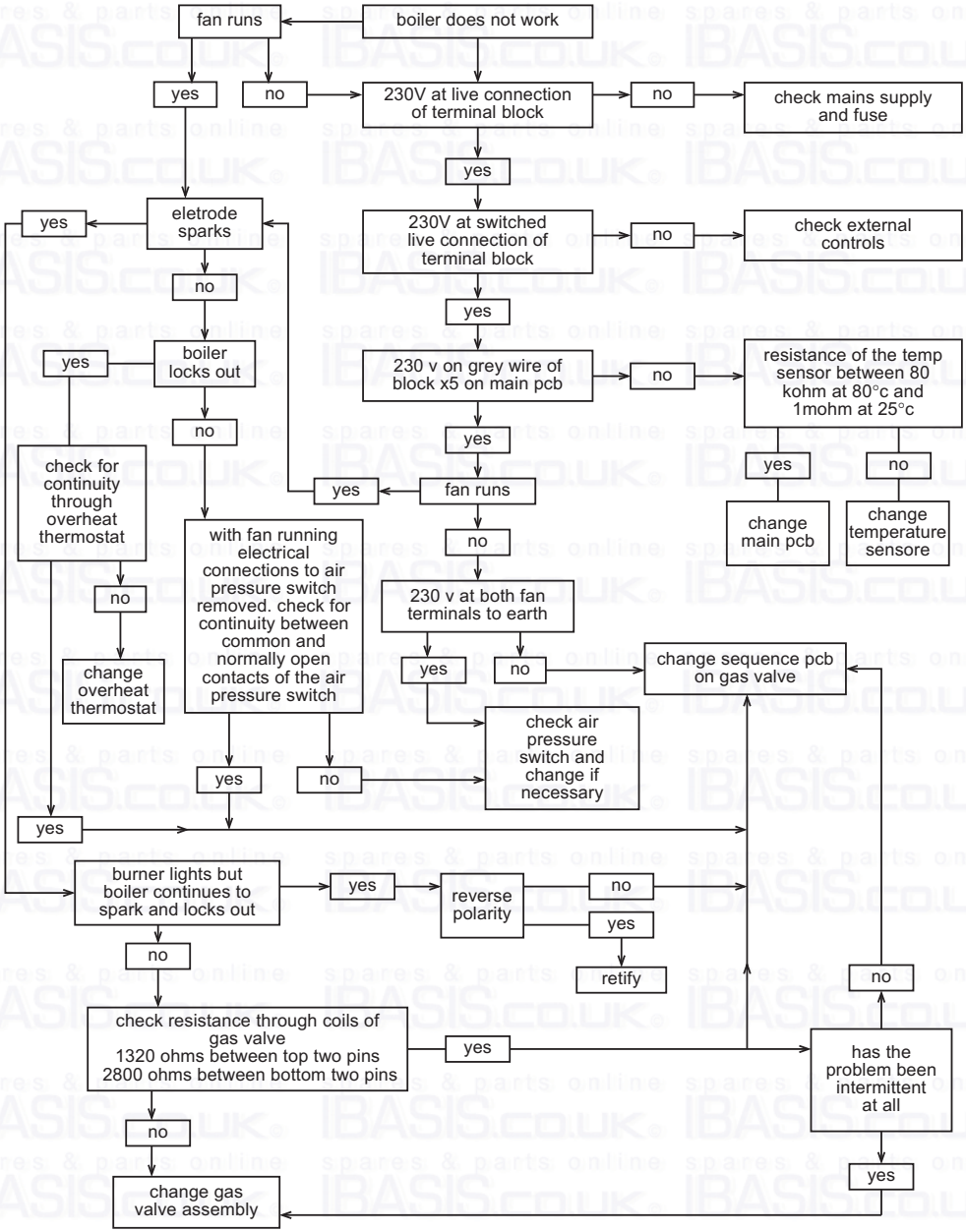

9. USER INSTRUCTIONS

The boiler is designed for use with two types of gas: natural gas NG or propane (LPG). The type of gas can be selected when purchasing the boiler or the appliance can be converted later on site by a competent person. It operates with technologically advanced systems such as electronic adjustment, safety and control devices.
The boiler is fitted with automatic electronic ignition so there is no pilot to worry about.

Operating:
Turn up the cover to reveal the control panel.
Make sure that the gas, water and electricity supplies to the boiler are turned on.

To obtain heating from the boiler, turn the temperature regulator (2) clockwise to the desired position, ensure that any other heating controls e.g. room thermostats, clock etc. are in the on position.

The boiler flow temperature is adjusted by from panel knob (see fig. 42) from 60°C to 82°C.
Once the flow temperature reached set value, the burner goes out and the electronic system imposes a delay of 3 minutes before allowing re-ignition. Once heat demand is finished, pump and burner go out.
In "gravity circulation system" (see paragraph 3.07) the pump signal is an input for electronic device. If the pump is not running and there is heat demand the temperature control is set on 50°C and after 3 minutes slow start time, this level switches to a fixed value of 70°C. With the knob in "OFF" position the call for heat is disabled; but if the temperature in the ambient comes below 5°C, a frost protection overrules the off-state and a heat demand is generated.

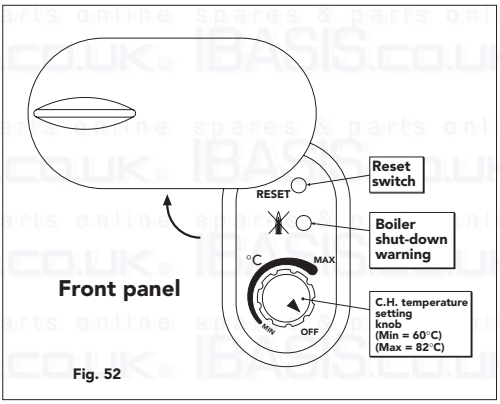

Fig. 52

IMPORTANT

Your "benchmark" Installation, Commissioning and Service Record Log Book will be enclosed in your customer information pack.
"This record must be completed and left with the end user"

Ferroli is a member of the Benchmark initiative and fully supports the aims of the programme. Benchmark has been introduced to improve the standards of installation and commissioning of central heating systems in the UK and to encourage the regular servicing of all central heating systems to ensure safety and efficiency.

"All CORGI Registered Installers carry a CORGI ID card and have a registration number. Both should be recorded in your central heating log book. You can check the installer's CORGI registration by calling CORGI on 01256 372300".

Should you require help with any difficulties call our Technical Service Helpline on

0121 352 3200

Phone numbers:

Installer _____

Service Engineer _____

BECAUSE OF OUR CONSTANT ENDEAVOUR FOR IMPROVEMENT DETAILS MAY VARY SLIGHTLY FROM THOSE QUOTED IN THESE INSTRUCTIONS.

FERROLI S.p.A.

ALL SPECIFICATIONS SUBJECT TO CHANGE

Please note - to avoid incurring unnecessary expense, in the event of a boiler shut down, check this in not caused by lack of electricity supply, gas supply or low water pressure before calling our Customer Service Helpline.

Stockton Close, Minworth Industrial Park, Minworth, Sutton Coldfield, West Midlands B76 8DH

Tel: 0121 352 3200 Fax: 0121 352 3210

spares & parts online IBASIS.CO.UK