Ferroli

GRUPPO FERROLI

FERROLI F 24 B

wall-mounted gas fired,
condensing combination boiler

ISO 9001 : 2000
CERTIFIED COMPANY
TÜV CERT
DIN EN ISO 9001

Seasonal Efficiency (SEDBUK) band B

CE

INSTRUCTIONS FOR USE, INSTALLATION AND MAINTENANCE

cod. 3540B29/1 - 04/2005

spares & parts online IBASIS.CO.UK

IMPORTANT

Your "benchmark" Installation, Commissioning and Service Record Log Book is enclosed in the last pages of this manual. "This record must be completed and left with the end user".

Ferroli is a member of the Benchmark initiative and fully supports the aims of the programme. Benchmark has been introduced to improve the standards of installation and commissioning of central heating systems in the UK and to encourage the regular servicing of all central heating systems to ensure safety and efficiency.
Please see installation and servicing guidelines.

⚠	This symbol indicates **"Caution"** and is placed next to all safety information. Strictly follow these instructions in order to avoid danger and damage to persons or property.
☞	This symbols calls attention to a note or important information, please read thourougly.

⚠

- Read the warnings given in this manual thoroughly. They provide important information for safe installation, use and maintenance
- The instruction manual, by law must be left with the end user.
- If the appliance is sold or transferred to another owner or if the owner moves, leaving the appliance behind, always ensure that the manual is kept with the appliance for consultation by the new owner and /or installer.
- Incorrect installation or poor maintenance absolves the manufacturer from all liability for damage to persons and property.
- Installation and maintenance must be carried out in accordance with current legislation, according to the manufacturer's instructions and by qualified corgi registered engineer.
- Before service or maintenance work is carried out isolate the appliance from the mains electricity supply.
- In the event of malfunction or faulty operation, isolate the appliance. Do not attempt to repair or carry out any other operation on the appliance directly. Contact Ferroli or a qualified engineer only.
- Repairs or the replacement of components must be carried out exclusively by qualified personnel using original spare parts only. Failure to adhere to the above may compromise the safety of the appliance.
- To guarantee efficient operation, the appliance must be serviced once a year by a Corgi registered engineer.
- The appliance may not be used for purposes other than those for which it was explicitly designed.
- Incorrect installation and use or failure to follow the instructions provided by the manufacturer absolve the manufacturer from all liability for damage.
- After unpacking, check that the contents are correct and undamaged.
- Keep packing out of reach of children as it could be potentially hazardous.
- To clean external parts, use a damp cloth moistened with soapy water if necessary. Avoid using abrasive cleaning products and solvents.

Declaration of conformity

CE

Manufacturer: FERROLI S.p.A.
Address: Via Ritonda 78/a 37047 San Bonifacio VR Italy
declares that this unit complies with the following EU directives:

- Gas Appliance Directive 90/396
- Efficiency Directive 92/42
- Low Voltage Directive 73/23 (amended by 93/68)
- Electromagnetic Compatibility Directive 89/336 (amended by 93/68)

President and Legal Representative
Cav. del Lavoro
Dante Ferroli

1. OPERATING INSTRUCTIONS 4

1.1 Introduction 4
1.2 Control panel 5
1.3 Operating instructions 6
1.4 Adjustments 6
1.5 Maintenance 7
1.6 Faults 7
1.7 Time Clock 8

2. INSTALLATION 9

2.1 General Instructions 9
2.2 Boiler location 10
2.3 Boiler water connections 12
2.4 Connection to the gas system 14
2.5 Electrical Connections 14
2.6 Flue system 15
2.7 Condensate outlet connection 22

3. SERVICE AND MAINTENANCE 24

3.1 Adjustments 24
3.2 Initial start-up 26
3.3 Maintenance 27
3.4 Troubleshooting 29

4 TECHNICAL CHARACTERISTICS AND DATA 33

4.1 Dimensions and connections 33
4.2 General view and main components 34
4.3 Hydraulic diagram 35
4.4 Technical data table 36
4.5 Diagrams 37
4.6 Wiring diagram 38

Benchmark 40

1. OPERATING INSTRUCTIONS

1.1 Introduction

Dear Customer,

Thank you for choosing **FERROLI F 24 B**, a FERROLI wall-mounting boiler featuring advanced design and technology, high reliability and quality construction. Please read this manual carefully and keep it for future reference.

FERROLI F 24 B is a **high-efficiency** condensing appliance for heating and hot water production running on natural or liquefied petroleum gas (configurable at the time of installation) and regulated by an advanced **microprocessor** control system.

The boiler shell consists of a primary copper laminar heat exchanger, a secondary aluminium heat exchanger providing effective condensation of the water vapour contained in the flue gases, and **burner** equipped with electronic ignition and ionization flame control.

The boiler is totally **room sealed** from the installation room: the air needed for combustion is drawn from outside. The boiler also includes a fan, modulating gas valve, pump, expansion vessel, flow meter, safety valve, flow sensor, temperature sensors, a safety thermostat and a low pressure sensor.

Thanks to the **microprocessor** control and adjustment system with advanced self-diagnosis, unit operation is for the most part automatic. The power for heating is automatically governed by the control system according to the indoor characteristics of the building and its location. The power for hot water is automatically and continually governed to ensure a fast delivery and comfort under all operating conditions.

The user only has to set the temperature desired inside the home (by means of an optional room thermostat, which is required under the building regulations 2002) or regulate the temperature of the system, and set the desired outlet temperature for the hot water. The adjustment and control system will provide optimum operation throughout the year.

1.2 Control panel

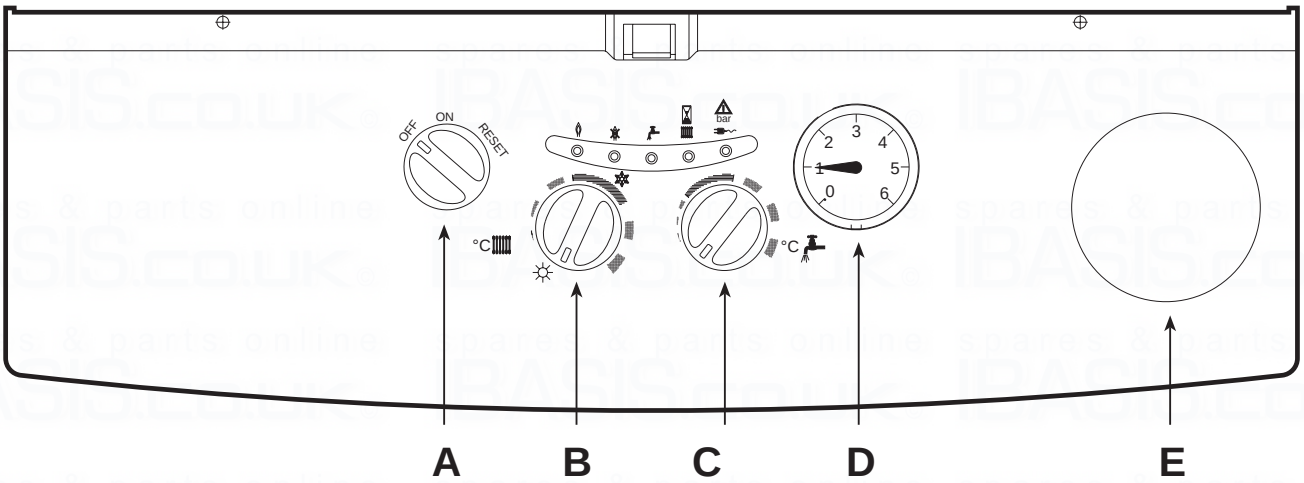

LED		1 2 3 4 5
1		Burner on indicator
2		Boiler shut down warning
3		Domestic hot water circuit on
4		Central heating stand-by *(Flashing light)* Central heating circuit on *(Permanent light)*
5	bar	Insufficient pressure in central heating system *(Flashing light)* Electric power supply *(Permanent light)*

KEY	DESCRIPTION
A	Switch OFF/ON/RESET
B	Central heating flow temperature regulation
C	D.H.W. temperature regulation
D	Water pressure gauge
E	Time clock

Fig. 1

The boiler is designed for use with two types of gas: natural gas NG or propane (LPG). The type of gas can be selected when purchasing the boiler or the appliance can be converted later on site by a competent person. It operates with technologically advanced systems such as electronic control, safety and control devices.

The boiler is fitted with automatic electronic ignition so there is no pilot to worry about.

Pull down cover to reveal control facia panel.

1.3 Operating instructions

Ignition

- Open the gas isolation valve upstream of the boiler.
- Purge the air from the pipe upstream of the gas valve.
- Ensure power is on to appliance.
- Turn the switch **A** (fig. 1) to the **ON** position.
- The boiler is now ready to function automatically whenever hot water is drawn or the clock and room thermostat calls for heating.

Turning off

Turn the switch **A** (fig. 1) to the **OFF** position.

☞ When the boiler is turned off with this button, the P.C.B. is no longer powered and the frost protection will be disable.
Close the gas cock upstream of the boiler and disconnect the electrical power supply.

⚠ To avoid damage caused by freezing during long shutdowns in winter, it is advisable to drain all water from the boiler, the tap water and the system water.

1.4 Adjustments

Room temperature adjustment (with optional room thermostat)

Using the room thermostat, set the temperature desired in the room. Controlled by the room thermostat, the boiler lights and heats the system water to the set system setpoint temperature. The burner shuts down when the desired temperature in the rooms is reached.

☞ A room thermostat is a mandatory requirment (building regulations Doc "L" 2002).

C.H. temperature adjustment

To set the system flow temperature, use the C.H. control knob **B** (fig. 1). Turning it clockwise increases the temperature, turning it anticlockwise decreases it.

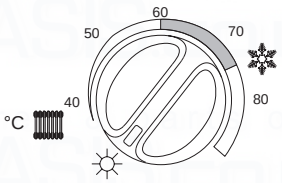

Domestic hot water temperature adjustment

To set the hot water temperature, use the D.H.W. control knob **C** (fig. 1). Turning it clockwise increases the temperature, turning it anticlockwise decreases it.

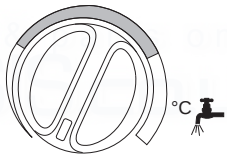

Hot Water Only - "SUMMER" (☼)

To obtain hot water only from the boiler, turn switch (**A** fig. 1) to the on position. The top green light on the left side of the control panel is illuminated (power on).

Turn the temperature regulator (**B** fig. 1) to the ☼ position. Open a hot water tap, green light (tap symbol) comes on, fan starts and burner will light. Indicated by flame symbol, green light coming on. The temperature of the hot water can be adjusted by turning the hot water thermostat (**C** fig. 1) clockwise to increase and anti-clockwise to decrease the water temperature.

Heating and Hot Water - "WINTER" ( )

To obtain heating from the boiler, turn the temperature regulator (**B** fig. 1) clockwise to the maximum position, ensure that any other heating controls e.g. room thermostats, clock etc. are in the on position.

The boiler may be in heating delay of three minutes as indicated by the red light (egg timer symbol) on the left of the facia panel. When this light goes out the green light (radiator symbol) will come on. The fan and pump will run and the burner will light indicated by the green flame symbol light. Adjust the temperature regulator to the desired setting. (In winter do not run boiler below 50°C). If a hot water tap is opened whilst the boiler is running for heating the pump will stop, suspending the heating phase and the boiler will give priority to hot water production. When the tap is closed the boiler will go into a three minute delay cycle before resuming for heating.

Frost Protection

In cold weather the boiler may appear to run when there is no demand for heating (i.e. clocks or room thermostats turned off). This is due to the central heating sensor going into frost protection mode. Once the boiler has reached 14°C or more it will close down until either the temperature again falls below 7°C or the clock or room thermostat is turned on.

For this reason we recommend that the electricity to the boiler is left turned on. If you wish to turn off the electricity to the boiler in winter you should drain completely the heating and hot water circuits.

1.5 Maintenance

It is strongly recommended to carry out annual maintenance on the boiler and the heating system. Please refer to the "maintenance" section in this manual.

The casing, the control panel and the aesthetic parts of the boiler can be cleaned using a soft and damp cloth.

Do not use abrasives or solvents.

1.6 Faults

Low water pressure

Low pressure will be indicated by flashing light in the middle of the facia illuminating (bar).

The boiler pressure gauge (**D** fig. 1) should read at least 1 bar.

Boiler lock out

In the event of the red lockout light ( ) coming on, the on/off/reset switch (**A** fig. 1) should be turned clockwise against the spring tension to the reset position and released (this will put the boiler into three minute delay if in the heating mode). Check gas supply or condensate discarge. Clean condensate discharge if dyirty or obstructed. If the lockout light ( ) illuminates repeatedly, contact an approved Férroli service engineer.

If the problem remains after two attempts at resetting, contact the Ferroli Service Centre.

For other faults, refer to section 3.4 "Troubleshooting."

Before calling the Ferroli service centre, check that the problem is not due to an installation error or a problem with the gas/electricity or low water pressure in the system.

1.7 Time Clock

A 24 hour time clock is fitted to the boiler to control the central heating, this will come into operation when the selector switch is turned to the position marked "heating timed and hot water".

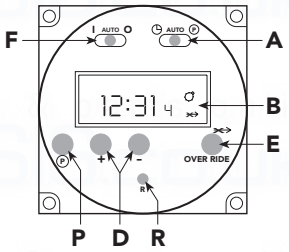

A Slide switch: set clock - auto - set programme
B Display. Symbol in Display = Timer ON
P Select programme ON/OFF 1.....8
D Push buttons Time + Time –
E Override: Boiler will switch ON if it is OFF; and OFF if it is ON
F I=Heating continuous - AUTO=Heating timed - O=Heating disabled
R Reset (with pencil) only with switch **A** in set clock position

To set time of day

1. Slide switch (**A**) to left position
2. Using button + and – adjust until the correct time is shown on display (**B**).

Pre Set Programmes. The timer is pre programmed with 3 ON and 3 OFF times.

6:30 - 8:30
12:00 - 12:00
16:30 : 22:30

If these are suitable no programming is required and the slide switch (**A**) can be moved to the Auto position and the central heating will be ON for these periods.
(12:00 - 12:00 will not switch on the boiler)

To Set Own ON and OFF times. Symbol in Display = ON time

1. Slide switch (**A**) to right position (**P**)
Display 6:30 1

2. Press button (**P**)
Display 8:30 2

3. Press button (**P**)
Display 12:00 3

4. Press button (**P**)
Display 12:00 4

5. Press button (**P**)
Display 16:30 5

6. Press button (**P**)
Display 22:30 6

7. The timer can be programmed with up to 8 ON and 8 OFF times by repeating the above procedure.

1.1 Use buttons + and - to set 1st ON time eg. 6:00
Display 6:00 1

2.1 Use buttons + and - to set OFF time, eg. 9:00
Display 9:00 2

3.1 Use button + and - to set 2nd ON time, eg. 12:30
Display 12:30 3

4.1 Use button + and - to set 2nd OFF time eg. 14:00
Display 14:00 4

5.1 Use button + and - to set 3rd ON time, eg. 16:00
Display 16:00 5

6.1 Use button + and - to set 3rd OFF time eg. 23:30
Display 23:30 6

8. On completion of programming slide switch (**A**) to Auto position, the time of day will be displayed and the central heating will switch ON and OFF according to the programme set.

Over ride

By pressing the over ride button (**E**) the timer programme is over ridden ie, if programme is in OFF time it will come ON and if in ON time will go OFF.
The timer will revert back to it set programme on reaching the next ON or OFF time.
When the programme is on over ride the sign will be shown in the display window (**B**).

Reset Button

By the use of a pencil the reset button can be pushed (**R**). This will clear all programmes apart from those factory pre set.
Reset is only possible with switch (A) in set Clock position!

2. INSTALLATION

2.1 General Instructions

This device must only be used for the purpose for which it is specially designed. This unit is designed to heat water to a temperature below boiling point and must be connected to a heating system and/or a water supply system for domestic use, compatible with its performance, characteristics and its heating capacity. Any other use is considered improper.

BOILER INSTALLATION MUST ONLY BE PERFORMED BY QUALIFIED PERSONNEL, IN ACCORDANCE WITH ALL THE INSTRUCTIONS GIVEN IN THIS TECHNICAL MANUAL, THE PROVISIONS OF CURRENT LAW, THE RECOMENDATION OF BS STANDARDS, ANY LOCAL REGULATIONS AND THE RULES OF COMPEDENT WORKMANSHIP.

Incorrect installation can cause damage or physical injury for which the manufacturer declines any responsibility.

This appliance must be installed strictly in accordance with these instructions and regulations:

The Gas Safety Regulations (Installations & Use).
The Local Building Regulations.
The Building Regulations (Part L).
The Buildings Standards (Scotland - Consolidated) Regulations.
British Standards Codes of Practice:

B.S. 5440 Part 1 Flues
B.S. 5440 Part 2 Air supply
B.S. 5449 FORCED CIRCULATION HOT WATER SYSTEMS
B.S. 6798 INSTALLATION OF GAS FIRED HOT WATER BOILERS
B.S. 6891 GAS INSTALLATIONS
B.S. 7671 IEE WIRING REGULATIONS
B.S. 4814 SPECIFICATION FOR EXPANSION VESSELS
B.S. 5482 INSTALLATION OF LPG
B.S. 7593 TREATMENT OF WATER IN DOMESTIC HOT WATER CENTRAL HEATING SYSTEMS
B.S. 5546 INSTALLATION OF HOT WATER SUPPLIES FOR DOMESTIC PURPOSES

Model Water Bye Laws
B.S. 5955-8 PLASTIC PIPEWORK INSTALLATION

For Northern Ireland the rules in force apply

2.2 Boiler location

The unit's combustion circuit is sealed off from the installation room. The installation room must be sufficiently well ventilated to prevent any dangerous conditions from forming in the event of even slight gas leakage. This safety standard is required by the EEC Directive no. 90/396 for all gas units, including those with a so-called sealed chamber.

Therefore the place of installation must be free of dust, flammable materials or objects or corrosive gases. The room must be dry and not subject to freezing.

The boiler is design to be installed on a solid wall. The wall fixing must ensure a stable and effective support for the appliance, using the bracket and fixings supplied.

If the unit is enclosed in cupboard or mounted alongside, there must be space for normal maintenance work. Fig. 2 and tab. 1 give the minimum clearances to leave around the unit.

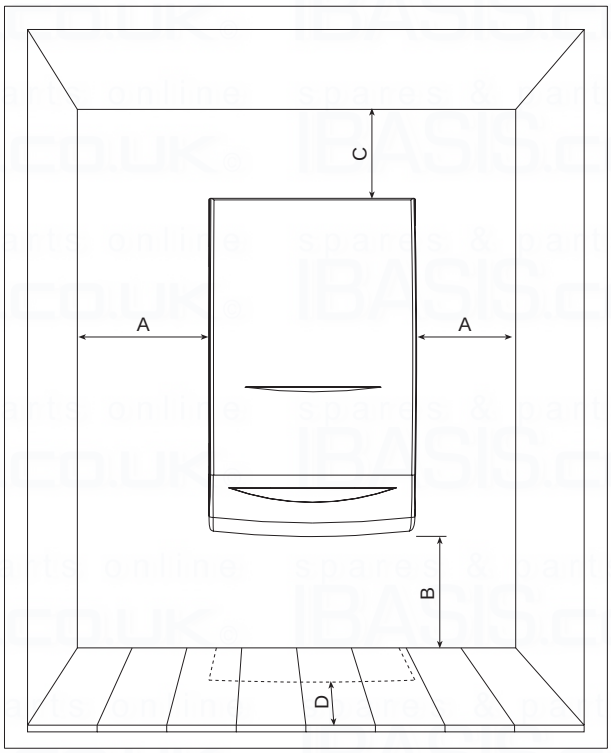

fig. 2

Table 1

	Minimum
A	5 cm
B	20 cm
C	20 cm
D	60 cm (via an openable panel)

Drilling Template (Top Flue Application)

Select suitable mounting position for boiler, using the template mark flue outlet and boiler mounting points. Drill two 10mm holes 70mm deep to accept the wall plugs. Fit standard wall plugs on the left and right side and the special wall plug in the middle (fig. 3). Fix the wall bracket to the wall using standard lock nut (M8) on both sides. Mount the boiler on the wall bracket and fix using the special antitheft nut (M8) as described in the fig. 3. Using a core drill cut a 118mm diameter hole for the flue.

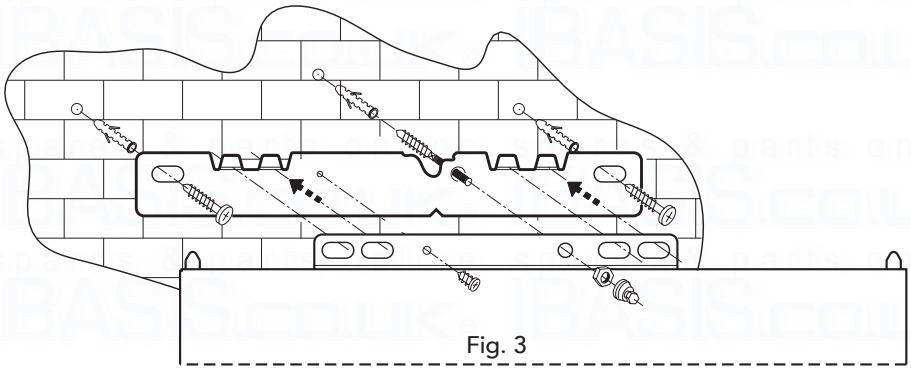

Fig. 3

Make Up Water

Provision must be made for replacing water lost from the sealed system. Reference should be made to BS6798, for methods of filling and making up sealed systems. There must be no direct connection between the boiler's central heating system and the mains water supply. The use of mains water to charge and pressurise the system directly, is conditional upon the Local Water Byelaws. Again any such connection must be disconnected after use. The supplied temporary filling loop is shown in fig. 5. Ensure the filling point is on the return pipe to the boiler.

Attention - is drawn to the Model Water Byelaws.

Fittings manufactured from duplex (alpha-beta) brass are not acceptable for underground use and certain water undertakings will not accept their use above ground.

Ensure all pipework is adequately supported

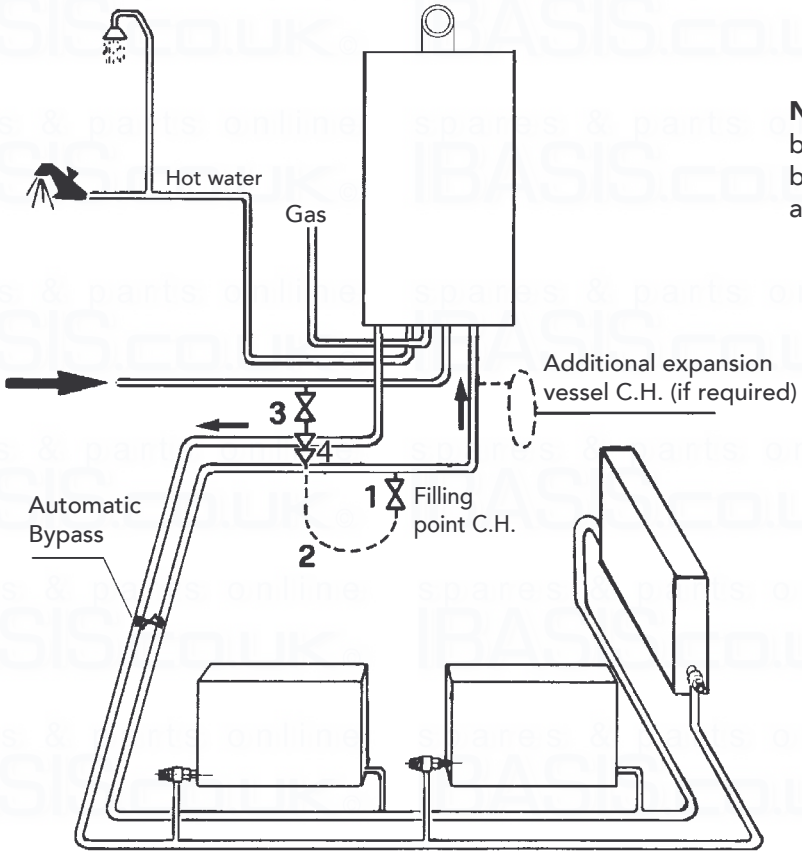

NOTE: An automatic bypass must be fitted as far as possible from the boiler if thermostatic radiator valves are fitted thoughout.

Fig. 4

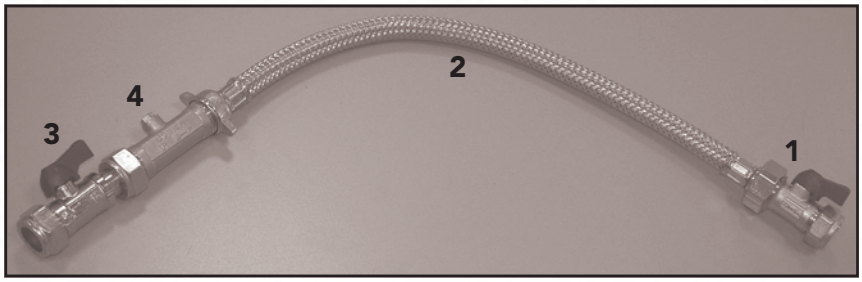

Key

1. Filling point C.H.
2. Temporary connection
3. Cold water supply
4. Double check valve

Fig. 5

2.3 Boiler water connections

The heating capacity of the unit should be previously established by calculating the building's heat requirement according to current regulations. For good operation and long life of the boiler, the plumbing system must be well proportioned and always complete with all those accessories that guarantee regular operation and running, room thermostat, trv's and automatic bypass.

If the delivery and return pipes follow a path where air pockets could form in certain places, it is esential to install vent valves at these points. Also, install a type "A" drain cock device at the lowest point in the system to allow its complete draining.

The temperature differential between the flow manifold and the return to the boiler should not exceed 20° C.

A minimum flow of 6 litres/min is requied through the heat exchanger, it is therefore essential to fit a automatic bypass a min of 3 meters away from the appliance, calibrated on site.

Do not use the water system pipes to earth electrical appliances.

Before installation, carefully flush all the pipes of the heating system to remove residues or impurities that could affect the unit's good working (BS 7593 Building regs Doc L).

Make the connections to the appliance as shown in fig. 6.

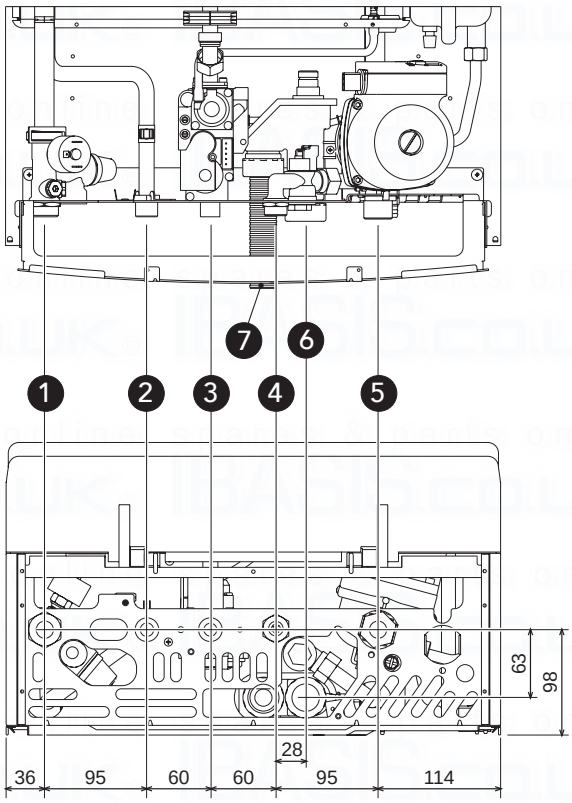

fig. 6

Key

1 System flow (22 mm with isolation valve fitted)
2 DHW outlet (15 mm with isolation valve fitted)
3 Gas inlet (22 mm with isolation valve fitted)
4 Cold main inlet (15 mm with isolation valve fitted)
5 System return - 22 mm with isolation valve fitted (c/w filter)
6 System drain
7 Condense outlet

It is essential to install the isolation valves supplied between the boiler and heating system, allowing the boiler to be isolated from the system if necessary.

The safety valve outlet must be connected to a 15 mm pipe to allow system water out onto the ground in the event of over-pressure in the heating circuit. If this is not done, and the drain valve trips and floods the room, the boiler manufacturer is not to be held responsible. The outlet should face back against the outer brickwork or building face to prevent harm or injury from hot water discharging in the evet of an over-pressuried system.

Make the boiler connection in such a way that its internal pipes are free of stress. If a check valve is installed on the tap water circuit (where applicable), it is necessary to mount a safety valve between the boiler and this circuit (check valve minimum 3 meters from boiler).

The connecting kits shown in fig. 7 are supplied as standard.

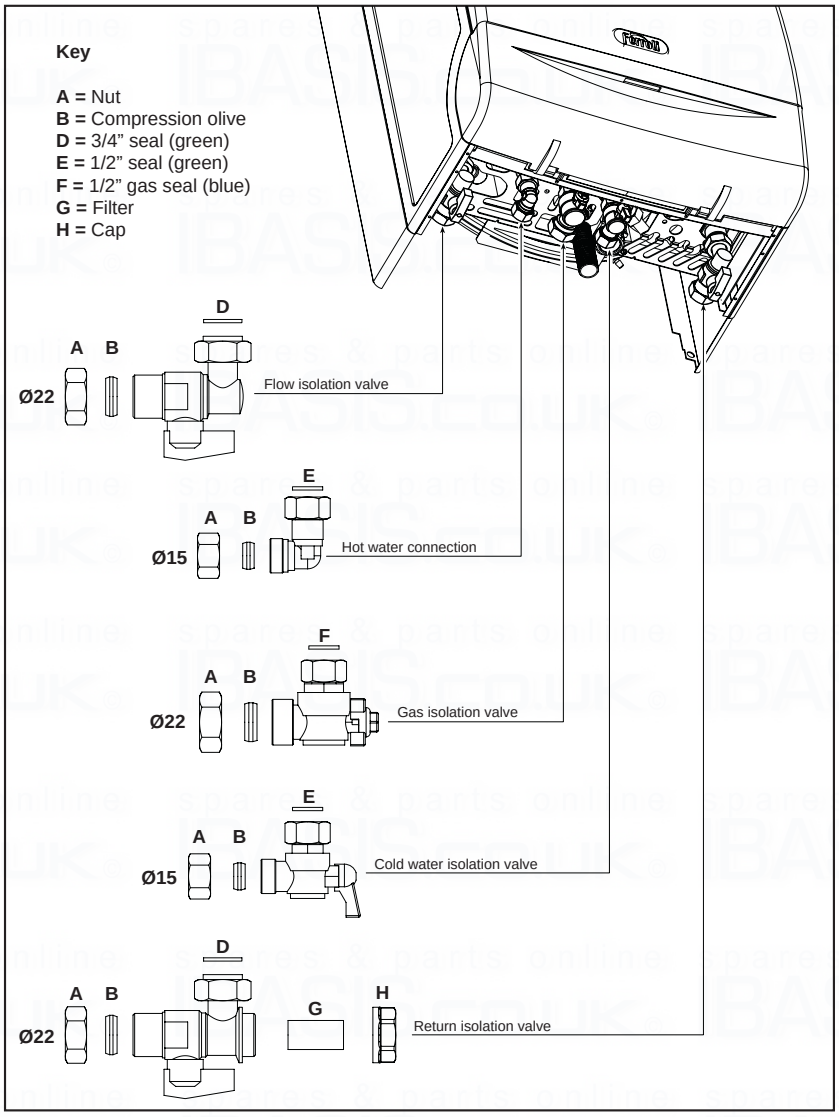

fig. 7

Water treatment

When treatment is used ferroli limited only recommend the use of proprietary Brand, such as Fernox or Sentinel water treatment products, which must be used in accordance with the manufactures instructions. for further information contact:

Feronx Manufacturing Co. LTD. Tandern house, Marlowe Way Croydon, surrey, CRO 4YS Tel: 0870 5601 5000	Sentinel Division Betz Dearborn LTD Widnes, Cheshire WA8 8ND Tel: 0151 424 5351

Note - When the boiler is installed with an existing or new system any unsuitable additives or system debris must be removed by thorough cleansing. All systems should be cleansed according to B.S. 7593.

Note - In hard water areas treatment to prevent lime scale may be necessary.

Note - It is important that the correct concentration of the water treatment product is maintained in accordance with the manufacturers instructions.

2.4 Connection to the gas system

If necessary the local Gas supplier should be consulted, at the installation planning stage, in order to establish the availability of an adequate supply of gas.

An existing service pipe must **not** be used whitout prior consultation with the local Gas supplier.

A gas meter can only be connected by the Local Gas supplier, or by a Local Gas suppliers Contractor.

Installation pipes should be fitted in accordance with BS6891.

Appliance inlet working pressure must be 20 mbar MINIMUM, for NG and 37 mbar minimum for propane.

Do not use pipes of a smaller size than the combination boiler inlet gas isolation valve (22 mm).

The complete installation must be tested for gas soundness and purged as described in BS6891. All pipework must be adquately supported. An isolating gas valve is provided and should be fitted on the boiler gas inlet. Please wait 10 minutes when ligthing from cold before checking the gas rate. Gas pressures should be checked after the boiler has operated for 10 minutes to ensure thermal equilibrium.

The appliance has no facility to check burner pressures, a combuston test should be carried out instead, see page 29 (combuston analyser testing).

The connecting kits shown in fig. 7 are supplied as standard.

2.5 Electrical Connections

The unit must be installed in conformity with current national and local regulations.

Connection to the electrical grid

The boiler must be connected to a single-phase, 230 Volt-50 Hz electric line.

The unit's electrical safety is only guaranteed when correctly connected to an efficient earthing system executed according to current safety standards. Have the efficiency and suitability of the earthing system checked by professionally qualified personnel. The manufacturer is not responsible for any damage caused by failure to earth the system. Also make sure that the electrical system is adequate for the maximum power absorbed by the unit, as specified on the boiler dataplate, in particular ensuring that the section of the system's cables is suitable for the power absorbed by the unit.

The boiler is prewired and provided with a cable for connection to the electricity line. The connections to the supply must be made with a permanent connection and equipped with a double pole switch whose contacts have a minimum opening of at least 3 mm, and fused at max. 3A between the boiler and the line. It is important to respect the polarities (LIVE: brown wire / NEUTRAL: blue wire / EARTH: yellow-green wire) in making connections to the electrical supply.

The user must never change the unit's power cable. If the cable gets damaged, switch off the unit and have it changed solely by professionally qualified personnel. If changing the electric power cable, use solely **"HAR H05 VV-F"** 3x0.75 mm^2 cable with a maximum outside diameter of 8 mm.

Access to the electrical terminal board

Follow the instructions **A** given in fig. 8a to access the electrical connection terminal board (**B** fig. 8b). The layout of the terminals for the various connections is given in the wiring diagram in the Technical Data chapter.

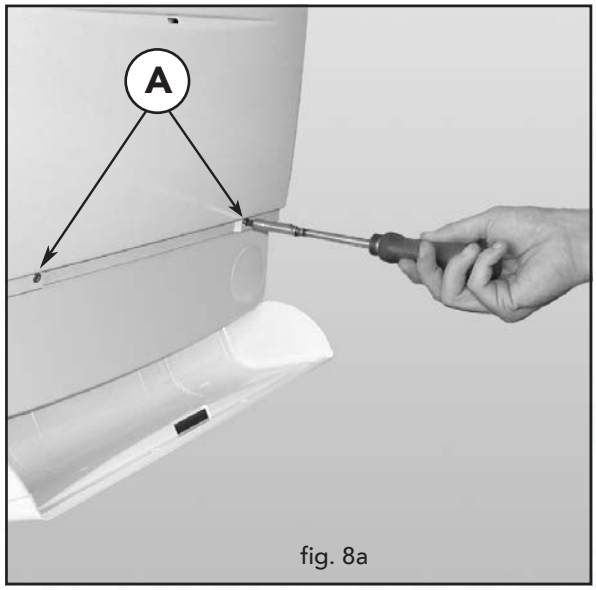

fig. 8a

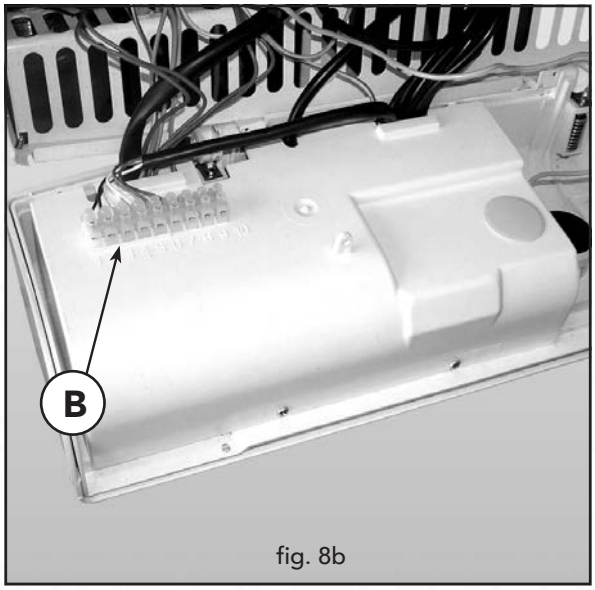

fig. 8b

Room thermostat

CAUTION: THE ROOM THERMOSTAT MUST HAVE VOLTAGE FREE CONTACTS. CONNECTING 230 V. TO THE TERMINALS OF THE TIME CLOCK AND ROOM THERMOSTAT WILL IRREPARABLY DAMAGE THE P.C.B.

When connecting a room thermostat with a daily or weekly program, or a timer switch, do not take the power supply for these devices from their cut-out contacts. Their power supply must be taken with a direct connection to the mains or with batteries, depending on the type of device (isolation to mains fed clocks via a 3amp fused spur).

2.6 Flue system

The unit is "type C" with a **sealed chamber** and forced draught, the air inlet and flue outlet must be connected to one of the following flue systems. With the aid of the tables and methods of calculation indicated, before commencing installation, it is first necessary to check that the flue system does not exceed the maximum permissible length. The current standards and local regulations must be observed.

It should be notes that only Ferroli flue system and accessories should be used on this appliance, as per BS 5440 2000 and C.E. test certification.

Restrictor

For boiler operation, the restrictor supplied with the unit must be mounted following the instructions below.

Determine the correct size of flue restrictor required. Before inserting the flue gas duct in the boiler, check that the restrictor fitted is correct and that it is correctly positioned (see fig. 9).

N.B.: the diameter of the hole is stamped on the restrictor

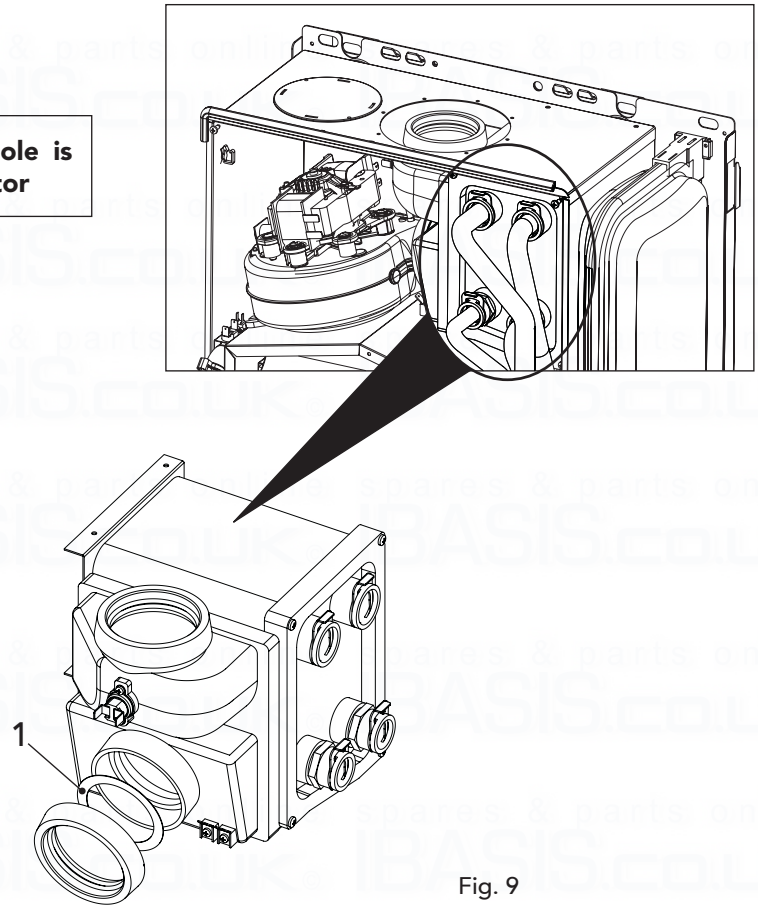

Fig. 9

Choice of restrictor:

- With 2 pipe system:
  - Calculate the total flow resistance of the air and flue pipes in metres (cap. 3.04.2)
  - utilise the table shown below to choose the more suitable restrictor for the flow resistance calculated

RESTRICTOR FOR TWO PIPE SYSTEM		
Total flow resistance of flue system		Use restrictor size
minimum	maximum	mm
0 m	20 m	43
20 m	55 m	No restrictor

- With concentric systems:
  - Choose correct restrictor from table below.

RESTRICTOR FOR CONCENTRIC SYSTEM		
Flue lenght up to:		Use restrictor size
Concentric 60 / 100	1 bend + 1 meter	43 mm
	1 bend + 3 meters	No restrictor
Concentric 80 / 125	1 bend + 5 meters	43 mm
	1 bend + 12 meters	No restrictor

Connection with concentric flue system

The unit can be connected to a concentric air/flue duct with a wall or rooftop outlet as shown on the following drawings. Numerous accessories are available on request to meet the various installation requirements. Please refer to our "flue manual" or the price list.

Horizontal concentric flue installation

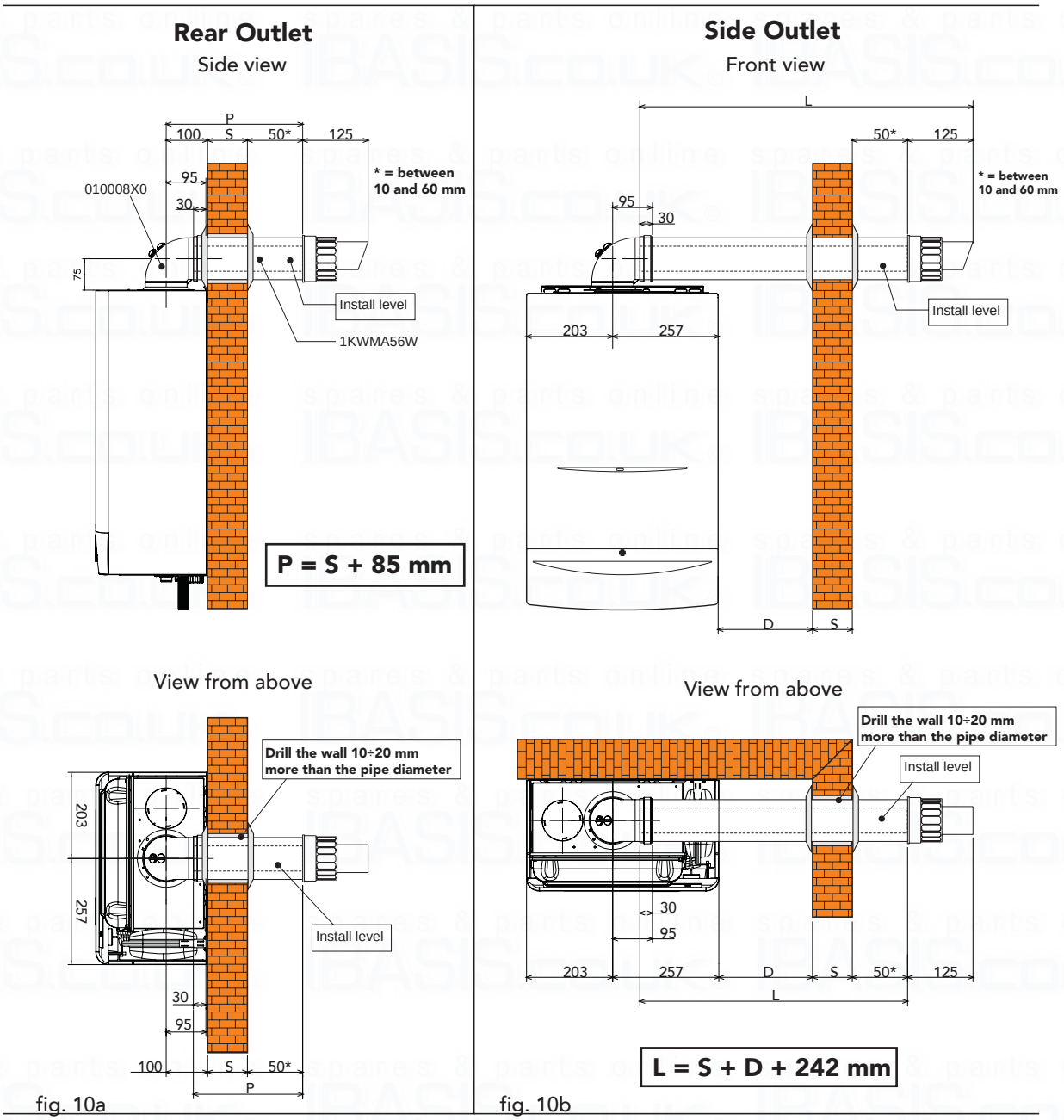

fig. 10a fig. 10b

Horizontal flue installation

1. Define the position for installing the unit.
2. If using (1KWMA56W) this must be installed level, for non-standard flue lenghts over im a fall of 3 mm per metre should be incorporated.
3. Make a hole of diameter 10 - 20 mm greater than the nominal diameter of the concentric pipe used.
4. If necessary, cut the end pipe to size, ensuring that the external pipe protrudes from the wall by between 10 and 60 mm (Fig. 10a and 10b). Remove the cutting burrs.

5. Connect the flue to the boiler, positioning the seals correctly. Seal the flue into the wall with silicone or sand + cement and cover with wall seals provided.

☞ Flue seals should be lubricated with a silicone type grease to prevent damage (grease not supplied)

Vertical Outlet

The total length in equivalent metres of the concentric flue must not exceed the maximum lengths stated in the following table, note that each bend gives rise to the stated reduction. For example, a duct = 60/100 composed of 1 bend of 90° +1 horizontal metre + 2 bends of 45° + 1 horizontal metre has a total equivalent length of 4 metres.

Table 2a

	Ø mm 60/100	Ø mm 80/125
Maximum permissible duct length (Horizontal)	3 m	12 m
Maximum permissible duct length (vertical)	4 m	12 m

Table 2b

Reduction factors for bends	
Concentric bend at 90° - Ø 60/100 mm	1 m
Concentric bend at 45° - Ø 60/100 mm	0.5 m
Concentric bend at 90° - Ø 80/125 mm	0.5 m
Concentric bend at 45° - Ø 80/125 mm	0.25 m

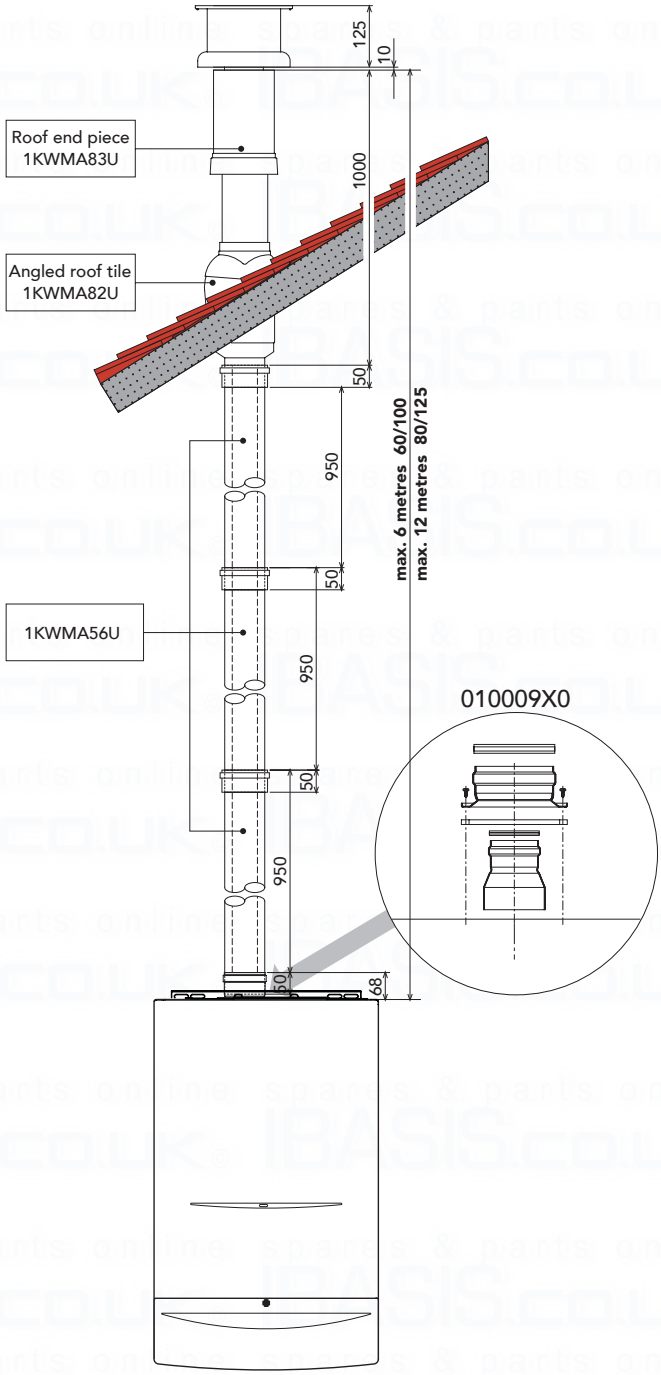

fig. 10c

Connection with 80 mm pipe system

The unit can be connected to a system of separate air/flue pipes for a wall or rooftop outlet as shown on the fig. 11 - 12. Numerous accessories are available on request to meet the various installation requirements.

Please refer to the flue manual catalogue or the price list for additional components.

To check you do not exceed the maximum permissible flue length, it is necessary to make a simple calculation before installation:

1. For each component, tables 4 - 5 provide an "equivalent loss in metres", depending on the position of installation of the component (with air intake or flue extraction, vertical or horizontal).

   The loss is called "equivalent length" since it is compared to the loss of one metre of flue (defined as equal to 1). For example, a bend at 90° of Ø80 in flue run has an equivalent loss of 2.5 linear metres, i.e. it has a loss equal to that of 2.5 metres of flue length.

2. After completely designing the layout of the system, add up the losses in equivalent metres, depending on the installation position, of all the components and accessories in the system.

3. Check that the total calculated loss is less than or equal to **55** equivalent **metres**, i.e. the maximum permissible for this model of boiler.

For complete flue options please contact FERROLI or check our comprensive flue manual.

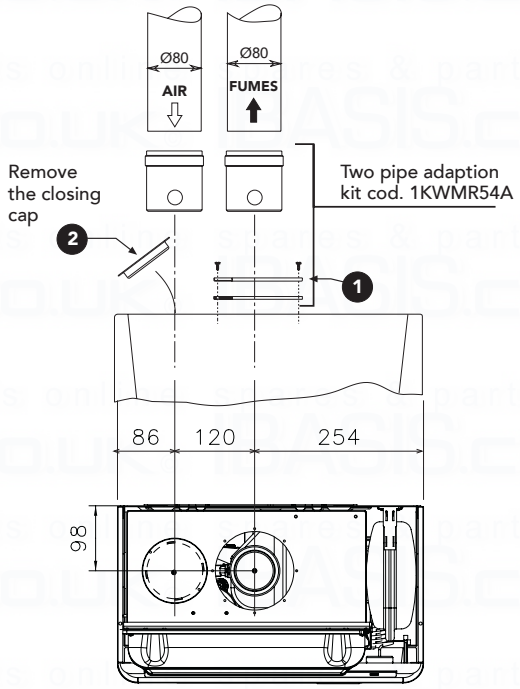

fig. 11

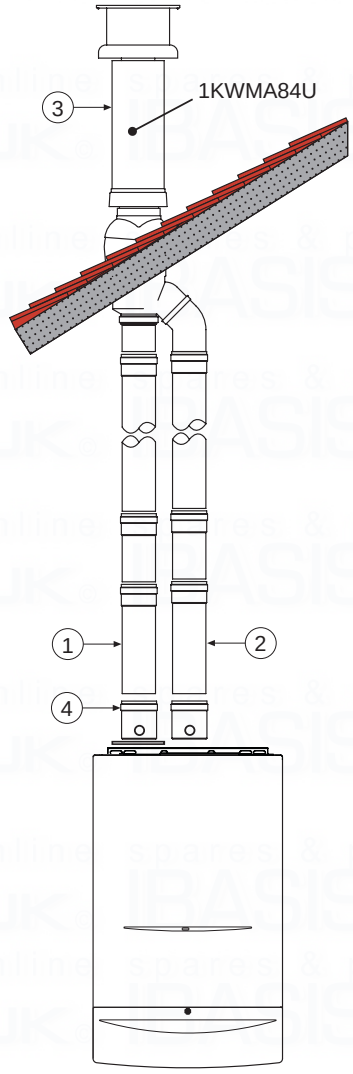

fig. 12

Table 3			
Ref.	**N° Pieces**	**Description**	**Equivalent loss**
1	**16**	Vertical flue pipe Ø80	25,6 m
2	**16**	Vertical air pipe Ø80	16,0 m
3	**1**	Vertical flue terminal	12,0 m
4	**1**	Two pipe adaption kit (1KWMR54A)	0,0 m
		Total	**53,6 m**

Table of flue and accessory

Table 4

Accessories Ø 80		Equivalent losses in metres (linear)			
		Air		Flue	
Description		Vertical	Horizontal	Vertical	Horizontal
Pipe Ø 80 male-female	KWMA83W • 1,00 m	1	1	1.6	2
Bend 45° Ø 80 mm male - female	KWMA65W	1.2		1.8	
Bend 90° Ø 80 mm male - female	KWMA01W	1.5		2.0	

Table 5

Accessories Ø 80		Equivalent losses in metres (linear)			
		Air		Flue	
Description		Vertical	Horizontal	Vertical	Horizontal
Horozontial flue terminal	KWMA86A				5
Horozontial air terminal	KWMA85A		2		
Vertical flue terminal	KWMA84U	12			

The stated loss values refer to genuine Ferroli flue accessories.

Terminal Position

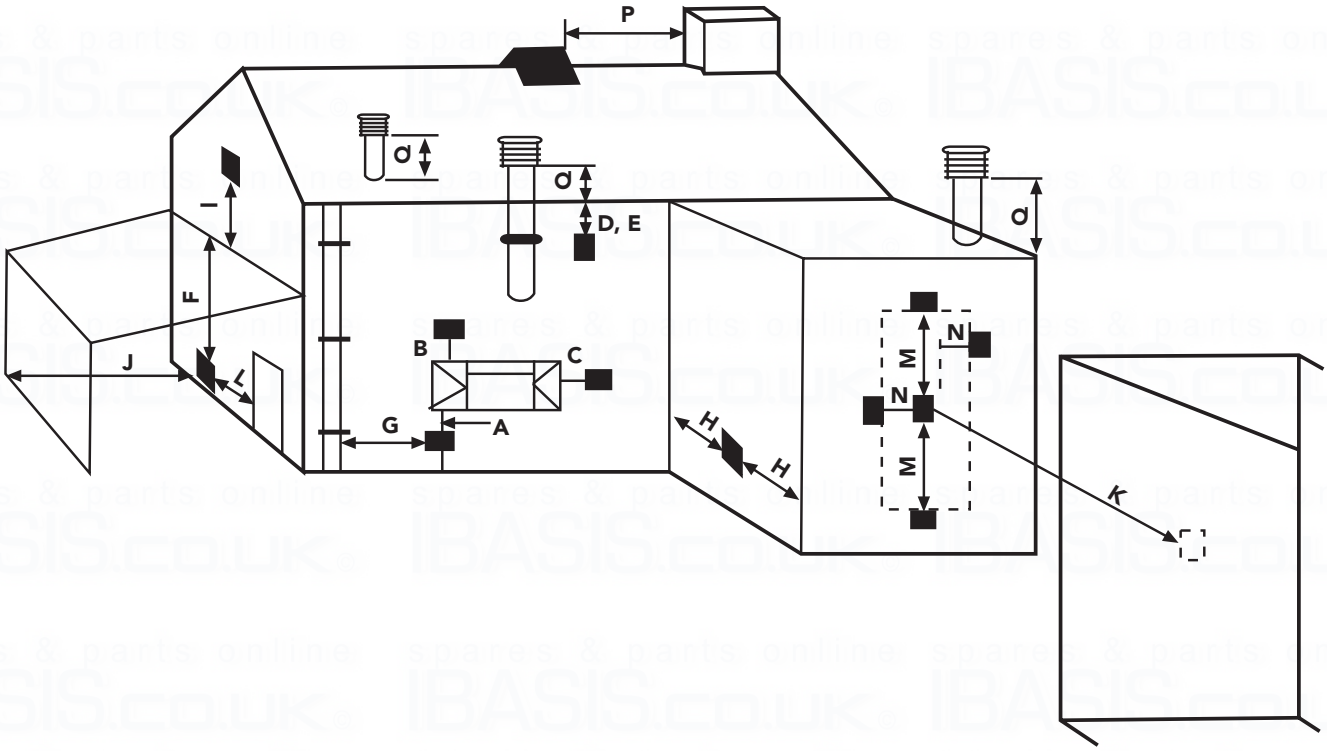

Minimum Dimensions of Flue Terminal Positions

A[a]	Directly below an opening, air brick, opening windows, etc.	300mm
B[a]	Above an opening, air brick, opening windows, etc.	300mm
C[a]	Horizontally to an opening, air brick, opening windows, etc.	300mm
D	Below gutters, soil pipes or drain pipes	75mm
E	Below eaves	200mm
F	Below balconies or car port roof	200mm
G	From a vertical drain pipe or soil pipe	150mm
H	From an internal or external corner	100mm
I	Above ground roof or balcony level	300mm
J	From a surface facing the terminal	600mm
K	From a terminal facing the terminal	1200mm
L	From an opening in the car port (e.g. door, window) into the dwelling	1200mm
M	Vertically from a terminal on the same wall	1500mm
N	Horizontally from a terminal on the same wall	300mm
O	From the wall on which the terminal is mounted	N/A
P	From a vertical structure on the roof	150mm
Q	Above intersection with roof	300mm

NOTE

N/A = Not applicable

In addition, the terminal should not be nearer than 150mm (fanned draugt) or 300mm (natural draugt) to an opening in the building fabric formed for the purpose of accommodating a built-in element such as a window frame. Separation distances are linked to the rated heat inputs as shown.

Condensing Terminal Positions: If the flue is to be terminated at low level, then the potential effect of the plume must be considered.

The plume should not be directed:
- across a frequently used access route
- towards a window or door
- across a neighbouring property

Connection to collective flues or single flues with natural draught

If you are then going to connect the **Ferroli F 24 B** boiler to a collective flue or a single flue with natural draught, the flue must be expressly designed by professionally qualified technical personnel in conformity with the standards and rules in force.

In particular, flues must have the following characteristics:

- Be sized according to the method of calculation stated in the standard
- Be airtight to the products of combustion, resistant to the fumes and heat and waterproof for the condensate
- Have a circular or square cross-section (some hydraulically equivalent sections are permissible), with a vertical progression and with no constrictions
- Have the ducts conveying the hot fumes adequately distanced or isolated from combustible materials
- Be connected to just one unit per floor, for at most 6 units in all (8 if there is a compensation duct or opening)
- Have no mechanical suction devices in the main ducts
- Be at a lower pressure, all along their length, under conditions of stationary operation
- Have at their base a collection chamber for solid materials or condensation of at least 0.5 m, equipped with a metal door with an airtight closure.

2.7 Condensate outlet connection

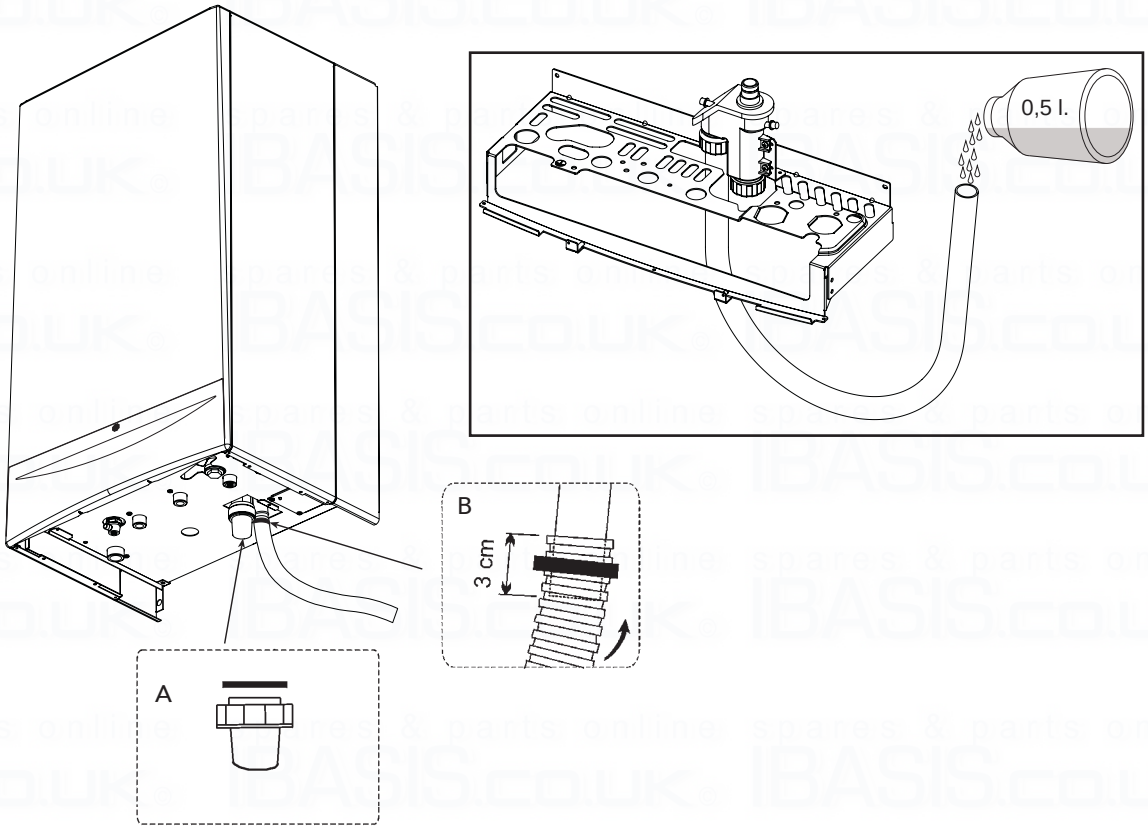

fig. 13

The boiler is equipped with an internal air-trap to drain off the condensate. Fit the inspection bowl **A** and the hose **B**, pushing it out for approximately 3 cm.

Fill the air-trap with approximately 0.5 l. of water and connect the hose to the waste system or soakaway.

Condensate discharge

Where possible the condensate should discharge into an internal soil pipe or waste system. The minimum pipe diameter required is 22 mm, a trap has already been fitted to the appliance with a flexible tail to facilitate the connection to the condensate discharge pipe.

The pipe should be a solvent weld plastic, not copper, as the condensate has a ph value of 4 (slightly acidic).

Where it is not possible to terminate internally, the condensate discharge pipe may be run outside (see below drawing).

Any external run is subjet to freezing, in severe weather conditions. To avoid this the pipework should be installed to dispose of the condensate quickly, with as much as possible run internally, before passing through the wall.

Pipework external to the building should be increased in diameter to 32 or 40 mm solvent weld. It should be run to a external drain or soakaway, with a maximum lenth of 3 metres.

If a soakaway (condensate absorption point) is used, it should be constructs as shown below.

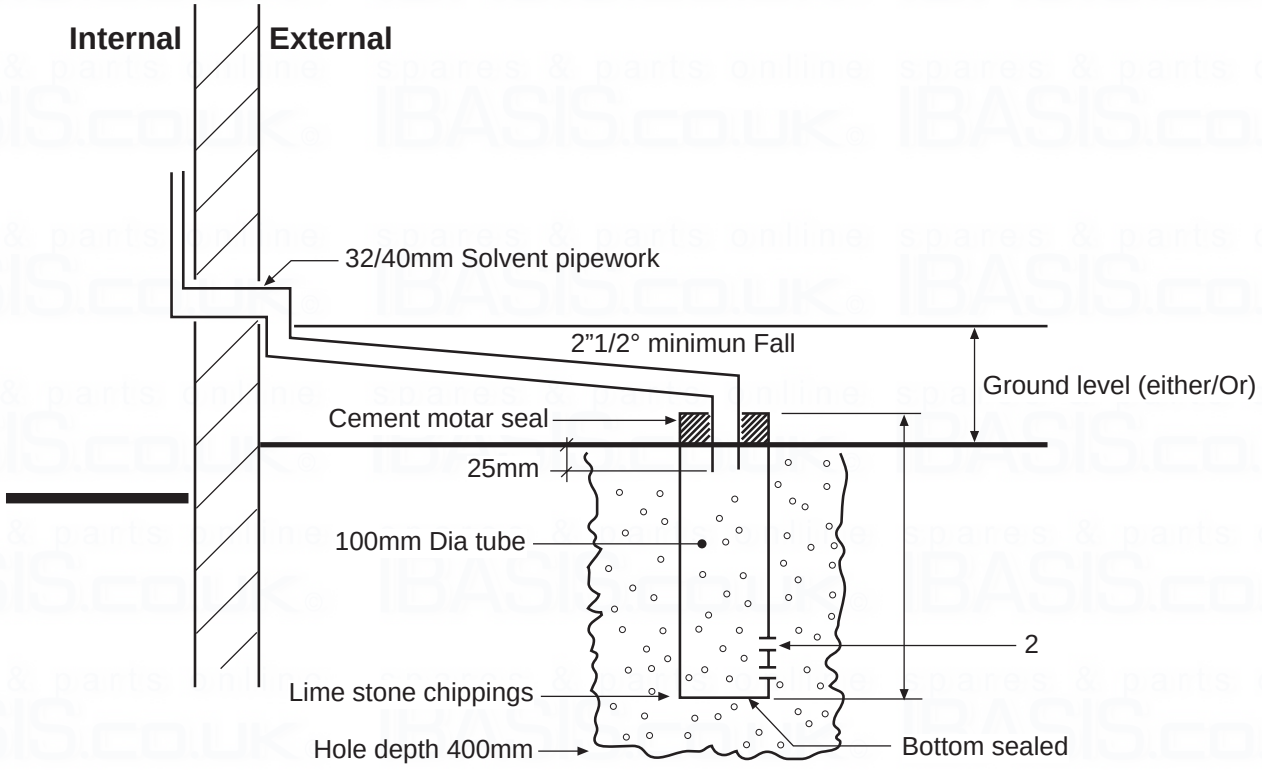

fig. 14

3. SERVICE AND MAINTENANCE

3.1 Adjustments

All adjustment and conversion operations must be carried out by Qualified Personnel such as the Ferroli Technical Service.

FERROLI declines any responsibility for damage or physical injury caused by unqualified and unauthorized persons tampering with the device.

Adjusting the pressure and flow rate to the main burner

This boiler operates on the flame modulation principle. It has two fixed pressure values, minimum and maximum, which must be as shown in the table 10, whichever type of gas is used.

Note - Because correct minimum and maximum pressures are critical to the efficient operation of the boiler it is ESSENTIAL that the following adjustments are carried out by COMPETENT personnel ONLY.

Adjusting minimum and maximum pressure Honeywell V K4105G gas valve

- Connect suitable pressure gauge to burner test point "B" downstream of the gas valve.
- Disconnect the pressure compensation tube «F».
- Remove the protective cap «C».
- Adjust potentiometre P3 (on the main board) at minimum (clockwise).
- Operate boiler for central heating
- Adjust minimum pressure by rotating screw «D» clockwise toreduce pressure and anticlockwise to increase pressure.
- Adjust potentiometre P3 at maximum (anti-clockwise)
- Adjust max pressure by rotating screw «E», clockwise to increase pressure and anticlockwise to reduce pressure.
- Reconnect the pressure compensation tube «F».
- Replace protective cap «C».

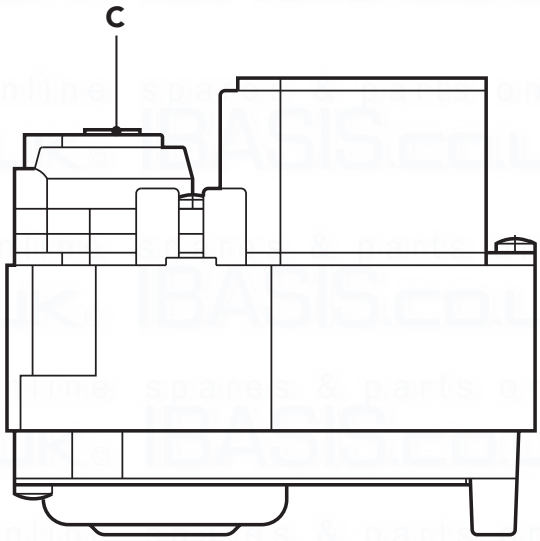

Key

A = Gas inlet test point
B = Gas outlet test point
C = Protection cup
D = Min. pressure adjusting screw
E = Max. pressure adjusting screw
F = Balancing tube

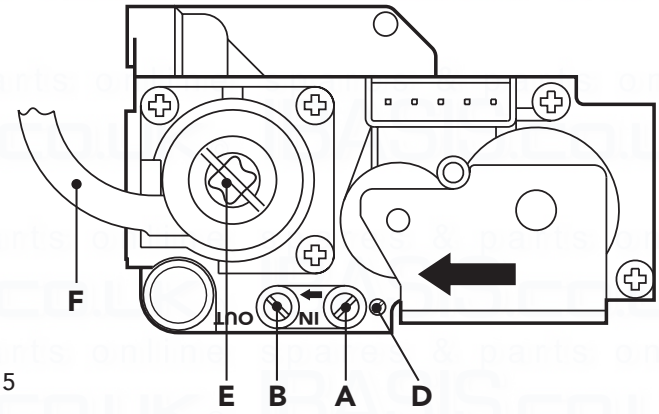

Fig. 15

Adjustment potentiometers

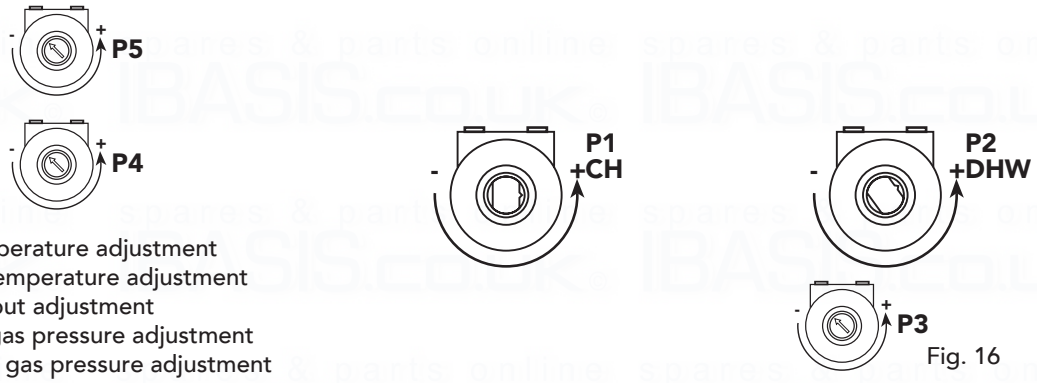

P1 = C.H. temperature adjustment
P2 = D.H.W. temperature adjustment
P3 = C.H. output adjustment
P4 = Ignition gas pressure adjustment
P5 = Minimum gas pressure adjustment

Fig. 16

Adjusting maximum output for central heating system (fig. 16)

This adjustment must be carried out electronically using the "P3" adjustment screw starting with a cold central heating system. Connect a pressure gauge to the pressure test point downstream of the gas valve. Rotate the temperature adjustment screw to maximum then regulate the pressure to the value required. Once this operation is complete, start up and shut down the burner two or three times using the thermostat. Check each time that the pressure values remain as adjusted and that the burner ignites correctly. Otherwise further adjustment is necessary until the pressure remains stable on this value.

N.B. - when carrying out this operation ensure that the boiler thermostat is set to maximum otherwise the adjustment will not be accurate.

Adjusting central heating flow temperature

Central heating water temperature is adjusted by rotating the control knob (B - fig. 1). Rotate the knob clockwise to increase water temperature, anticlockwise to reduce water temperature. Temperature can be varied from a minimum of 30°C to a maximum of 85°C. However, we recommend not operating the boiler below 50°C.

Adjusting room temperature (when a room thermostat is fitted)

Room temperature is controlled by positioning the room thermostat knob to the required value. The thermostat automatically controls the boiler, temporarily interrupting the electrical supply subject to the room heat requirements.

Adjusting the central heating flow t by varying pump flow-head

The thermal head t (the difference in temperature between the delivery water and return water in the central heating circuit) must be less than 20° C. This is obtained by varying pump flow rate and head using the multi-speed variator (or switch) on the pump itself. Increasing the pump speed reduces t and vice versa. The minimum differential must not be less than 11°C.

Adjusting central heating system pressure

The pressure of water in the central heating system, read on the control panel pressure gauge, is adjusted as described in paragraph 3.08 page 24.

N.B. - To avoid incurring unnecessary expense, in the event of boiler shut down, check that this is not caused by a lack of electricity or gas, or low water pressure before calling the Customer Technical Service Helpline.

Gas conversion

The following adjustment and conversion operations must be carried out by competent personnel. FERROLI Limited accepts no liability for damage to property or personal injury resulting from tampering with the boiler by unauthorised persons.

To convert the boiler from Nat Gas to LPG and vice versa, the main burner injectors must be replaced. There's also an electronic setting: Jumper JP02 has to be set from NAT to LPG position.

Then, Minimum and maximum pressures must then be adjusted on the gas valve (table 10).

Note: After converting the boiler from natural gas to liquid gas, fit the orange plate in the conversion kit near the data plate.

Note: Injector diameters and pressures at the main burner are given in Technical Data.

3.2 Initial start-up

Commissioning must be performed by Qualified Personnel.
Checks to be made at initial start up, and after all maintenance operations that involved disconnecting from the system or an intervention of a safety device.

Checks to be carried out before starting up for the first time

When starting the boiler up for the first time check:

- that the isolation valves between the boiler and central heating systems are open;
- that the central heating system is filled and vented;
- that there are no gas or water leaks from the central heating system or boiler;
- that the electric connections are correct and the earth wire of the boiler is connected to an efficient earthing installation and a 3amp. fuse is fitted to the isolator;
- that there are no flammable liquids or materials near the boiler.

Starting up the boiler

- Open the gas cock upstream of the boiler.
- Vent air present in the pipe upstream of the gas valve.
- Turn on electrical supply to the boiler.
- Rotate the ON-OFF RESET switch **A** (fig. 1) into the ON position.
- Check inlet working gas pressure, burner pressures and gas rate.

At this point, choose whether the boiler is to be used for central heating and domestic hot water production or for domestic hot water production only. If the former is chosen (central heating and domestic hot water production), turn the knob **B** (fig. 1) to the "Winter" position. Set the knob above 50°C and set the room thermostat (if fitted) to maximum. The burner ignites and the boiler starts to function automatically, controlled by its control and safety devices.

If the latter is chosen (domestic hot water production only), position the knob **B** (fig. 1) on the "Summer" position. In this mode the boiler is ready to operate automatically whenever domestic hot water is drawn off.

Note - If after completing the start-up procedure correctly, the burners fail to ignite and the boiler shut down warning lights up, wait about 15 seconds then rotate the knob **A** (fig. 1) against spring pressure to the RESET position and release it. The reset electronic control unit will repeat the start-up cycle.

Note - In central heating mode after resetting the boiler will go into it 2 minue delay before starting up again. If after a second attempt the burners still fail to ignite, consult the paragraph "Troubleshooting".

Note - If there is a power failure while the boiler is in operation, the burners automatically go out and re-ignite when the power returns.

Shutting down

Close the boiler isolation gas cock and turn off the electricity to the boiler.

Important: If the boiler is not to be used for lengthy periods during the winter, to avoid frost damage, you are recommended to drain the water from the circuits (domestic hot water and central heating). Alternatively, drain the domestic hot water system only and add special anti-freeze to the central heating system.

Checks and controls after first start-up

- Check there are no leaks in the gas and water circuits.
- Check correct boiler start up by carrying out start up and shut down tests using the boiler stat.
- Check the integrity of the air-flue pipes during boiler operation.
- Check that the gas consumption indicated on the meter corresponds to that given in Technical Data.
- Check that water is circulating correctly. Balance the radiators to ensure that the flow and return differential does not exceed 20°C.
- Check that when operating in the "Winter" mode, the pump stops and domestic hot water is produced correctly when the hot water tap is turned on.
- Check that in the "Summer" mode, the burner lights up and shuts down correctly when the domestic hot water tap is turned on and off.
- Check that the domestic hot water flow and T correspond to the table. Do not rely on empirical measurements. Temperature should be measured using thermometers as near as possible to the boiler, bearing in mind the heat loss from the pipes.
- Check that the gas valve modulates correctly both during the central heating phase and the domestic hot water production phase.
- Determine the combustion efficiency and the composition of the flue gases.
- If any of the above are not correct refer to Technical Data. Adjustment and Fault finding.

3.3 Maintenance

The following operations are strictly reserved for Qualified Personnel, such as corgi registered engineers or Ferroli personeer.

Annual Servicing

The following should be checked at least once a year:

- Water pressure in the central heating system when cold should be about 1 bar. If this is not the case, bring it back to this value.
- Check control and safety devices (gas valve, flow meter, thermostats, etc) are functioning correctly.
- The burner and heat exchanger must be clean. To avoid damage, always clean them with a soft brush or compressed air. Never use chemical products.
- The expansion vessel must be checked (precharge 1 bar).
- Check there are no leaks in the gas and water circuits.
- Check the air-flue gas duct terminal is free from obstructions and sound.
- The electrodes must be free from corrosion build up and correctly positioned.
- Gas flow and pressure must correspond to the values given in the Technical Data.
- The pump must be free to rotate.
- The condensate discharge must be clean free of obstructions and leaks.

Cleaning the boiler and burner

The boiler should be serviced annually. The heat exchanger and burner must never be cleaned with chemical products or steel brushes. Particular attention must be paid to all seals and fixings associated with the room-sealed compartment (gaskets, grommets, etc). Air leakage would cause pressure inside the compartment to drop, possibly tripping the differential pressure switch and thus shutting down the boiler. After cleaning particular attention should also be paid to checking stages of start-up and opera-

tion of the thermostats, gas valve and pump.

Servicing procedure

1. Visually check boiler for correct intallation and flueing.
2. Isolate electricity supply + check fuse is 3amp.
3. Remove case by undoing the two screws located at the bottom rear corners, lift slightly and pull forward.
4. Carry out preliminary electrical checks at boiler junction box. This is located in the centre of the boiler at the bottom and can be accessed be the removal of a single screw. Any faults found must be rectified before proceeding.
5. If electrical checks prove O.K. replace cover and secure with screw.
6. Attach a manometer to the boiler gas inlet test point, turn on electricty and fire boiler for hot water, check inlet pressure. This should be 20mbar minimum for NG and 37mbar for LPG. If this is not the case there is a supply problem and this will need to be remedied.
7. If inlet pressure is O.K. shut down boiler and remove manometer from gas inlet pressure test point and attach it to the boiler burner pressure test point. Reseal inlet pressure test point.
8. Fire boiler for hot water and check that the maximum pressure is 11.8mbar for NG and 36.0mbar for LPG. Turn off tap. Turn P3 on the main circuit board to minimum and fire the boiler for heating, check that the burner pressure reads 2.5 mbar for NG and 7.8mbar for LPG. Turn P3 back to max position. Shut down boiler, remove manometer, seal test point. If the pressures are not as specified they will need to be adjusted on the gas valve.
10. Take off the combustion chamber cover by removing the three securing screws.
11. Lift off flue hood and flue baffle plate.
12. Pull off the ignition and flame rectification leads from their respective electrodes.
13. Undo the gas union in the centre of burner rail and take out the two securing screws. Remove the burner rail and clean rail and injectors.
14. Remove two screws securing the burner assembly and remove the assembly. Clean burners.
15. Clean heat exchanger with a soft brush.
16. Re-assemble baffle, flue hood and fan assembly, secure with screws previously removed.
17. Refit burner assembly and burner rail.
18. Reconnect ignition and flame rectification leads.
19. Reconnect gas union and tighten.
20. Refit combustion chamber cover, secure with screws.
21. Examine seals on room sealed cover refit cover and secure with screws.
22. Turn on gas and electricity.
23. Fire boiler and check all gas joints for soundess.
24. Check flame picture and all controls for correct operation.
25. Check room sealed cover for leakage.
26. Check domestic water flow rate and temperature is within specifications.
27. Check operation of all safety cut off devices.
28. If a combustion analyser is to be used there are test points provided on the front of the room sealed cover. The right hand grommet is for air and the left hand one is for flue gas. The boiler must reach operating temperature before this test is carried out (normally 10-15 minutes). CO/CO2 ratio should not exceed 0.0080. Immediately after servicing (0.0040 at any other time)
29. Refit case and secure with screws.
30. Leave boiler set to customers requirements.

Cleaning the boiler and burner

The body and burner must not be cleaned with chemical products or wire brushes. Special care must be taken over all the sealing systems pertaining to the sealed chamber (gaskets, cable clamps, etc.). In addition, it is necessary to pay attention after performing all these operations to check and carry out all the phases of ignition and thermostat operation, the gas valve and circulation pump.

⚠ After these checks, make sure there are no gas leaks.

Combustion analyser testing

It is possible to analyse the combustion through the air and flue sampling points shown in fig. 17.

To make the measurement, it is necessary to:

1) Open the flue sampling point
2) Insert the probe;
3) Turn on the hot water tap;
4) Turn the domestic hot water stat to maximum;
5) Allow the boiler to reach thermal equilibrium (10 - 15 min.);
6) Wait 10 minutes for the boiler to stabilize
7) Take the measurement.

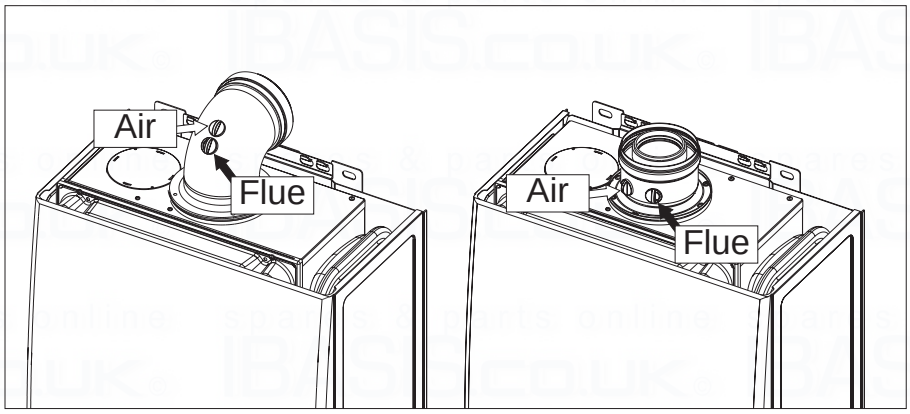

fig. 17

3.4 Troubleshooting

Before beginning any fault finding ensure that gas, water and electricity are available.

WARNING: DO NOT link any terminals on block X10 or X11 as this will damage the PCB beyond repair.

Operating Sequence

With the power established the boiler is in its stand-by mode i. e. power on but no demand. The operational sequence for C.H. and D.H.W. are as follows:

Central Heating Mode

External Call for Heat: The temperature regulator, built in or remote clock and room thermostat, if fitted, must all call for heat. This will cause the pump to run.

Internal Call for Heat: Low water pressure switch is calling for heat. If both external and internal calls for heat are present the MF03 PCB will energise.

In demand the fan will go to high speed causing the air pressure switch to operate. If the overheat (100°C) stat and the flue gas safety thermostat (100°) are closed circuit the ignition will operate and the gas valve will be energised.

The burner will light at ignition burner pressure, automatically range rating itself up to the heating load, then modulating down when the boiler reaches the desired flow temperature. When the central heating is satisfied the burner will go off and the fan stops i.e. stand-by mode.

Note - If the boiler thermostat is set to maximum than the burner pressure will go to maximum effectively bypassing the auto range rating facility

Domestic Hot Water Mode

External Call for D.H.W: Flow meter registers at least 2.5 litres/min flow to the hot water taps.

Internal Call for D.H.W: Low water pressure switch calling for heat.

If both internal and external calls are present the boiler follows the same sequence as for C.H. to light the burner. However, for D.H.W. the burner will go straight to maximum and then modulate once the water reaches the set temperature of the control thermostat. Turning the tap off will return the boiler to stand-by mode.

Note: Following shut down of the D.H.W. or C.H. the boiler will go into a three minute central heating delay.

Limit thermostats

T/Stat	Location	Function	Nominal Operating Temperature	Circuit	Wiring Colours
Flue gas safety thermostat	Secondary heater Exchanger	Protect boiler by stopping ignition and cuts power to gas valve	100°C	240V AC	Grey Grey
Frost	Incorporated in C.H. Sensor	Fires the boiler and runs pump to maintain minimum water temperature	7°C - 14°C	Low voltage DC	Red Red
Overheat	Top LHS of Heat Exchanger	Protect boiler by stopping ignition and cuts power to gas valve	100°C	240V AC	Grey Grey

The MFO3 PCB has fivediagnostic lights, each light corresponds to a particular function and will light in turn as the boiler goes though its sequence of operations.

In order, the five lights indicate:

1 Boiler On Indicate
2 Boiler Shut down warning
3 Domestic Hot Water circuit ON
4 Central Heating standby (Flashing Light)
Central Heating circuit ON (Permanent Light)
5 Insufficient pressure in Central Heating System (Flashing Light)
Electric power supply ON (Permanent Light)

Note: Always check for sufficient gas supply (20mbar inlet working pressure for NG and 37mbar for LPG). Minimum of 22 mm diameter pipework on C.H. flow and return with adequate by-pass. A correctly installed flue system and a 3 amp fuse.

MF03.1 PCB

When operating the C.H. the following lights should be on: 4, 5 and flame on light. For D.H.W. the following lights should be on: 3, 5 and flame on light.

If the boiler works for C.H. but not D.H.W., or vice versa, a number of components must be functioning and can, therefore, be eliminated as being at fault.

Boiler will not light for D.H.W.

If boiler works for C.H. but not for D.H.W. the fault is most likely to be the flow meter or D.H.W. sensor.

If the tap symbol light is on the fault is the D.H.W. sensor. If this light is not on then suspect the flow meter has not operated.

Boiler will not light for C.H.

If the boiler works for D.H.W. but not for heating the fault is most likely to be external controls (i.e. clocks or room thermostats). Integral clock if fitted or C.H. sensor.

If the heating demand light is on the fault is most likely the C.H. sensor. If this light is not on suspect either a clock or room thermostat not calling.

To override/eliminate any external controls disconnect them from terminal 3 and 4 underneath the boiler and refit the link wire (see fig. 22).

Boiler will not light for D.H.W. or C.H.

The fault is likely to be a component common to both services. Open a hot tap to create a demand - is there a spark at the ignition electrode?

Yes Suspect gas supply, pressure or gas valve.
No Is fan running?
Yes Suspect air pressure switch or overheat stat (if boiler locks out without sparking go to overheat stat)
No Is low water pressure light Flashing?
Yes Top up water to above 1 bar. Does the light go out? (if water pressure o/k suspect high limit stat)
Yes Does fan start?
Yes Does boiler light?
Yes Is hot water OK?
Try heating, if heating does not work follow guide for heating faults. Does low water pressure light go out?
No Suspect low water pressure switch.

If boiler still does not fire see comprehensive fault finding chart.

Temperature sensors (thermistors)

Identical, but individual, negative temperature co-efficient (NTC) thermistors are fitted in the C.H. and D.H.W. outlets from the heat exchanger. As the water temperature increases the resistance in the thermistor decreases. This causes the PCB to reduce the voltage to the modureg, in turn reducing the burner pressure. The wiring for each thermistor is colour coded red for C.H. and blue for D.H.W. The sensors are fitted in wet pockets.

Main printed circuit board

Secured by flour plastic tabs the PCB is situated inside the control compartment. The transformer for low voltage AC is attached to the PCB as is the DC rectifier. Potentiometers control C.H. output and maximum D.H.W. temperature, both are adjustable by the controls on the facia and because the boiler features automatic range rating no adjustments need to be made. Electro mechanical relays control pump operation and put switched live to the ignition PCB (demand relay), they have transparent plastic covers so that their contacts can be seen moving.

Air pressure switch

Operating at 230 V AC and situated next to the fan. Different coloured tubes connect the switch to the fan. It is a make on pressure switch and only uses two terminals, the middle terminal is not used.

Short spares list

KEY NO. (from fig 19)	DESCRIPTION	PART NO.	G.C. NO.
14	Safety Valve C/W Manifold	805880	E39-485
16	Fan assembly	800480	E23-851
34	Central Heating Flow Temperature Sensor	800320	E23-839
42	Domestic Hot Water Flow Temperature Sensor	800320	E23-839
43	Air Pressure Switch	800150	E23-840
44	Gas Valve - VK4105G	808000	E23-768
49	Overheat Safety Thermostat 100°C	801240	386-815
81	Ignition Electrode	806258	E26-348
82	Flame Sensing Electrode	801438	E23-855
136	Flow Meter C/W Elbow	805910	E39-465
	Main PCB MF03.1	805900	E39-470
27	Heat Exchanger	807480	E77-470
126	Flue gas safety thermostat		

4 TECHNICAL CHARACTERISTICS AND DATA

4.1 Dimensions and connections

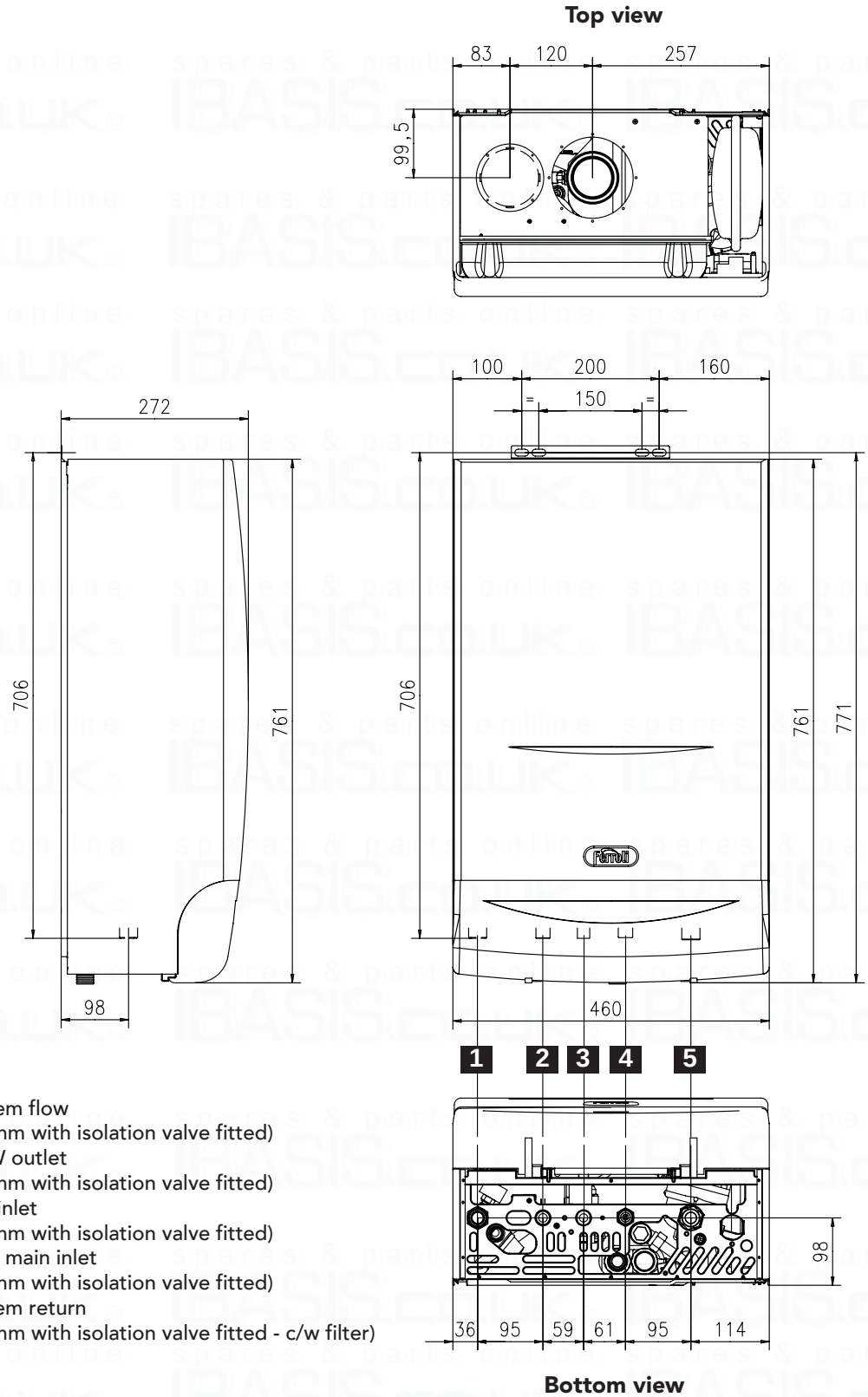

Key

1 System flow
(22 mm with isolation valve fitted)
2 DHW outlet
(15 mm with isolation valve fitted)
3 Gas inlet
(22 mm with isolation valve fitted)
4 Cold main inlet
(15 mm with isolation valve fitted)
5 System return
(22 mm with isolation valve fitted - c/w filter)

fig. 18

4.2 General view and main components

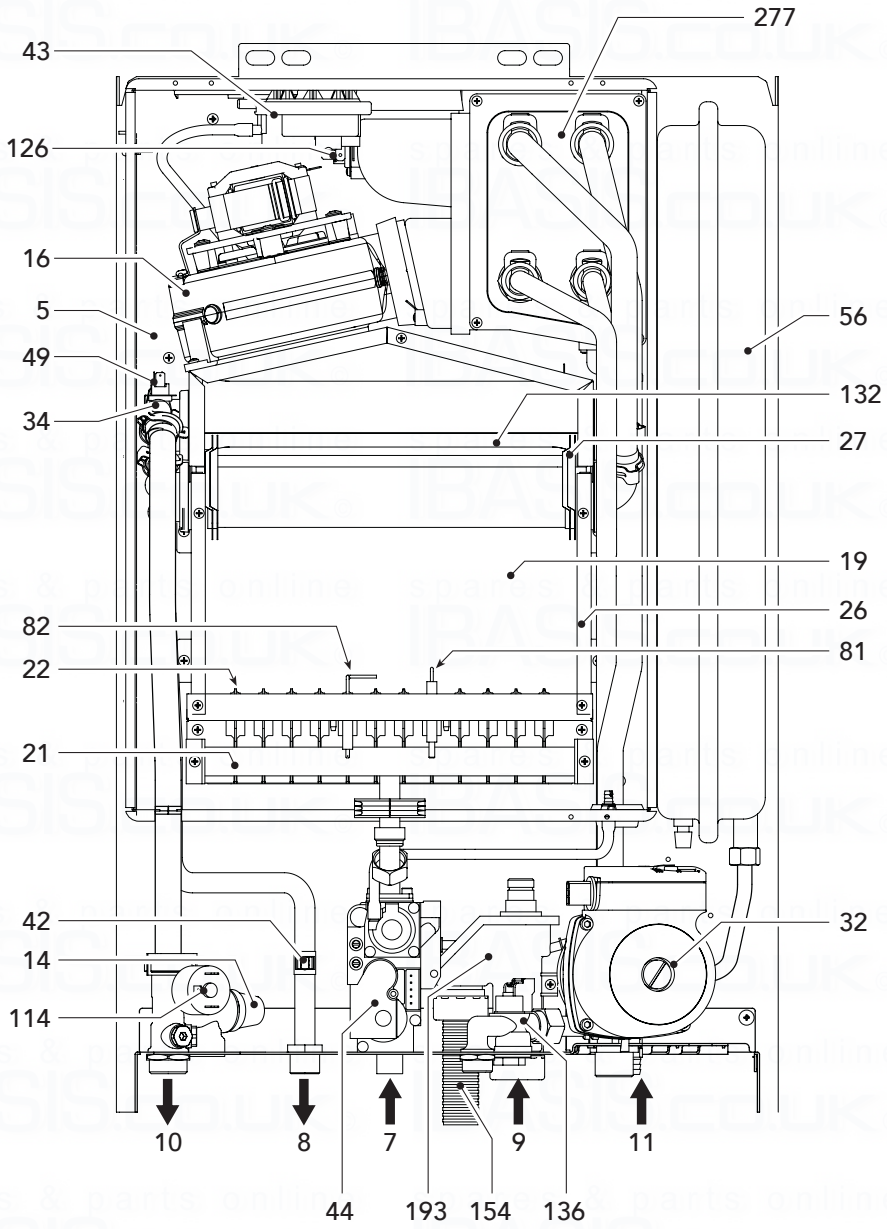

Key

5	Combustion chamber
7	Gas inlet
8	DHW outlet
9	Cold water inlet
10	CH flow
11	CH return
14	Safety valve
16	Fan
19	Combustion chamber
21	Gas injector
22	Ceramic burner
26	Combustion chamber insulation
27	Copper heat exchanger for c.h. + d.h.w.
32	Heating pump
34	Heating flow sensor
42	D.h.w. temperature sensor
43	Air pressure switch
44	Gas valve
49	Safety thermostat
56	Expansion vessel
81	Sparkelektrode
82	Ionisationelektrode
114	Water pressure switch
126	Flue gas safety thermostat
132	Flue gas deflector
136	Flow meter
154	Condense outlet
193	Siphon
277	Secondary heater exchanger

fig. 19

4.3 Hydraulic diagram

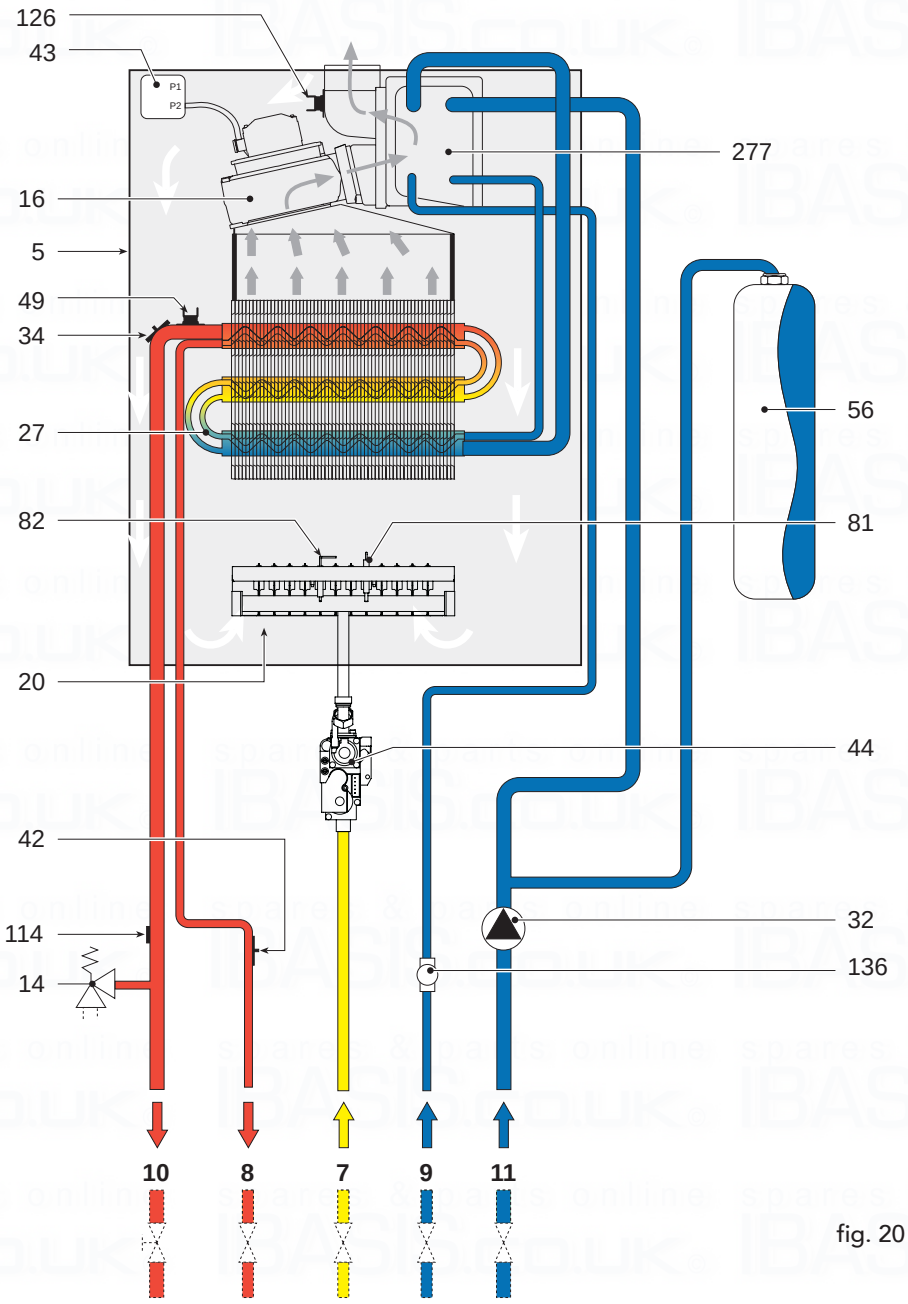

fig. 20

Key

5	Combustion chamber
7	Gas inlet
8	DHW outlet
9	Cold main inlet
10	CH flow
11	CH return
14	Heating safety valve
16	Fan
32	Heating pump
34	Flow temperature sensor
42	D.h.w. temperature sensor
43	Air pressure switch
44	Gas valve
49	Safety thermostat
56	Expansion vessel
81	Sparkelektrode
82	Ionisationelektrode
114	Water pressure switch
126	Flue gas safety thermostat
136	Flow meter
277	Secondary heater exchanger

4.4 Technical data table

Table 10

Powers		Pmax	Pmin
Hi Heating power	kW	25,0	10,8
Useful Heating Power 80° C - 60° C	kW	24,1	9,9
Useful Heating Power 50° C - 30° C	kW	25,5	10,3
Gas supply			
Natural Gas main nozzles (G20)	mm	12 x 1,30	
Natural Gas supply pressure (G20)	mbar	20,0	
Pressure at Natural Gas burner (G20)	mbar	11,8	2,5
Natural Gas delivery (G20)	nm^3/h	2,65	1,14
LPG main nozzles (G31)	mm	12 x 0,77	
LPG supply pressure (G31)	mbar	37,0	
Pressure at LPG burner (G31)	mbar	35,0	7,5
LPG delivery (G31)	kg/h	1,96	0,84
Heating			
Heating temperature adjustment range	°C	30 - 85	
Maximum working temperature in heating	°C	90	
Maximum working pressure in heating	bar	3	
Minimum working pressure in heating	bar	0.8	
Expansion vessel capacity	litres	8	
Expansion vessel pre-filling pressure	bar	1	
Total boiler water content	litres	2,0	
Hot water			
Hot tap water supply Δt 25° C	l/min	13,8	
Hot tap water supply Δt 30° C	l/min	11,5	
Hot tap water supply Δt 35° C	l/min	9,8	
Tap water temperature adjustment range	°C	40 - 55	
Maximum working pressure in hot water production	bar	9	
Minimum working pressure in hot water production	bar	0.25	
Dimensions, weights connections			
Height	mm	760	
Width	mm	460	
Depth	mm	272	
Weight with packing	kg	41	
Gas system connection	mm	1/2"	
Heating system connections	mm	3/4"	
Hot water circuit connections	mm	1/2"	
Maximum length of separate flues D=80* (*Measurement given in equivalent linear metres – cfr FERROLI calculation system)	m_{eq}	55	
Electrical power supply			
Max electrical power absorbed	W	135	
Protection level	IP	X4D	

4.5 Diagrams

Head available for the system

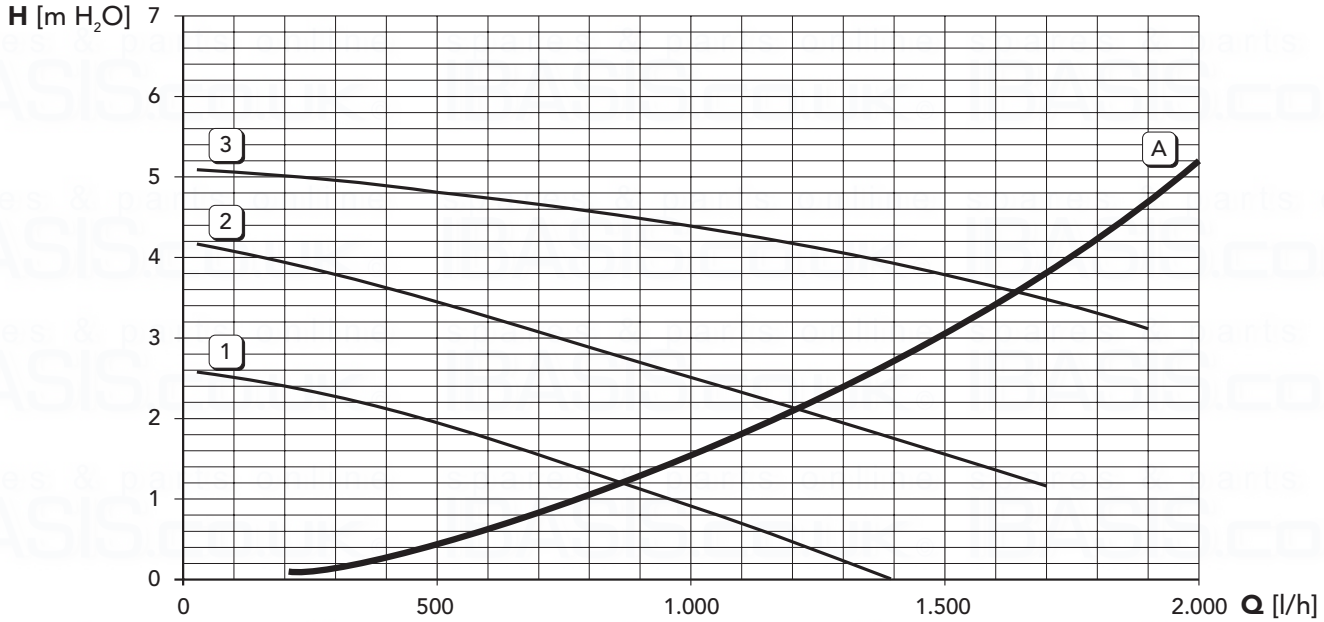

1 2 3 = Circulator speed

A = Boiler losses of head

Fig. 21

4.6 Wiring diagram

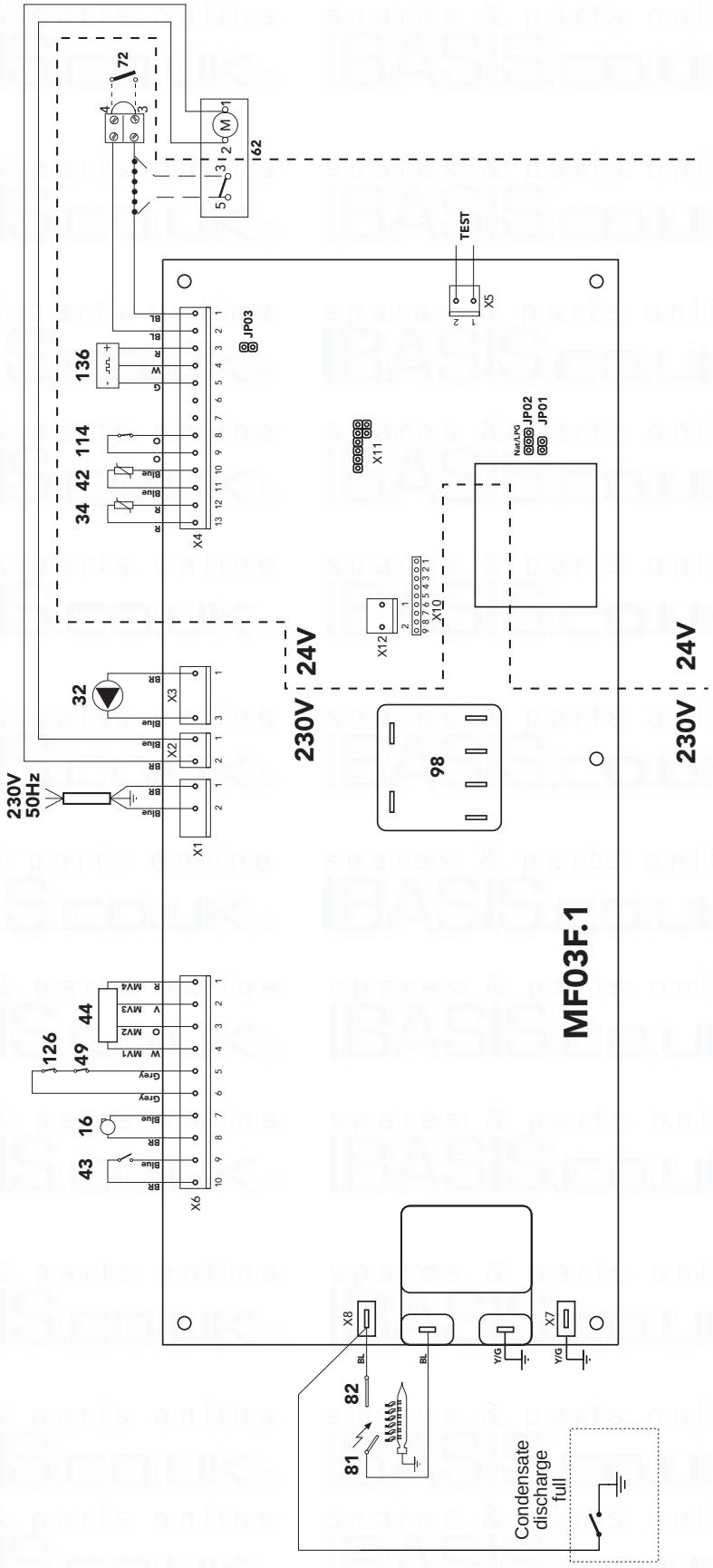

fig. 22

IMPORTANT

USE A ROOM THERMOSTAT (24 V) WITHOUT VOLTAGE TO THE CONTACTS. CONNECTING 230 V TO THE ROOM THERMOSTAT TERMINALS WILL IRREPARABLY DAMAGE THE ELECTRONIC BOARD.

Key

16	Fan
32	Central heating pump
34	Central heating flow temperature sensor
42	Domestic hot water flow temperature sensor
43	Air pressure switch
44	Gas valve
49	Safety thermostat
62	Time clock
72	Room thermostat
81	Ignition electrode
82	Sensor electrode
98	Off/On/Reset switch
114	Low water pressure switch
126	Flue gas safety thermostat
136	Flow meter

Key

BR	Brown
BLUE	Blue
BL	Black
W	White
O	Orange
G	Green
R	Red
V	Violet

spares & parts online IBASIS.CO.UK

BENCHMARK No. 2 6 7 _ _ _ _

Please add the first 4 digits of the Boiler serial No to complete the BENCHMARK No.

benchmark™ COLLECTIVE MARK

GAS BOILER COMMISSIONING CHECKLIST

BOILER SERIAL No. _____ **NOTIFICATION No.** _____

CONTROLS *To comply with the Building Regulations, each section must have a tick in one or other of the boxes*

TIME & TEMPERATURE CONTROL TO HEATING	ROOM T/STAT & PROGRAMMER/TIMER	☐	PROGRAMMABLE ROOMSTAT	☐
TIME & TEMPERATURE CONTROL TO HOT WATER	CYLINDER T/STAT & PROGRAMMER/TIMER	☐	COMBI BOILER	☐
HEATING ZONE VALVES	FITTED	☐	NOT REQUIRED	☐
HOT WATER ZONE VALVES	FITTED	☐	NOT REQUIRED	☐
THERMOSTATIC RADIATOR VALVES	FITTED	☐		
AUTOMATIC BYPASS TO SYSTEM	FITTED	☐	NOT REQUIRED	☐

FOR ALL BOILERS CONFIRM THE FOLLOWING

THE SYSTEM HAS BEEN FLUSHED IN ACCORDANCE WITH THE BOILER MANUFACTURER'S INSTRUCTIONS? ☐

THE SYSTEM CLEANER USED

THE INHIBITOR USED

FOR THE CENTRAL HEATING MODE, MEASURE & RECORD

GAS RATE		m^3/hr		ft^3/hr
BURNER OPERATING PRESSURE (IF APPLICABLE)	☐	N/A		mbar
CENTRAL HEATING FLOW TEMPERATURE				°C
CENTRAL HEATING RETURN TEMPERATURE				°C

FOR COMBINATION BOILERS ONLY

HAS A WATER SCALE REDUCER BEEN FITTED? YES ☐ NO ☐

WHAT TYPE OF SCALE REDUCER HAS BEEN FITTED?

FOR THE DOMESTIC HOT WATER MODE, MEASURE & RECORD

GAS RATE		m^3/hr		ft^3/hr
MAXIMUM BURNER OPERATING PRESSURE (IF APPLICABLE)	☐	N/A		mbar
COLD WATER INLET TEMPERATURE				°C
HOT WATER OUTLET TEMPERATURE				°C
WATER FLOW RATE				lts/min

FOR CONDENSING BOILERS ONLY CONFIRM THE FOLLOWING

THE CONDENSATE DRAIN HAS BEEN INSTALLED IN ACCORDANCE WITH THE MANUFACTURER'S INSTRUCTIONS? YES ☐

FOR ALL INSTALLATIONS CONFIRM THE FOLLOWING

THE HEATING AND HOT WATER SYSTEM COMPLIES WITH CURRENT BUILDING REGULATIONS ☐

THE APPLIANCE AND ASSOCIATED EQUIPMENT HAS BEEN INSTALLED AND COMMISSIONED IN ACCORDANCE WITH THE MANUFACTURER'S INSTRUCTIONS ☐

IF REQUIRED BY THE MANUFACTURER, HAVE YOU RECORDED A CO/CO_2 RATIO READING? N/A ☐ YES _____ CO/CO_2 RATIO

THE OPERATION OF THE APPLIANCE AND SYSTEM CONTROLS HAVE BEEN DEMONSTRATED TO THE CUSTOMER ☐

THE MANUFACTURER'S LITERATURE HAS BEEN LEFT WITH THE CUSTOMER ☐

COMMISSIONING ENG'S NAME PRINT _____ CORGI ID No. _____

SIGN _____ DATE _____

SERVICE INTERVAL RECORD

It is recommended that your heating system is serviced regularly
and that you complete the appropriate Service Interval Record Below.

Service Provider. Before completing the appropriate Service Interval Record below, please ensure you have carried out the service as described in the boiler manufacturer's instructions. Always use the manufacturer's specified spare part when replacing all controls

SERVICE 1 DATE
ENGINEER NAME
COMPANY NAME
TEL No.
CORGI ID CARD SERIAL No.
COMMENTS
SIGNATURE

SERVICE 2 DATE
ENGINEER NAME
COMPANY NAME
TEL No.
CORGI ID CARD SERIAL No.
COMMENTS
SIGNATURE

SERVICE 3 DATE
ENGINEER NAME
COMPANY NAME
TEL No.
CORGI ID CARD SERIAL No.
COMMENTS
SIGNATURE

SERVICE 4 DATE
ENGINEER NAME
COMPANY NAME
TEL No.
CORGI ID CARD SERIAL No.
COMMENTS
SIGNATURE

SERVICE 5 DATE
ENGINEER NAME
COMPANY NAME
TEL No.
CORGI ID CARD SERIAL No.
COMMENTS
SIGNATURE

SERVICE 6 DATE
ENGINEER NAME
COMPANY NAME
TEL No.
CORGI ID CARD SERIAL No.
COMMENTS
SIGNATURE

SERVICE 7 DATE
ENGINEER NAME
COMPANY NAME
TEL No.
CORGI ID CARD SERIAL No.
COMMENTS
SIGNATURE

SERVICE 8 DATE
ENGINEER NAME
COMPANY NAME
TEL No.
CORGI ID CARD SERIAL No.
COMMENTS
SIGNATURE

SERVICE 9 DATE
ENGINEER NAME
COMPANY NAME
TEL No.
CORGI ID CARD SERIAL No.
COMMENTS
SIGNATURE

SERVICE 10 DATE
ENGINEER NAME
COMPANY NAME
TEL No.
CORGI ID CARD SERIAL No.
COMMENTS
SIGNATURE

FERROLI TECHNICAL HELPLINE - 08707 282 885

spares & parts online
IBASIS.co.uk®

spares & parts online
IBASIS.co.uk®

Should you require help with any difficulties call our Technical Service Helpline on 08707 282 885

Phone numbers:

Installer _____

Service Engineer _____

BECAUSE OF OUR CONSTANT ENDEAVOUR FOR IMPROVEMENT DETAILS MAY VARY SLIGHTLY FROM THOSE QUOTED IN THESE INSTRUCTIONS.

Ferroli

ALL SPECIFICATIONS SUBJECT TO CHANGE

Please note - to avoid incurring unnecessary expense, in the event of a boiler shut down, check this in not caused by lack of electricity supply, gas supply or low water pressure before calling our Customer Service Helpline.

Lichfield Road, Branston Industrial Estate, Burton Upon Trent, Staffordshire DE14 3HD
Tel. 08707 282 885 - Fax 08707 282 886