Ferroli

GRUPPO FERROLI

OPTIMAX 25 S

wall-mounting gas boiler,
pre-mixed
condensing system boiler

ISO 9001 : 2000
CERTIFIED COMPANY
TÜV CERT
DIN EN ISO 9001

CE

cod. 3544696/5 - 05/2005

INSTRUCTIONS FOR USE INSTALLATION AND MAINTENANCE

G C N° 41-267-22

IMPORTANT

Your "benchmark" Installation, Commissioning and Service Record Log Book is enclosed in the last pages of this manual. "This record must be completed and left with the end user".

Ferroli is a member of the Benchmark initiative and fully supports the aims of the programme. Benchmark has been introduced to improve the standards of installation and commissioning of central heating systems in the UK and to encourage the regular servicing of all central heating systems to ensure safety and efficiency.
Please see installation and servicing guidelines.

⚠	This symbol indicates **"Caution"** and is placed next to all safety warnings. Strictly follow these instructions in order to avoid danger and damage to persons, animals and things.
☞	This symbols calls attention to a note or important notice professionally qualified personnel.

⚠

- Read the warnings given in this manual thoroughly. They provide important information for safe installation, use and maintenance
- Keep the manual carefully for future consultation.
- The instruction manual is an integral and essential part of the product and must be kept safely by the user.
- If the appliance is sold or transferred to another owner or if the owner moves, leaving the appliance behind, always ensure that the manual is kept with the appliance for consultation by the new owner and /or installer.
- Incorrect installation or poor maintenance absolves the manufacturer from all liability for damage to people or property.
- Installation and maintenance must be carried out in conformity with current legislation, according to the manufacturer's instructions and by qualified personnel.
- Before cleaning or maintenance, disconnect the appliance from the mains via the switch on the appliance or a suitable isolating device.
- In the event of malfunction or faulty operation, switch off the appliance. Do not attempt to repair or carry out any other operation on the appliance directly. Contact qualified personnel only.
- Repairs or the replacement of components must be carried out exclusively by qualified personnel using original spare parts only. Failure to respect the above my compromise the safety of the appliance.
- To guarantee efficient operation, the appliance must be serviced once a year by an authorised service centre.
- The appliance may not be used for purposes other than those for which it was explicitly designed. Any other use is considered improper and therefore dangerous.
- Incorrect installation and use or failure to follow the instructions provided by the manufacturer absolve the manufacturer from all liability for damage.
- After unpacking, check that the contents are complete and undamaged.
- Keep packing out of reach of children as it is potentially hazardous.
- To clean external parts, use a damp cloth moistened with soapy water if necessary. Avoid using abrasive cleaning products and solvents.

Declaration of conformity

CE

Manufacturer: FERROLI S.p.A.
Address: Via Ritonda 78/a 37047 San Bonifacio VR Italy
declares that this unit complies with the following EU directives:

- Gas Appliance Directive 90/396
- Efficiency Directive 92/42
- Low Voltage Directive 73/23 (amended by 93/68)
- Electromagnetic Compatibility Directive 89/336 (amended by 93/68)

President and Legal Representative
Cav. del Lavoro
Dante Ferroli

1. OPERATING INSTRUCTIONS 4

1.1 Introduction 4
1.2 Control panel 5
1.3 Turning ON and OFF 6
1.4 Adjustments 6
1.5 Maintenance 7
1.6 Faults 7

2. INSTALLATION 8

2.1 General Instructions 8
2.2 Boiler location 9
2.3 Water connections 10
2.4 Connection to the gas system 12
2.5 Electrical Connections 12
2.6 Flue system 15
2.7 Condensate outlet connection 21

3. SERVICE AND MAINTENANCE 23

3.1 Adjustments 23
3.2 System start-up 23
3.3 Maintenance 24
3.4 Troubleshooting 26

4 TECHNICAL CHARACTERISTICS AND DATA 28

4.1 Dimensions and connections 28
4.2 General view and main components 29
4.3 Hydraulic diagram 30
4.4 Technical data table 31
4.5 Diagrams 32
4.6 Wiring diagram 33

BENCHMARK 34

1. OPERATING INSTRUCTIONS

1.1 Introduction

Dear Customer,

Thank you for choosing **Optimax 25 S**, a FERROLI wall-mounted boiler of the latest generation, featuring advanced design and cutting-edge technology.

Optimax 25 S is a high-efficiency **condensing pre-mix** appliance for heating with extremely low emissions, running on natural gas or LPG.

The **boiler** consists of an aluminium laminar heat exchanger providing effective condensation of the water vapour contained in the flue gases, permitting extremely high efficiency.

Above the heat exchanger, in the boiler, there is a **pre-mix burner**, with a large ceramic surface, equipped with electronic ignition and ionization flame control, which achieves extremely low emissions while ensuring high reliability and long life operation.

The boiler is totally **room sealed** from the installation room: the air needed for combustion is drawn from outside. The boiler also includes a modulating speed fan, modulating gas valve, pumps, expansion vessel, safety valve, flow sensor, temperature sensors, a safety thermostat and a low pressure sensor.

Thanks to the **twin microprocessor** control and adjustment system with advanced self-diagnosis, unit operation is for the most part automatic. The power for heating is automatically governed by the control system according to the indoor and outdoor characteristics (with an optional outdoor sensor installed), the characteristics of the building and of its location.

The user only has to set the temperature desired inside the home (by means of an optional room thermostat or remote control, which is required under the building regulations 2002) or regulate the temperature of the system. The adjustment and control system will provide optimum operation throughout the year.

The display continuously provides information on the unit's operating status and it is easily possible to obtain additional information on the sensor temperatures, set-points, etc. or configure them. Any operating problems associated with the boiler or system is immediately signalled by the display and, if possible, corrected automatically.

1.2 Control panel

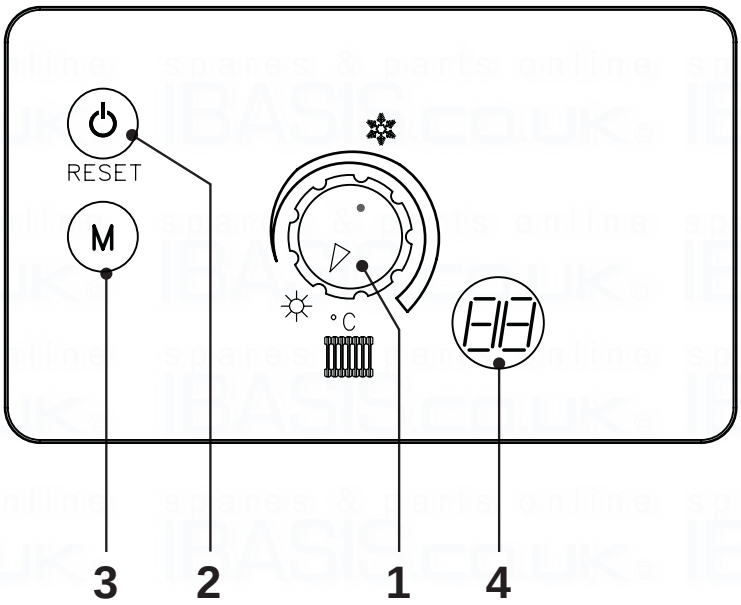

fig. 1

1 - System temperature adjustment / Summer/Winter selection

This knob is used to adjust the system temperature and can switch over between summer / winter. To increase the system temperature, turn the knob clockwise; anticlockwise to decrease it. To select the summer mode, turn it anticlockwise to the minimum setting.

2 - ON-OFF / Reset / Test

Holding the key down for at least 5 seconds turns off the boiler. To turn it back on, press the key again for 5 seconds.

Pressing the key resets boiler operation after a shutdown or lock-out.

Pressing the key 3 times within 5 seconds automatically takes you to TEST operation.

3 - Multi-function

In combination with the reset key, this is used to access the Installer menu.

4 - Operating display

On stand-by and during boiler operation this indicates the boiler operating temperature, a flame (point at bottom lit up) or a fault code if a problem occurs.

1.3 Turning ON and OFF

Ignition

- Open the gas isolation valve on the boiler.
- Purge the gas supply.
- Turn on the electrical switch or insert the plug of boiler.
- The boiler is now ready to function automatically whenever the external controls are calling for heat.

Turning off

Press the ⏻ key for 5 seconds (see fig. 1).

When the boiler is turned off with this key, the electronic card is still powered, heating operation is disabled and the display appears ⏻ but the frost protection is still active.

Close the gas cock ahead of the boiler and disconnect electrical power.

⚠ To avoid damage caused by freezing during long shutdowns in winter, it is advisable to drain all water from the system.

1.4 Adjustments

Room temperature adjustment (with room thermostat on)

Using the room thermostat, set the temperature desired in the rooms. Controlled by the room thermostat, the boiler lights and heats the system water to the set system delivery setpoint temperature. The boiler turns off when the desired temperature in the rooms is reached.

If the room thermostat or the remote control are not installed the boiler will keep the system at the set system delivery setpoint temperature.

Heating temperature setting

To set the system delivery temperature, turn the knob (ref. 1 - fig. 1). It can be varied from a minimum of 30 °C to a maximum of 90 °C.

Turning the knob sets the required temperature (clockwise to increase, anticlockwise to decrease) that is shown on the display. During the setting, the display quickly blinks and once defined it stops blinking after 2 sec. and goes back to showing the actual operating temperature.

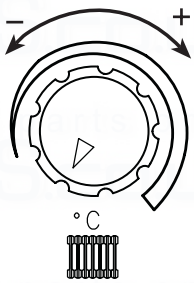

Summer/Winter selection

To select Summer/Winter, use knob 1 (fig. 1).

Turning it onto ☼ (Summer) turns off the heating function but the frost protection stays on.

Turning it onto ❄ (Winter) turns on heating.

☞ If the boiler is also used for hot water production do not select the summer position as this will turn this off also.

1.5 Maintenance

It is strongly recommended that an annual maintenance of the boiler is carried out by a qualified gas engineer. Please refer to the "maintenance" section in this manual.

The casing, the control panel and the aesthetic parts of the boiler can be cleaned using a soft and damp cloth.

do not use abrasives or solvents.

1.6 Faults

In the event of operating problems, the display blinks and a fault identification code appears.

Listed below are the faults that can be caused by simple, user-detectable problems.

The boiler is equipped with an advanced self-diagnosis system. In the event of trouble with the boiler, the display will show the fault code. There are faults that in order to restore operation it suffices to press RESET (2 - fig. 1); if the boiler fails to start, it is necessary to resolve the fault indicated by the operating LEDs (faults from 1 to 25); other faults cause temporary shutdown that are automatically reset as soon as the value comes back within the boiler's normal working range (faults from 30 to 39).

Example

DISPLAY	Fault	Cure
01	Boiler failed to light	Make sure that the gas isolation valves up-stream of the boiler and on the meter are open. Press the RESET button (2 Fig. 1).
37	Insufficient system pressure	Fill the system to 1-1.5 bar by use of the filling loop.

If the problem remains afther two attempts at resetting, contact your nearest FERROLI Caresafe.

For other faults, refer to section 3.4 "Troubleshooting".

☞ Before calling the FERROLI Caresafe, check that the problem is not due to there being no gas or electricity.

2. INSTALLATION

2.1 General Instructions

This device must only be used for the purpose for which it is specifically designed. This unit is designed to heat water to a temperature below boiling point and must be connected to a heating system and/or a water supply system for domestic use, compatible with its performance, characteristics and its heating capacity. Any other use is considered improper.

BOILER INSTALLATION MUST ONLY BE PERFORMED BY QUALIFIED PERSONNEL, IN ACCORDANCE WITH ALL THE INSTRUCTIONS GIVEN IN THIS TECHNICAL MANUAL, THE PROVISIONS OF CURRENT LAW, THE RECOMENDATION OF BS STANDARDS, ANY LOCAL REGULATIONS AND THE RULES OF COMPETENT WORKMANSHIP.

Incorrect installation can cause damage or physical injury for which the manufacturer declines any responsibility.

This appliance must be installed strictly in accordance with these instructions and regulations:

The Gas Safety Regulations (Installations & Use).
The Local Building Regulations.
The Building Regulations (Part L).
The Buildings Standards (Scotland - Consolidated) Regulations.
British Standards Codes of Practice:

B.S. 5440 Part 1 Flues
B.S. 5440 Part 2 Air supply
B.S. 5449 FORCED CIRCULATION HOT WATER SYSTEMS
B.S. 6798 INSTALLATION OF GAS FIRED HOT WATER BOILERS
B.S. 6891 GAS INSTALLATIONS
B.S. 7671 IEE WIRING REGULATIONS
B.S. 4814 SPECIFICATION FOR EXPANSION VESSELS
B.S. 5482 INSTALLATION OF LPG
B.S. 7593 TREATMENT OF WATER IN DOMESTIC HOT WATER CENTRAL HEATING SYSTEMS
B.S. 5546 INSTALLATION OF HOT WATER SUPPLIES FOR DOMESTIC PURPOSES

Model Water Bye Laws
B.S. 5955-8 PLASTIC PIPEWORK INSTALLATION

For Northern Ireland the rules in force apply

2.2 Boiler location

The unit's combustion circuit is sealed off from the installation room. The installation room must be sufficiently well ventilated to prevent any dangerous conditions from forming in the event of even slight gas leakage. This safety standard is required by the EEC Directive no. 90/396 for all gas units, including those with a so-called sealed chamber.

Therefore the place of installation must be free of dust, flammable materials or objects or corrosive gases. The room must be dry and not subject to freezing.

The boiler is designed to be installed on a solid wall. The wall fixing must ensure a stable and effective support for the appliance, using the bracket and fixings supplied.

If the unit is enclosed in cupboard or mounted alongside, there must be space for normal maintenance work. Fig. 2 and tab. 1 give the minimum clearances to leave around the unit.

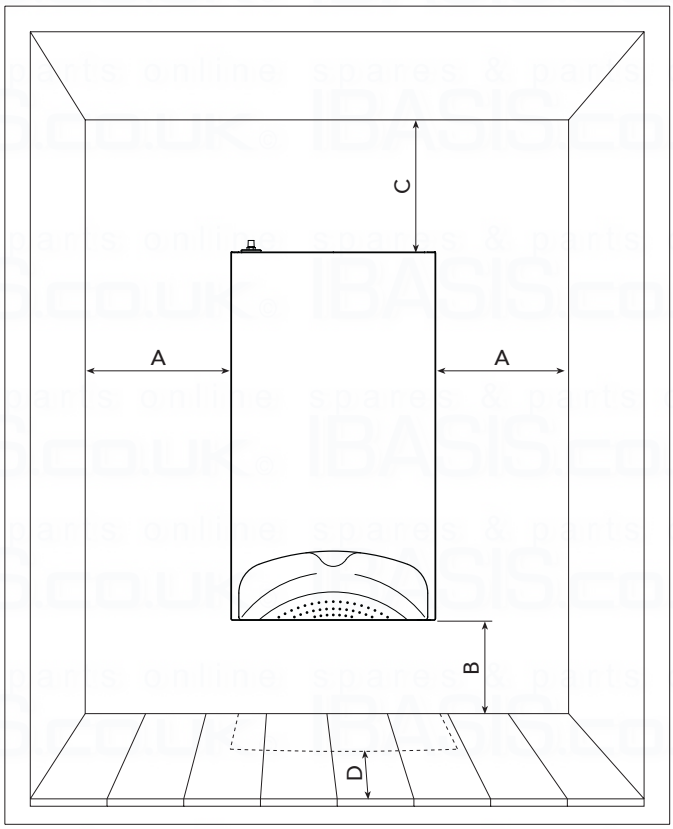

fig. 2

Table 1

	Minimum	Recommended
A	30 mm	300 mm
B	200 mm	300 mm
C	280 mm	300 mm
D	15 mm (via an openable panel)	> 600 mm

2.3 Water connections

The heating capacity of the unit should be previously established by calculating the building's heat requirement according to current regulations. For good operation and long life of the boiler, the plumbing system must be well proportioned and always complete with all those accessories that guarantee regular operation and running.

If the flow and return pipes follow a path where air pockets could form in certain places, it is advisable to install air vents at these points. Also, install a drain plugs at the lowest point in the system to allow its complete emptying.

If the boiler is installed at a lower level than the system, it is advisable to provide a non-return valve to prevent the natural circulation of system water.

The temperature differential between the flow and the return to the boiler should not exceed 20° C (11° recommended).

⚠ Do not use the water system pipes to earth electrical appliances.

Before installation, carefully clean all the pipes of the system to remove residues or impurities that could affect the unit's good working. Flush system in accordance with BS 7593.

Make the connections to the corresponding connections as shown in Fig. 3.

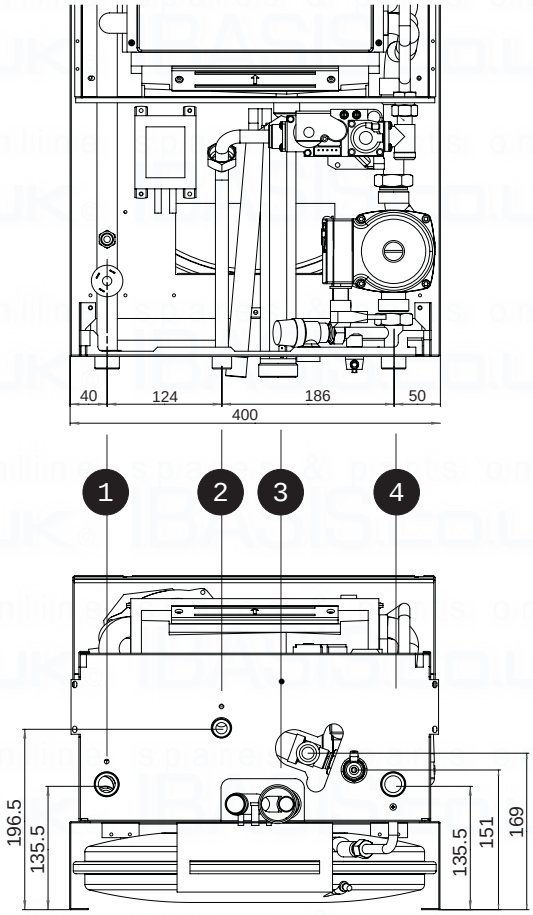

fig. 3

Key

1 CH flow (22 mm with isolation valve)
2 Gas inlet (22 mm with isolation valve)
3 Condense outlet
4 CH return (22 mm with isolation valve)

It is advisable to install isolation valves between the boiler and heating system allowing the boiler to be isolated from the system if necessary.

⚠ The safety valve outlet must be connected to a tun-dish or collection pipe to prevent water flowing out onto the ground in the event of over-pressure in the heating circuit. If this is not done, and the drain valve trips and floods the room, the boiler manufacturer is not to be held responsible.

Make the boiler connection in such a way that its internal pipes are free of stress.

The connecting kits shown in Fig. 4 are supplied as standard.

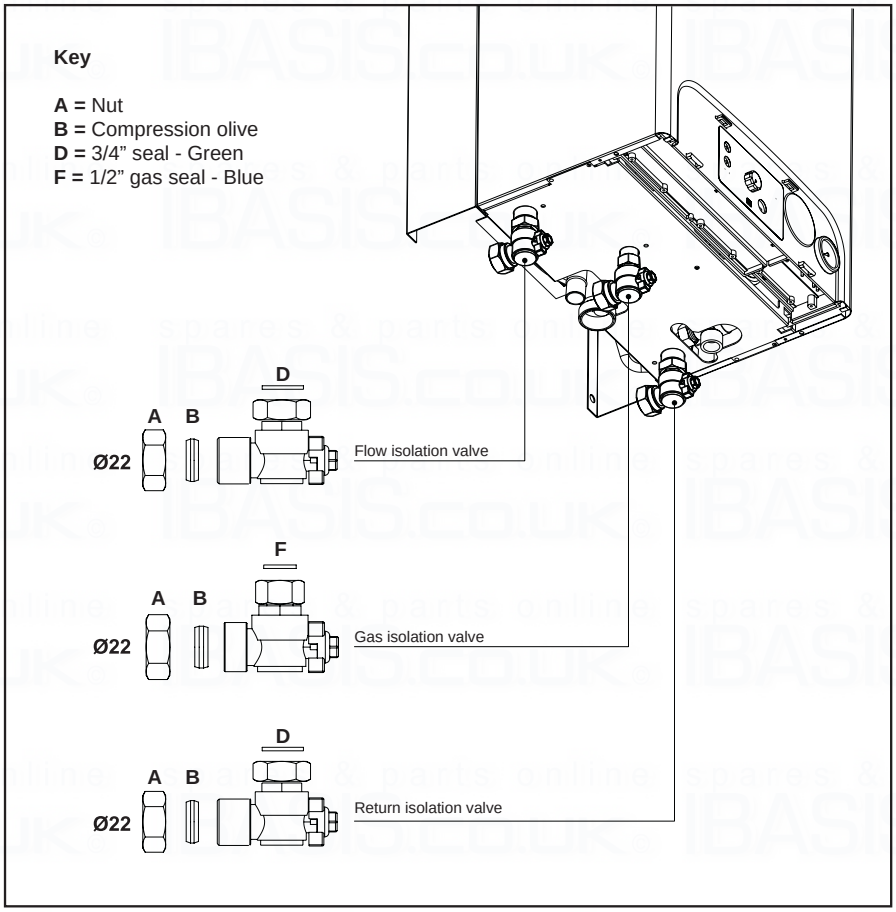

fig. 4

Make Up Water

Provision must be made for replacing water lost from the sealed system. Reference should be made to BS6798, for methods of filling and making up sealed systems. There must be no direct connection between the boiler's central heating system and the mains water supply. The use of mains water to charge and pressurise the system directly, is conditional upon the Local Water Byelaws. Again any such connection must be disconnected after use. The supplied temporary filling loop is shown in fig. 4. Ensure the filling point is on the return pipe to the boiler.

Attention - is drawn to the Model Water Byelaws.

Fittings manufactured from duplex (alpha-beta) brass are not acceptable for underground use and certain water undertakings will not accept their use above ground.

Key

1. Filling point C.H.
2. Temporary connection
3. Cold water supply
4. Double check valve

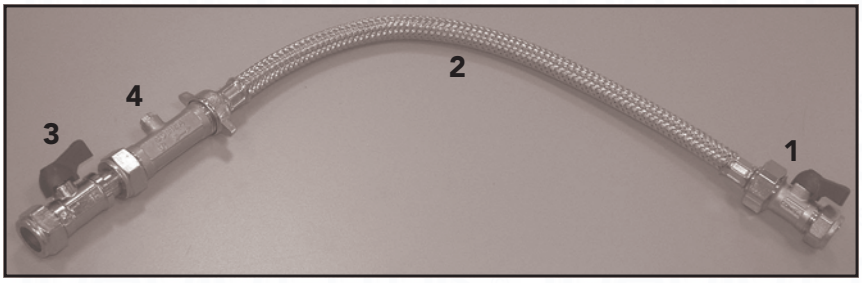

Fig. 5

Water treatment

If treatment is used ferroli limited recommanded only the use of Fernox or Sentinel water treatment products, which must be used in accordance with the manufactures instructions. for further information contact:

Fernox Manufacturing Co. LTD.	Sentinel Division
Cookson Electronics, Farsyth Road	Betz Dearborn LTD
Woking, surry, GU21 5RE	Widnes, Cheshire WA8 8ND
Tel: 0870 8700362	Tel: 0151 424 5351

Note - If the boiler is installed in an existing system any unsuitable additives must be removed by thorough cleansing. All systems should be cleansed according to B.S. 7593.

Note - In hard water areas treatment to prevent lime scale may be necessary.

Note - It is important that the correct concentration of the water treatment product is maintained in accordance with the manufacturers instructions.

2.4 Connection to the gas system

If necessary the local Gas supplier should be consulted, at the installation planning stage, in order to establish the availability of an adequate supply of gas.

An existing service pipe must **not** be used whitout prior consultation with the local Gas supplier.

A gas meter can only be connected by the Local Gas supplier, or by a Local Gas suppliers Contractor.

Installation pipes should be fitted in accordance with BS6891.

Appliance inlet working pressure must be 20mbar MINIMUM, for NG and 37 mbar minimum for LPG.

Do not use pipes of a smaller size than the boiler inlet gas connection (22 mm).

⚠ The complete installation must be tested for gas soundness and purged as described in BS689. All pipework must be adquately supported. An isolating gas valve is provided and should be fitted on the boiler gas inlet. Please wait 10 minutes when ligthing from cold before checling gas rate. Gas pressures should be checked afther the boiler has operated for 10 minutes to reach thermal equilibrium.

⚠ The connecting kits shown in Fig. 4 are supplied as standard.

2.5 Electrical Connections

The unit must be installed in conformity with current national and local regulations.

Connection to the electrical grid

The boiler must be connected to a single-phase, 230 Volt-50 Hz electric line.

⚠ The unit's electrical safety is only guaranteed when correctly connected to an efficient earthing system executed according to current safety standards. Have the efficiency and suitability of the earthing system checked by professionally qualified personnel. The manufacturer is not responsible for any damage caused by failure to earth the system. Also make sure that the electrical system is adequate for the maximum power absorbed by the unit, as specified on the boiler dataplate, in particular ensuring that the section of the system's cables is suitable for the power absorbed by the unit.

The boiler is prewired and provided with a cable for connection to the electricity line. The connections to the supply must be made with a permanent connection and equipped with a double pole switch whose contacts have a minimum opening of at least 3 mm, and fused at max. 3A between the boiler and the line. It is important to respect the polarities (LIVE: brown wire / NEUTRAL: blue wire / EARTH: yellow-green wire) in making connections to the electrical supply.

Central heating request

The heat demand can be done by the room thermostat (terminal 4-5) or by a switch line 230 V phase (terminal 4).

Standard Systems

For a general pipe layout and wiring diagram on the "S" and "Y" plan systems please see fig. 6a, 6b, and 7a, 7b.

OPTIMAX "S" Plan

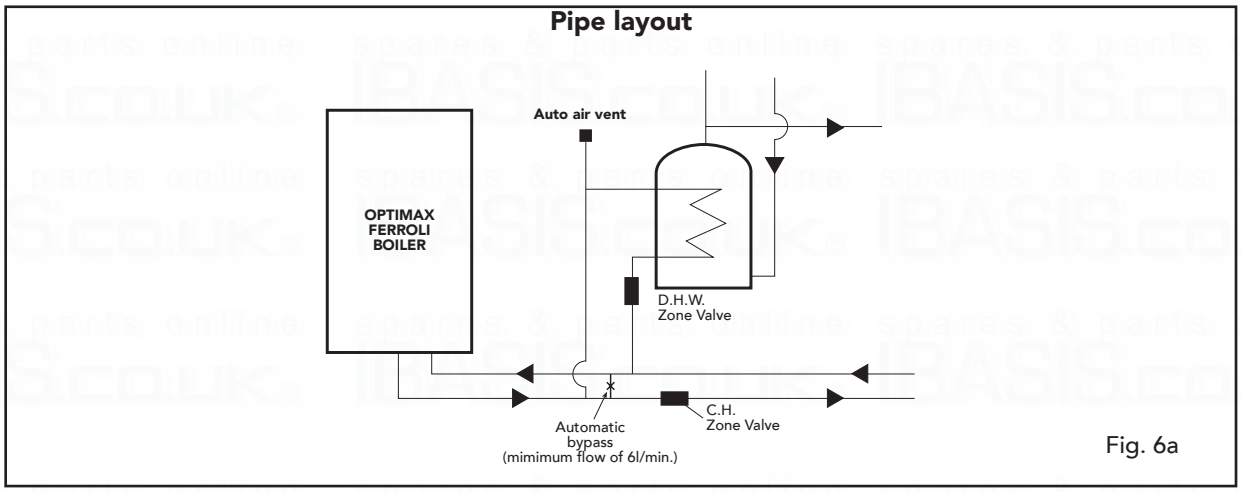

Fig. 6a

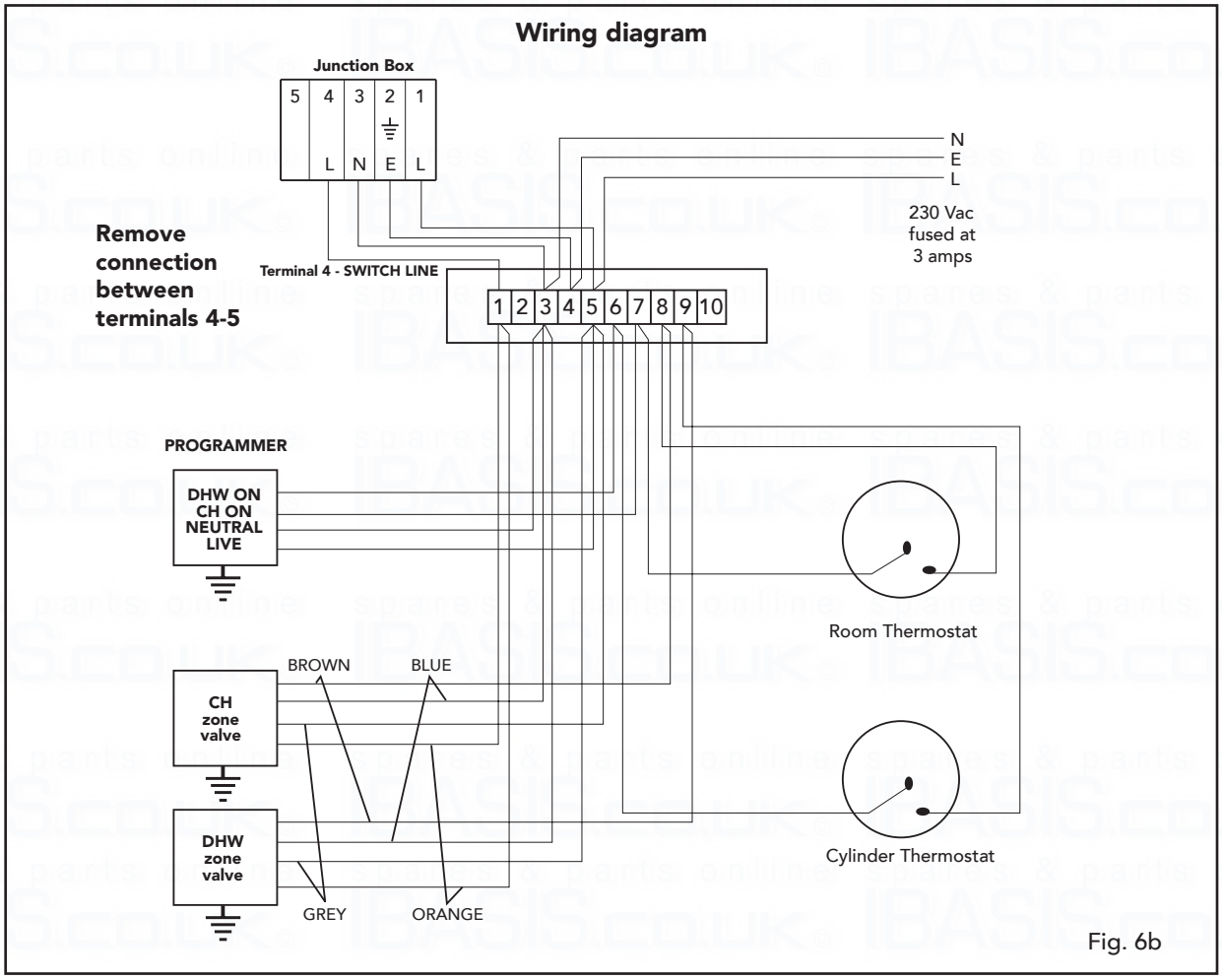

Fig. 6b

OPTIMAX "Y" Plan

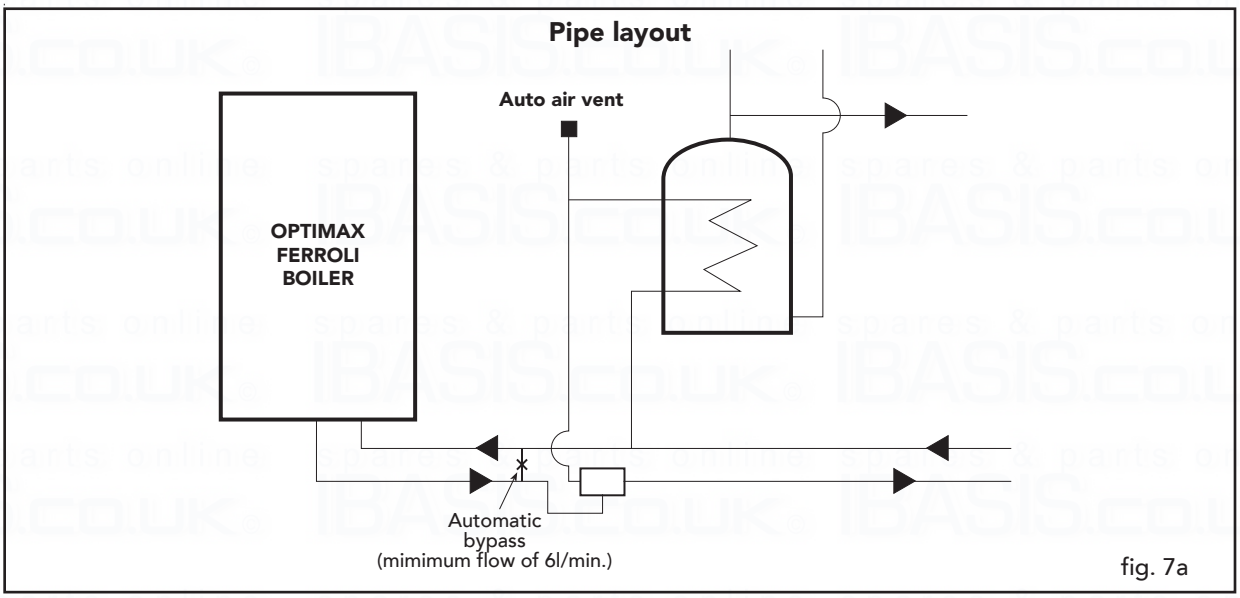

fig. 7a

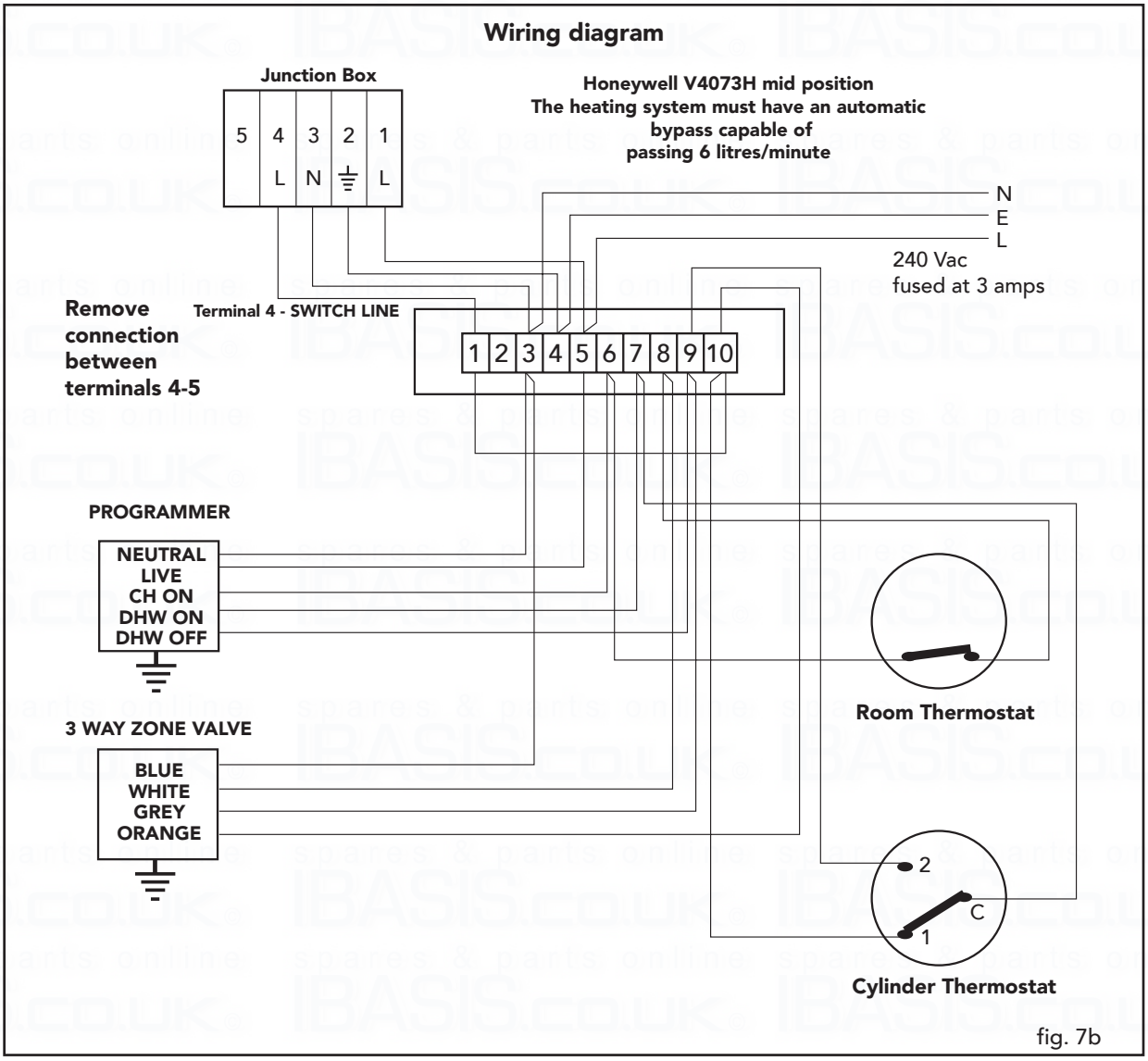

fig. 7b

The user must never change the unit's power cable. If the cable gets damaged, switch off the unit and have it changed only by professionally qualified personnel. If changing the electric power cable, use only **"HAR H05 VV-F"** 3x0.75 mm^2 cable with a maximum outside diameter of 8 mm.

Acces to the electrical terminal board

Follow the instructions given in fig. 8 to access the electrical connection terminal board (fig. 8). The layout of the terminals for the various connections is given in the wiring diagram in the diagram fig. 9.

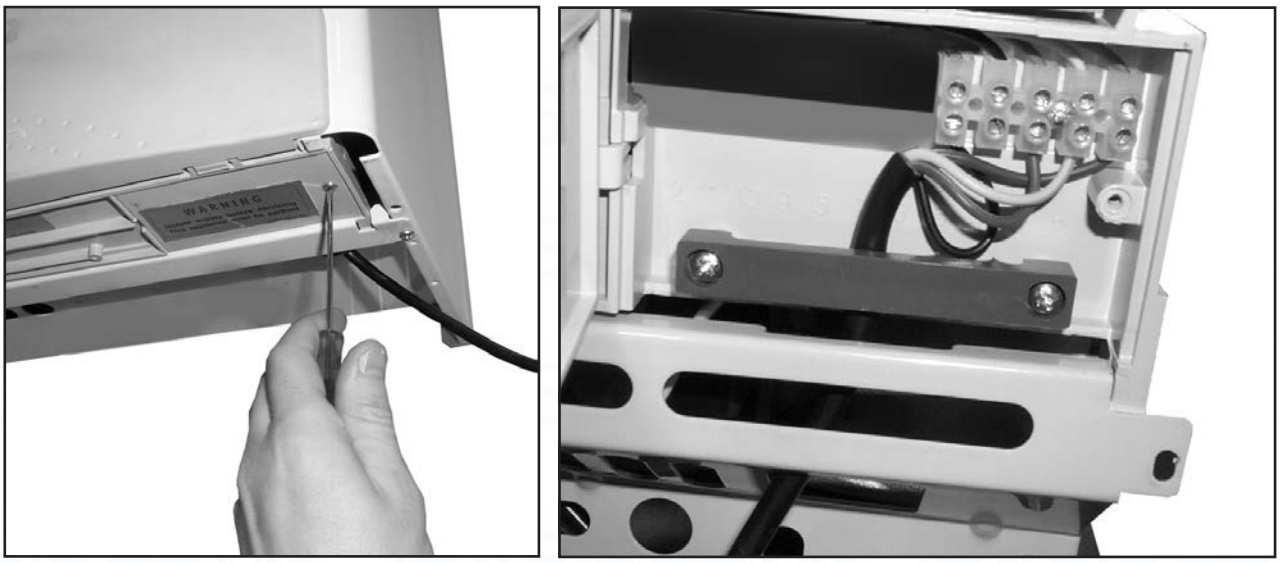

fig. 8

Room thermostat

REMOVE CONNECTIONS 4 - 5 IF EXTERNAL CONTROL FITTED.

WARNING: the room thermostat works at 230V.

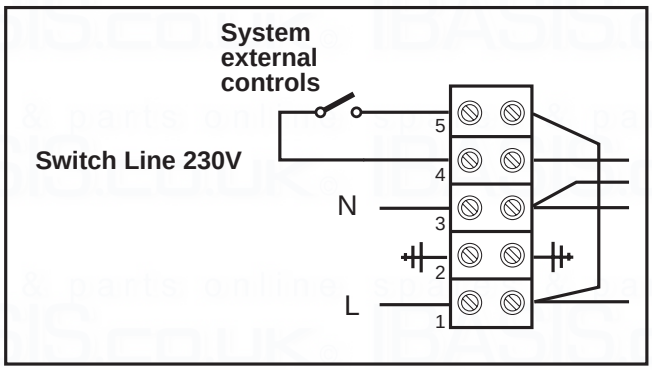

fig. 9

2.6 Flue system

The unit is "type C" with a **sealed chamber** and forced draught, the air inlet and flue outlet must be connected to one of the following flue systems. With the aid of the tables and methods of calculation indicated, before commencing installation, it is first necessary to check that the flue system does not exceed the maximum permissible length. The current standards and local regulations must be observed.

It should be notes that only Ferroli flue system and accessories should be used on this appliance, as per BS 5440 2000 and C.E. test certification.

Connection with concentric flue system

The unit can be connected to a concentric air/flue duct with a wall or rooftop outlet as shown on the following drawings. Numerous accessories are available on request to meet the various installation requirements. Please refer to our "flue manual" or the price list.

Standard concentric flue installation

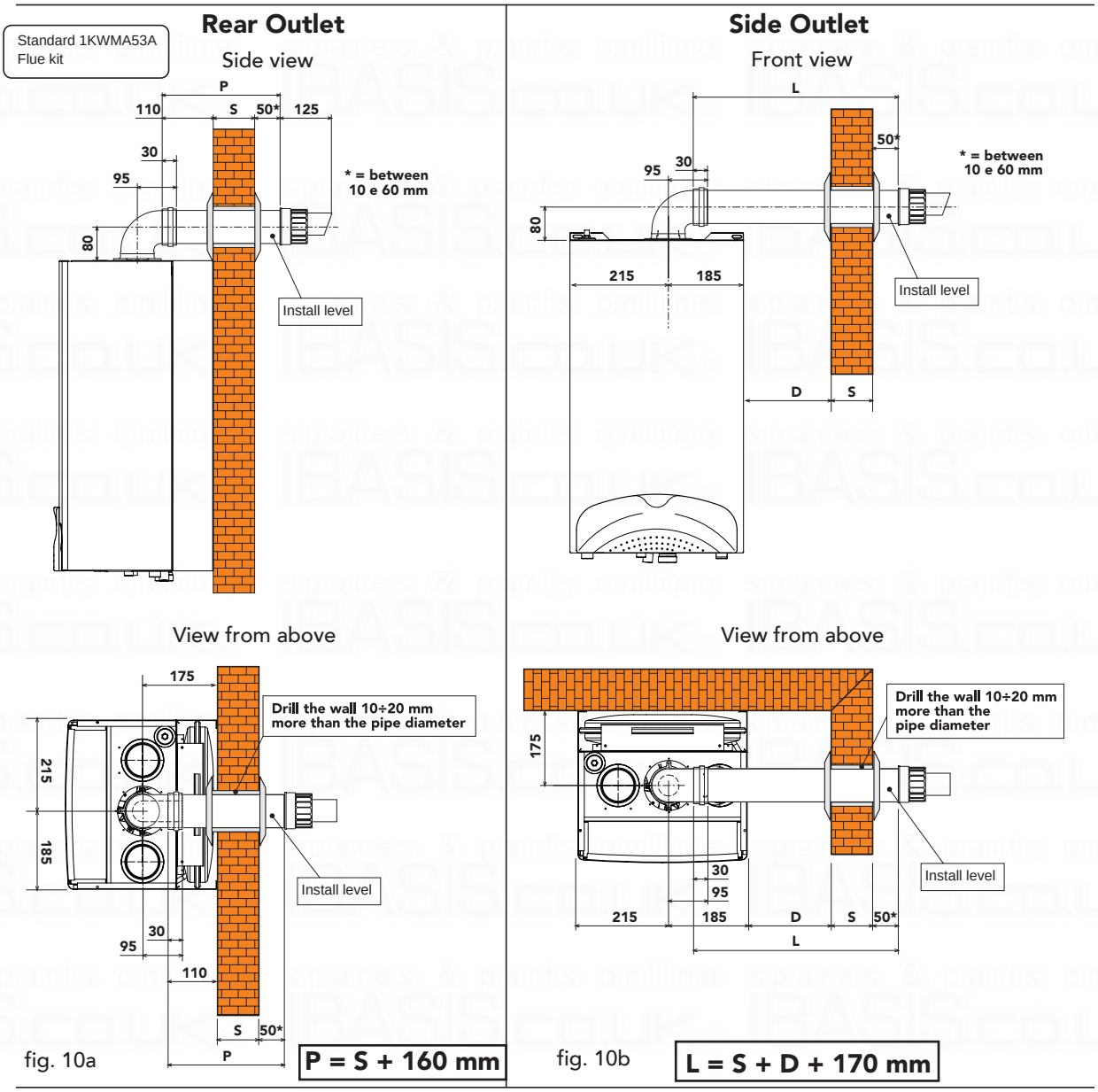

fig. 10a **P = S + 160 mm**

fig. 10b **L = S + D + 170 mm**

Horizontal flue installation

1. Define the position for installing the unit.
2. If using standard flue (1KWMA53A) this must be installed level, for non-standard flue lenghts over 1 Mtr a fall of 3 mm per metre should be incorporated.
3. Make a hole of diameter 10 - 20 mm greater than the nominal diameter of the concentric pipe used.
4. If necessary, cut the end pipe to size, ensuring that the external pipe protrudes from the wall by between 10 and 60 mm (fig. 10a and 10b). Remove the cutting burrs.
5. Connect the flue to the boiler, positioning the seals correctly. Seal the flue into the wall with silicone or sand + cement and cover with wall seals provided.

☞ Flue seals should be lubricated with a silicone type grease to prevent damage (grease not supplied)

Vertical Outlet

The total length in equivalent metres of the concentric flue must not exceed the maximum lengths stated in the following table, note that each bend gives rise to the stated reduction. For example, a duct = 60/100 composed of 1 bend of 90° +1 horizontal metre + 2 bends of 45° + 1 horizontal metre has a total equivalent length of 4 metres.

Vertical flueing

The installation of a concentric vertical flue can be carried out as follows,

Install the appliance as previously mentioned in this manual.

1. Connect onto the flue assembly at the top of the appliance a concentric vertical adaptor part number 1KWMA71W,
2. Use the required amount of 1mtr flue extensions (part number 1KWMA56U) inserting them spigot down ensuring the seals are well lubricated with silicone grease (not supplied) and correctly located into the sockets.
3. If required 45° bends (Part number 1KWMA64A) may be used with a resistance value of 0.5mtrs each, the flue should be routed in such away to avoid any unnecessary deviation and thus minimise the amount of bends required.
4. The termination should be made through our concentric flue outlet (part number 1KWMA83U) in conjunction with a roof slate pitched (part number 1KWMA82U)or flat roof (part number 1KWMA81U) The storm collar must be fixed on using the three screws provided and sealed with an external grade silicone (not supplied).
5. For longer flue lengths a 125mm concentric flue system is available.
6. All flue installations must comply with BS5440 part 1 and must only be of Fèrroli manufacture. The vertical flue must continually rise and be supported throughout its length. The flue must be inspected whilst commissioning the appliance to ensure it is sound throughout its length.

This information is for guidance purposes and Fèrroli will in no way be held responsible for incorrect installation following this guide.

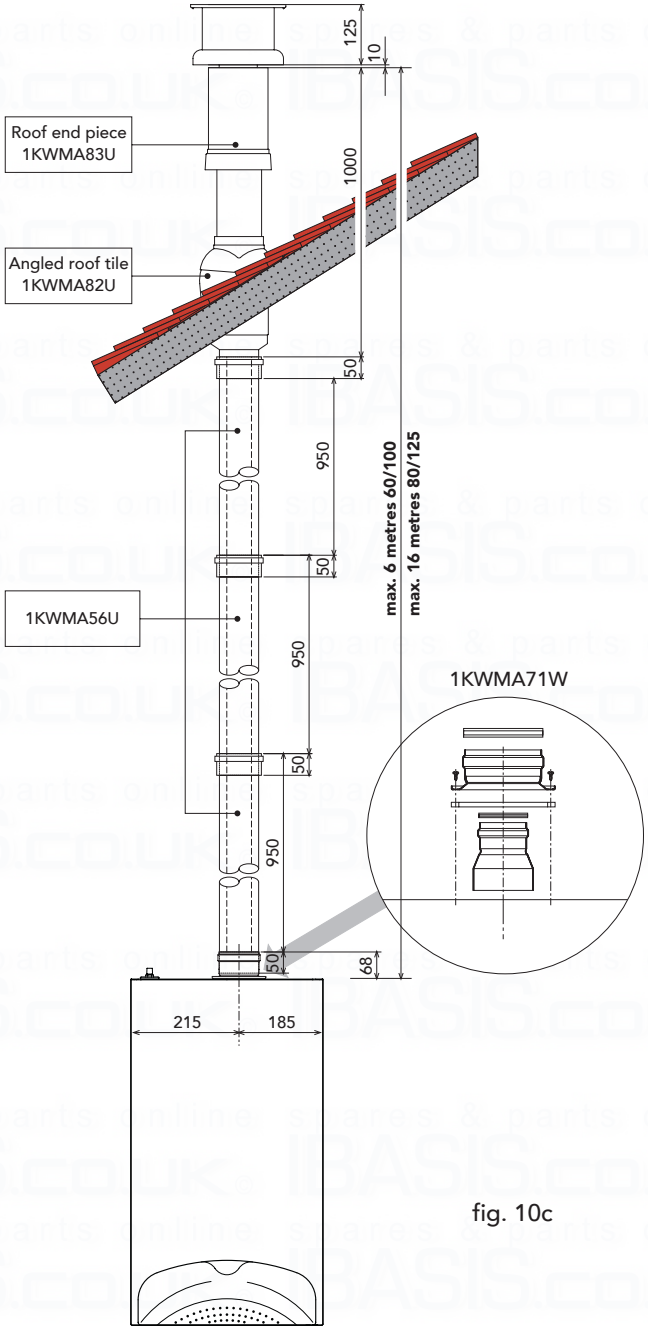

fig. 10c

Table 2a

	Ø mm 60/100	Ø mm 80/125
Maximum permissible duct length (Horizontal)	5 m*	15 m
Maximum permissible duct length (Vertical)	6 m*	16 m

Table 2b

Reduction factors for bends	
Concentric bend at 90° - Ø 60/100 mm	1 m
Concentric bend at 45° - Ø 60/100 mm	0,5 m
Concentric bend at 90° - Ø 80/125 mm	0,5 m
Concentric bend at 45° - Ø 80/125 mm	0,25 m

Connection with 80 mm pipe system

The unit can be connected to a system of separate air/flue ducts for a wall or rooftop outlet as shown on the drawings 11 - 12 alongside. Numerous accessories are available on request to meet the various installation requirements. The components used most frequently are stated in tables 4 - 5. Please refer to the flue accessory catalogue or the price list for additional components.

To check you do not exceed the maximum permissible duct length, it is necessary to make a simple calculation before installation:

1. For each component, tables 4 - 5 provide an "equivalent load loss in linear metres", depending on the position of installation of the component (with air suction or flue extraction, vertical or horizontal).

   The loss is called "equivalent in linear metres" since it is compared to the loss of one metre of duct in air suction (defined as equal to 1). For example, a bend at 90° of Ø80 in flue extraction has an equivalent loss of 2.5 linear metres, i.e. it has a loss equal to that of 2.5 linear metres of duct in air suction.

2. After defining the layout of the system of split flues, add up the losses in equivalent metres, depending on the installation position, of all the components and accessories in the system.

3. Check that the total calculated loss is less than or equal to **75** equivalent **metres**, i.e. the maximum permissible for this model of boiler.

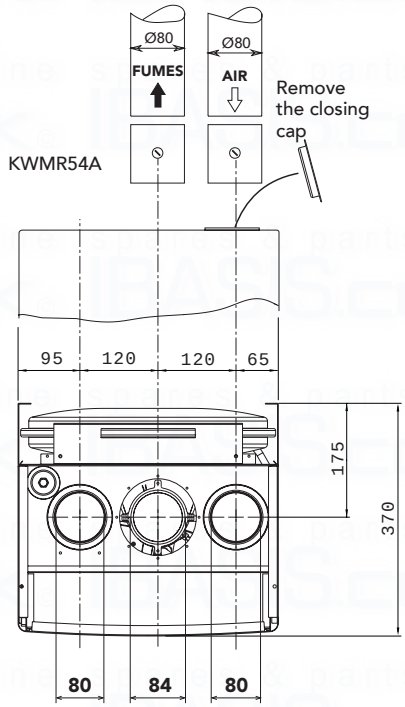

fig. 11

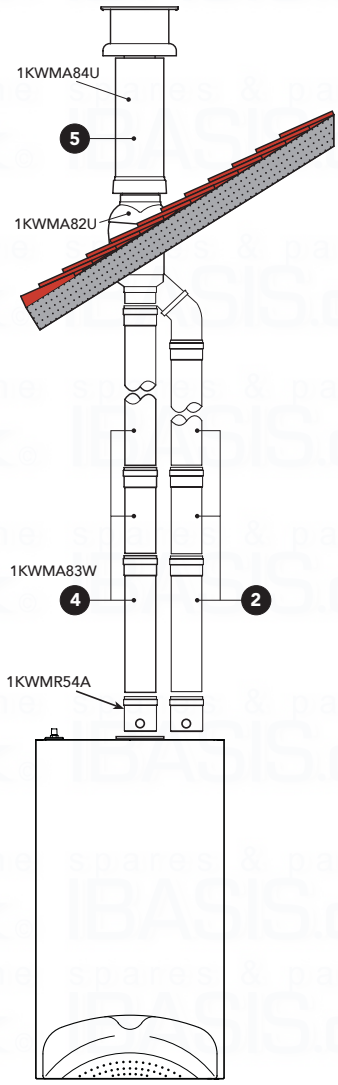

fig. 12

Table 3			
Ref.	**N° Pieces**	**Description**	**Equivalent loss**
2	**23**	Vertical air pipe Ø80	23,0 m
4	**23**	Vertical flue pipe Ø80	36,8 m
5	**1**	80 Ø vertical flue Kit	12,0 m
		Total	**71,8 m**

Table of flue and accessory

Table 4

Accessories Ø 80		Equivalent losses in metres (linear)			
		Air		Flue	
Description		Vertical	Horizontal	Vertical	Horizontal
Pipe Ø 80 male-female	KWMA83W • 1,00 m	1	1	1.6	2
Bend 45° Ø 80 mm male - female	KWMA65W	1.2		1.8	
Bend 90° Ø 80 mm male - female	KWMA01W	1.5		2.0	

Table 5

Accessories Ø 80		Equivalent losses in metres (linear)			
		Air		Flue	
Description		Vertical	Horizontal	Vertical	Horizontal
Horozontial flue terminal	KWMA86A				5
Horozontial air terminal	KWMA85A		2		
Vertical flue terminal	KWMA84U	12			

The stated loss values refer to genuine Ferroli flue accessories.

Terminal Position

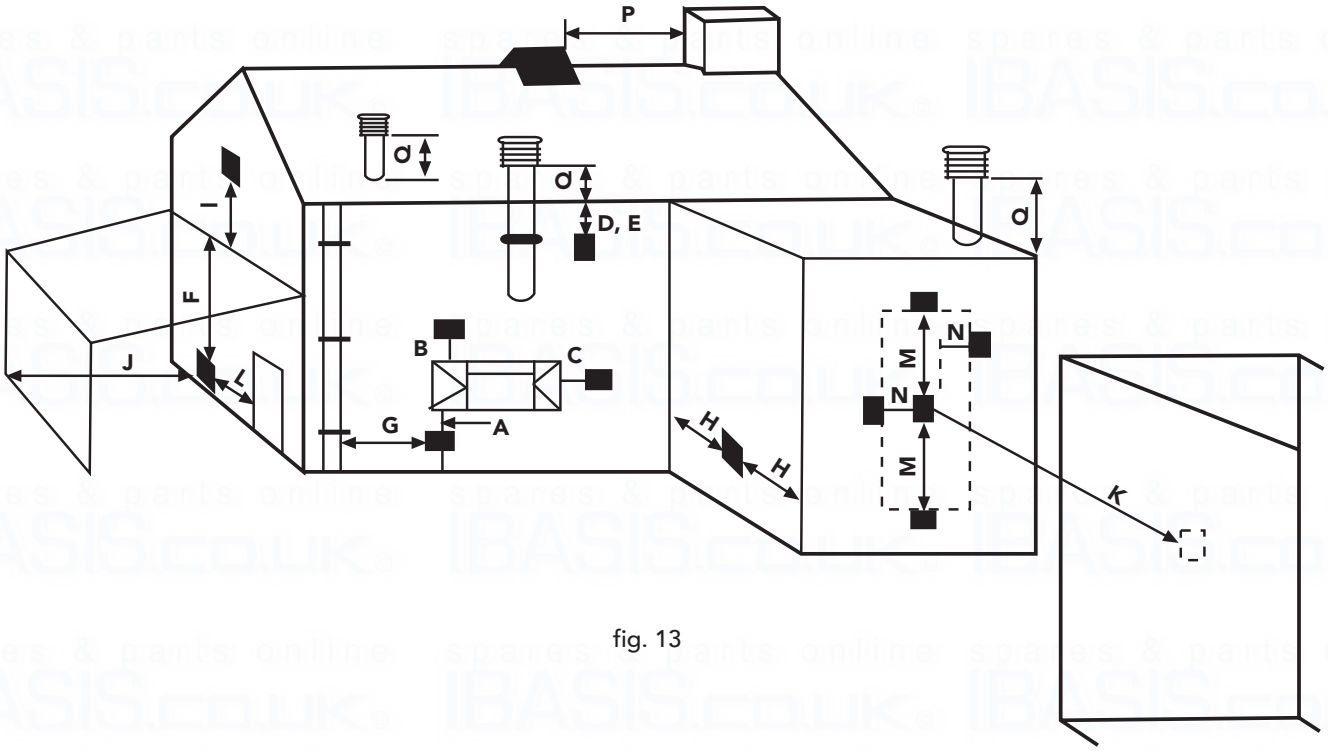

fig. 13

Minimum Dimensions of Flue Terminal Positions

A	Directly below an opening, air brick, opening windows, etc.	300mm
B	Above an opening, air brick, opening windows, etc.	300mm
C	Horizontally to an opening, air brick, opening windows, etc.	300mm
D	Below gutters, soil pipes or drain pipes	75mm
E	Below eaves	200mm
F	Below balconies or car port roof	200mm
G	From a vertical drain pipe or soil pipe	150mm
H	From an internal or external corner	100mm
I	Above ground roof or balcony level	300mm
J	From a surface facing the terminal	600mm
K	From a terminal facing the terminal	1200mm
L	From an opening in the car port (e.g. door, window) into the dwelling	1200mm
M	Vertically from a terminal on the same wall	1500mm
N	Horizontally from a terminal on the same wall	300mm
O	From the wall on which the terminal is mounted	N/A
P	From a vertical structure on the roof	150mm
Q	Above intersection with roof	300mm

NOTE

N/A = Not applicable

In addition, the terminal should not be nearer than 150mm (fanned draugt) or 300mm (natural draugt) to an opening in the building fabric formed for the purpose of accommodating a built-in element such as a window frame.
Condensing Terminal Positions: If the flue is to be terminated at low level, then the potential effect of the plume must be considered.

The plume should not be directed:
- across a frequently used access route
- towards a window or door
- across a neighbouring property

Connection to collective flues or single flues with natural draught

If you are then going to connect the **Optimax 25 S** boiler to a collective flue or a single flue with natural draught, the flue must be expressly designed by professionally qualified technical personnel in conformity with the standards and rules in force.

In particular, flues must have the following characteristics:

- Be sized according to the method of calculation stated in the standard
- Be airtight to the products of combustion, resistant to the fumes and heat and waterproof for the condensate
- Have a circular or quadrangular cross-section (some hydraulically equivalent sections are permissible), with a vertical progression and with no constrictions
- Have the flue conveying the hot fumes adequately distanced or isolated from combustible materials
- Be connected to just one unit per floor, for at most 6 units in all (8 if there is a compensation duct or opening)
- Have no mechanical suction devices in the main ducts
- Be at a lower pressure, all along their length, under conditions of stationary operation
- Have at their base a collection chamber for solid materials or condensation of at least 0.5 m, equipped with a metal door with an airtight closure.

2.7 Condensate outlet connection

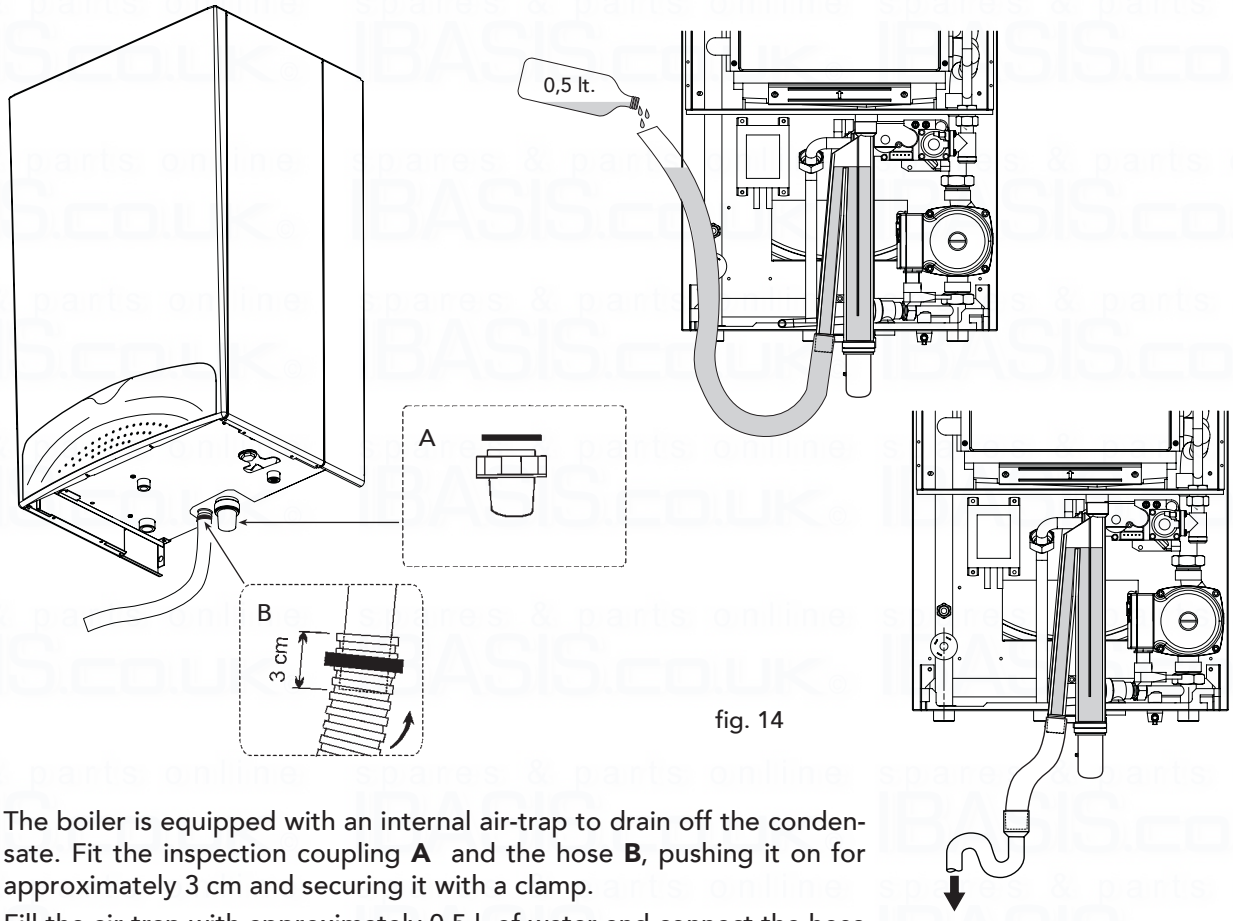

fig. 14

The boiler is equipped with an internal air-trap to drain off the condensate. Fit the inspection coupling **A** and the hose **B**, pushing it on for approximately 3 cm and securing it with a clamp.

Fill the air-trap with approximately 0.5 l. of water and connect the hose to the waste system.

Condensate discharge

Where possible the condensate should discharge into an internal soil pipe or waste system. The minimum pipe diameter required is 22 mm, a trap has already been fitted to the appliance with a flexible tail to facilitate the connection to the condensate discharge pipe.

The pipe should be a solvent weld plastic, not copper, as the condensate has a ph value of 4 (slightly acidic).

Where it is not possible to terminate internally, the condensate discharge pipe may be run outside (see below drawing).

Any external run is subjet to freezing, in severe weather conditions. To avoid this the pipework should be installed to dispose of the condensate quickly, with as much as possible run internally, before passing through the wall.

Pipework external to the building should be increased in diameter to 32 or 40 mm solvent weld. It should be run to a external drain or soakaway, with a maximum lenth of 3 metres.

If a soakaway (condensate absorption point) is used, it should be constructed as shown below.

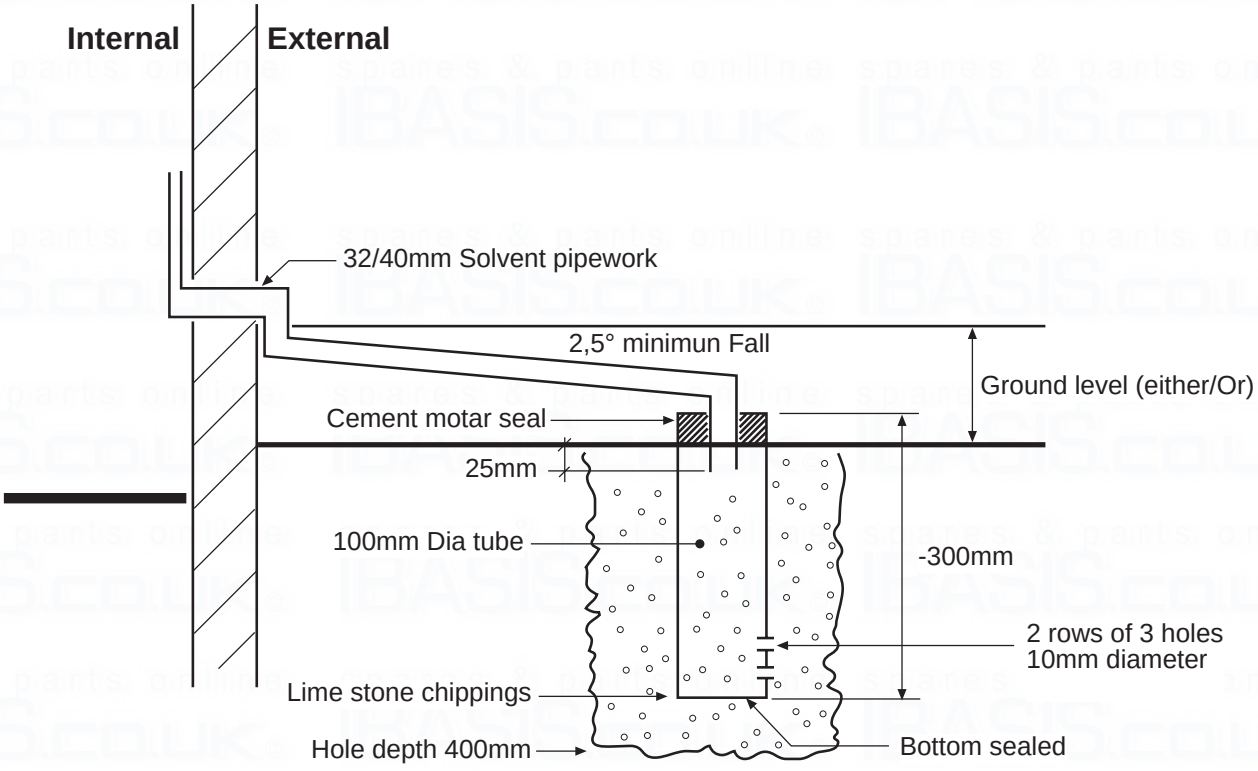

fig. 15

Note: or use a purpose made type Soakaway for example Mc Alpine SOAK1GR.

3. SERVICE AND MAINTENANCE

3.1 Adjustments

All adjustment and conversion operations must be carried out by Qualified Personnel such as the personnel of the Local After-Sales Technical Service.

FERROLI declines any responsibility for damage or physical injury caused by unqualified and unauthorized persons tampering with the device.

Gas supply conversion

The unit can function with either Natural Gas or LPG and is factory-set for use with one of the two gases, as clearly shown on the packing and on the unit's dataplate. Whenever a different gas to that for which the unit is preset has to be used, a conversion kit will be required, proceeding as follows:

1 Remove the casing.
2 Open the airtight chamber.
3 Unscrew the gas coupling **A** on the air/gas mixer.
4 Replace the injector in the mixer with the one contained in the conversion kit.
5 Refit the coupling **A** and check the connection is gastight.
6 Apply the sticker, contained in the conversion kit, near the dataplate.
7 Fit the airtight chamber and casing back on.
8 Check working pressure.
9 Set CO_2 mixture as detailed (page 26).

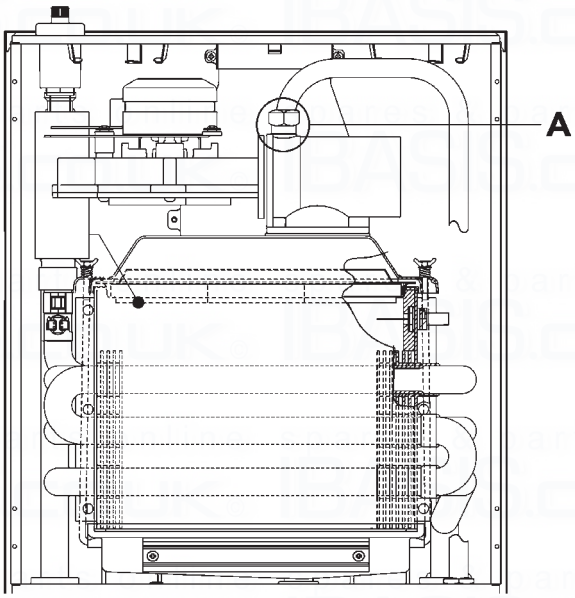

fig. 16

	Natural gas	LPG
Nozzle Ø	See Technical table	

3.2 System start-up

Commissioning must be performed by Qualified Personnel.
Checks to be made at first ignition, and after all maintenance operations that involved disconnecting from the systems or an intervention on safety devices or parts of the boiler:

Before lighting the boiler:

- Open any isolation valves between the boiler and the systems.
- Check the tightness of the gas system, proceeding with caution and use gas leak detection fluid to detect any leaks in connections.
- Fill the water system and make sure that all air contained in the boiler and the system has been vented by opening the air vent valve on the boiler and any vent valves on the system.
- Make sure there are no water leaks in the system, hot water circuits, connections or boiler.
- Make sure the electrical system is properly connected.
- Make sure that the unit is connected to a good earthing system.
- Make sure there are no flammable liquids or materials in the immediate vicinity of the boiler.
- Vent and spin the pump.
- Ensure the flue system is correctly fitted, including terminal locations.

Ignition

- Open the gas valve upstream of the boiler.
- Purge the gas supply and appliance
- Switch on the boiler fused spur.
- The boiler is now ready to function automatically whenever the external controls call for heating.

In case of an electrical power failure while the boiler is working, the burner will go out. When power returns, the boiler will run the self-test cycle again, after which the burner will automatically re-ignite (if there is still demand for heat).

Checks during operation

- Check the tightness of the gas circuit and water systems.
- Check the efficiency of the flue and air-flue ducts while the boiler is working.
- Check that the water is circulating properly between the boiler and the system.
- Make sure that the gas valve modulates correctly.
- Check the proper ignition of the boiler by performing various tests, turning it on and off with the room thermostat or remote control.
- Make sure that the fuel consumption indicated on the meter corresponds to that given in the technical data table in chap. 4.
- Check the parameters are programmed correctly and perform any required customization (power, temperatures, etc.).

Turning off

Press the key for 5 seconds (see fig. 1).

When the boiler is turned off with this key, the printed circuit board is still powered, heating operation is disabled and the display appears but the frost protection, will remain active.

Close the gas cock ahead of the boiler and disconnect electrical power.

To avoid damage caused by freezing during long shutdowns in winter, it is advisable to drain all water from the boiler, or add a suitable antifreeze to the heating system.

3.3 Maintenance

The following operations are strictly reserved for Qualified Personnel, such as corgi registered engineers or Ferroli personeer.

Seasonal inspection of the boiler and flue

It is advisable to carry out the following checks at least once a year:

- The control and safety devices (gas valve, flow meter, thermostats, etc.) must function correctly.
- The flue terminal end piece and ducts must be free of obstructions and leaks.
- The gas and water systems must be sound.
- The burner and exchanger must be clean.
- The electrodes must be free of scale and correctly positioned.
- The water pressure in the heating system must be approx 1 bar; otherwise, bring it to that value.
- The expansion vessel must be filled to 1 bar cold with zero system pressure.
- The gas flow and pressure must correspond to that given in the respective tables.
- The circulating pumps must be vented and free of debris, spun prior to operation.

Opening the casing

To open the boiler casing, you need to follow the sequence given below and the instructions of fig. 17.

1 Using a screwdriver, fully unscrew the 2 screws **"A "**
2 Open by lowering the panel **"B "**
3 Lift and take off the panel **"C "**

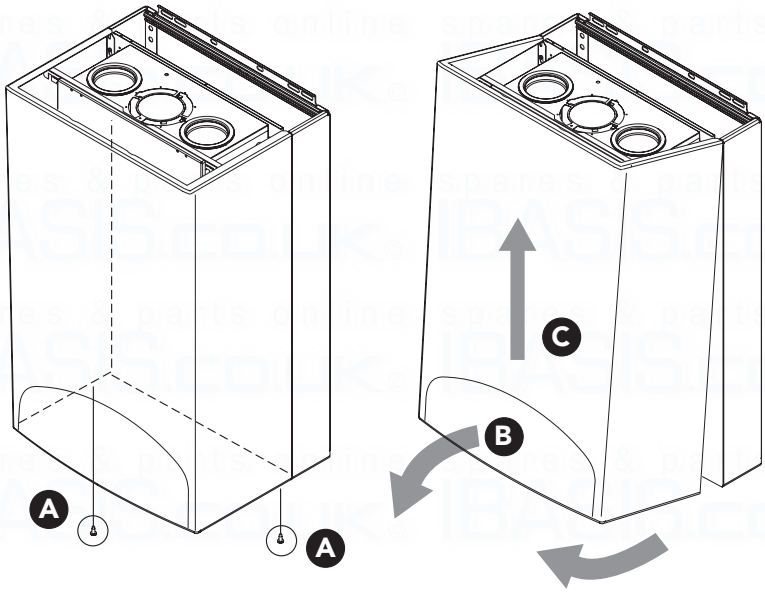

fig. 17

Cleaning the boiler and burner

The body and burner must not be cleaned with chemical products or wire brushes. Special care must be taken over all the sealing systems pertaining to the sealed chamber (gaskets, cable clamps, etc.). In addition, it is necessary to pay attention after performing all these operations to check and carry out all the phases of ignition and thermostat operation, the gas valve and circulation pump.

After these checks, make sure there are no gas leaks.

Combustion analysis

It is possible to analyse the combustion through the air and flue sampling points shown in fig. 18.

To make the measurement, it is necessary to:

1) Open the air and flue sampling points
2) Insert the probe;
3) Press RESET key for 3 times in the 3 seconds to turn on TEST mode;
4) Wait 10 minutes for the boiler to stabilize
5) Take the measurement.
6) CO_2 for Natural gas 8,7 to 9,0%
LPG 9,5 to 10%.

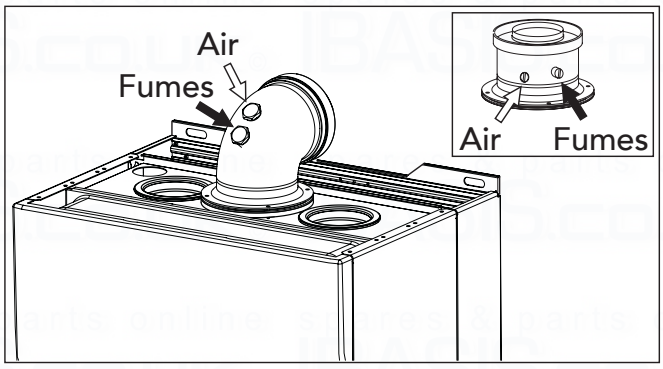

fig. 18

Analyses made with an unstabilized boiler can cause measurement errors.

3.4 Troubleshooting

Fault Diagnosis

In the event of operating problems or trouble, the display blinks and a fault identification code appears.

There are faults that in order to restore operation the RESET button must be pressed or (ref.2 - fig. 1); if the boiler fails to start, it is necessary to resolve the fault (from no. 1 to no. 24). Other faults cause temporary shutdowns that are automatically reset as soon as the value comes back within the boiler's normal working range (faults from 25 to 46).

When the boiler starts functioning normally again, the display stops blinking and the fault code disappears.

Table 6

	Fault	Possible cause	Cure
F1	No burner ignition	• No gas • Detection or ignition electrode fault • Defective gas valve • Incorrect inlet gas pressure • Siphon obstructed	• Check the regular gas flow to the boiler and the air has been purged from the pipes. • Check that the electrodes are correctly positioned and free of any deposits • Check and change the gas valve • Check inlet gas pressure • Check and if necessary change the siphon
F2	flame detected with the burner off	• Ionization electrode defected • Main board defected	• Check the ionizing electrode wiring • Check the card
F3	Safety thermostat trips	• Delivery sensor not active • No system circulation	• Check the correct positioning and operation of the delivery sensor • Check the pump and radiator valves present in the system
F5	Fan problem	• Tachometer signal interrupted • Fan damaged	• Check the wiring • Check the fan
F8	No flame after the ignition phase	• CVBC trouble • Mains interference	• Check and if necessary change the CVBC • Check the earthing
F9	No communication between the electronic unit and the gas valve	• Incorrect wiring • Damaged valve	• Check the wiring • Check the components • Change the valve
F10 ÷ F22	Microprocessor trouble	• Microprocessor operating trouble	• Cut off and restore the electricity supply. If the trouble remains, check and/or change the main CVBC

	Fault	Possible cause	Cure
F25	Software fault	• Software operating fault	• Cut off and restore the electricity supply. If the trouble remains, check and/or change the main CVBC
F26	No flame after the ignition phase (5 times in 4 min.)	• Detection electrode fault • Flame instable • Incorrect gas valve Offset • Flue gas circuit obstructed • Siphon obstructed	• Check that the electrode is correct positioned and is necessary change it • Check the burner • Check Offset at the minimum power • Check if flue gas circuit is free • Clean and if necessary change the siphon
F30	Delivery sensor fault	• Sensor damaged or short circuited	• Check the wiring or change the sensor
F31	Delivery sensor fault	• Sensor damaged or wiring broken	• Check the wiring or change the sensor
F34	Supply voltage under 190V. or over 250V.	• Electric mains trouble	• Check the electrical system
F35	Irregular mains frequency	• Electric mains trouble	• Check the electrical system
F36	Electronic CVBC trouble		• Change the electronic CVBC
F37	Incorrect system water pressure	• Pressure too low • Sensor damaged	• Fill the system • Check the sensor
F43	Return sensor fault	• Sensor damaged or wiring shorted	• Check the wiring or change the sensor
F44	Return sensor fault	• Sensor damaged or wiring broken	• Check the wiring or change the sensor
F45	Flue sensor fault	• Sensor damaged or wiring shorted	• Check the wiring or change the sensor
F46	Flue sensor fault	• Sensor damaged or wiring broken	• Check the wiring or change the sensor

4 TECHNICAL CHARACTERISTICS AND DATA

4.1 Dimensions and connections

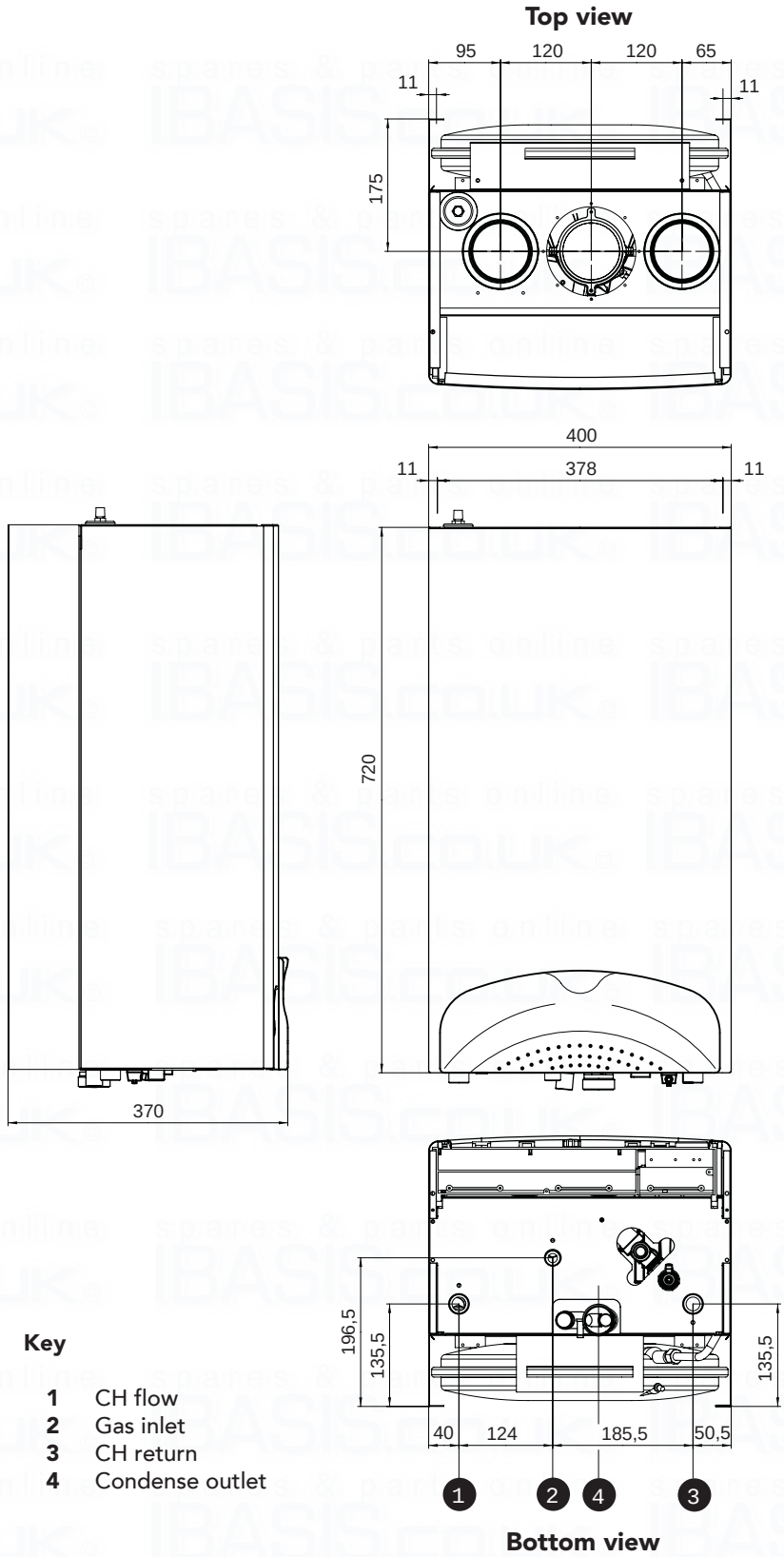

Key

1	CH flow
2	Gas inlet
3	CH return
4	Condense outlet

fig. 19

4.2 General view and main components

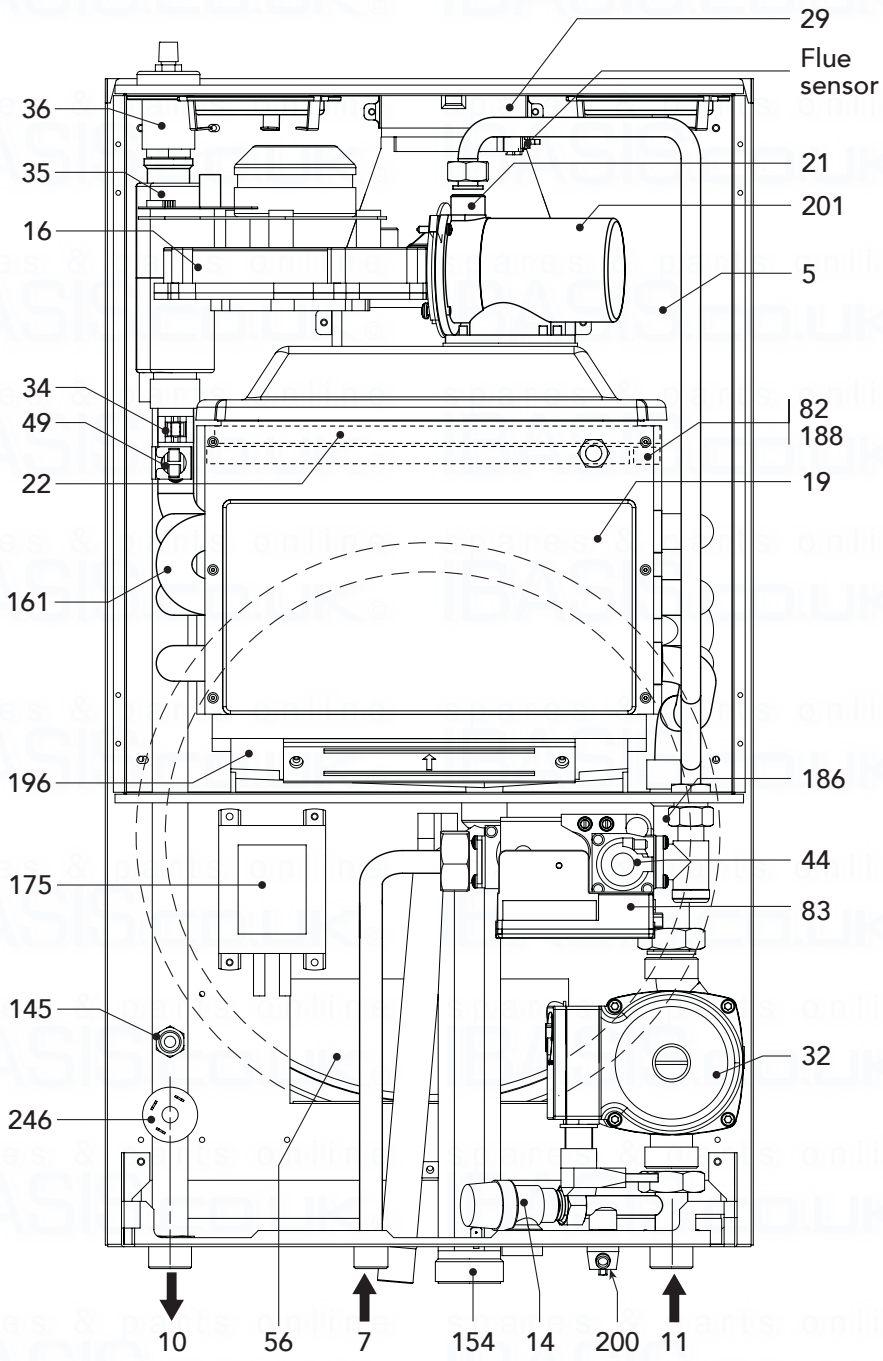

fig. 20

Key

5	Airtight chamber
7	Gas inlet
10	CH flow
11	CH return
14	Safety valve
16	Premix fan
19	Combustion chamber
21	Gas injector
22	Ceramic burner
29	Flue outlet manifold
32	Heating pump
34	Heating flow sensor
35	Air separator
36	Automatic air vent
44	Gas valve
49	Safety thermostat
56	Expansion vessel
82	Ionisation probe
83	Full auto control
145	Pressure gauge connection
154	Condensate outlet pipe
161	Heat exchanger
175	Transformer
186	Return sensor
188	Ignition electrode
196	Condensate collector
201	Fan Venturi
200	System drain off
246	System pressure switch

4.3 Hydraulic diagram

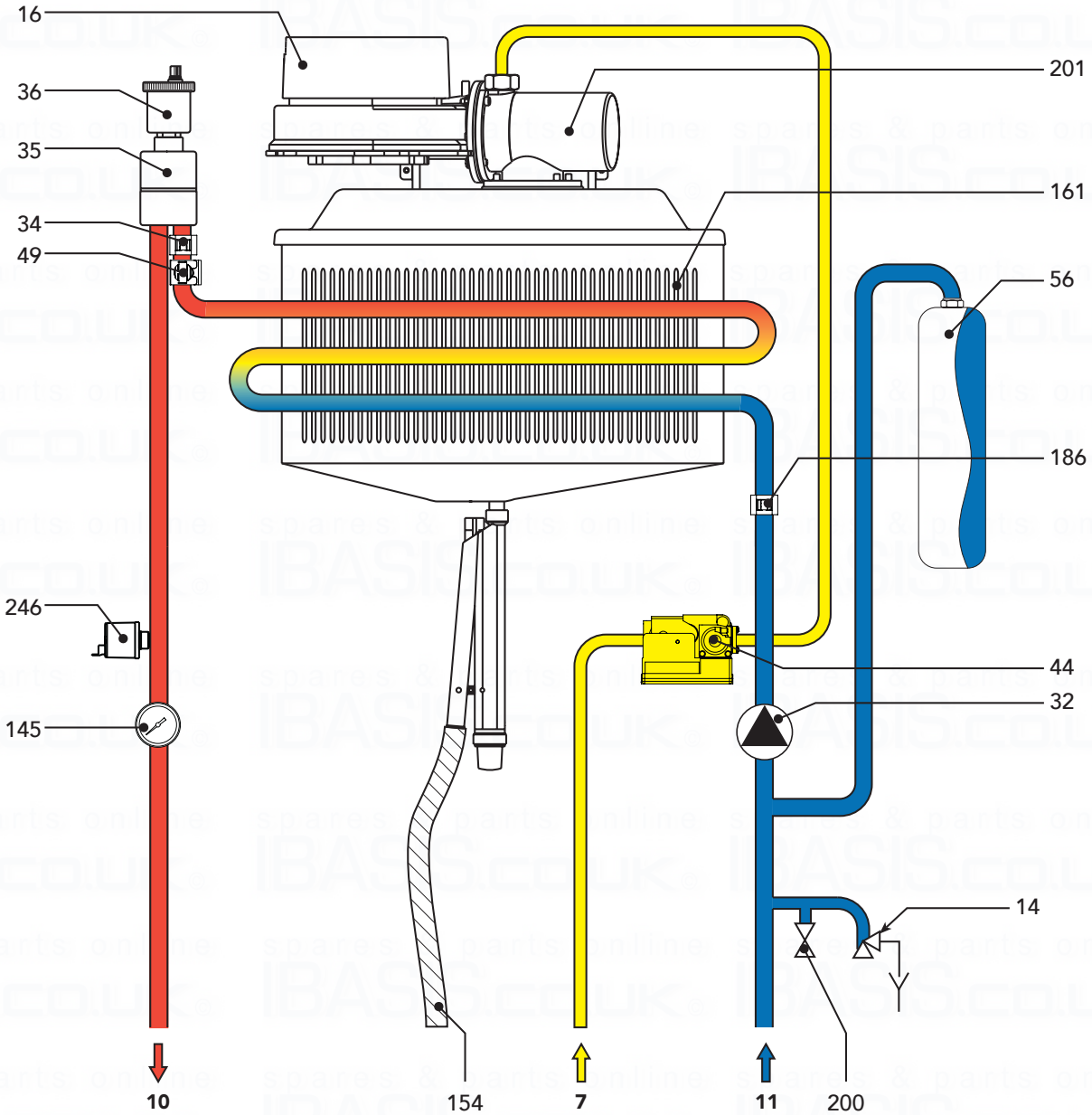

fig. 21

Key

7	Gas inlet	**49**	Safety thermostat
10	CH flow	**56**	Exspansion vessel
11	CH return	**145**	System pressure gauge (water gauge)
14	Heating safety valve	**154**	Condensate outlet pipe
16	Premix fan assembly	**161**	Heat exchanger
32	Heating pump	**186**	Return sensor
34	Flow temperature sensor	**200**	System drain off
35	Air separator	**201**	Fan Venturi
36	Automatic air vent	**246**	System pressure sensor
44	Gas valve		

4.4 Technical data table

Table 7

Powers		Pmax	Pmin
Hi Heating power	kW	25.2	7.5
Useful Heating Power 80° C - 60° C	kW	24.7	7.3
Useful Heating Power 50° C - 30° C	kW	26.4	8.0
Natural Gas delivery (G20)	nm^3/h	2.67	0.79
Natural Gas supply pressure (G20)	mbar	20	20
LPG flow rate (G31)	kg/h	1.96	0.58
LPG supply pressure (G31)	mbar	37	37
Combustion		**Pmax**	**Pmin**
CO2 (G20 - Natural Gas)	%	9	8.7
Gas nozzle (G20 - Natural Gas)	Ø mm	5.4	
CO2 (G31 - Propane)	%	10	9.5
Gas nozzle (G31 - Propane)	Ø mm	4.0	
Flue temperature 80° C-60° C	°C	65	60
Flue temperature 50° C-30° C	°C	46	31
Flue flow rate	kg/h	43	13
Quantity of condensate	kg/h	3.3	1.4
pH of condensation water	pH	4,1	
Energy marking (92/42 EEC directive)		★★★★	
NOx emission class		5	
Heating			
Heating temperature adjustment range	°C	30 - 90	
Maximum working pressure in heating	bar	3	
Minimum working pressure in heating	bar	0.8	
Expansion tank capacity	litres	8	
Expansion tank pre-filling pressure	bar	1	
Total boiler water content	litres	1.7	
Dimensions, weights connections			
Height	mm	720	
Width	mm	400	
Depth	mm	358	
Weight with no load	kg	43	
Gas system connection (with isolation valve fitted)	mm	22	
Heating system connections (with isolation valve fitted)	mm	22	
Maximum length of separate flues D=80* (*Measurement given in equivalent linear metres – cfr FERROLI calculation system)	m_{eq}	75	
Electrical power supply			
Max electrical power absorbed	W	130	
Electric power drawn by the circulator (Speed I-II-III)	W	40-65-90	

4.5 Diagrams

Head available for the system

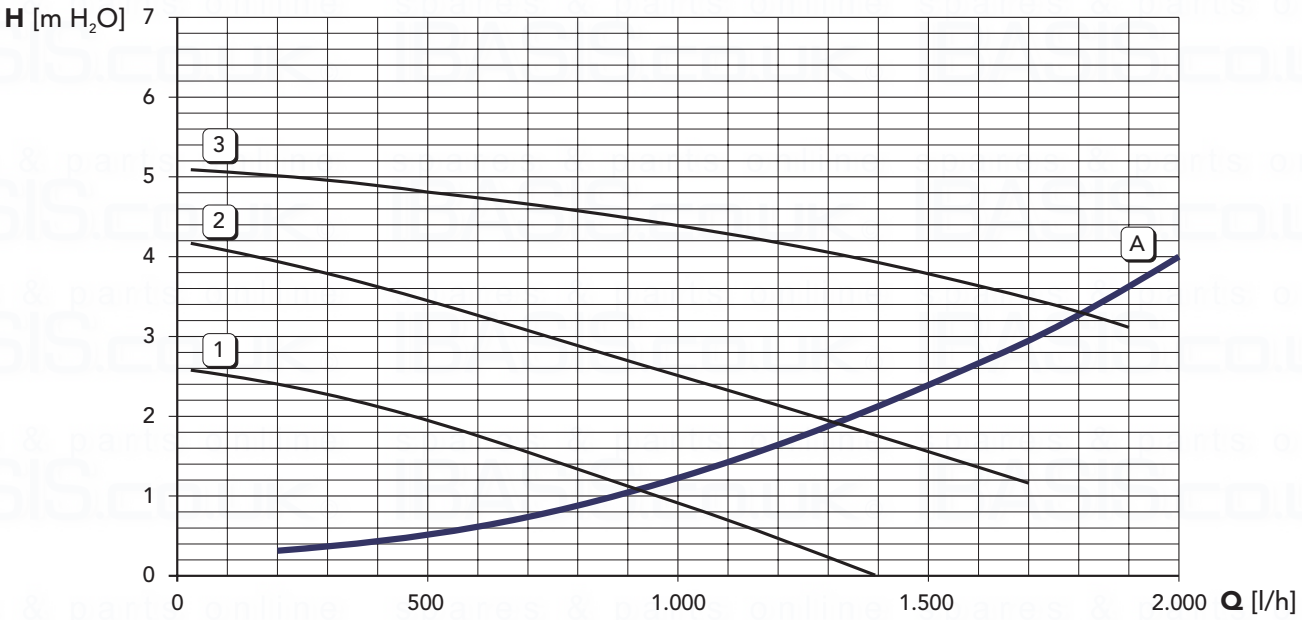

fig. 22

Key

1 - 2 - 3 = Pump selector positions
A = Boiler losses of head

4.6 Wiring diagram

Key

16	Fan
32	Central heating pump
34	C.h. flow temperature sensor
44	Combination gas valve
49	Overheat cut-off thermostat
81	Spark electrode
82	Ionisation electrode
114	Water pressure switch
186	Return sensor
191	Flue temperature sensor

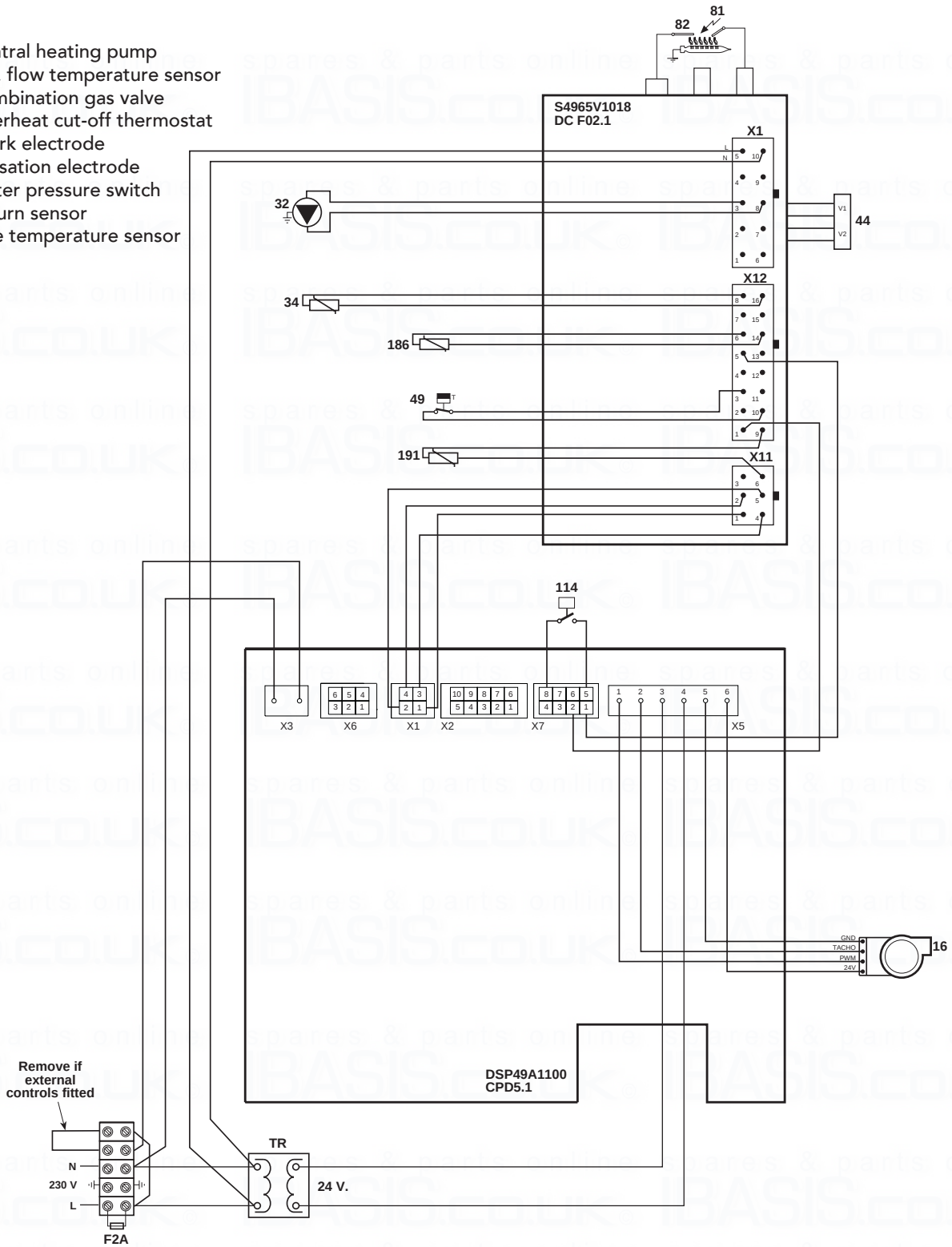

fig. 23

BENCHMARK No. 2 6 7 _ _ _ _

Please add the first 4 digits of the Boiler serial No to complete the BENCHMARK No.

benchmark™ COLLECTIVE MARK

GAS BOILER COMMISSIONING CHECKLIST

BOILER SERIAL No. _____ **NOTIFICATION No.** _____

CONTROLS *To comply with the Building Regulations, each section must have a tick in one or other of the boxes*

TIME & TEMPERATURE CONTROL TO HEATING	ROOM T/STAT & PROGRAMMER/TIMER	☐	PROGRAMMABLE ROOMSTAT	☐
TIME & TEMPERATURE CONTROL TO HOT WATER	CYLINDER T/STAT & PROGRAMMER/TIMER	☐	COMBI BOILER	☐
HEATING ZONE VALVES	FITTED	☐	NOT REQUIRED	☐
HOT WATER ZONE VALVES	FITTED	☐	NOT REQUIRED	☐
THERMOSTATIC RADIATOR VALVES	FITTED	☐		
AUTOMATIC BYPASS TO SYSTEM	FITTED	☐	NOT REQUIRED	☐

FOR ALL BOILERS CONFIRM THE FOLLOWING

THE SYSTEM HAS BEEN FLUSHED IN ACCORDANCE WITH THE BOILER MANUFACTURER'S INSTRUCTIONS? ☐

THE SYSTEM CLEANER USED

THE INHIBITOR USED

FOR THE CENTRAL HEATING MODE, MEASURE & RECORD

GAS RATE		m^3/hr		ft^3/hr
BURNER OPERATING PRESSURE (IF APPLICABLE)	☐	N/A		mbar
CENTRAL HEATING FLOW TEMPERATURE				°C
CENTRAL HEATING RETURN TEMPERATURE				°C

FOR COMBINATION BOILERS ONLY

HAS A WATER SCALE REDUCER BEEN FITTED? YES ☐ NO ☐

WHAT TYPE OF SCALE REDUCER HAS BEEN FITTED?

FOR THE DOMESTIC HOT WATER MODE, MEASURE & RECORD

GAS RATE		m^3/hr		ft^3/hr
MAXIMUM BURNER OPERATING PRESSURE (IF APPLICABLE)	☐	N/A		mbar
COLD WATER INLET TEMPERATURE				°C
HOT WATER OUTLET TEMPERATURE				°C
WATER FLOW RATE				lts/min

FOR CONDENSING BOILERS ONLY CONFIRM THE FOLLOWING

THE CONDENSATE DRAIN HAS BEEN INSTALLED IN ACCORDANCE WITH THE MANUFACTURER'S INSTRUCTIONS? YES ☐

FOR ALL INSTALLATIONS CONFIRM THE FOLLOWING

THE HEATING AND HOT WATER SYSTEM COMPLIES WITH CURRENT BUILDING REGULATIONS ☐

THE APPLIANCE AND ASSOCIATED EQUIPMENT HAS BEEN INSTALLED AND COMMISSIONED IN ACCORDANCE WITH THE MANUFACTURER'S INSTRUCTIONS ☐

IF REQUIRED BY THE MANUFACTURER, HAVE YOU RECORDED A CO/CO_2 RATIO READING? N/A ☐ YES _____ CO/CO_2 RATIO

THE OPERATION OF THE APPLIANCE AND SYSTEM CONTROLS HAVE BEEN DEMONSTRATED TO THE CUSTOMER ☐

THE MANUFACTURER'S LITERATURE HAS BEEN LEFT WITH THE CUSTOMER ☐

COMMISSIONING ENG'S NAME PRINT _____ CORGI ID No. _____

SIGN _____ DATE _____

SERVICE INTERVAL RECORD

It is recommended that your heating system is serviced regularly
and that you complete the appropriate Service Interval Record Below.

Service Provider. Before completing the appropriate Service Interval Record below, please ensure you have carried out the service as described in the boiler manufacturer's instructions. Always use the manufacturer's specified spare part when replacing all controls

SERVICE 1 DATE
ENGINEER NAME
COMPANY NAME
TEL No.
CORGI ID CARD SERIAL No.
COMMENTS
SIGNATURE

SERVICE 2 DATE
ENGINEER NAME
COMPANY NAME
TEL No.
CORGI ID CARD SERIAL No.
COMMENTS
SIGNATURE

SERVICE 3 DATE
ENGINEER NAME
COMPANY NAME
TEL No.
CORGI ID CARD SERIAL No.
COMMENTS
SIGNATURE

SERVICE 4 DATE
ENGINEER NAME
COMPANY NAME
TEL No.
CORGI ID CARD SERIAL No.
COMMENTS
SIGNATURE

SERVICE 5 DATE
ENGINEER NAME
COMPANY NAME
TEL No.
CORGI ID CARD SERIAL No.
COMMENTS
SIGNATURE

SERVICE 6 DATE
ENGINEER NAME
COMPANY NAME
TEL No.
CORGI ID CARD SERIAL No.
COMMENTS
SIGNATURE

SERVICE 7 DATE
ENGINEER NAME
COMPANY NAME
TEL No.
CORGI ID CARD SERIAL No.
COMMENTS
SIGNATURE

SERVICE 8 DATE
ENGINEER NAME
COMPANY NAME
TEL No.
CORGI ID CARD SERIAL No.
COMMENTS
SIGNATURE

SERVICE 9 DATE
ENGINEER NAME
COMPANY NAME
TEL No.
CORGI ID CARD SERIAL No.
COMMENTS
SIGNATURE

SERVICE 10 DATE
ENGINEER NAME
COMPANY NAME
TEL No.
CORGI ID CARD SERIAL No.
COMMENTS
SIGNATURE

FERROLI TECHNICAL HELPLINE - 08707 282 885

Should you require help during installation
call our Technical Helpline on
08707 282 885 option 1
To book a Ferroli service engineer
call Ferroli caresafe on
08707 282 885 option 2

Phone numbers:

Installer _____

Service Engineer _____

BECAUSE OF OUR CONSTANT ENDEAVOUR FOR IMPROVEMENT DETAILS MAY VARY SLIGHTLY FROM THOSE QUOTED IN THESE INSTRUCTIONS.

ALL SPECIFICATIONS SUBJECT TO CHANGE

Please note - to avoid incurring unnecessary expense, in the event of a boiler shut down, check this is not caused by lack of electricity supply, gas supply or low water pressure before calling our Customer Service Helpline.

Lichfield Road, Branston Industrial Estate, Burton Upon Trent, Staffordshire DE14 3HD
Tel. 08707 282 885 - Fax 08707 282 886