Ferroli

GRUPPO FERROLI

OPTIMAX HE PLUS 18 OV

wall-mounted gas fired,
pre-mix
condensing gas boiler

ISO 9001 : 2000
CERTIFIED COMPANY

TÜV SÜD

cod. 3540M164 - 02/2009 (Rev. 00)

CE

INSTRUCTIONS FOR USE INSTALLATION AND MAINTENANCE

G C N° 47-267-34

IMPORTANT

- **Your "benchmark" Installation, Commissioning and Service Record Log Book is enclosed in the last pages of this manual. "This record must be completed and left with the end user".**
  Ferroli is a member of the Benchmark initiative and fully supports the aims of the programme. Benchmark has been introduced to improve the standards of installation and commissioning of central heating systems in the UK and to encourage the regular servicing of all central heating systems to ensure safety and efficiency. Please see installation and servicing guidelines.
- **"Ferroli declare that no substances harmful to health are contained in the appliance or used during the appliance manufacture".**

⚠	This symbol indicates **"Caution"** and is placed next to all safety information. Strictly follow these instructions in order to avoid danger and damage to persons, or property.
☞	This symbols calls attention to a note or important information, please read thoroughly.

⚠

- Read the warnings given in this manual thoroughly. They provide important information for safe installation, use and maintenance
- By law the instruction manual must be left with the end user.
- If the appliance is sold or transferred to another owner or if the owner moves, leaving the appliance behind, always ensure that the manual is kept with the appliance for consultation by the new owner and /or installer.
- Incorrect installation or poor maintenance absolves the manufacturer from all liability for damage to people or property.
- Installation and maintenance must be carried out in conformity with current legislation, according to the manufacturer's instructions and by qualified personnel.
- Before service or maintenance work is, carried out isolate the appliance from the mains electricity supply.
- In the event of malfunction or faulty operation, isolate the appliance. Do not attempt to repair or carry out any other operation on the appliance directly. Contact qualified personnel only.
- Repairs or the replacement of components must be carried out exclusively by qualified personnel using original spare parts only. Failure to respect the above may compromise the safety of the appliance.
- To guarantee efficient operation, the appliance must be serviced once a year by a corgi registered engineer.
- The appliance may not be used for purposes other than those for which it was explicitly designed. Any other use is considered improper and therefore dangerous.
- Incorrect installation and use or failure to follow the instructions provided by the manufacturer absolve the manufacturer from all liability for damage.
- After unpacking, check that the contents are complete and undamaged.
- Keep the packaging out of reach of children as it is potentially hazardous.
- To clean external parts, use a damp cloth moistened with soapy water if necessary. Avoid using abrasive cleaning products and solvents.

Declaration of conformity

CE

Manufacturer: FERROLI S.p.A.
Address: Via Ritonda 78/a 37047 San Bonifacio VR Italy
declares that this unit complies with the following EU directives:

- Gas Appliance Directive 90/396
- Efficiency Directive 92/42
- Low Voltage Directive 73/23 (amended by 93/68)
- Electromagnetic Compatibility Directive 89/336 (amended by 93/68)

President and Legal Representative
Cav. del Lavoro
Dante Ferroli

1. OPERATING INSTRUCTIONS 4

1.1 Introduction 4
1.2 Control panel 5
1.3 Turning ON and OFF 6
1.4 Adjustments 7
1.5 Maintenance 8
1.6 Faults 8

2. INSTALLATION 9

2.1 General Instructions 9
2.2 Boiler location 10
2.3 Boiler water connections 11
2.4 Connection to the gas system 14
2.5 Electrical Connections 14
2.6 Flue system 17
2.7 Condensate outlet connection 23

3. SERVICE AND MAINTENANCE 25

3.1 Adjustments 25
3.2 System start-up 26
3.3 Maintenance 27
3.4 Troubleshooting 29

4. TECHNICAL CHARACTERISTICS AND DATA 31

4.1 Dimensions and connections 31
4.2 General view and main components 32
4.3 Hydraulic diagram 33
4.4 Technical data table 34
4.5 Wiring diagram 35

BENCHMARK 36

1. OPERATING INSTRUCTIONS

1.1 Introduction

Dear Customer,

Thank you for choosing **OPTIMAX HE PLUS 18 OV**, a FERROLI wall-mounted boiler of the latest generation, featuring advanced design and cutting-edge technology.

OPTIMAX HE PLUS 18 OV is a high-efficiency **condensing pre-mix** appliance for heating with extremely low emissions, running on natural gas or LPG.

The boiler consists of an aluminium laminar heat exchanger providing effective condensation of the water vapour contained in the flue gases, permitting extremely high efficiency.

Above the heat exchanger, in the boiler, there is a ceramic surface pre-mix burner, equipped with electronic ignition and ionization flame control, which achieves extremely low emissions while ensuring high reliability and long life operation.

The boiler is totally room sealed from the installation room: the air needed for combustion is drawn from outside. The boiler also includes a modulating speed fan, modulating gas valve, safety valve, temperature sensors, a safety thermostat and a flue gas sensor.

Thanks to the twin microprocessor control and adjustment system with advanced self-diagnosis, unit operation is for the most part automatic. The power for heating is automatically governed by the control system.

The user only has to set the temperature desired inside the home (by means of a room thermostat and or regulate the temperature of the system). The adjustment and control system will provide optimum operation throughout the year.

The display continuously provides information on the unit's operating status and it is easily possible to obtain additional information on the sensor temperatures, set-points, etc. or configure them. Any operating problems associated with the boiler or system is immediately signalled by the display and, if possible, corrected automatically.

1.2 Control panel

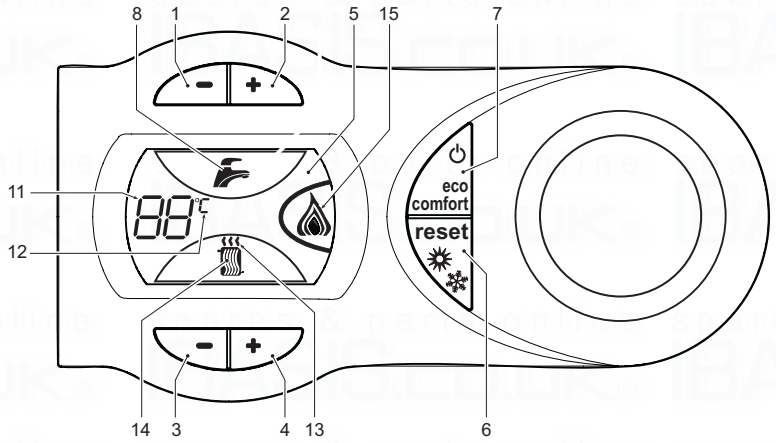

fig. 1

1 = Domestic Hot Water temperature setpoint decreasing push button (not used)
2 = Domestic Hot Water temperature setpoint increasing push button (not used)
3 = Central Heating water temperature setpoint decreasing push button
4 = Central Heating water temperature setpoint increasing push button
5 = Display LCD
6 = Reset
7 = On-Off push button
8 = Domestic Hot Water symbol
11 = Multi-function indication
12 = Degrees indication
13 = Central Heating mode operation
14 = Central Heating symbol
15 = Burner on and actual load indication

Indication during boiler operation

Demand mode

The Boiler heat demand (generated by the Programmer, room thermostat and cylinder thermostat) is indicated by the flashing of the Hot Air symbol over the radiator (part. 13 and 14 – fig. 1). The display (part. 11 – fig. 1) indicates the actual System water temperature and, during the delay time, the text "d2".

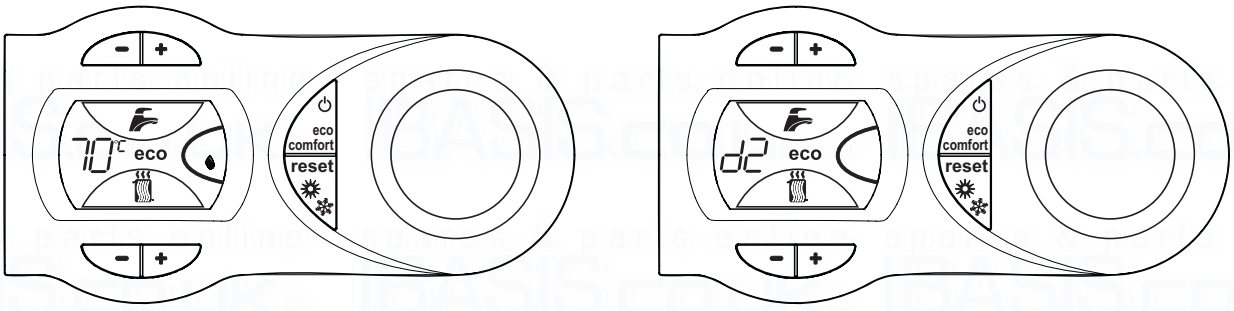

fig. 2

1.3 Turning ON and OFF

Without main power supply

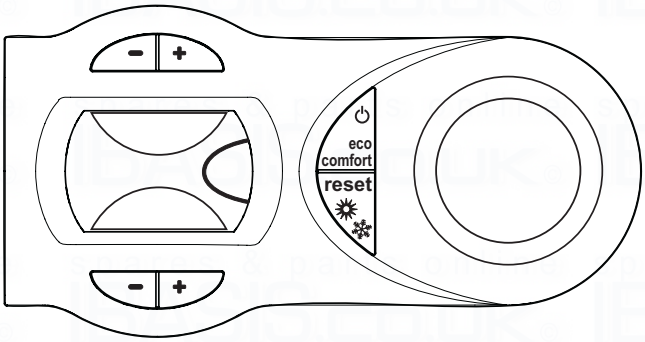

fig. 3 - Boiler without main power supply

⚠ To avoid damage caused by freezing during long shutdowns in winter, it is advisable to drain all water from the system.

Ignition

Ensure the power is on to the appliance.

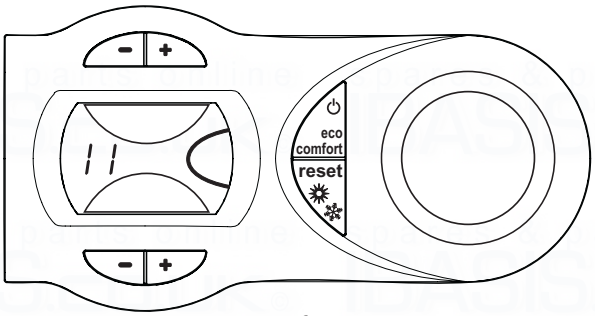

fig. 4 - Ignition

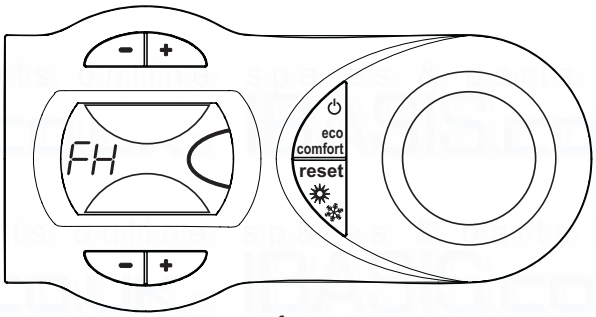

fig. 5 - Air purge

- For the first 120 seconds, the display shows FH that identifies the Air purge function.
- During the first 5 seconds, the display shows the software version of the pcb.
- Open the gas cock on the boiler and purge the air from the pipework upstream of the gas valve.
- When the FH disappears, the boiler is ready to function automatically whenever the external controls are calling for heat.

Turning off

Press the (part. 7 - fig. 1) for 5 seconds.

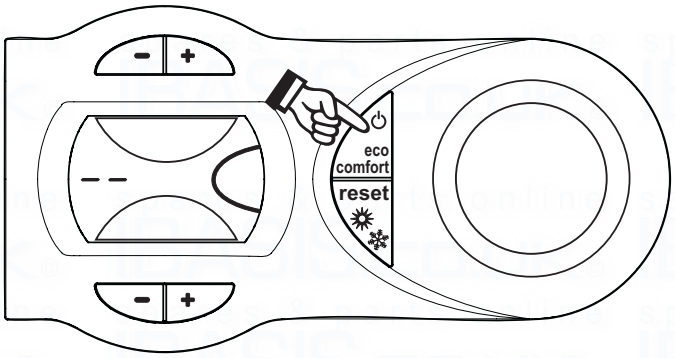

fig. 6 - Turning off

When the boiler is turned off with this key, the p.c.b is still powered, heating operation is disabled and the display is off however the frost protection will still be active.

To totally isolate close the gas cock ahead of the boiler and disconnect electrical power.

To avoid damage caused by freezing during long shutdowns in winter, it is advisable to drain all water from the system.

To turn the boiler on again, press (part.7 - fig.1) for 5 seconds.

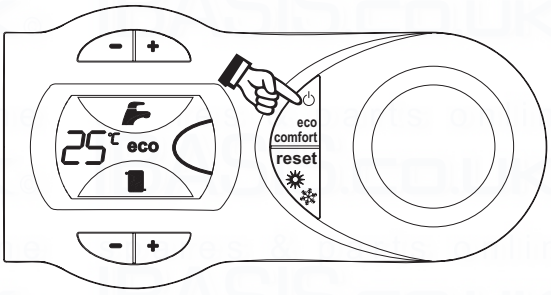

fig. 7

The boiler is ready to function automatically whenever the external controls are calling for heat.

1.4 Adjustments

Heating temperature setting

To set the system flow temperature, use the CH push buttons (Part. 3 and 4 – fig. 1). It can be varied from a minimum of 20°C to a maximum of 90°C.

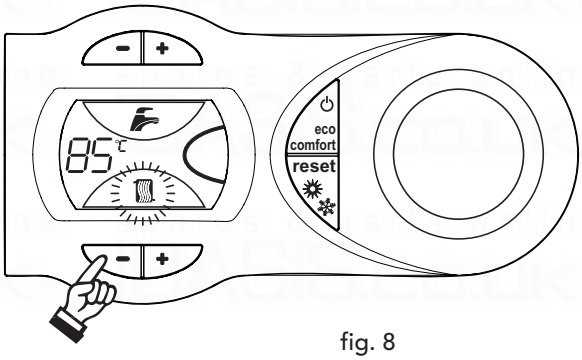

fig. 8

Room temperature adjustment (using a room thermostat)

Using the room thermostat, set the temperature desired in the rooms. Controlled by the room thermostat, the boiler lights and heats the system water to the system delivery setpoint temperature. The burner shuts down when the desired temperature in the room is reached.

A room thermostat and programmer are a mandatory requirement (Building regulations Doc 'L' 2002).

1.5 Maintenance

It is strongly recommended to carry out annual maintenance of the boiler and heating system. Please refer to the "maintenance" section in this manual.

The casing, the control panel and the aesthetic parts of the boiler can be cleaned using a soft and damp cloth, **do not use abrasives or solvents.**

1.6 Faults

In the unlikely event of an operating problem, or component failure, the display flashes and a fault identification code appears.

The boiler is equipped with an advanced self-diagnosis system that signals any faults on the display. Some faults ("A" indication) cause a boiler shutdown. In this case, operation must be reset manually by pressing the reset (Part. 6 – fig. 1) for 1 second.

Other faults ("F" indication) cause temporary shutdowns that are automatically reset as soon as the value causing the fault comes back within the boiler's normal working range.

Listed below are some anomalies that can be caused by simple, user-solvable problems.

If the problem remains after two attempts at resetting, contact the Ferroli Service Centre.

For other faults, refer to section 3.4 "Troubleshooting".

	Fault	Cure
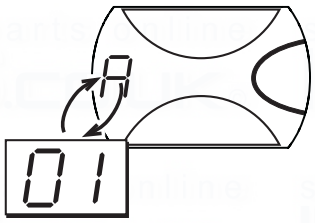	**No burner ignition**	Make sure that the gas cocks ahead of the boiler and on the meter are open. Press the RESET button (for 1 second). In case of repeated shutdowns, contact the Ferroli Service Department.

☞ Before calling a Ferroli service engineer, check that the problem is not due to there being no gas or electricity.

2. INSTALLATION

2.1 General Instructions

This device must only be used for the purpose for which it is specially designed. This unit is designed to heat water to a temperature below boiling point and must be connected to a heating system and/or a water supply system for domestic use, compatible with its performance, characteristics and its heating capacity. Any other use is considered improper.

BOILER INSTALLATION MUST ONLY BE PERFORMED BY QUALIFIED PERSONNEL, IN ACCORDANCE WITH ALL THE INSTRUCTIONS GIVEN IN THIS TECHNICAL MANUAL, THE PROVISIONS OF CURRENT LAW, THE RECOMENDATION OF BS STANDARDS, ANY LOCAL REGULATIONS AND THE RULES OF COMPETENT WORKMANSHIP.

Incorrect installation can cause damage or physical injury for which the manufacturer declines any responsibility.

This appliance must be installed strictly in accordance with these instructions and regulations:

The Gas Safety Regulations (Installations & Use).
The Local Building Regulations.
The Building Regulations (Part L).
The Buildings Standards (Scotland - Consolidated) Regulations.
British Standards Codes of Practice:

B.S. 5440 Part 1 Flues
B.S. 5440 Part 2 Air supply
B.S. 5449 FORCED CIRCULATION HOT WATER SYSTEMS
B.S. 6798 INSTALLATION OF GAS FIRED HOT WATER BOILERS
B.S. 6891 GAS INSTALLATIONS
B.S. 7671 IEE WIRING REGULATIONS
B.S. 4814 SPECIFICATION FOR EXPANSION VESSELS
B.S. 5482 INSTALLATION OF LPG
B.S. 7593 TREATMENT OF WATER IN DOMESTIC HOT WATER CENTRAL HEATING SYSTEMS
B.S. 5546 INSTALLATION OF HOT WATER SUPPLIES FOR DOMESTIC PURPOSES

Model Water Bye Laws
B.S. 5955-8 PLASTIC PIPEWORK INSTALLATION

For Northern Ireland the rules in force apply

2.2 Boiler location

The unit's combustion chamber is sealed off from the installation room and therefore requires no compartment ventilation.

The installation room must be sufficiently well ventilated to prevent any dangerous conditions from forming in the event of even slight gas leakage. This safety standard is required by the EEC Directive no. 90/396 for all gas units, including those with a so-called sealed chamber.

Therefore the place of installation must be free of dust, flammable materials or objects or corrosive gases. The room must be dry and not subject to freezing.

The boiler is designed to be installed on a solid wall. The wall fixing must ensure a stable and effective support for the appliance, using the bracket and fixings supplied.

If the unit is enclosed in a cupboard or mounted alongside, there must be space for normal maintenance work. Fig. 9 and tab. 1 give the minimum clearances to leave around the unit.

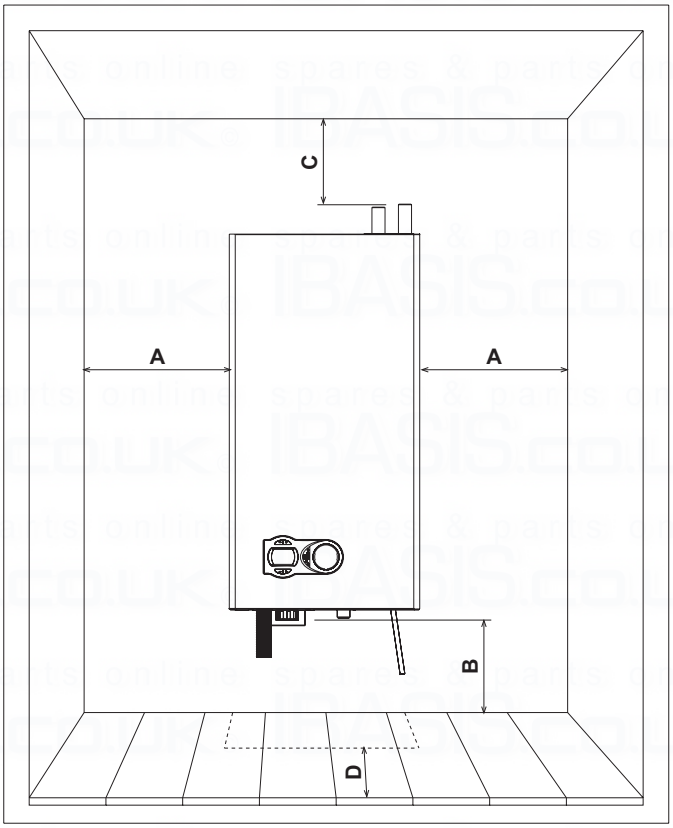

fig. 9

Table 1

	Minimum
A	2,5 cm
B	20 cm
C	30 cm
D	60 cm (via an openable panel)

Safe Handling of Substances

Care should be taken when handling the boiler insulation panels, which can cause irritation to the skin. No asbestos, mercury or CFCs are included in any part of the boiler.

Product Handling Advice

When handling or lifting always use safe techniques - keep your back straight, bend your knees, don't twist - move your feet, avoid bending forwards and sideways and keep the load as close to your body as possible.

Where possible transport the boiler using a sack truck or other suitable trolley.

Always grip the boiler firmly, and before lifting feel where the weight is concentrated to establish the centre of gravity, repositioning yourself as necessary.

2.3 Boiler water connections

The heating capacity of the unit should be previously established by calculating the building's heat requirement according to current regulations. For good operation and long life of the boiler, the plumbing system must be well proportioned and always complete with all those accessories that guarantee regular operation and running, room thermostat, trv's etc. The flow and return must be a minimum diameter of 22mm for the first 3 metres from the appliance.

If the flow and return pipes follow a path where air pockets could form in certain places, it is essential to install vent valves at these points. Also, install type "A" drain cock device at the lowest points in the system to allow complete draining.

The temperature differential between the flow manifold and the return to the boiler should not exceed 20° C.

A minimum flow of 6 litres/min is required through the heat exchanger, calibrated on site. An automatic by-pass must be fitted to the system.

⚠ Do not use the water system pipes to earth electrical appliances.

Before installation, carefully flush all the pipes of the heating system to remove residues or impurities that could affect the unit's operation (BS 7593 Building regs Doc L).

Make the connections to the appliance as shown in fig. 10.

Key

1 System flow (22 mm compression union)
3 Gas inlet (22 mm with isolation valve fitted)
5 System return - 22 mm compression union)

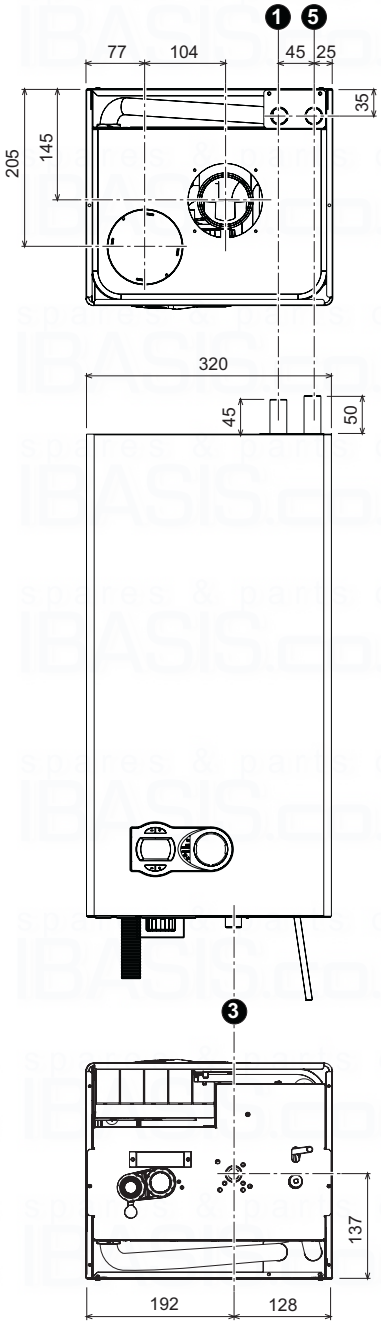

fig. 10

⚠ Make the boiler connection in such a way that its internal pipes are free of stress.

The connecting kits shown in fig. 4 are supplied as standard.

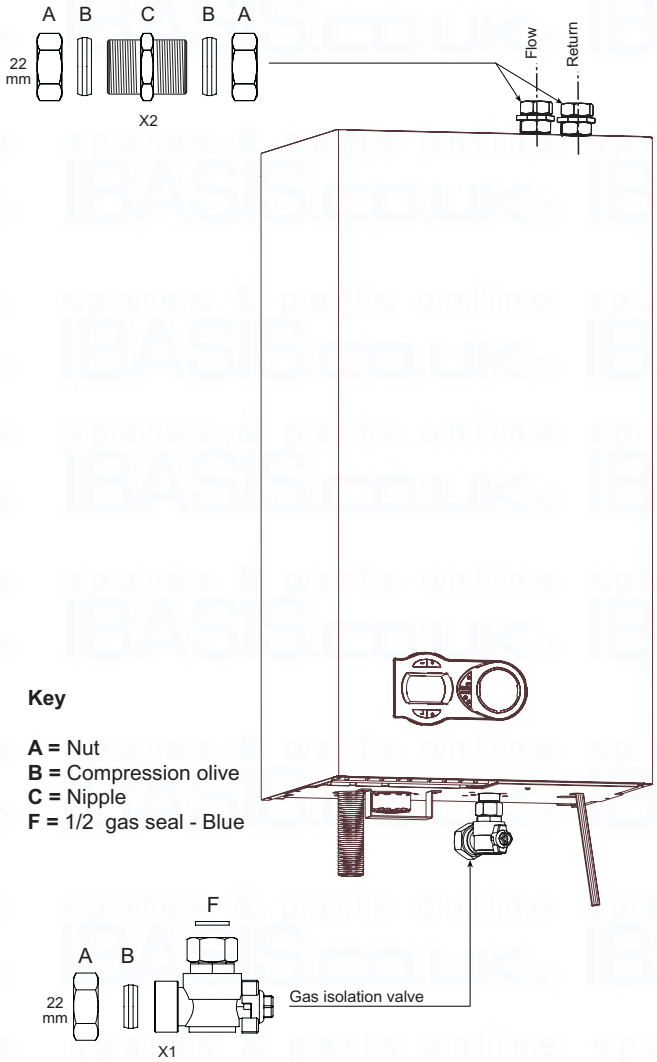

fig. 11

Make Up Water

This appliance is designed to work on an open vented fully pumped heating system only, (see fig 12 page 13). The make up of water must be made via a suitably sized cold feed and expansion tank installed to the current regulations.

This appliance is not suitable for gravity type installations or primatic type cylinders only indirect ones should be used.

The system must be fully pumped due to the complex design of the Aluminium Laminar heat exchangers high efficiency design.

Attention - is drawn to the Model Water Byelaws.

Fittings manufactured from duplex (alpha-beta) brass are not acceptable for underground use and certain water undertakings will not accept their use above ground.

Schematic layout for fully pumped heating and hot water. (Close couple)

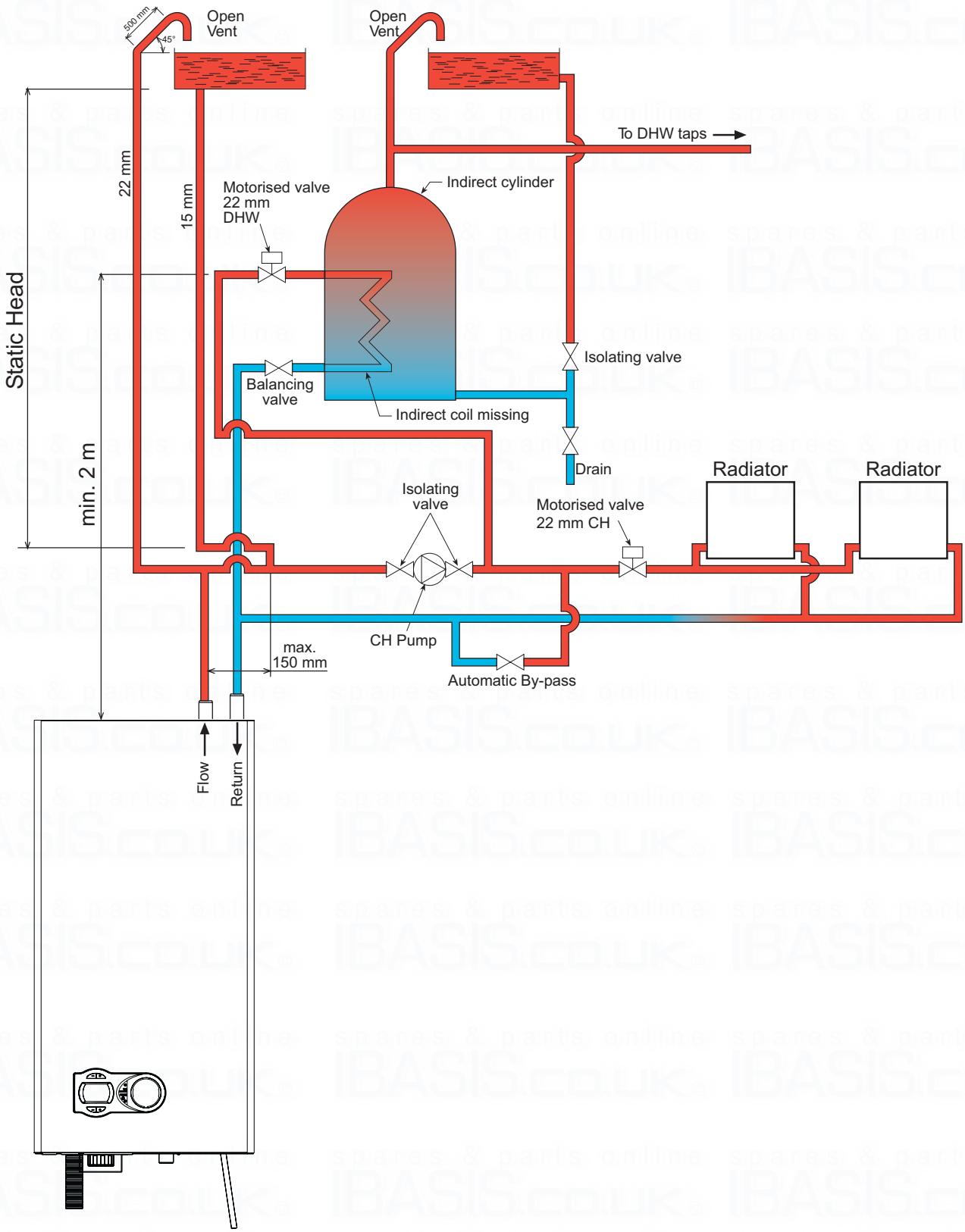

Fig. 12

Water treatment

If treatment is used ferroli limited recommended only the use of Fernox or Sentinel water treatment products, which must be used in accordance with the manufactures instructions. for further information contact:

Fernox Manufacturing Co. LTD.	Sentinel Performance Solutions Ltd
Cookson Electronics, Forsyth Road	The Heath Business & Technical Park
Sheerwater, Woking, surrey, GU21 5RZ	Runcorn, Cheshire WA7 4QX
Tel: 0870 8700362	Tel: 01928 588331

Note - If the boiler is installed on an existing system any unsuitable additives must be removed by thorough cleansing. All systems should be cleansed according to B.S. 7593.

Note - In hard water areas treatment to prevent lime scale may be necessary.

Note - It is important that the correct concentration of the water treatment product is maintained in accordance with the manufacturers instructions.

2.4 Connection to the gas system

If necessary the local Gas supplier should be consulted, at the installation planning stage, in order to establish the availability of an adequate supply of gas.

An existing service pipe must **not** be used without prior consultation with the local Gas supplier.

A gas meter can only be connected by the Local Gas supplier, or by a Local Gas suppliers Contractor.

Installation pipes should be fitted in accordance with BS6891.

Appliance inlet **working pressure** must be 20mbar MINIMUM, for NG and 37 mbar minimum for LPG. Do not use pipes of a smaller size than the boiler inlet gas connection (22 mm).

⚠ The complete installation must be tested for gas soundness and purged as described in BS689. All pipework must be adquately supported. An isolating gas valve is provided and should be fitted on the boiler gas inlet. Please wait 10 minutes when lighting from cold before checking gas rate. Gas pressures should be checked after the boiler has operated for 10 minutes to reach thermal equilibrium. This appliance has no facility to check the burner pressure and the gas valve is sealed and should not be adjusted. A combustion test can be carried out (see page 28 combustion analyser testing).

⚠ The isolation kit shown in Fig. 11 is supplied as standard.

2.5 Electrical Connections

The unit must be installed in conformity with current national and local regulations.

Connection to the electrical Supply

The boiler must be connected to a single-phase, 230 Volt-50 Hz electric supply.

⚠ The unit's electrical safety is only guaranteed when correctly connected to an efficient earthing system executed according to current safety standards. Have the efficiency and suitability of the earthing system checked by professionally qualified personnel. The manufacturer is not responsible for any damage caused by failure to earth the system. Also make sure that the electrical system is adequate for the maximum power absorbed by the unit, as specified on the boiler dataplate, in particular ensuring that the cross sectional area of the system's cables is suitable for the power absorbed by the unit.

The boiler is prewired and provided with a cable and fitted with a 3 amp plug for connection to the electricity supply.

The user must never change the unit's power cable. If the cable gets damaged, switch off the unit and have it changed only by professionally qualified personnel. If changing the electric power cable, use only **"HAR H05 VV-F"** 3x0.75 mm^2 cable with a maximum outside diameter of 8 mm.

Access to the electrical terminal block

Follow the instructions given in fig. 13 to access the electrical connection terminal block. The layout of the terminals for the various connections is given in the wiring diagram in the Technical Data chapter.

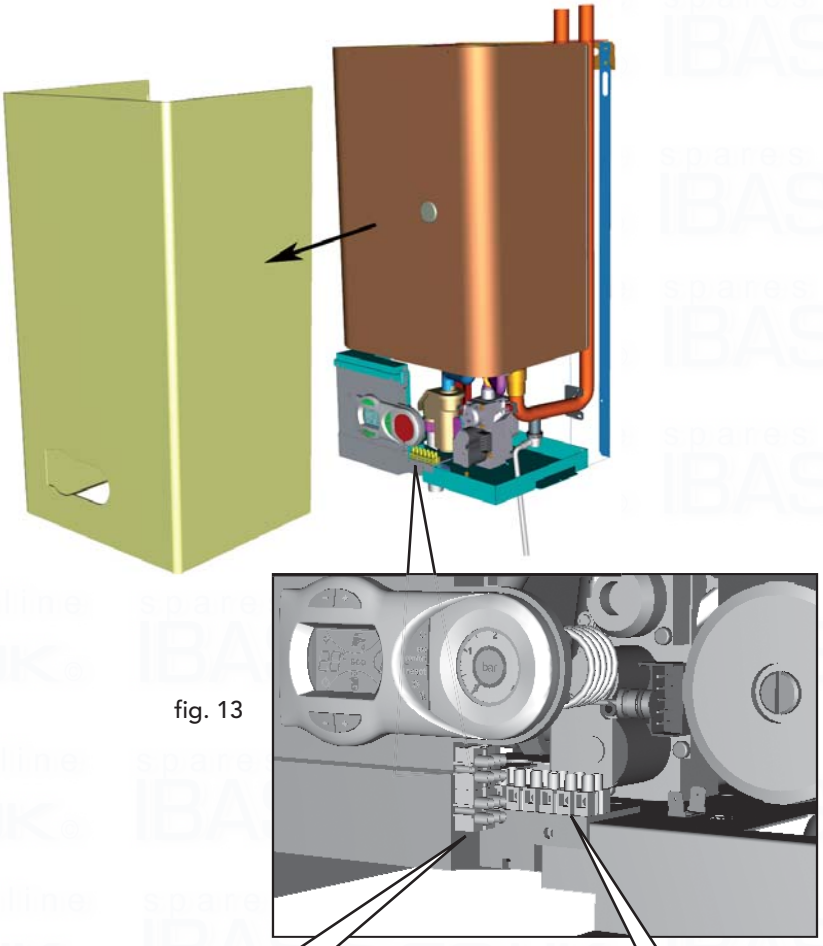

fig. 13

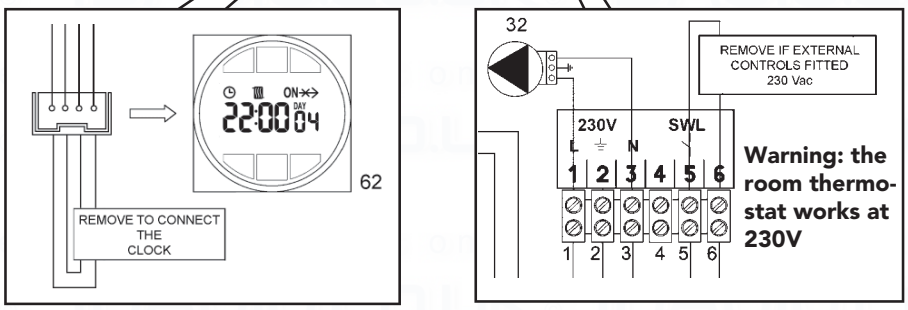

fig. 14

Key

62 Time Clock (optional)

Room thermostat

Remove connections 5 - 6 if external control fitted.
If using external controls the switched line can be connected into terminal 5 of the electrical block (see fig 15 and 16).

Central heating Demand

The heat demand can be controlled by the room thermostat (terminal 5-6) or by a switch line 230 V (terminal 5).

Standard Systems

For a general pipe layout and wiring diagram on the "S" and "Y" plan systems please see fig. 15a, 15b, and 16a, 16b.

OPTIMAX "S" Plan

Pipe layout

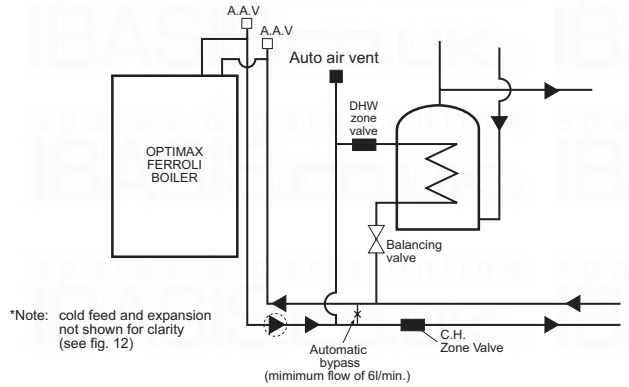

Fig. 15a

Wiring diagram

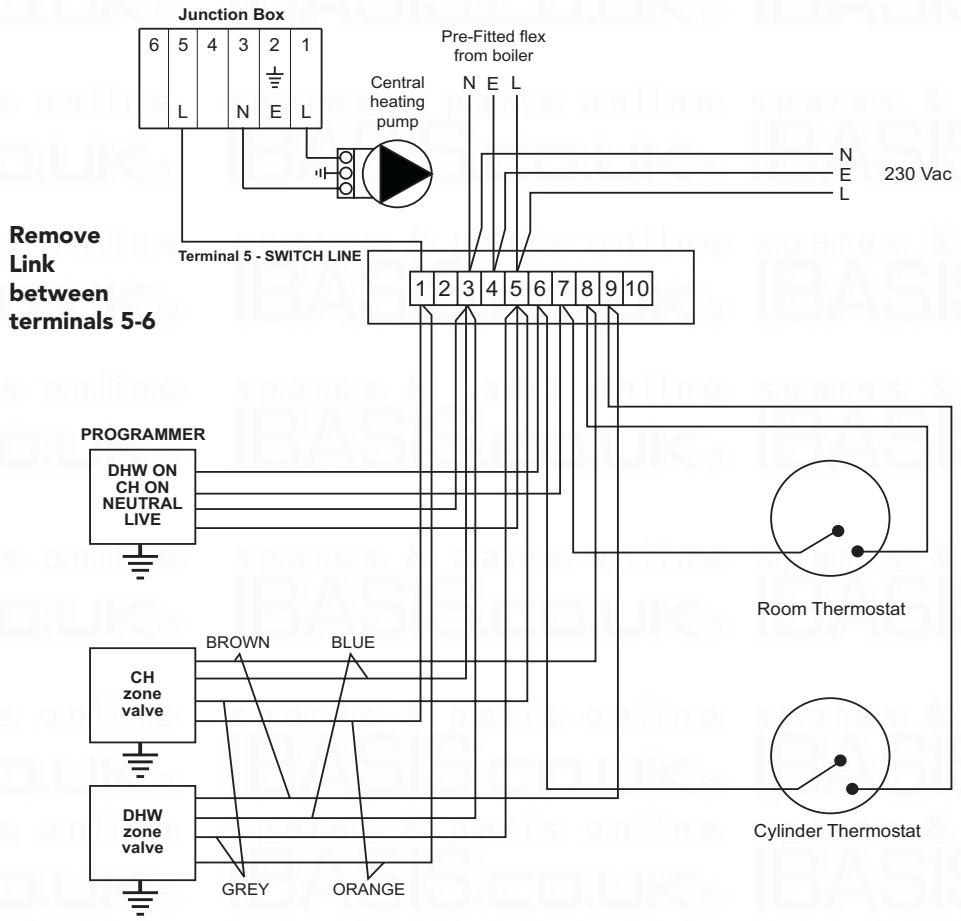

Fig. 15b

Cod. 3540M164 - 02/2009 (Rev. 00)

Optimax "Y" Plan

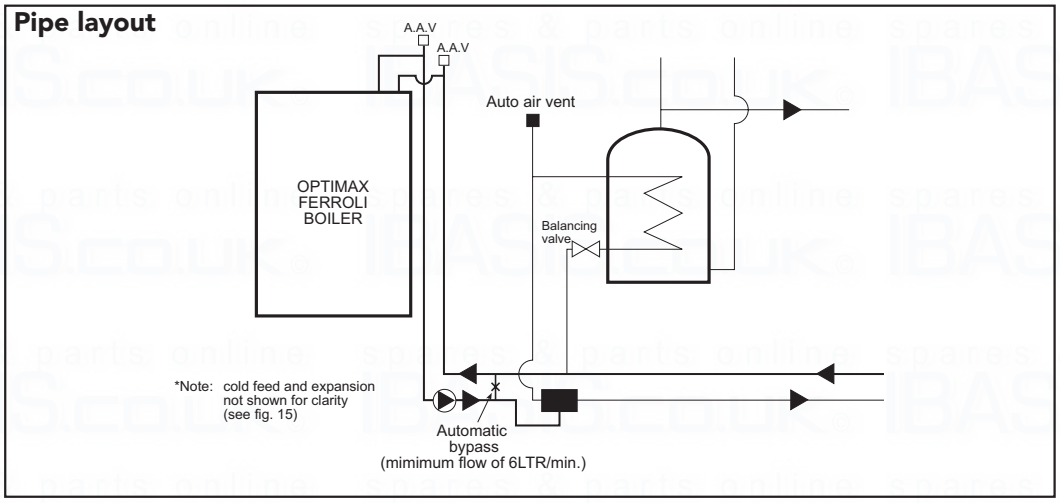

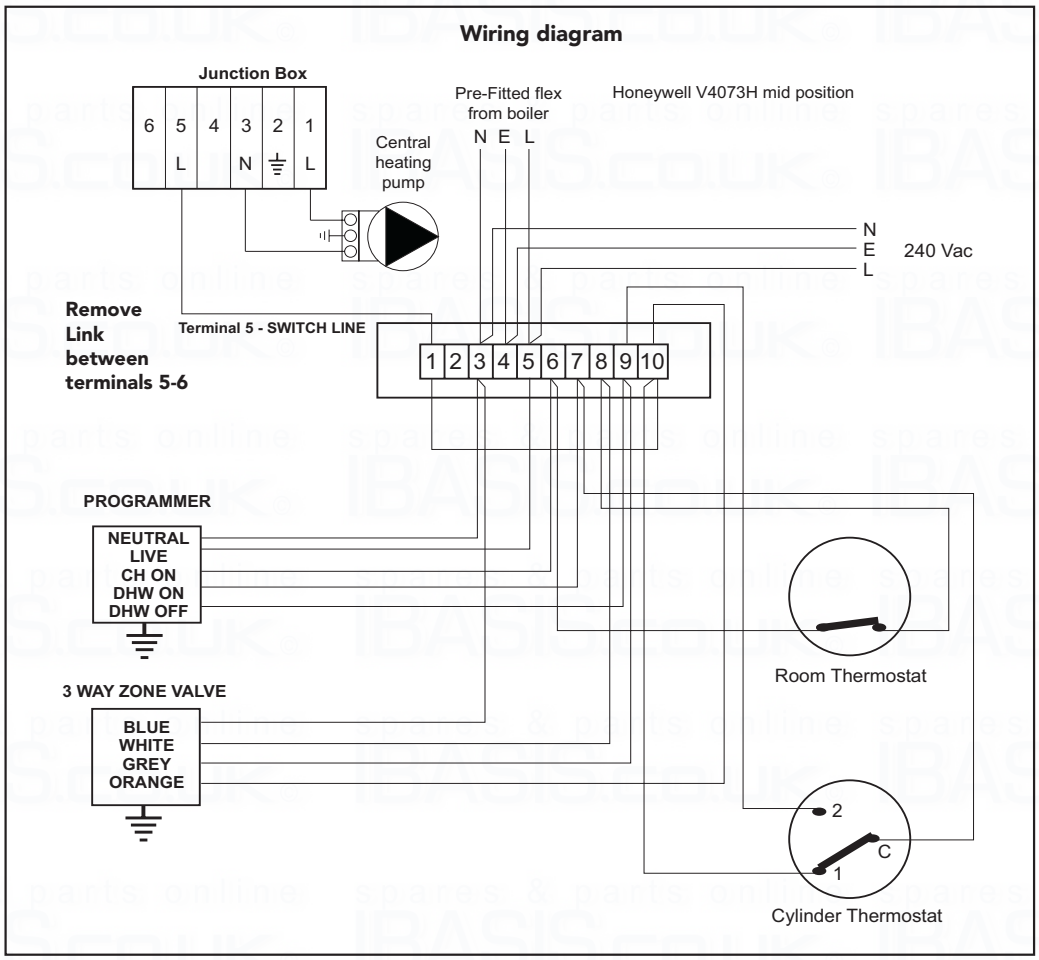

fig. 16a

fig. 16b

2.6 Flue system

The unit is "type C" with a **sealed chamber** and forced draught, the air inlet and flue outlet must be connected to one of the following flue systems. With the aid of the tables and methods of calculation indicated, before commencing installation, it is first necessary to check that the flue system does not exceed the maximum permissible length. The current standards and local regulations must be observed.

⚠ It should be noted that only Ferroli flue system and accessories should be used on this appliance, as per BS 5440 2000 and C.E. test certification.

Connection with concentric flue system

The unit can be connected to a concentric air/flue duct with a Horizontal or Vertical outlet as shown on the following drawings. Numerous accessories are available on request to meet the various installation requirements. Please refer to our "flue manual" or the price list.

Standard concentric flue installation

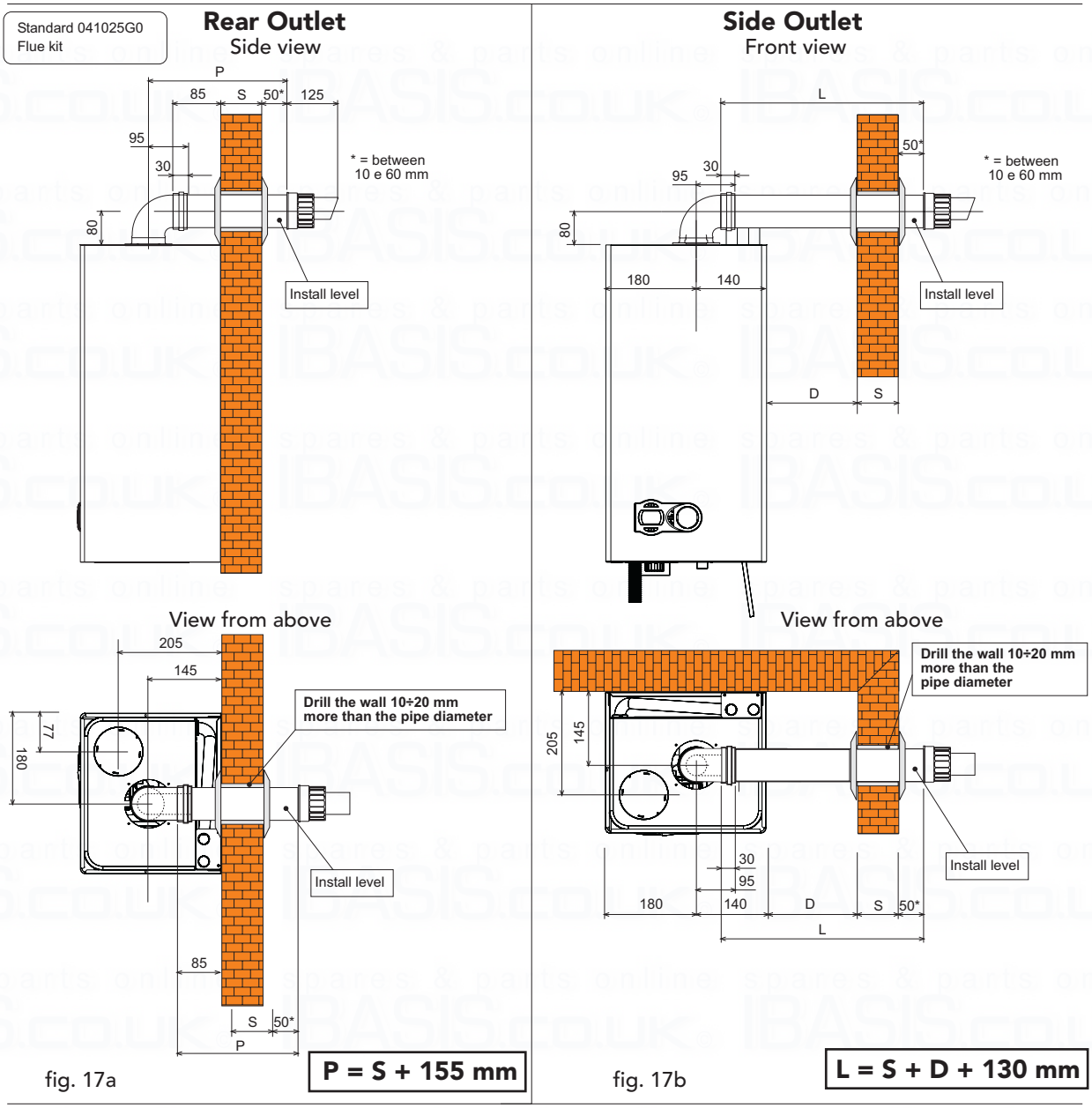

fig. 17a **P = S + 155 mm**

fig. 17b **L = S + D + 130 mm**

Horizontal flue installation

1. Define the position for installing the unit.
2. If using standard flue (041025G0) this must be installed level, for non-standard flue lengths over 1mtr a fall of 3 mm per metre should be incorporated back to the boiler.
3. Make a hole of diameter 10 - 20 mm greater than the nominal diameter of the concentric pipe used.
4. If necessary, cut the terminal length to size, ensuring that the external pipe protrudes from the wall by between 10 and 60 mm (fig. 17a and 17b). Remove the cutting burrs.
5. Connect the flue to the boiler, positioning the seals correctly. Seal the flue into the wall with silicone or sand + cement and cover with wall seals provided.

☞ Flue seals should be lubricated with a silicone type grease to prevent damage (grease not supplied)

Vertical Outlet

The total length in equivalent metres of the concentric flue must not exceed the maximum lengths stated in the following table, note that each bend gives rise to the stated reduction. For example, a duct = 60/100 composed of 1 bend of 90° +1 horizontal metre + 2 bends of 45° + 1 horizontal metre has a total equivalent length of 4 metres.

Vertical flueing

The installation of a concentric vertical flue can be carried out as follows,

Install the appliance as previously mentioned in this manual.

1. Connect onto the flue assembly at the top of the appliance a concentric vertical adaptor part number 1KWMA71W,
2. Use the required amount of 1mtr flue extensions (part number 1KWMA56U) inserting them spigot down ensuring the seals are well lubricated with silicone grease (not supplied) and correctly located into the sockets.
3. If required 45° bends (Part number1KWMA64A) may be used with a resistance value of 0.5mtrs each, the flue should be routed in such away to avoid any unnecessary deviation and thus minimise the amount of bends required.
4. The termination should be made through our concentric flue outlet (part number 1KWMA83U) in conjunction with a roof slate pitched (part number 1KWMA82U) or flat roof (part number 1KWMA81U) The storm collar must be fixed on using the three screws provided and sealed with an external grade silicone (not supplied).
5. For longer flue lengths a 125mm concentric flue system is available.
6. All flue installations must comply with BS5440 part 1 and must only be of Fèrroli manufacture. The vertical flue must continually rise and be supported throughout its length. The flue must be inspected whilst commissioning the appliance to ensure it is sound throughout its length.

This information is for guidance purposes and Fèrroli will in no way be held responsible for incorrect installation following this guide.

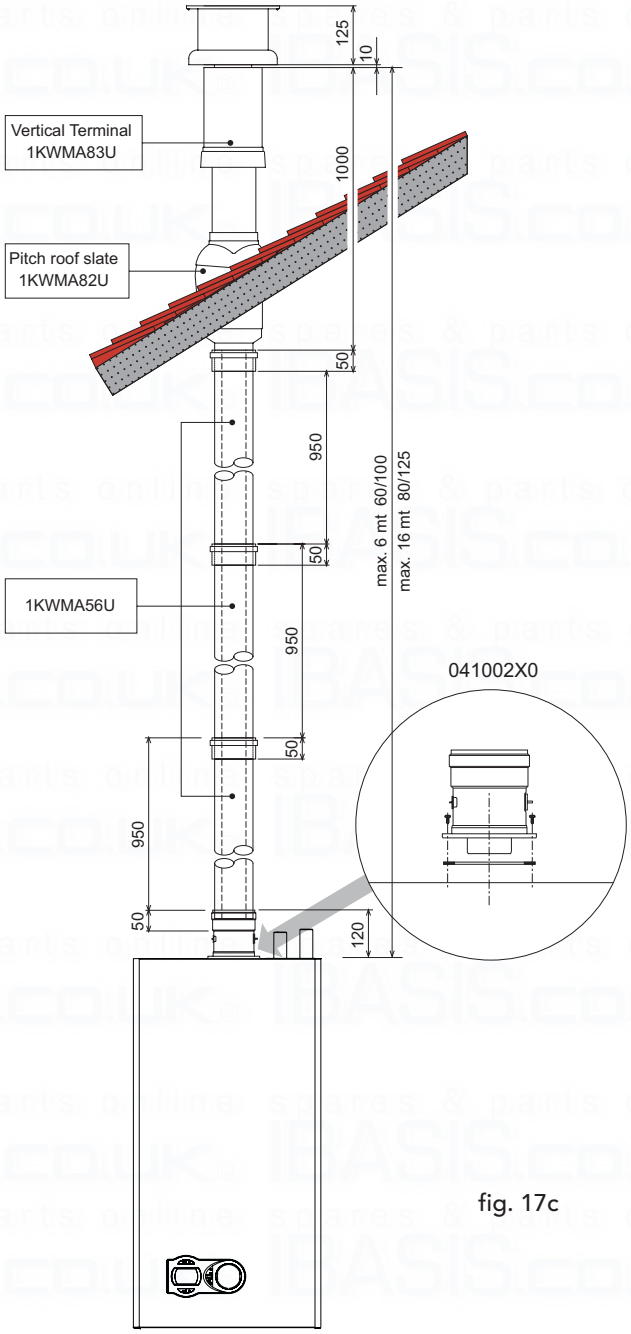

fig. 17c

Table 2a

	Ø mm 60/100	Ø mm 80/125
Maximum permissible duct length (Horizontal)	5 m	15 m
Maximum permissible duct length (Vertical)	6 m	16 m

Table 2b

Reduction factors for bends	
Concentric bend at 90° - Ø 60/100 mm	1 m
Concentric bend at 45° - Ø 60/100 mm	0,5 m
Concentric bend at 90° - Ø 80/125 mm	0,5 m
Concentric bend at 45° - Ø 80/125 mm	0,25 m

Connection with 80 mm pipe system

The unit can be connected to a system of separate air/flue pipes for a Horizontal or Vertical outlet as shown fig 18 - 19 . Numerous accessories are available on request to meet the various installation requirements. The components used most frequently are stated in tables 4 - 5. Please refer to the flue manual or the price list for additional components.

To check you do not exceed the maximum permissible flue length, it is necessary to make a simple calculation before installation:

1. For each component, tables 4 - 5 provide an "equivalent loss in linear metres", depending on the position of installation of the component (with air intake or flue extraction, vertical or horizontal).

   The loss is called "equivalent length" since it is compared to the loss of one metre of flue (defined as equal to 1). For example, a bend at 90° of Ø80 in flue extraction has an equivalent loss of 2 linear metres, i.e. it has a loss equal to that of 2 linear metres of flue length.

2. After completely defining the layout of the system of split flues, add up the losses in equivalent metres, depending on the installation position, of all the components and accessories in the system.

3. Check that the total calculated loss is less than or equal to **95** equivalent **metres**, i.e. the maximum permissible for this model of boiler.

For complete flue options please contact ferroli or check our comprehensive flue manual.

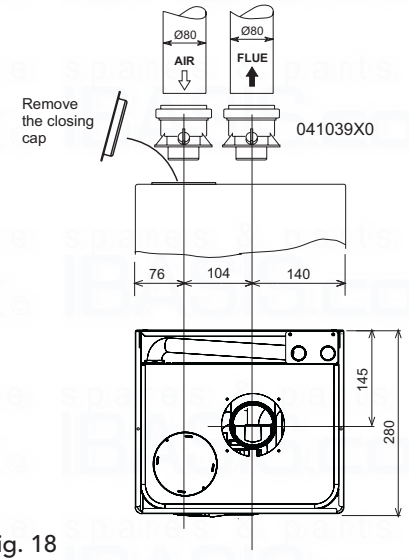

fig. 18

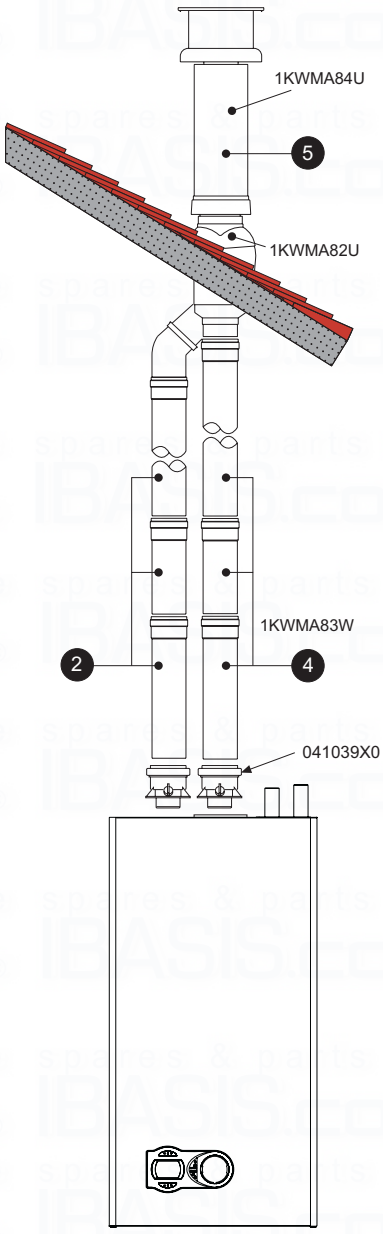

fig. 19

Table 3			
Ref.	**N° Pieces**	**Description**	**Equivalent loss**
2	36	Vertical air pipe Ø80	36 m
4	29	Vertical flue pipe Ø80	46,4 m
5	1	80 Ø vertical flue Kit	12,0 m
		Total	**94,4 m**

Table of Ø80 flue and accessory

Table 4

Accessories Ø 80		Equivalent losses in metres (linear)			
		Air		Flue	
Description		Vertical	Horizontal	Vertical	Horizontal
Pipe Ø 80 male-female	1KWMA83W • 1,00 m	1	1	1.6	2
Bend 45° Ø 80 mm male - female	1KWMA65W	1.2		1.8	
Bend 90° Ø 80 mm male - female	1KWMA01W	1.5		2.0	

Table 5

Accessories Ø 80		Equivalent losses in metres (linear)			
		Air		Flue	
Description		Vertical	Horizontal	Vertical	Horizontal
Horozontial flue terminal	1KWMA86A				5
Horozontial air terminal	1KWMA85A		2		
Vertical flue terminal	1KWMA84U	12			

The stated loss values refer to genuine Ferroli flue accessories.

Terminal Position

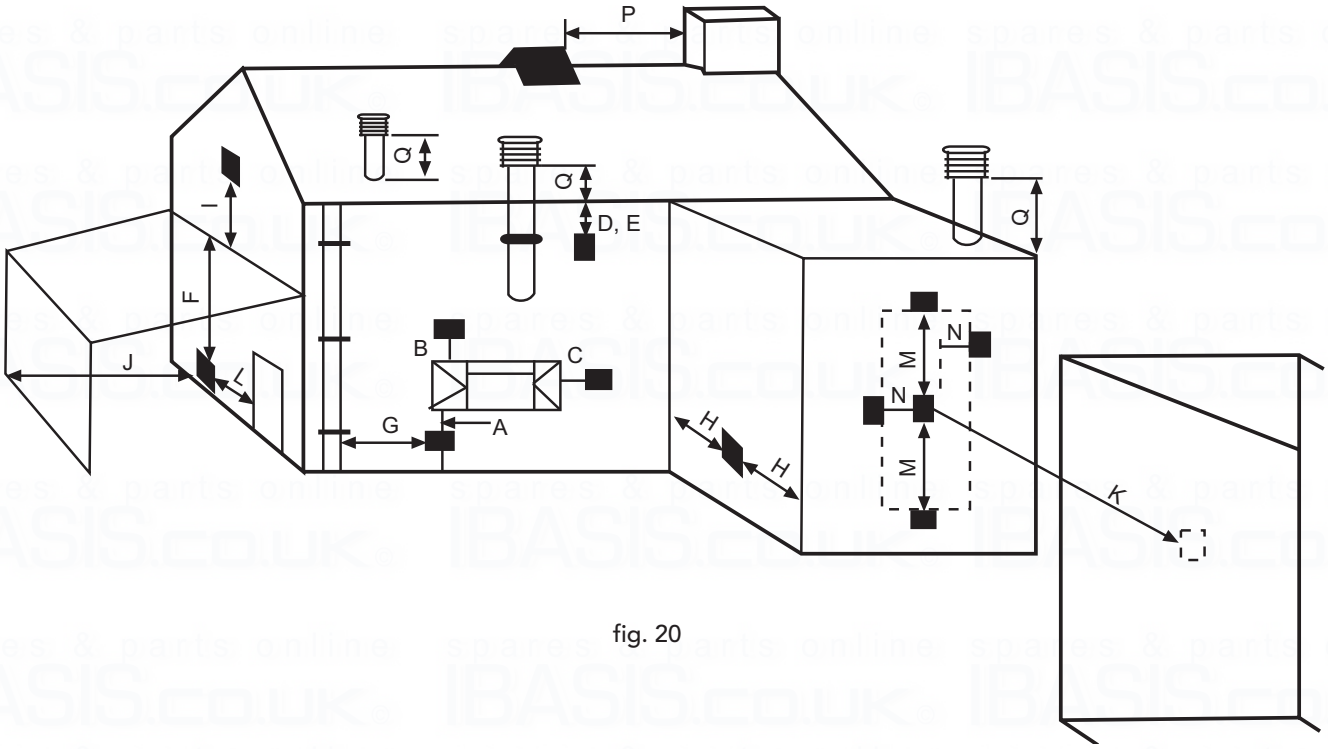

fig. 20

Minimum Dimensions of Flue Terminal Positions

A	Directly below an opening, air brick, opening windows, etc.	300mm
B	Above an opening, air brick, opening windows, etc.	300mm
C	Horizontally to an opening, air brick, opening windows, etc.	300mm
D	Below gutters, soil pipes or drain pipes	75mm
E	Below eaves	200mm
F	Below balconies or car port roof	200mm
G	From a vertical drain pipe or soil pipe	150mm
H	From an internal or external corner	100mm
I	Above ground roof or balcony level	300mm
J	From a surface facing the terminal	600mm
K	From a terminal facing the terminal	1200mm
L	From an opening in the car port (e.g. door, window) into the dwelling	1200mm
M	Vertically from a terminal on the same wall	1500mm
N	Horizontally from a terminal on the same wall	300mm
O	From the wall on which the terminal is mounted	N/A
P	From a vertical structure on the roof	150mm
Q	Above intersection with roof	300mm

NOTE

N/A = Not applicable

In addition, the terminal should not be nearer than 150mm (fanned draught) to an opening in the building fabric formed for the purpose of accommodating a built-in element such as a window frame. A terminal guard must be used if the terminal is less than 2 metre's from the ground.

Condensing Terminal Positions: If the flue is to be terminated at low level, then the potential effect of the plume must be considered.

The plume should not be directed:
- across a frequently used access route
- towards a window or door
- across a neighbouring property

Connection to collective flues or single flues with natural draught

If you are then going to connect the **OPTIMAX HE PLUS 18 OV** boiler to a collective flue or a single flue with natural draught, the flue must be expressly designed by professionally qualified technical personnel in conformity with the standards and rules in force.

In particular, flues must have the following characteristics:

- Be sized according to the method of calculation stated in the standard
- Be airtight to the products of combustion, resistant to the fumes and heat and waterproof for the condensate
- Have a circular or square cross-section (some hydraulically equivalent sections are permissible), with a vertical progression and with no constrictions
- Have the flue conveying the hot fumes adequately distanced or isolated from combustible materials
- Be connected to just one unit per floor, for at most 6 units in all (8 if there is a compensation duct or opening)
- Have no mechanical suction devices in the main ducts
- Be at a lower pressure, all along their length, under conditions of stationary operation
- Have at their base a collection chamber for solid materials or condensation of at least 0.5 m, equipped with a metal door with an airtight closure.

2.7 Condensate outlet connection

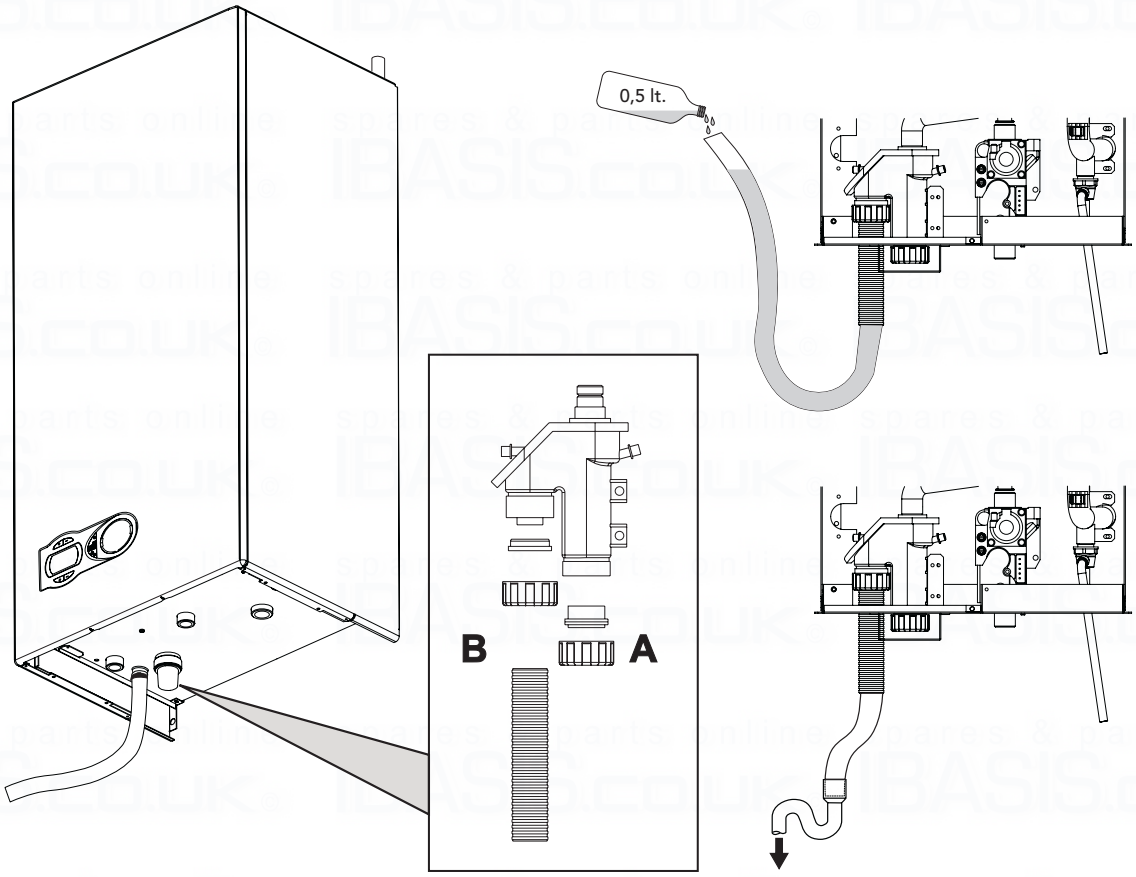

fig. 21

The boiler is equipped with an internal air-trap to drain off the condensate. Fit the inspection coupling **A** and the hose **B**, pushing it on for approximately 3 cm and securing it with a clamp.

Fill the air-trap with approximately 0.5 ltrs of water and connect the hose to the waste system, or soakaway.

Condensate discharge

Where possible the condensate should discharge into an internal soil pipe or waste system. The minimum pipe diameter required is 22 mm, a trap has already been fitted to the appliance with a flexible tail to facilitate the connection to the condensate discharge pipe.

The pipe should be a solvent weld plastic, not copper, as the condensate has a ph value of 4 (slightly acidic).

Where it is not possible to terminate internally, the condensate discharge pipe may be run outside (see below drawing).

Any external run is subject to freezing, in severe weather conditions. To avoid this the pipework should be installed to dispose of the condensate quickly, with as much as possible run internally, before passing through the wall.

Pipework external to the building should be increased in diameter to 32 or 40 mm solvent weld. It should be run to a external drain or soakaway, with a maximum length of 3 metres.

When a soakaway (condensate absorption point) is used, it should be constructed as shown below, or use a specifically designed unit, for example Mc Alpine SOAK1GR available from most plumbing and heating stockists.

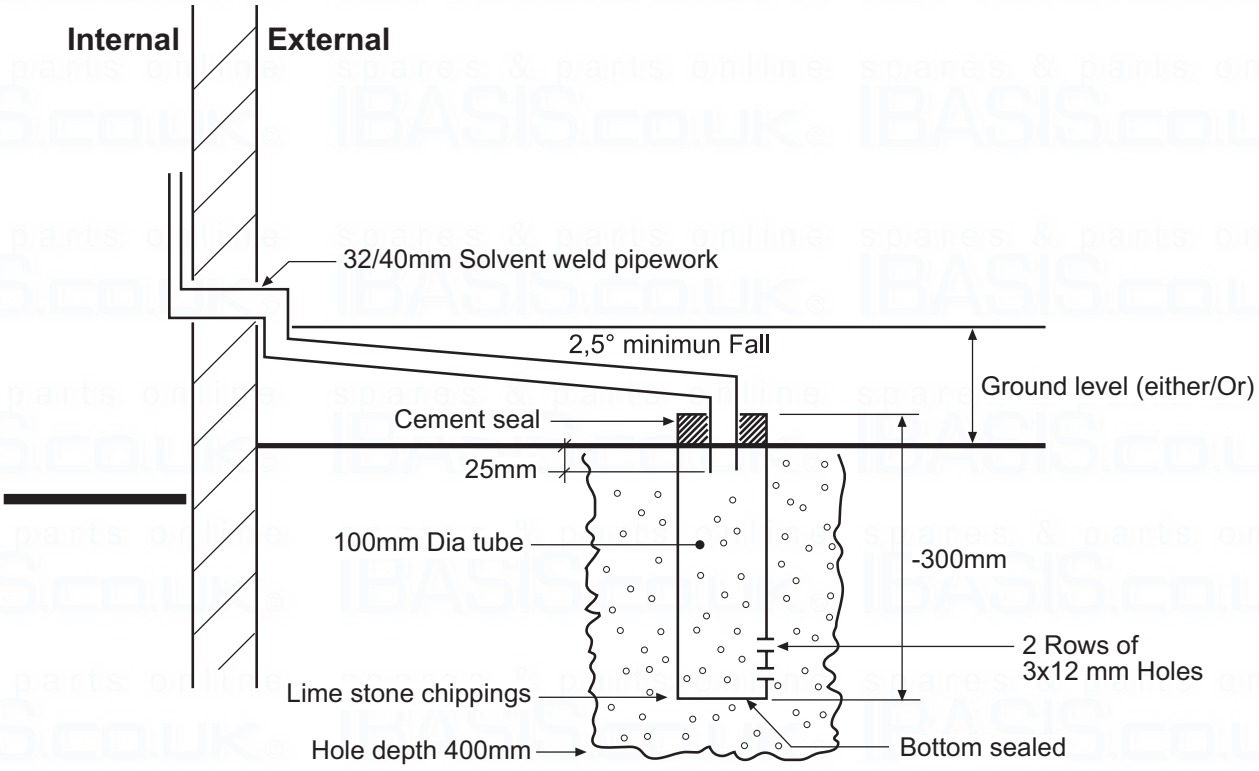

fig. 22

3. SERVICE AND MAINTENANCE

3.1 Adjustments

All adjustment and conversion operations must be carried out by Qualified Personnel such as ferroli Technical Service.

FERROLI declines any responsibility for damage or physical injury caused by unqualified and unauthorized persons tampering with the device.

Gas supply conversion

The unit can function with either Natural Gas or LPG (commercial propane)and is factory-set for use with one of the two gases, as clearly shown on the packing and on the unit's dataplate. Whenever a different gas to that for which the unit is preset has to be used, a conversion kit will be required, proceeding as follows:

1 Remove the casing.
2 Open the sealed chamber.
3 Release the fixing clip **C** and remove the gas pipeA from the fan - venturi assembly.
4 Replace the nozzle **B** inserted in the gas pipe with that contained in the conversion kit.
5 Reassemble the gas pipe **A** with the clip and check the seal of the connection.
6 Apply the plate contained in the conversion kit, near the dataplate.
7 Refit the sealed chamber and casing.
8 Adjust the parameter for the specific type of gas to be used:
- Turn the boiler onto standby
- Press the DHW buttons (part. 1, 2 - fig. 1) for 10 seconds: the display will show "P01" blinking
- Press the DHW buttons (part. 1, 2 - fig. 1) to set parameter 00 (for natural gas operation) or 01 (for LPG operation)
- Press the DHW buttons (part. 1, 2 - fig. 1) for 10 seconds
- The boiler will go back onto standby

9 Check working pressure.
10 Check CO_2 mixture as detailed (page 28 combustion analyser testing).

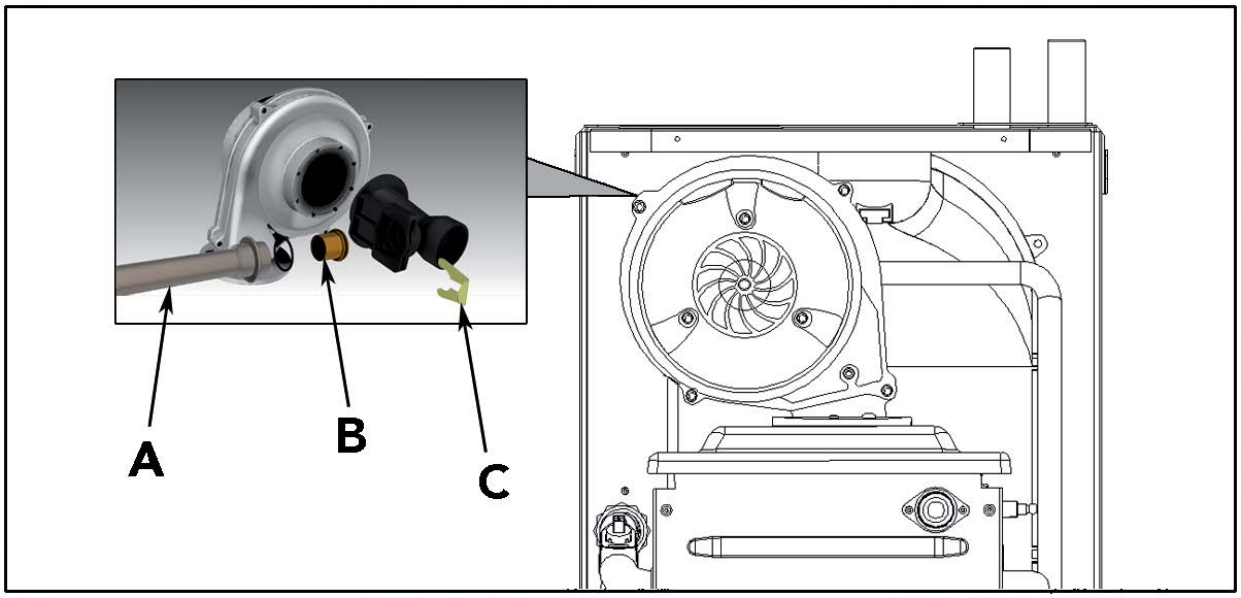

fig. 23

3.2 System start-up

Commissioning must be performed by Qualified Personnel.
Checks to be made at first ignition, and after all maintenance operations that involved disconnecting from the systems or an intervention of a safety device.

Before lighting the boiler:

- Open any isolation valves between the boiler and the system.
- Check the tightness of the gas system, proceeding with caution and use gas leak detection fluid to detect any leaks in connections.
- Check the pre-filling of the expansion tank (ref. sec.4.4)
- Fill the water system and make sure that all air contained in the boiler and the system has been vented by opening the air vent valve on the boiler and any vent valves on the system.
- Make sure there are no water leaks in the system, hot water circuits, connections or boiler.
- Make sure the electrical system is properly connected.
- Make sure that the unit is connected to a good earthing system.
- Make sure there are no flammable liquids or materials in the immediate vicinity of the boiler.
- Vent and spin the pump.
- Ensure the flue system is correctly fitted, including terminal locations.

Ignition

- Open the gas valve upstream of the boiler.
- Purge the air from the installation pipework to the appliance.
- Switch on the boiler electrical supply.
- Press the eco comfort key on the boiler for 5 seconds (part. 7 - fig. 1).
- The boiler is now ready to function automatically whenever the external controls call for a demand.

In case of an electrical power failure while the boiler is working, the burner will go out. When power returns, the boiler will run the self-test cycle again, after which the burner will automatically re-ignite (if there is still demand for heat).

Checks during operation

- Check the tightness of the gas circuit and water systems.
- Check the efficiency of the flue and air-flue ducts while the boiler is working.
- Check that the water is circulating properly between the boiler and the system.
- Make sure that the gas valve modulates correctly.
- Check the proper ignition of the boiler by performing various tests, turning it on and off with the room thermostat or remote control.
- Make sure that the fuel consumption indicated on the meter corresponds to that given in the technical data table in section 4.4 page 33

Turning off

Press the eco comfort key for 5 seconds (part. 7 - fig. 1).

3.3 Maintenance

The following operations are strictly reserved for Qualified Personnel, such as corgi registered engineers or Ferroli engineers.

Seasonal inspection of the boiler and flue

It is advisable to carry out the following checks at least once a year:

- The control and safety devices (gas valve, flow meter, thermostats, etc.) must function correctly.
- The flue terminal end piece and ducts must be free of obstructions and leaks.
- The gas and water systems must be sound.
- The burner and exchanger must be clean.
- The electrodes must be free of scale and correctly positioned.
- The system pressure when cold must be approx 1 bar; otherwise, bring it to that value.
- The expansion vessel must be filled to 1 bar cold with zero system pressure.
- The gas flow and pressure must correspond to that given in table 10 section 4.4 page 33.
- The circulating pump must be vented and free of debris.
- The returned filter cleaned.
- The condensate trap inspection bowl should be cleaned and free of debris.

Opening the casing

To open the boiler casing, you need to follow the sequence given below and the instructions of fig. 24.

1 Using a screwdriver, fully unscrew and remove the 2 screws **"A "**
2 Open by lowering the panel **"B "**
3 Lift and take off the casing **"C "**

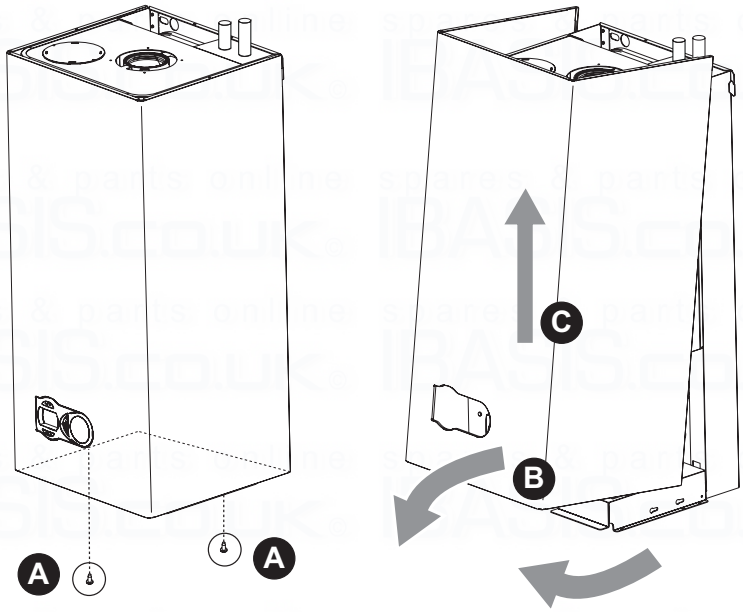

fig. 24

Cleaning the boiler and burner

The body and burner must not be cleaned with chemical products or wire brushes. Special care must be taken over all the sealing systems pertaining to the sealed chamber (gaskets, cable clamps, etc.). In addition, it is necessary to pay attention after performing all these operations to check and carry out all the phases of ignition and thermostat operation, the gas valve and circulation pump.

After these checks, make sure there are no gas leaks.

Combustion analysis

It is possible to analyse the combustion through the air and flue sampling points shown in fig. 25.

To make the measurement, it is necessary to:

1) Open the flue sampling point
2) Insert the probe;
3) Press CH button (part. 3, 4 - fig. 1) for 5 seconds to turn on TEST mode;
4) Wait 10 minutes for the boiler to stabilize
5) Take the measurement.

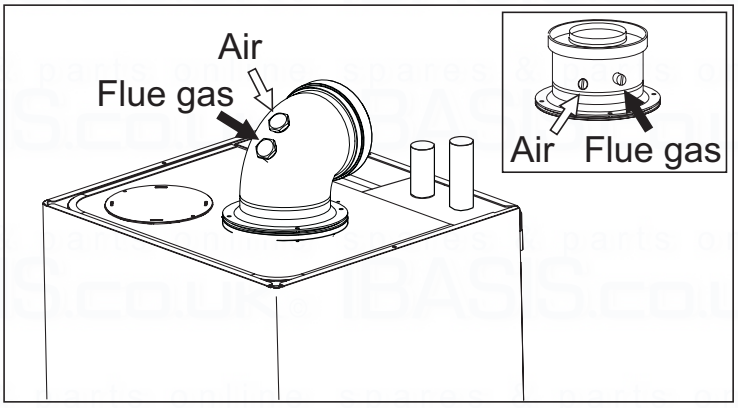

fig. 25

NAT GAS; CO2 reading should be 8.7 to 9.0%
L.P.G; CO2 reading should be 9.5 to 10%

Readings taken with an unstabilized boiler will cause measurement errors.

3.4 Troubleshooting

Fault Diagnosis

In the event of operating problems or trouble, the display will flash and a fault identification code appears.

There are faults that in order to restore operation the RESET button must be pressed (ref.6 - fig. 1); or if the boiler fails to start, it will be necessary to repair the fault (code nos. F1 to F24). Other faults cause temporary shutdowns that are automatically reset as soon as the value comes back within the boiler's normal working range (codes from 25 to 47).

When the boiler starts functioning normally again, the display stops flashing and the fault code disappears.

	Fault	Possible cause	Cure
A01	No burner ignition	No gas	Check the regular gas flow to the boiler and the air has been purged from the pipes.
		Detection or ignition electrode fault	Check that the electrodes are correctly positioned and free of any deposits
		Defective gas valve	Check and change the gas valve
		Incorrect inlet gas pressure	Check inlet gas pressure
		Siphon obstructed	Check and if necessary change the siphon
A02	Flame detected with the burner off	Ionisation electrode defective	Check the ionizing electrode wiring
		Main board defective	Check the PCB
A03	High limit protection	Flow sensor not active or correctly located	Check the correct positioning and operation of the flow sensor
		No system circulation	Check the pump and radiator valves present in the system and automatic by-pass
A04	Flue gas fault	Fault F07 happened 3 times in the last 24 hours	Check the flue
A05	Fan problem	Tachometer signal interruped for 1 hour	Check the wiring and the fan
A06	No flame after the ignition phase (6 times in 4 min.)	Detection electrode fault	Check that the electrode is correct positioned and if necessary change it
		Flame instable	Check the burner
		Incorrect valve gas Offset	Check Offset at the minimum power
		Flue gas circuit obstructed	Check if flue gas circuit is free
		Siphon obstructed	Check and if necessary change the siphon
A41	Flow sensor disconnected	Sensor disconnected	Check the correct position and operation of the flow sensor
F07	Flue gas fault	The exhaust gases temperature becomes higher than 95°C for 2 minutes longer.	Check the flue
F10	Flow sensor fault	Sensor damaged or short circuited	Check the wiring or change the sensor
		Sensor damaged or wiring broken	Check the wiring or change the sensor
F11	Return sensor fault	Sensor damaged or wiring shorted	Check the wiring or change the sensor
		Sensor damaged or wiring broken	Check the wiring or change the sensor

	Fault	Possible cause	Cure
F13	Flue sensor fault	Sensor damaged or wiring shorted	Check the wiring or change the sensor
		Sensor damaged or wiring broken	Check the wiring or change the sensor
F14	Flow sensor fault	Sensor damaged or short circuited	Check the wiring or change the sensor
		Sensor damaged or wiring broken	Check the wiring or change the sensor
F15	Fan problem	Tachometer signal interrupted, fan connection	Check the wiring and fan
		Fan damaged, debris in fan	Check the fan, clean debris
F34	Supply voltage under 180V.	Electric mains fault	Check the electrical system
F35	Irregular mains frequency	Electric mains fault	Check the electrical system
F42	Flow sensor fault	Sensor damaged	Change the sensor

4. TECHNICAL CHARACTERISTICS AND DATA

4.1 Dimensions and connections

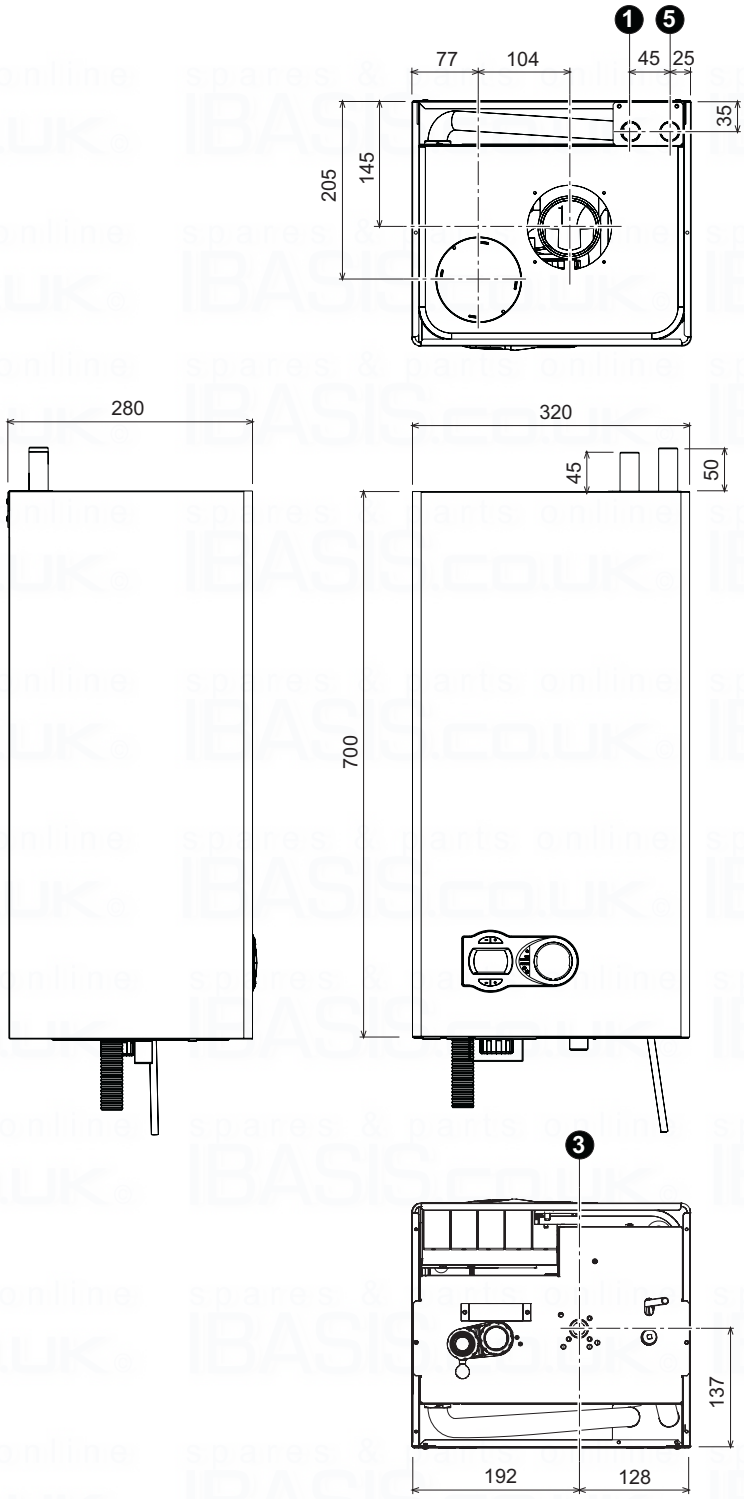

fig. 26

Key

1 System flow (22 mm compression union)
3 Gas inlet (22 mm with isolation valve fitted)
5 System return - 22 mm compression union

4.2 General view and main components

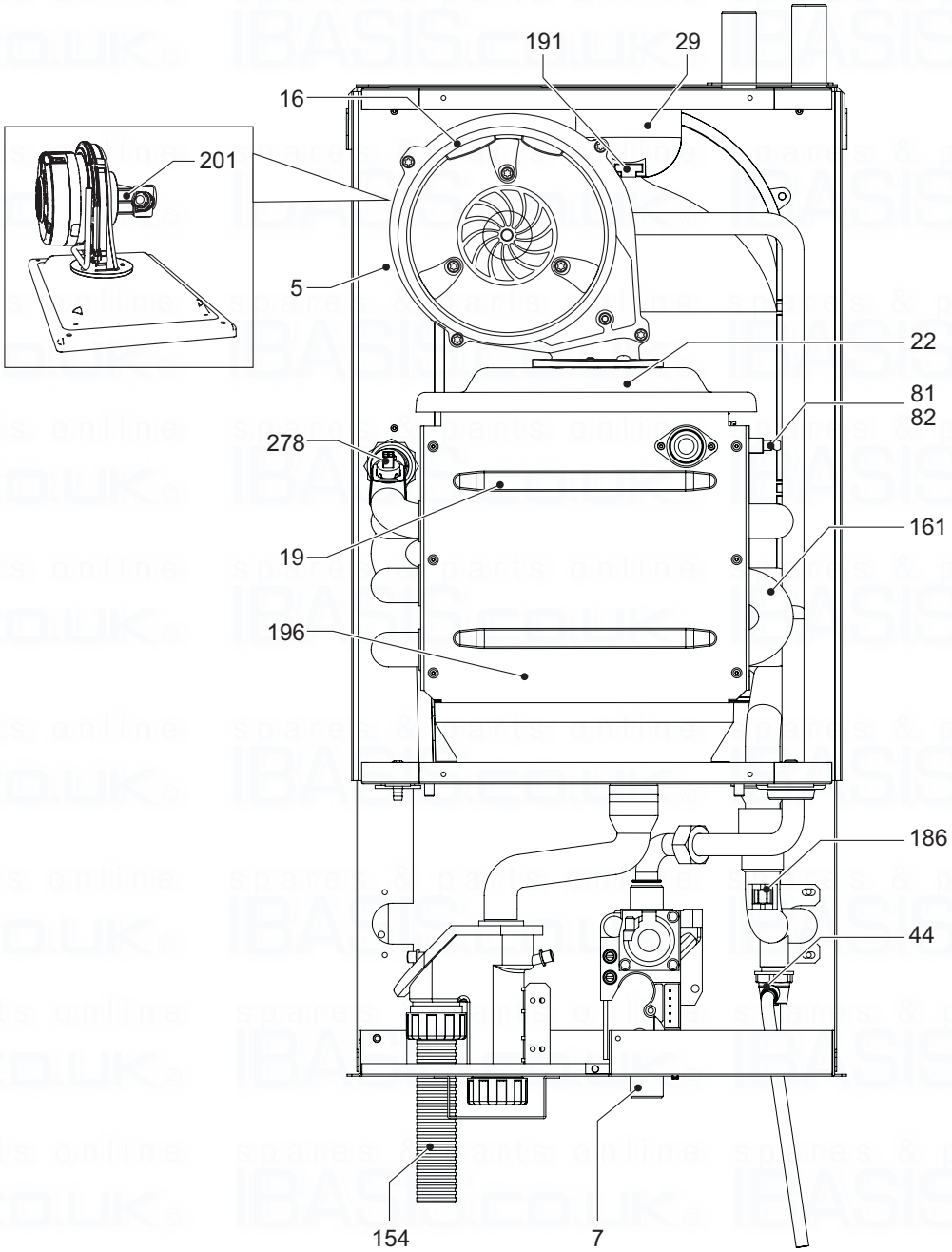

fig. 27

5	Room sealed compartment	**81**	Ignition electrode
7	Gas inlet	**82**	Ionisation electrode
10	CH flow	**154**	Condensate outlet pipe
11	CH return	**161**	Heat exchanger
16	Premix fan assembly	**186**	Return sensor
19	Combustion compartment	**191**	Flue gas temperature sensor
22	Main burner	**196**	Condensate collector
29	Flue Collar	**201**	Fan Venturi
44	Gas valve	**278**	Double sensor (Safety + Heating)

4.3 Hydraulic diagram

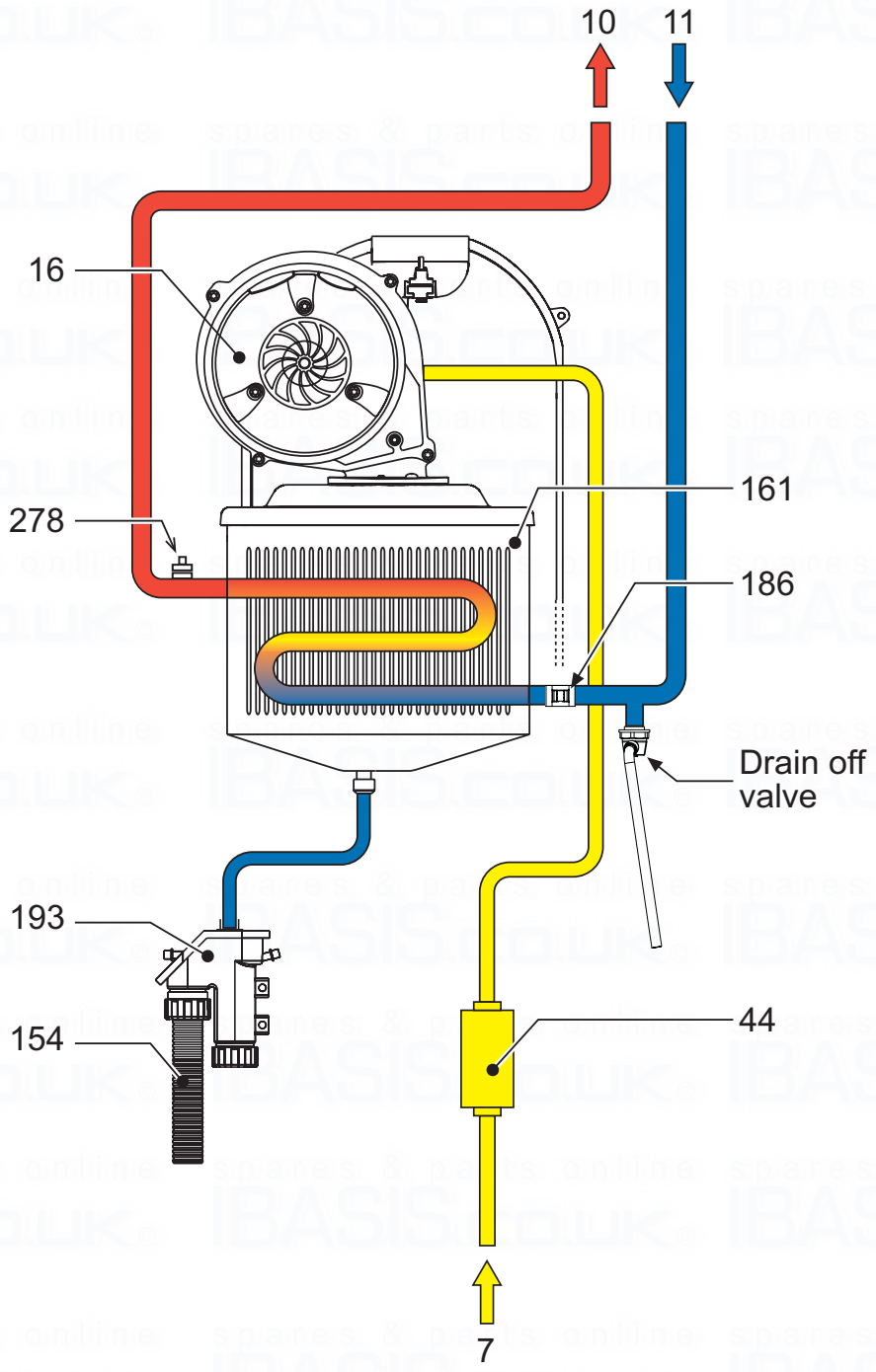

fig. 28

Key

7	Gas inlet
10	CH flow
11	CH return
16	Premix fan assembly
44	Gas valve
154	Condensate outlet pipe
161	Heat exchanger
186	Return sensor
193	Siphon
278	Double sensor (Safety + Heating)

4.4 Technical data table

Table 10

	Unit	Value
Max. CH Heat input	kW	18.0
Min. CH Heat input	kW	3.0
Max. useful heat output 80° C - 60° C	kW	17.7
Min. useful heat output 80° C - 60° C	kW	2.9
Max. useful heat output 50° C - 30° C	kW	19.0
Min. useful heat output 50° C - 30° C	kW	3.2
Efficiency Pmax 80° C - 60° C	%	98.3
Efficiency Pmin 80° C - 60° C	%	97.3
Efficiency Pmax 50° C - 30° C	%	105.4
Efficiency Pmin 50° C - 30° C	%	107.2
Efficiency 30%	%	109.1
Gas Injector (G20 - Natural Gas)	Ø mm	6.20
Natural Gas supply pressure (G20)	mbar	20
Max. CO2 (G20 - Natural Gas)	%	9
Min. CO2 (G20 - Natural Gas)	%	8.5
Max. natural Gas flow rate (G20)	m^3/h	1.90
Min. natural Gas flow rate (G20)	m^3/h	0.32
Gas Injector (G31 - Propane)	Ø mm	4.2
LPG supply pressure (G31)	mbar	37
Max. CO2 (G31 - Propane)	%	10
Min. CO2 (G31 - Propane)	%	9.5
Max. LPG flow rate (G31)	kg/h	1.41
Min. LPG flow rate (G31)	kg/h	0.23

Energy marking (92/42 EEC directive)		★★★★
NOx emission class		5
Max. flue gas temperature 80°C - 60°C	°C	64
Min. flue gas temperature 80°C - 60°C	°C	60
Max. flue gas temperature 50°C - 30°C	°C	45
Min. flue gas temperature 50°C - 30°C	°C	30
Max. flue gas flow rate	kg/h	30.3
Min. flue gas flow rate	kg/h	5.3
Max. working pressure in heating	bar	3
Min. working pressure in heating	bar	0.3
Maximum working temperature in heating	°C	85
Total boiler water content	litres	1
Electrical protection rating	IP	X5D
Power voltage/frequency	V/Hz	230/50
Max electrical power absorbed	W	50
Weight empty	kg	19
Type of unit		C13-C23-C33-C43-C53 C63-C83-B33
PIN CE		0461 BT 0920

4.5 Wiring diagram

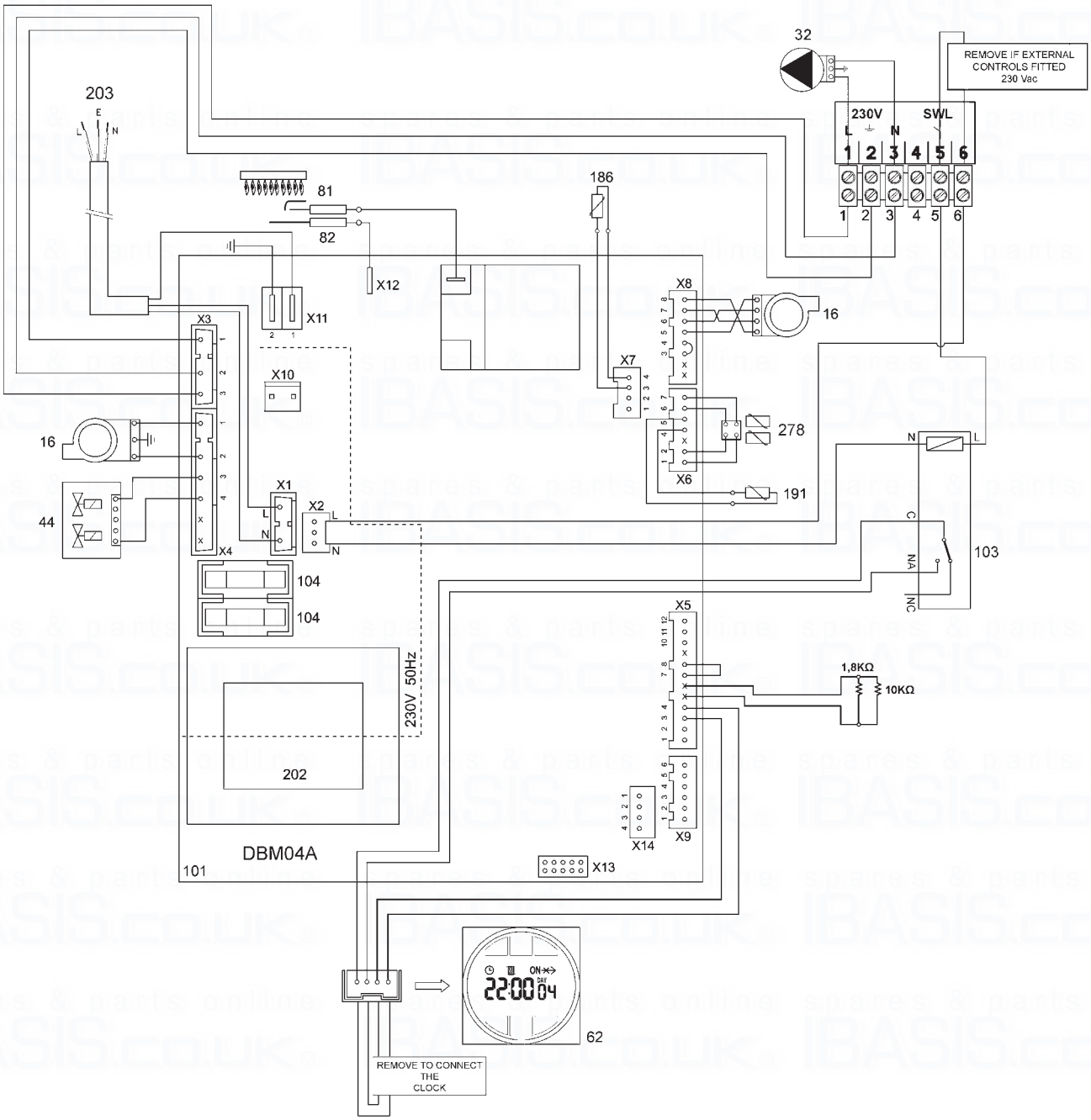

fig. 29

Key

16 Fan
44 Combination gas valve
62 Time clock (optional)
81 Spark Electrode
82 Ionisation electrode
101 Main p.c.b.
103 Relay
104 Fuse F3.15 amp
186 Return temperature sensor
191 Exhaust temperature sensor
202 Transformer 230V-24V
203 Supply lead
278 Double sensor (Safety + Heating)

BENCHMARK No. 2 6 7 _ _ _

Please add the first 4 digits of the Boiler serial No to complete the BENCHMARK No.

benchmark™ COLLECTIVE MARK

GAS BOILER COMMISSIONING CHECKLIST

BOILER SERIAL No. _____ **NOTIFICATION No.** _____

CONTROLS *To comply with the Building Regulations, each section must have a tick in one or other of the boxes*

TIME & TEMPERATURE CONTROL TO HEATING	ROOM T/STAT & PROGRAMMER/TIMER	☐	PROGRAMMABLE ROOMSTAT	☐
TIME & TEMPERATURE CONTROL TO HOT WATER	CYLINDER T/STAT & PROGRAMMER/TIMER	☐	COMBI BOILER	☐
HEATING ZONE VALVES	FITTED	☐	NOT REQUIRED	☐
HOT WATER ZONE VALVES	FITTED	☐	NOT REQUIRED	☐
THERMOSTATIC RADIATOR VALVES	FITTED	☐		
AUTOMATIC BYPASS TO SYSTEM	FITTED	☐	NOT REQUIRED	☐

FOR ALL BOILERS CONFIRM THE FOLLOWING

THE SYSTEM HAS BEEN FLUSHED IN ACCORDANCE WITH THE BOILER MANUFACTURER'S INSTRUCTIONS? ☐

THE SYSTEM CLEANER USED

THE INHIBITOR USED

FOR THE CENTRAL HEATING MODE, MEASURE & RECORD

GAS RATE		m^3/hr		ft^3/hr
BURNER OPERATING PRESSURE (IF APPLICABLE)	☐	N/A		mbar
CENTRAL HEATING FLOW TEMPERATURE				°C
CENTRAL HEATING RETURN TEMPERATURE				°C

FOR COMBINATION BOILERS ONLY

HAS A WATER SCALE REDUCER BEEN FITTED? YES ☐ NO ☐

WHAT TYPE OF SCALE REDUCER HAS BEEN FITTED?

FOR THE DOMESTIC HOT WATER MODE, MEASURE & RECORD

GAS RATE		m^3/hr		ft^3/hr
MAXIMUM BURNER OPERATING PRESSURE (IF APPLICABLE)	☐	N/A		mbar
COLD WATER INLET TEMPERATURE				°C
HOT WATER OUTLET TEMPERATURE				°C
WATER FLOW RATE				lts/min

FOR CONDENSING BOILERS ONLY CONFIRM THE FOLLOWING

THE CONDENSATE DRAIN HAS BEEN INSTALLED IN ACCORDANCE WITH THE MANUFACTURER'S INSTRUCTIONS? YES ☐

FOR ALL INSTALLATIONS CONFIRM THE FOLLOWING

THE HEATING AND HOT WATER SYSTEM COMPLIES WITH CURRENT BUILDING REGULATIONS ☐

THE APPLIANCE AND ASSOCIATED EQUIPMENT HAS BEEN INSTALLED AND COMMISSIONED IN ACCORDANCE WITH THE MANUFACTURER'S INSTRUCTIONS ☐

IF REQUIRED BY THE MANUFACTURER, HAVE YOU RECORDED A CO/CO_2 RATIO READING? N/A ☐ YES _____ CO/CO_2 RATIO

THE OPERATION OF THE APPLIANCE AND SYSTEM CONTROLS HAVE BEEN DEMONSTRATED TO THE CUSTOMER ☐

THE MANUFACTURER'S LITERATURE HAS BEEN LEFT WITH THE CUSTOMER ☐

COMMISSIONING ENG'S NAME PRINT _____ CORGI ID No. _____

SIGN _____ DATE _____

SERVICE INTERVAL RECORD

It is recommended that your heating system is serviced regularly
and that you complete the appropriate Service Interval Record Below.

Service Provider. Before completing the appropriate Service Interval Record below, please ensure you have carried out the service as described in the boiler manufacturer's instructions. Always use the manufacturer's specified spare part when replacing all controls

SERVICE 1 DATE
ENGINEER NAME
COMPANY NAME
TEL No.
CORGI ID CARD SERIAL No.
COMMENTS
SIGNATURE

SERVICE 2 DATE
ENGINEER NAME
COMPANY NAME
TEL No.
CORGI ID CARD SERIAL No.
COMMENTS
SIGNATURE

SERVICE 3 DATE
ENGINEER NAME
COMPANY NAME
TEL No.
CORGI ID CARD SERIAL No.
COMMENTS
SIGNATURE

SERVICE 4 DATE
ENGINEER NAME
COMPANY NAME
TEL No.
CORGI ID CARD SERIAL No.
COMMENTS
SIGNATURE

SERVICE 5 DATE
ENGINEER NAME
COMPANY NAME
TEL No.
CORGI ID CARD SERIAL No.
COMMENTS
SIGNATURE

SERVICE 6 DATE
ENGINEER NAME
COMPANY NAME
TEL No.
CORGI ID CARD SERIAL No.
COMMENTS
SIGNATURE

SERVICE 7 DATE
ENGINEER NAME
COMPANY NAME
TEL No.
CORGI ID CARD SERIAL No.
COMMENTS
SIGNATURE

SERVICE 8 DATE
ENGINEER NAME
COMPANY NAME
TEL No.
CORGI ID CARD SERIAL No.
COMMENTS
SIGNATURE

SERVICE 9 DATE
ENGINEER NAME
COMPANY NAME
TEL No.
CORGI ID CARD SERIAL No.
COMMENTS
SIGNATURE

SERVICE 10 DATE
ENGINEER NAME
COMPANY NAME
TEL No.
CORGI ID CARD SERIAL No.
COMMENTS
SIGNATURE

FERROLI TECHNICAL HELPLINE - 08707 282 885

spares & parts online
IBASIS.CO.UK®

spares & parts online
IBASIS.CO.UK®

Should you require any assistance during the installation call our Technical Service Helpline on 08707 282 885 option 1

Should you require a service engineer to visit call our service centre on 08707 282 885 option 2

Phone numbers:

Installer _____

Service Engineer _____

BECAUSE OF OUR CONSTANT ENDEAVOUR FOR IMPROVEMENT DETAILS MAY VARY SLIGHTLY FROM THOSE QUOTED IN THESE INSTRUCTIONS.

Ferroli

ALL SPECIFICATIONS SUBJECT TO CHANGE

Please note - to avoid incurring unnecessary expense, in the event of a boiler shut down, check this is not caused by lack of electricity supply, gas supply or low water pressure before calling our Customer Service Helpline.

Lichfield Road, Branston Industrial Estate, Burton Upon Trent, Staffordshire DE14 3HD
Tel. 08707 282 885 - Fax 08707 282 886

spares & parts online IBASIS.CO.UK