Ferroli

GRUPPO FERROLI

DOMIcondens F

ISO 9001 : 2000
CERTIFIED COMPANY

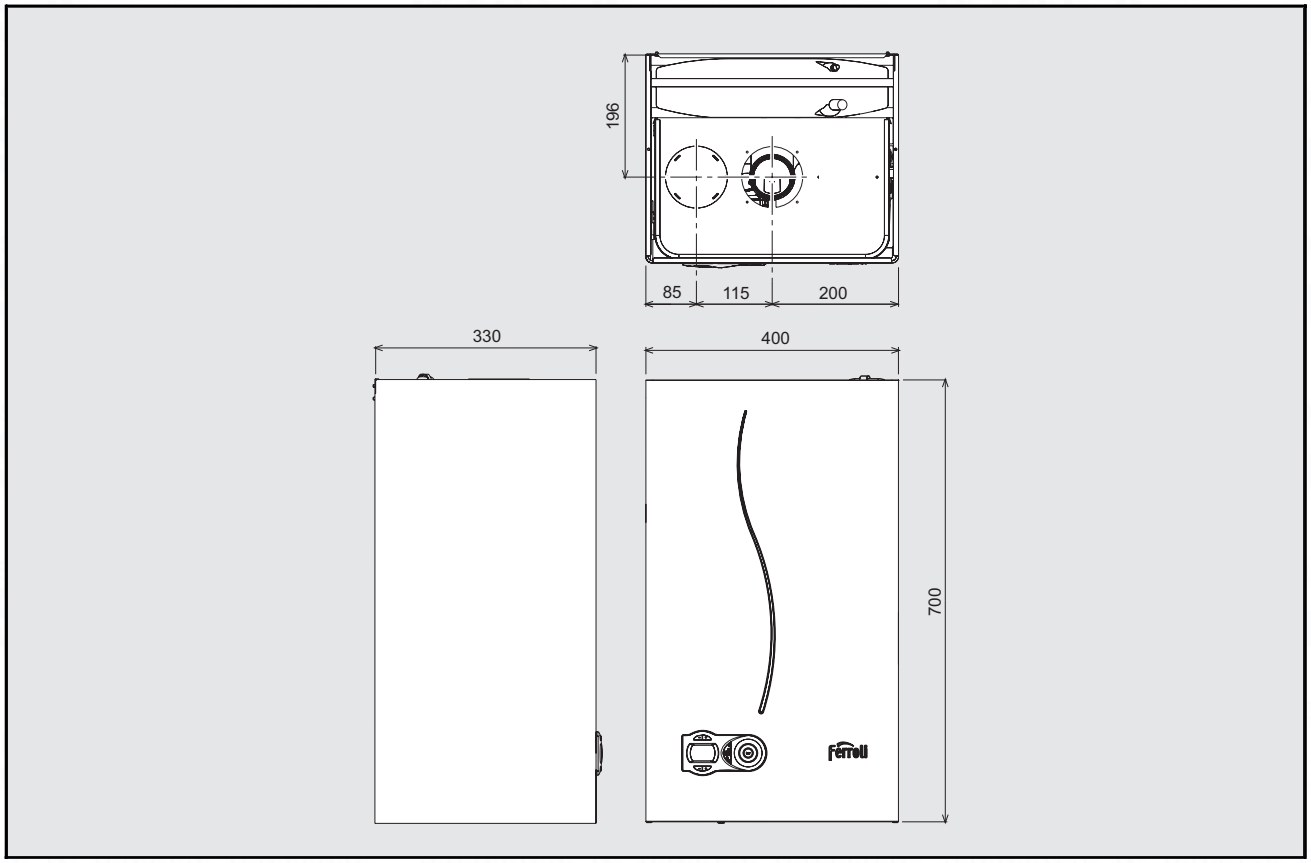

cod. 3540S921 – 11/2009 (Rev. 00)

CE

INSTRUCTIONS FOR USE, INSTALLATION AND MAINTENANCE

spares & parts online IBASIS.co.uk

GB

1. GENERAL INSTRUCTIONS

- Carefully read the instructions contained in this instruction booklet.
- After boiler installation, inform the user regarding its operation and give him this manual, which is an integral and essential part of the product and must be kept with care for future reference.
- Installation and maintenance must be carried out by professionally qualified personnel, according to current regulations and the manufacturer's instructions. Do not carry out any operation on the sealed control parts.
- Incorrect installation or inadequate maintenance can result in damage or injury. The Manufacturer declines any liability for damage due to errors in installation and use or failure to follow the instructions.
- Before carrying out any cleaning or maintenance operation, disconnect the unit from the power supply using the system switch and/or the special cut-off devices.
- In case of a fault and/or poor operation, deactivate the unit and do not attempt to repair it or directly intervene. Contact professionally qualified personnel. Repair/replacement of the products must only be carried out by professionally qualified using original spare parts. Failure to comply with the above could affect the safety of the unit.
- This unit must only be used for its intended purpose. Any other use is considered improper and therefore dangerous.
- The packing materials are potentially hazardous and must not be left within the reach of children.
- The images given in this manual are a simplified representation of the product. In this representation there may be slight and insignificant differences with respect to the product supplied.

2. OPERATING INSTRUCTIONS

2.1 Introduction

Dear Customer,

DOMIcondens F is a high-efficiency sealed chamber **condensing** heat generator for heating and hot water production running on natural gas or LPG, and equipped with a microprocessor control system.

2.2 Control panel

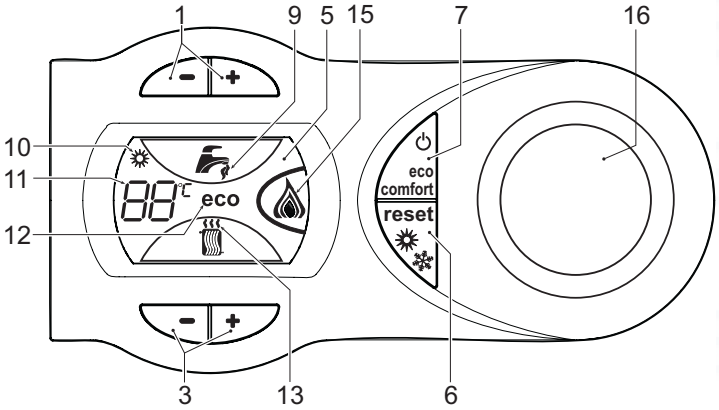

fig. 1 - Control panel

Key
1 = Domestic hot water temperature setting
3 = Heating system temperature setting
5 = Display
6 = Summer/Winter mode selection - Reset button
7 = Unit On/Off - Eco/Comfort mode selection button
9 = DHW mode
10 = Summer mode
11 = Temperature or faults
12 = Eco (Economy) mode
13 = Heating
15 = Burner On and actual power
16 = Clock prearrangement

Indication during operation

Heating

A heating demand (generated by the Room Thermostat or Remote Timer Control) is indicated by flashing of the hot air above the radiator on the display.

Domestic hot water (DHW)

A DHW demand (generated by drawing domestic hot water) is indicated by flashing of the hot water under the tap on the display.

2.3 Lighting and turning off

Connection to the power supply

- During the first 5 seconds the display shows the card software version.
- Open the gas cock ahead of the boiler.
- The boiler is now ready to operate automatically whenever hot water is drawn or in case of a room thermostat demand.

Boiler lighting and shutdown

Press the **on/off** button (detail 7 - fig. 1) for 5 seconds.

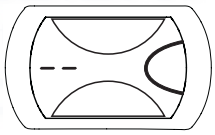

fig. 2 - Turning the boiler off

When the boiler is turned off, the PCB is still powered. Domestic hot water and heating are disabled. The antifreeze system remains activated. To relight the boiler, press the **on/off** button (detail 7 fig. 1) again for 5 seconds.

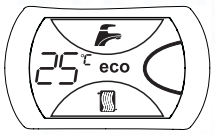

fig. 3

The boiler will be immediately ready to operate whenever domestic hot water is drawn or in case of a room thermostat demand.

The antifreeze system does not work when the power and/or gas to the unit are turned off. To avoid damage caused by freezing during long idle periods in winter, it is advisable to drain all water from the boiler, DHW circuit and system; or drain just the DHW circuit and add a suitable antifreeze to the heating system, complying with that prescribed in sec. 3.3.

2.4 Adjustments

Summer/Winter Switchover

Press the **summer/winter** button (detail 6 - fig. 1) for 2 seconds.

The display activates the Summer symbol (detail 10 - fig. 1): the boiler will only deliver domestic hot water. The antifreeze system remains activated.

To deactivate the Summer mode, press the **summer/winter** button (detail 6 - fig. 1) again for 2 seconds.

Heating temperature setting

Use the heating buttons (detail 3 - fig. 1) to adjust the temperature from a min. of 30°C to a max. of 85°C; it is advisable not to operate the boiler below 45°C.

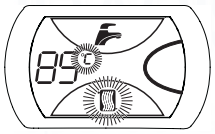

fig. 4

Hot water temperature adjustment

Use the DHW buttons (detail 1 - fig. 1) to adjust the temperature from a min. of 40°C to a max. of 55°C.

fig. 5

Room temperature adjustment (with optional room thermostat)

Using the room thermostat, set the temperature required in the rooms. If the room thermostat is not installed, the boiler will keep the system at the set system delivery setpoint temperature.

Room temperature adjustment (with optional remote timer control)

Using the remote timer control, set the required temperature in the rooms. The boiler will adjust the system water according to the required room temperature. For operation with remote timer control, please refer to the relevant instruction manual.

ECO/COMFORT selection

The unit has a function that ensures a high domestic hot water delivery speed and maximum comfort for the user. When the device is activated (COMFORT mode), the water contained in the boiler is kept hot, therefore ensuring immediate availability of hot water on opening the tap, without waiting times.

The device can be deactivated by the user (ECO mode) by pressing the **eco/comfort** button (detail 7 - fig. 1) with the boiler in standby mode. In ECO mode the display activates the ECO symbol (detail 12 - fig. 1). To activate COMFORT mode, press the **eco/comfort** button (detail 7 - fig. 1) again.

Adjustments from Remote Timer Control

If the Remote Timer Control (optional) is connected to the boiler, the above adjustments are managed according to that given in table 1.

Table. 1

Heating temperature setting	Adjustment can be made from the Remote Timer Control menu and the boiler control panel.
Hot water temperature adjustment	Adjustment can be made from the Remote Timer Control menu and the boiler control panel.
Summer/Winter Switchover	Summer mode has priority over a possible Remote Timer Control heating demand.
Eco/Comfort selection	Adjustment can only be made from the boiler control panel.

Water system pressure regulation

The filling pressure read on the boiler water gauge with the system cold must be approx 1.0 bar. If the system pressure falls to values below minimum, the boiler stops and fault **F37** is displayed.

3. INSTALLATION

3.1 General Instructions

This unit must only be used for its intended purpose. This unit is designed to heat water to a temperature below boiling point and must be connected to a heating system and/or a water supply system for domestic use, compatible with its performance, characteristics and its heating capacity. Any other use is deemed improper.

BOILER INSTALLATION MUST ONLY BE CARRIED OUT BY QUALIFIED PERSONNEL, IN ACCORDANCE WITH ALL THE INSTRUCTIONS GIVEN IN THIS TECHNICAL MANUAL, THE PROVISIONS OF CURRENT LAW, THE PRESCRIPTIONS OF THE TECHNICAL STANDARDS (BS), ANY LOCAL REGULATIONS AND THE RULES OF PROPER WORKMANSHIP.

Incorrect installation can cause damage or injury for which the manufacturer declines any responsibility.

Installation of this unit must be carried out in strict compliance with the present instructions and the following regulations applicable in Great Britain.

Gas Safety Regulations (Installations & Use).

Local Building Regulations..

The Building Regulations (Part L).

The Buildings Standards (Scotland - Consolidated) Regulations. British Standards Codes of Practice (BSI):

B.S.	5440	Detail 1	Flues
B.S.	5440	Detail 2	Air supply and ventilation
B.S.	5449	.....	Systems for hot water production with forced circulation
B.S.	6798	.....	Installation of gas-fired boilers for hot water
B.S.	6891	.....	Gas systems
B.S.	7671	.....	IEE wiring system regulations
B.S.	4814	.....	Specifications for expansion tanks
B.S.	5482	.....	LPG systems
B.S.	7593	.....	Water treatment in central heating systems for domestic hot water production
B.S.	5546	.....	Installation of systems for domestic hot water production

Model Water By-Laws

B.S.	5955-8	.....	Installation of plastic pipes

For Northern Ireland, observe the current applicable regulations.

Safe handling of materials

Pay attention when handling the boiler insulation panels because the material they are made of could irritate the skin. No part of the boiler contains asbestos, mercury or CFC's.

Advice for transport and handling

For lifting and transport always take suitable safety precautions: keep your back straight, bend knees, do not turn your body, move feet, avoid bending forward or sideways and keep the load as close as possible to your body.

If possible, use a trolley or other suitable means to carry the boiler.

Grip the boiler firmly and, before lifting it, try and find the point where the load is concentrated in order to establish the centre of gravity and suitably reposition yourself.

3.2 Place of installation

The combustion circuit is sealed with respect to the place of installation room, therefore the unit can be installed in any room. However, the place of installation must be adequately ventilated to prevent the creation of dangerous conditions in case of even small gas leaks. This safety regulation is laid down by EEC Directive no. 90/396 for all gas units, including those with sealed chamber.

The unit is suitable for operation in a partially protected place in conformity with EN 297/A6, with minimum temperature -5°C. If equipped with the special antifreeze kit, it can be used with minimum temperatures to -15°C. The boiler must be installed is a protected place, e.g. under the slope of a roof, inside a balcony or in a sheltered recess.

The place of installation must in any case be free of dust, flammable materials or objects or corrosive gases.

The boiler is arranged for wall mounting and comes standard with a hooking bracket. The wall fixing must ensure a stable and effective support for the generator.

If the unit is enclosed in a cabinet or mounted alongside, a space must be provided for removing the casing and for normal maintenance operations

3.3 Plumbing connections

Important

The heating capacity of the unit must be previously established by calculating the building's heat requirement according to the current regulations. To ensure proper operation and long boiler life, the plumbing system must be adequately sized and complete with all the necessary accessories, including a room thermostat, a thermostattable valve (TRV) etc. The system delivery and return pipes must have a diameter of at least 22 mm for the first 3 m of length from the unit.

If the system delivery and return pipes follow a path where air pockets can form in certain places, it is advisable to install vent valves at these points. Also, type "A" drain cocks must be installed at the lowest points in the system to allow complete emptying.

An automatic bypass with flow rate of at least 6 l/min. must be installed (connected as far away as possible from the boiler) if radiators with thermostatic valves have been connected.

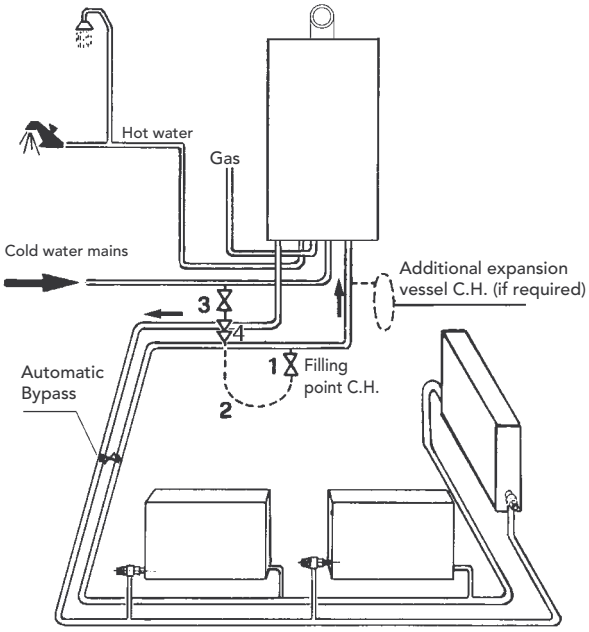

fig. 6 - Automatic bypass connection

The temperature drop between the delivery manifold and the return to the boiler should not exceed 20°C.

Do not use the water system pipes to earth electrical appliances.

Before installation, carefully wash all the pipes of the heating system to remove any residuals or impurities that could affect proper operation of the unit (as required by BS 7593 Building regs Doc L).

Carry out the connections to the unit as indicated in fig. 7.

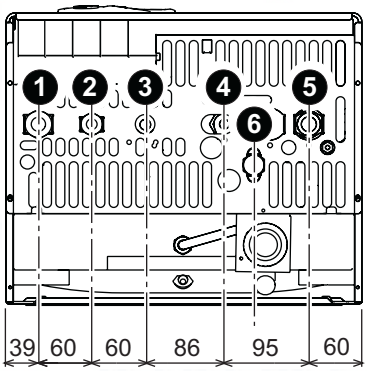

fig. 7 - Water connections

Shutoff valve kit

Make sure to install the shutoff valves (supplied) between the boiler and the heating system, allowing the boiler to be isolated from the system if necessary.

The safety valve outlet must be connected to a copper pipe of 15 mm diameter with continuous fall from the boiler to run off the system water in case of overpressure in the heating circuit. Otherwise, if the discharge valve cuts in and floods the room, the boiler manufacturer cannot be held liable. The drain must be run to the outside of the building to avoid the risk of damage or injury due to the hot water in case of overpressure in the system.

Make the boiler connection in such a way that its internal pipes are free of stress. If a non-return valve is installed also on the DHW circuit (if provided for), it is necessary to install a safety valve between the boiler and the circuit (with the non-return valve at least 3 m from the boiler) or an expansion tank for domestic use.

For installation, follow the instructions contained in the kit.

Replenishing water

It is necessary to provide for replenishing of the water lost by the sealed system. Refer to **standard BS6798** for the methods of filling and replenishing water in sealed systems. There must not be a direct connection between the central heating system of the boiler and the water mains. For the use of water coming from the water mains and direct pressurisation of the system, refer to the local water management by-laws. This connection must be interrupted after use.

The boiler comes standard with the connection (filling loop) shown in fig. 8. For installation, follow the instructions given on the instruction sheet enclosed with the kit

To replenish the water in the system:

- Fix the removable **connection "1"** between the two valves.
- Open the two cocks **"2 and 3"** until the pressure read on the water gauge is approx. 1 bar.
- Close the two cocks **"2 and 3"**.
- At the end of the operation, remove the removable connection **"1"**.

Reference is made to the provisions contained in the water management by-laws.

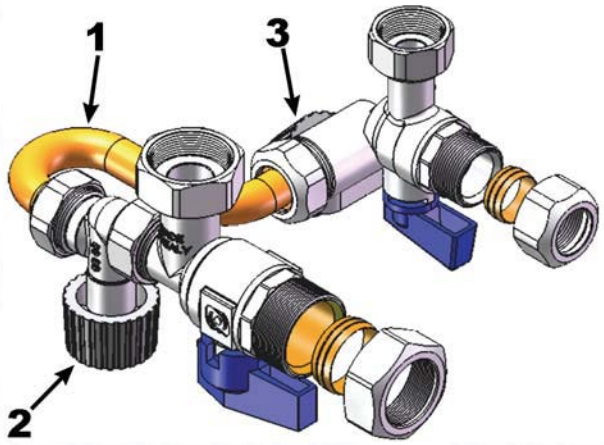

fig. 8 - Filling loop

Water treatment

If water treatment is necessary, Ferroli recommends the exclusive use of specific products such as Fernox or Sentinel to be applied according to the producer's instructions. For further information, please contact:

Fernox Manufacturing Co. LTD.
Cookson Electronics, Forsyth Road
Sheerwater, Woking, Surrey, GU21 5RZ
Tel.: 0870 8700362

Sentinel Performance Solutions Ltd
The Heath Business & Technical Park
Runcorn, Cheshire WA7 4QX
Tel.: 0151 424 5351

If the boiler is installed in an existing system, any unsuitable additives must be removed by thoroughly cleaning the system. Cleaning of all the systems must be done in compliance with the requirements of standard B.S. 7593.

In areas with hard water, treatment may be necessary in order to prevent scale from forming in the boiler.

Make sure to use the water treatment product in the right concentration, according to the producer's instructions.

3.4 Gas connection

The gas must be connected to the relevant connection (see fig. 7) in conformity with current standards, with a rigid metal pipe or with a continuous surface flexible s/steel tube, installing a gas cock between the system and boiler. Make sure all the gas connections are tight.

3.5 Electrical connections

The unit must be connected to an efficient earthing system in accordance with current safety standards. Have the efficiency and suitability of the earthing system checked by professionally qualified personnel; the Manufacturer declines any liability for damage caused by failure to earth the system.

The boiler is prewired and provided with a "Y" type cable (without plug) for connection to the electric line. The connections to the grid must be made with a permanent connection and equipped with a double-pole switch with contact opening of at least 3 mm, installing fuses of max. 3A between the boiler and the line. Make sure to respect the polarities (LINE: brown wire / NEUTRAL: blue wire / EARTH: yellow/green wire) in connections to the electric line.

The user must not replace the unit's power cable. If damaged, switch off the unit and have the cable replaced only by professionally qualified personnel. If replacing the power cable, only use **"HAR H05 VV-F"** 3x0.75 mm2 cable with max. outside diameter of 8 mm.

Room thermostat (optional)

IMPORTANT: THE ROOM THERMOSTAT MUST HAVE VOLTAGE-FREE CONTACTS. CONNECTING 230V TO THE ROOM THERMOSTAT TERMINALS WILL PERMANENTLY DAMAGE THE PCB.

When connecting a time control or timer, do not take the power supply for such devices from their cutoff contacts. Their power supply must be taken with a direct connection from the mains or with batteries, depending on the type of device.

Accessing electrical terminal block

Follow the instructions given in fig. 9 to access the electrical connection terminal block. The layout of the terminals for the various connections is also given in the wiring diagram in fig. 21.

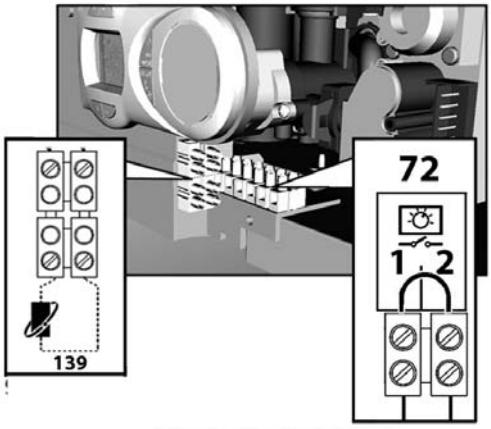

fig. 9 - Accessing the terminal block

3.6 Fume ducts

Important

The unit is "type C" with sealed chamber and forced draught; the air inlet and fume outlet must be connected to one of the following extraction/suction systems. Before installation, check and carefully observe the above prescriptions. Also, comply with the provisions concerning the positioning of wall and/or roof terminals and the minimum distances from windows, walls, vents, etc.

Expansion

For fume exhaust pipes longer than 1 metre, during installation take in account the natural expansion of the materials when the boiler is operating.

To prevent any deformation, leave an expansion space of approx. 2 ÷ 4 mm for every metre of pipe.

Baffles

Boiler operation requires fitting the baffles supplied with the unit, according to that given in the following tables.

Before inserting the fume exhaust pipe, check the presence of the right baffle (when it is to be used) and that it is correctly positioned. The boilers are fitted standard with the smallest diameter baffle. To replace the baffle (ref. 1 - fig. 10), proceed as indicated in fig. 10.

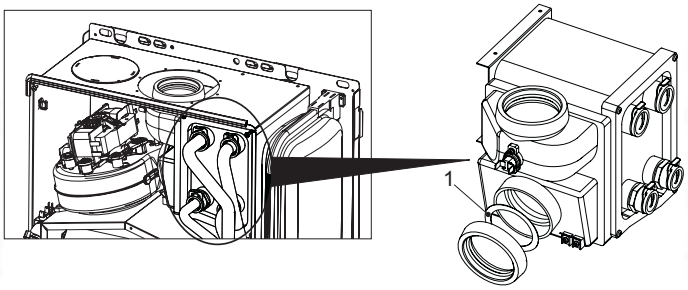

fig. 10

Connection with coaxial pipes

Standard coaxial installation

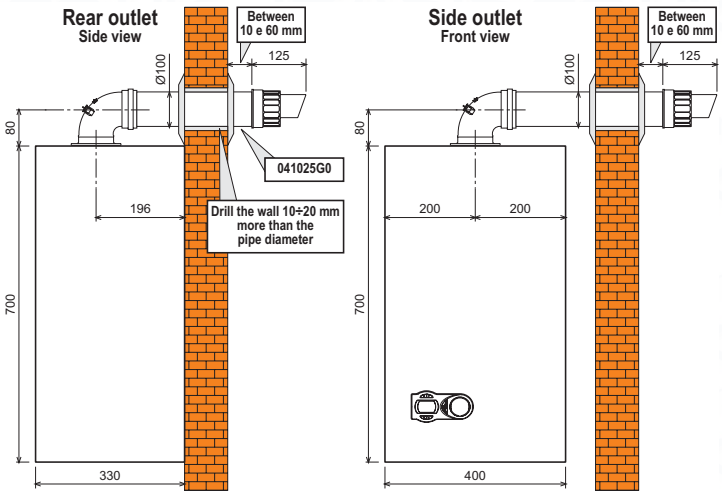

fig. 11 - Standard coaxial installation

Other connections coaxial

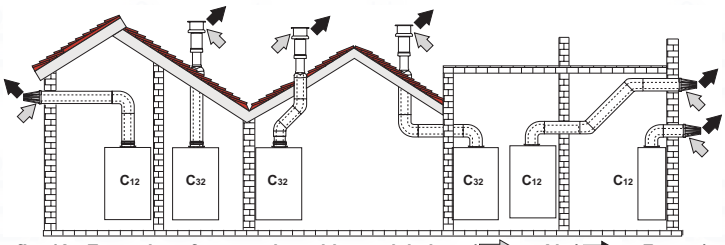

fig. 12 - Examples of connection with coaxial pipes (⇨ = Air / ➡ = Fumes)

For coaxial connection, fit the unit with one of the following starting accessories. For the wall hole dimensions, refer to the figure on the cover. Anyhorizontal sections of the fume exhaust must be kept slopingslightly towards the outside, to prevent possible condensate from flowing back towards the unit.

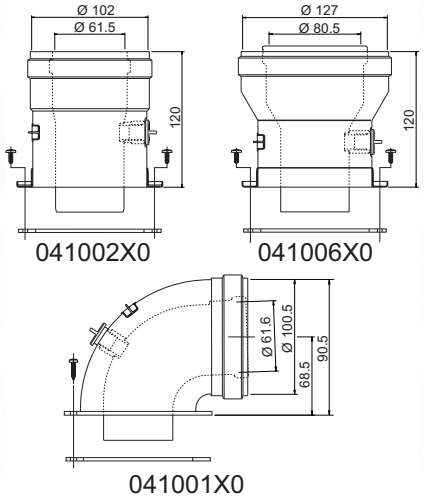

fig. 13 - Starting accessory for coaxial ducts

Table. 2 - Baffles for coaxial ducts

	Coaxial 60/100		Coaxial 80/125	
Max. permissible length	**6 m**		**12 m**	
Reduction factor 90° bend	1 m		0.5 m	
Reduction factor 45° bend	0.5 m		0.25 m	
Baffle to use	0 ÷ 2 m	Ø 45	0 ÷ 6 m	Ø 45
	2 ÷ 4 m	Ø 50	6 ÷ 12 m	no baffle
	4 ÷ 6 m	no baffle		

Connection with separate pipes

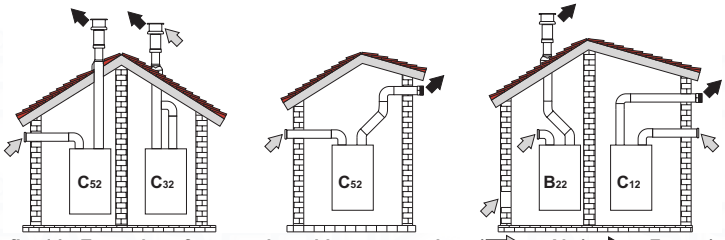

fig. 14 - Examples of connection with separate pipes (⇨ = Air / ➡ = Fumes)

For the connection of separate ducts, fit the unit with the following starting accessory:

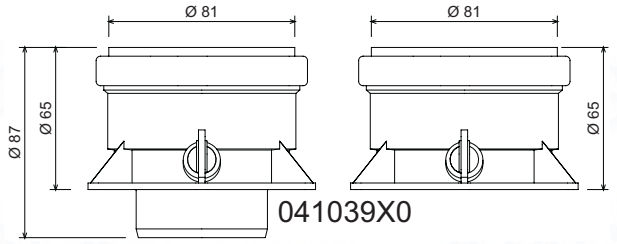

fig. 15 - Starting accessory for separate ducts

Before proceeding with installation, check the baffle to be used and make sure the maximum permissible length has not been exceeded, by means of a simple calculation:

1. Completely establish the layout of the system of split flues, including accessories and outlet terminals.
2. Consult the table 4 and identify the losses in m_{eq} (equivalent metres) of every component, according to the installation position.
3. Check that the sum total of losses is less than or equal to the maximum permissible length in table 3.

Table. 3 - Baffles for separate ducts

	Separate ducts	
Max. permissible length	55 m_{eq}	
Baffle to use	0 ÷ 15 m_{eq}	Ø 45
	15 ÷ 35 m_{eq}	Ø 50
	35 ÷ 55 m_{eq}	No baffle

Table. 4 - Accessories

				Losses in m_{eq}		
				Air inlet	Fume exhaust	
					Vertical	Horizontal
Ø 80	**PIPE**	1 m M/F	1KWMA83W	1.0	1.6	2.0
	BEND	45° M/F	1KWMA65W	1.2	1.8	
		90° M/F	1KWMA01W	1.5	2.0	
	PIPE SECTION	with test point	1KWMA70W	0.3	0.3	
	TERMINAL	air, wall	1KWMA85A	2.0	-	
		fumes, wall with antiwind	1KWMA86A	-	5.0	
	FLUE	Split air/fumes 80/80	1KWMA84U	-	12.0	

3.7 Condensate drain connection

The boiler is equipped with an internal trap for condensate draining. Fit the inspection union **A** and the flexible tube **B**, pressing it on about 3 cm. Fill the trap with approx. 0.5 l of water and connect the flexible tube to the drainage system.

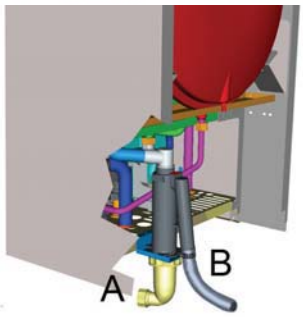

fig. 16 - Condensate drain connection

4. SERVICE AND MAINTENANCE

4.1 Adjustments

Gas conversion

The unit can operate on natural gas or LPG and is factory-set for use with one of these two gases, as clearly shown on the packing and on the dataplate. Whenever a different gas to that for which the unit is preset has to be used, a conversion kit will be required, proceeding as follows:

1. Replace the nozzles at the main burner, fitting the nozzles specified in the technical data table in cap. 5, according to the type of gas used
2. Modify the parameter for the type of gas:
   - put the boiler in standby mode
   - press the **reset** button (detail 6 - fig. 1) for 10 seconds: the display shows "**TS**" flashing
   - press the **reset** button (detail 6 - fig. 1): the display shows "**P01**".
   - Press the DHW buttons (detail 1 - fig. 1) to set parameter 00 (for operation with natural gas) or 01 (for operation with LPG).
   - Press the **reset** button (detail 6 - fig. 1) for 10 seconds.
   - the boiler will return to standby mode
3. Adjust the minimum and maximum pressures at the burner (ref. relevant section), setting the values given in the technical data table for the type of gas used
4. Apply the sticker contained in the conversion kit, near the dataplate as proof of the conversion.

TEST mode activation

Press the heating buttons (detail 3 - fig. 1) at the same time for 5 seconds to activate the **TEST** mode. The boiler lights at the maximum heating power set as described in the following section.

The heating and DHW symbols (fig. 17) flash on the display; the heating power will be displayed alongside.

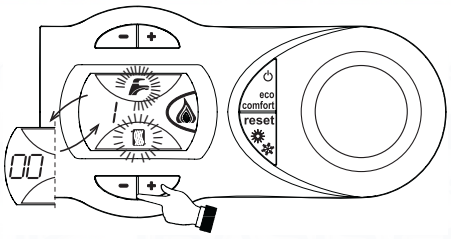

fig. 17 - TEST mode (heating power = 100%)

To deactivate the TEST mode, repeat the activation sequence.

The TEST mode is automatically disabled in any case after 15 minutes.

Adjustment of pressure at burner

Since this unit has flame modulation, there are two fixed pressure values: the minimum and maximum, which must be those given in the technical data table according to the type of gas.

- Connect a suitable pressure gauge to pressure point **"B"** downstream of the gas valve.
- Disconnect the pressure compensation tube **"N"**.
- Remove the protection cap "D".
- Operate the boiler in TEST **mode**.
- Adjust the maximum pressure by turning the screw **"G"** clockwise to increase the pressure and anticlockwise to decrease it.
- Disconnect one of the two fastons **"C"** from the modureg **"F"** on the gas valve.
- Adjust the minimum pressure by turning the screw **"E"** clockwise to increase the pressure and anticlockwise to decrease it.
- Turn the burner on and off, checking that the minimum pressure remains stable.
- Reconnect the faston **"C"** detached from the modureg **"F"** on the gas valve
- Check that the maximum pressure has not changed
- Reconnect the pressure compensation tube **"N"**.
- Refit the protection cap **"D"**.
- To end the **TEST** mode, repeat the activation sequence or wait 15 minutes.

After checking or adjusting the pressure, make sure to seal the adjustment screw with paint or a specific seal.

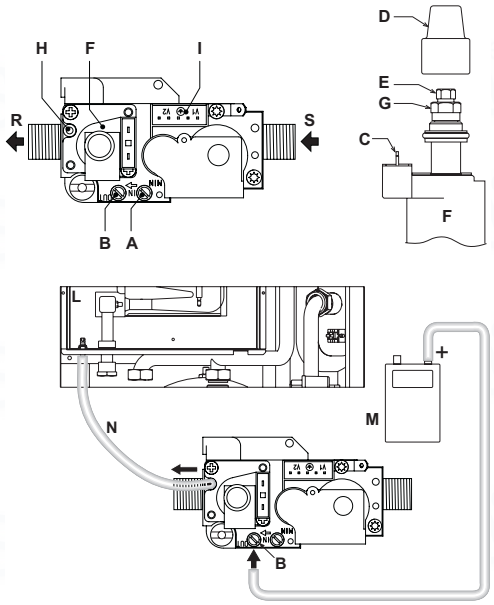

fig. 18 - Gas valve

A	Upstream pressure point
B	Downstream pressure point
C	Modureg electrical connection
D	Protection cap
E	Minimum pressure adjustment
F	Modureg
G	Minimum pressure adjustment
H	Compensation tube connection
I	Gas valve electrical connection
L	Sealed chamber
M	Pressure gauge
N	Compensation tube
R	Gas outlet
S	Gas inlet

Heating power adjustment

To adjust the heating power, switch the boiler to TEST mode (see sec. 4.1). Press the heating buttons detail 3 - fig. 1 to increase or decrease the power (min. = 00 - max. = 100). Press the **reset** button within 5 seconds and the max. power will remain that just set. Exit TEST mode (see sec. 4.1).

Lighting power adjustment

To adjust the lighting power, switch the boiler to TEST mode (see sec. 4.1). Press the DHW buttons (detail 1 - fig. 1) to increase or decrease the power (min. = 00 - max. = 60). Press the **reset** button within 5 seconds and the lighting power will remain that just set. Exit TEST mode (see sec. 4.1).

4.2 Startup

Before lighting the boiler

- Check the seal of the gas system.
- Check correct prefilling of the expansion tank.
- Fill the water system and make sure all air contained in the boiler and the system has been vented.
- Make sure there are no water leaks in the system, DHW circuits, connections or boiler.
- Check correct connection of the electrical system and efficiency of the earthing system.
- Make sure the gas pressure for heating is that required.
- Make sure there are no flammable liquids or materials in the immediate vicinity of the boiler

Checks during operation

- Switch the unit on.
- Check the tightness of the fuel circuit and water systems.
- Check the efficiency of the flue and air/fume ducts while the boiler is working.
- Make sure the water is circulating properly between the boiler and the systems.
- Make sure the gas valve modulates correctly in the heating and domestic hot water production stages.
- Check correct boiler lighting by performing various tests, turning it on and off with the room thermostat or remote control.
- Make sure the fuel consumption indicated on the meter matches that given in the technical data table in cap. 5.
- Make sure that with no demand for heating, the burner lights correctly on opening a hot water tap. Check that in heating mode, on opening a hot water tap, the heating circulating pump stops and there is regular production of hot water.
- Make sure the parameters are programmed correctly and carry out any required customisation (compensation curve, power, temperatures, etc.).

4.3 Maintenance

Periodical check

To ensure correct operation of the unit over time, have qualified personnel carry out a yearly check, providing for the following:

- The control and safety devices (gas valve, flow meter, thermostats, etc.) must function correctly.
- The fume exhaust circuit must be perfectly efficient.
  (Sealed chamber boiler: fan, pressure switch, etc. -The sealed chamber must be tight: seals, cable glands, etc.)
  (Open chamber boiler: anti-backflow device, fume thermostat, etc.)
- The air/fume terminal and ducts must be free of obstructions and leaks
- The burner and exchanger must be clean and free of deposits. Do not use chemical products or wire brushes for cleaning.
- The electrode must be free of scale and properly positioned.
- The gas and water systems must be tight.
- The water pressure in the system when cold must be approx. 1 bar; otherwise bring it to that value.
- The circulating pump must not be blocked.
- The expansion tank must be filled.
- The gas flow and pressure must match that given in the respective tables.

4.4 Troubleshooting

Diagnostics

The boiler is equipped with an advanced self-diagnosis system. In case of a boiler fault, the display will flash together with the fault symbol (detail 11 - fig. 1) indicating the fault code.

There are faults that cause permanent shutdown (marked with the letter "**A**"): to restore operation, press the RESET button (detail 6 - fig. 1) for 1 second or RESET on the optional remote timer control if installed; if the boiler fails to start, it is necessary to eliminate the fault.

Faults marked with the letter "**F**" cause temporary shutdowns that are automatically reset as soon as the value returns within the boiler's normal working range.

Table of faults

Table. 5 - Fault list

Fault code	Fault	Possible cause	Cure
A01	No burner ignition	Excessive condensate level	Empty / clean the trap
		No gas	Check the regular gas flow to the boiler and that the air has been eliminated from the pipes
		Ignition/detection electrode fault	Check the wiring of the electrode and that it is correctly positioned and free of any deposits
		Faulty gas valve	Check the gas valve and replace it if necessary
A02	Flame present signal with burner off	Electrode fault	Check the ionisation electrode wiring
		Card fault	Check the card
A03	Overtemperature protection activation	Heating sensor damaged	Check the correct positioning and operation of the heating sensor
		No water circulation in the system	Check the circulating pump
		Air in the system	Vent the system
F05	Air pressure switch (fails to close contacts within 20 sec. of fan activation)	Air pressure switch contact open	Check the pressure switch / Fan / Fan socket
		Incorrect air pressure switch wiring	Check the wiring
		Wrong baffle	Check correct Ø
		Flue obstructed or not correctly sized	Check the length of the flues / Clean the flues
	Air pressure switch (fails to close contacts within 20 sec. of fan activation) due to activation of the fume thermostat	Exchangers dirty (clogged on water side)	Clean the exchangers
		Faulty water circulation	
A06	No flame after the ignition stage	Low pressure in the gas system	Check the gas pressure
		Burner minimum pressure setting	Check the gas pressures
F10	Delivery sensor 1 fault	Sensor damaged	Check the wiring or replace the sensor
		Wiring shorted	
		Wiring disconnected	
F11	DHW sensor fault	Sensor damaged	Check the wiring or replace the sensor
		Wiring shorted	
		Wiring disconnected	

Fault code	Fault	Possible cause	Cure
F14	Delivery sensor 2 fault	Sensor damaged Wiring shorted Wiring disconnected	Check the wiring or replace the sensor
A15	Air pressure switch (fails to close contacts within 20 sec. of fan activation)	Fault **F05** generated 5 times in the last 24 hours	See fault **F05**
F34	Supply voltage under 170V.	Electric mains trouble	Check the electrical system
F35	Faulty mains frequency	Electric mains trouble	Check the electrical system
F37	Incorrect system water pressure	Pressure too low	Fill the system
		Water pressure switch damaged or not connected	Check the sensor
A41	Sensor positioning	Delivery sensor or DHW sensor detached from the pipe	Check the correct positioning and operation of the sensors
F42	Heating sensor fault	Sensor damaged	Replace the sensor
F43	Exchanger protection activation.	No system H_2O circulation	Check the circulating pump
		Air in the system	Vent the system
F50	Modureg fault	Wiring disconnected	Check the wiring / Gas valve

5. TECHNICAL DATA AND CHARACTERISTICS

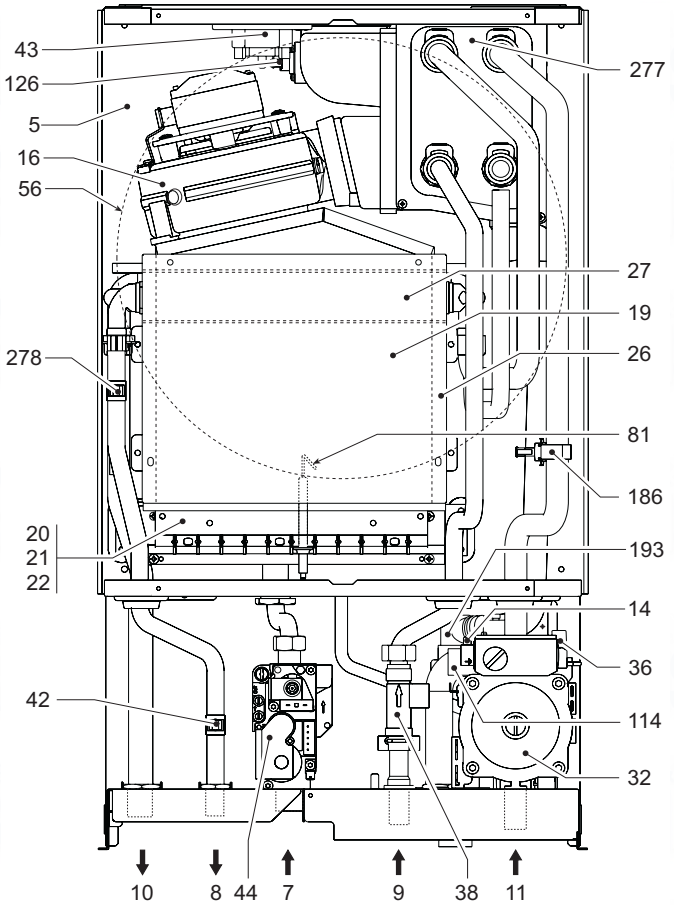

fig. 19 - General view

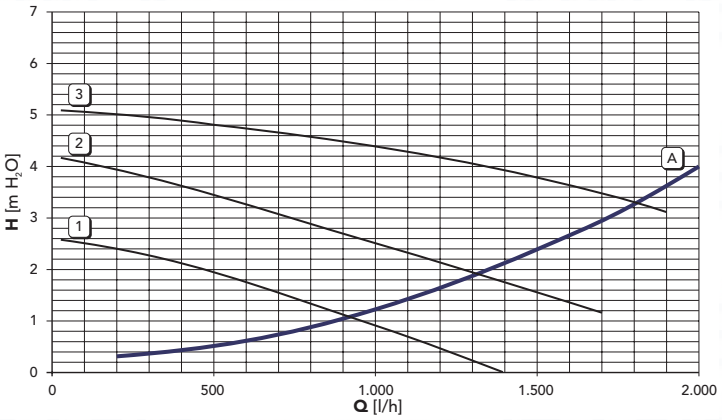

fig. 20 - Circulating pumps Head/Pressure losses

A = Boiler pressure losses - **1, 2 and 3 =** Circulating pump speed

Important: Before connecting the **room thermostat** or the **remote timer control**, remove the jumper on the terminal block.

Date	Unit	DOMIcondens F 24	DOMIcondens F 28	
Max. heating capacity	kW	23.7	28.0	(Q)
Min. heating capacity	kW	10.0	10.0	(Q)
Max. Heat Output in heating (80/60°C)	kW	22.9	27	(P)
Min. Heat Output in heating (80/60°C)	kW	9.2	9.2	(P)
Max. Heat Output in heating (50/30°C)	kW	24.5	29	
Min. Heat Output in heating (50/30°C)	kW	9.6	9.6	
Max. Heat Output in hot water production	kW	23.1	27.3	
Min. Heat Output in hot water production	kW	9.2	9.2	
Burner nozzles G20	no. x Ø	11 x 1.35	11 x 1.35	
Gas supply pressure G20	mbar	20	20	
Max. pressure at burner G20	mbar	10	13.5	
Min. pressure at burner G20	mbar	2	2	
Max. gas delivery G20	m^3/h	2.64	2.96	
Min. gas delivery G20	m^3/h	1.06	1.06	
Burner nozzles G31	no. x Ø	11 x 0.82	11 x 0.82	
Gas supply pressure G31	mbar	37	37	
Max. pressure at burner G31	mbar	29	35	
Min. pressure at burner G31	mbar	5	5	
Max. gas delivery G31	kg/h	1.96	2.19	
Min. gas delivery G31	kg/h	0.78	0.78	
Efficiency class Directive 92/42 EEC	-	★★★★		
NOx emission class	-	3	3	(NOx)
Max. working pressure in heating	bar	3	3	(PMS)
Min. working pressure in heating	bar	0.8	0.8	
Max. heating temperature	°C	90	90	(tmax)
Heating water content	litres	1.5	1.5	
Heating expansion tank capacity	litres	8	8	
Heating expansion tank prefilling pressure	bar	1	1	
Max. working pressure in hot water production	bar	9	9	(PMW)
Min. working pressure in hot water production	bar	0.25	0.25	
DHW flowrate Dt 25°C	l/min	14	15.7	
DHW flowrate Dt 30°C	l/min	11.6	13	
DHW flowrate Dt 35°C	l/min	10	11.2	
Protection rating	IP	X5D	X5D	
Power supply voltage	V/Hz	230V/50Hz	230V/50Hz	
Electrical power input	W	135	135	
Electrical power input in hot water production	W	135	135	
Empty weight	kg	35	35	
Type of unit		C12-C22-C32-C42-C52-C62-C72-C82-B22		
PIN CE		0461BU0942		

Key of figures cap. 5

5 Sealed chamber
7 Gas inlet
8 Domestic hot water outlet
9 Cold water inlet
10 System delivery
11 System return
14 Safety valve
16 Fan
19 Combustion chamber
20 Burner assembly
21 Main nozzle
22 Burner
26 Combustion chamber insulation
27 Copper exchanger for heating and hot water
32 Heating circulating pump
36 Automatic air vent
38 Flow switch
42 DHW temperature sensor
43 Air pressure switch
44 Gas valve
47 Modureg
56 Expansion tank
72 Room thermostat
81 Ignition and detection electrode
114 Water pressure switch
126 Contact fume thermostat
139 Remote timer control
186 Return sensor
193 Trap
277 Condensing recuperator
278 Double sensor (Safety + Heating)

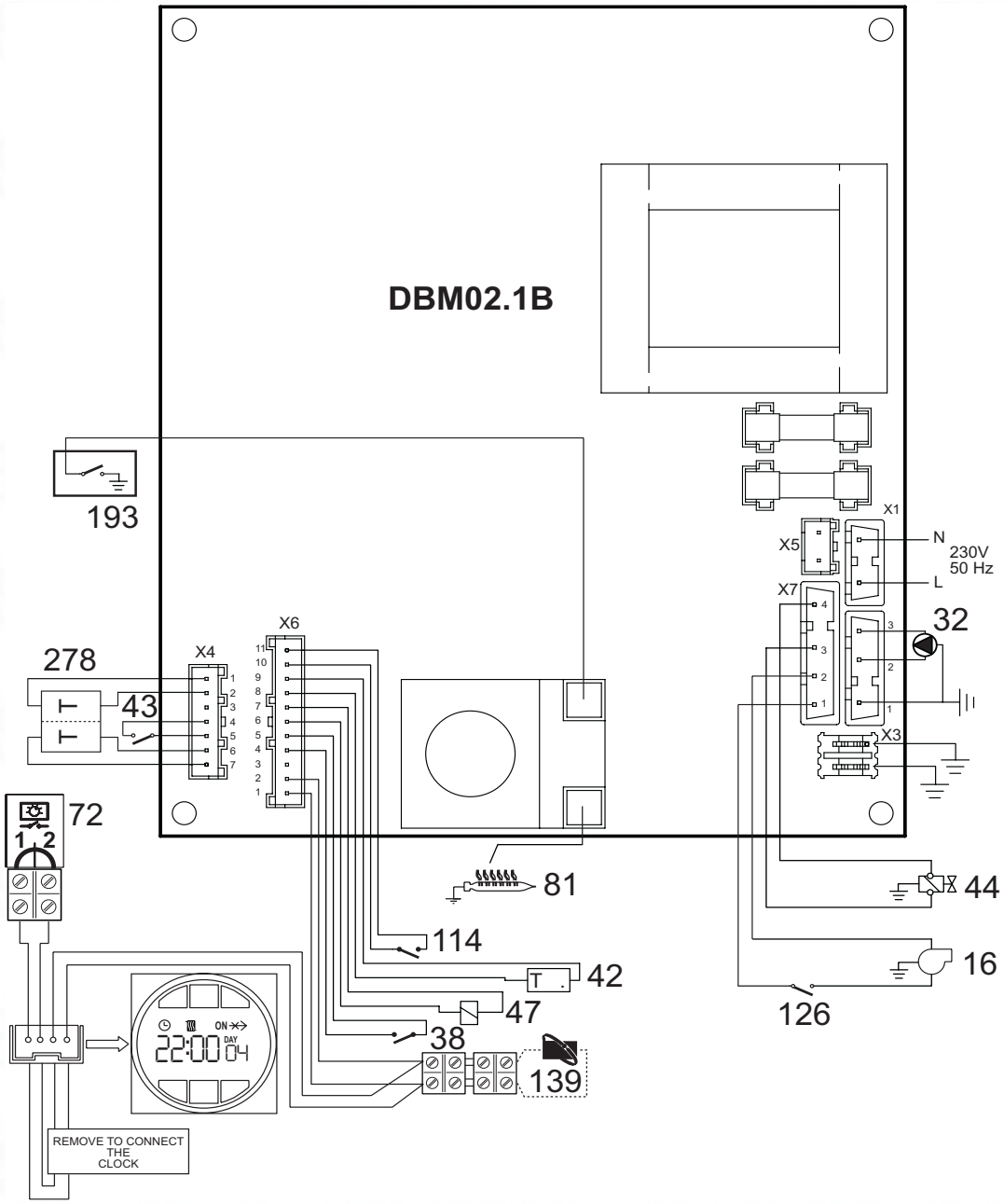

fig. 21 - Wiring diagram

spares & parts online
IBASIS.CO.UK®

BENCHMARK No. 2 6 7 _ _ _

Please add the first 4 digits of the Boiler serial No to complete the BENCHMARK No.

benchmark™ COLLECTIVE MARK

GAS BOILER COMMISSIONING CHECKLIST

BOILER SERIAL No. _____ **NOTIFICATION No.** _____

CONTROLS *To comply with the Building Regulations, each section must have a tick in one or other of the boxes*

TIME & TEMPERATURE CONTROL TO HEATING	ROOM T/STAT & PROGRAMMER/TIMER	☐	PROGRAMMABLE ROOMSTAT	☐
TIME & TEMPERATURE CONTROL TO HOT WATER	CYLINDER T/STAT & PROGRAMMER/TIMER	☐	COMBI BOILER	☐
HEATING ZONE VALVES	FITTED	☐	NOT REQUIRED	☐
HOT WATER ZONE VALVES	FITTED	☐	NOT REQUIRED	☐
THERMOSTATIC RADIATOR VALVES	FITTED	☐		
AUTOMATIC BYPASS TO SYSTEM	FITTED	☐	NOT REQUIRED	☐

FOR ALL BOILERS CONFIRM THE FOLLOWING

THE SYSTEM HAS BEEN FLUSHED IN ACCORDANCE WITH THE BOILER MANUFACTURER'S INSTRUCTIONS? ☐

THE SYSTEM CLEANER USED

THE INHIBITOR USED

FOR THE CENTRAL HEATING MODE, MEASURE & RECORD

GAS RATE		m^3/hr		ft^3/hr
BURNER OPERATING PRESSURE (IF APPLICABLE)	☐	N/A		mbar
CENTRAL HEATING FLOW TEMPERATURE				°C
CENTRAL HEATING RETURN TEMPERATURE				°C

FOR COMBINATION BOILERS ONLY

HAS A WATER SCALE REDUCER BEEN FITTED? YES ☐ NO ☐

WHAT TYPE OF SCALE REDUCER HAS BEEN FITTED?

FOR THE DOMESTIC HOT WATER MODE, MEASURE & RECORD

GAS RATE		m^3/hr		ft^3/hr
MAXIMUM BURNER OPERATING PRESSURE (IF APPLICABLE)	☐	N/A		mbar
COLD WATER INLET TEMPERATURE				°C
HOT WATER OUTLET TEMPERATURE				°C
WATER FLOW RATE				lts/min

FOR CONDENSING BOILERS ONLY CONFIRM THE FOLLOWING

THE CONDENSATE DRAIN HAS BEEN INSTALLED IN ACCORDANCE WITH THE MANUFACTURER'S INSTRUCTIONS? YES ☐

FOR ALL INSTALLATIONS CONFIRM THE FOLLOWING

THE HEATING AND HOT WATER SYSTEM COMPLIES WITH CURRENT BUILDING REGULATIONS ☐

THE APPLIANCE AND ASSOCIATED EQUIPMENT HAS BEEN INSTALLED AND COMMISSIONED IN ACCORDANCE WITH THE MANUFACTURER'S INSTRUCTIONS ☐

IF REQUIRED BY THE MANUFACTURER, HAVE YOU RECORDED A CO/CO_2 RATIO READING? N/A ☐ YES _____ CO/CO_2 RATIO

THE OPERATION OF THE APPLIANCE AND SYSTEM CONTROLS HAVE BEEN DEMONSTRATED TO THE CUSTOMER ☐

THE MANUFACTURER'S LITERATURE HAS BEEN LEFT WITH THE CUSTOMER ☐

COMMISSIONING ENG'S NAME PRINT _____ CORGI ID No. _____

SIGN _____ DATE _____

SERVICE INTERVAL RECORD

It is recommended that your heating system is serviced regularly
and that you complete the appropriate Service Interval Record Below.

Service Provider. Before completing the appropriate Service Interval Record below, please ensure you have carried out the service as described in the boiler manufacturer's instructions. Always use the manufacturer's specified spare part when replacing all controls

SERVICE 1 DATE
ENGINEER NAME
COMPANY NAME
TEL No.
CORGI ID CARD SERIAL No.
COMMENTS
SIGNATURE

SERVICE 2 DATE
ENGINEER NAME
COMPANY NAME
TEL No.
CORGI ID CARD SERIAL No.
COMMENTS
SIGNATURE

SERVICE 3 DATE
ENGINEER NAME
COMPANY NAME
TEL No.
CORGI ID CARD SERIAL No.
COMMENTS
SIGNATURE

SERVICE 4 DATE
ENGINEER NAME
COMPANY NAME
TEL No.
CORGI ID CARD SERIAL No.
COMMENTS
SIGNATURE

SERVICE 5 DATE
ENGINEER NAME
COMPANY NAME
TEL No.
CORGI ID CARD SERIAL No.
COMMENTS
SIGNATURE

SERVICE 6 DATE
ENGINEER NAME
COMPANY NAME
TEL No.
CORGI ID CARD SERIAL No.
COMMENTS
SIGNATURE

SERVICE 7 DATE
ENGINEER NAME
COMPANY NAME
TEL No.
CORGI ID CARD SERIAL No.
COMMENTS
SIGNATURE

SERVICE 8 DATE
ENGINEER NAME
COMPANY NAME
TEL No.
CORGI ID CARD SERIAL No.
COMMENTS
SIGNATURE

SERVICE 9 DATE
ENGINEER NAME
COMPANY NAME
TEL No.
CORGI ID CARD SERIAL No.
COMMENTS
SIGNATURE

SERVICE 10 DATE
ENGINEER NAME
COMPANY NAME
TEL No.
CORGI ID CARD SERIAL No.
COMMENTS
SIGNATURE

FERROLI TECHNICAL HELPLINE - 08707 282 885

Should you require any assistance during the installation call our Technical Service Helpline on 08707 282 885 option 1

Should you require a service engineer to visit call our service centre on 08707 282 885 option 2

Phone numbers:

Installer _____

Service Engineer _____

BECAUSE OF OUR CONSTANT ENDEAVOUR FOR IMPROVEMENT DETAILS MAY VARY SLIGHTLY FROM THOSE QUOTED IN THESE INSTRUCTIONS.

Ferroli

ALL SPECIFICATIONS SUBJECT TO CHANGE

Please note - to avoid incurring unnecessary expense, in the event of a boiler shut down, check this is not caused by lack of electricity supply, gas supply or low water pressure before calling our Customer Service Helpline.

Lichfield Road, Branston Industrial Estate, Burton Upon Trent, Staffordshire DE14 3HD
Tel. 08707 282 885 - Fax 08707 282 886

spares & parts online IBASIS.CO.UK