Ferroli

GRUPPO FERROLI

OPTIMAX HE PLUS 38 C

wall-mounted gas fired,
pre-mix
condensing combination boiler

cod. 3540I892 - 02/2009 (Rev. 00)

CE

INSTRUCTIONS FOR USE INSTALLATION AND MAINTENANCE

G.C. n° 47-267-45

IMPORTANT

- **Your "benchmark" Installation, Commissioning and Service Record Log Book is enclosed in the last pages of this manual. "This record must be completed and left with the end user".**
  Ferroli is a member of the Benchmark initiative and fully supports the aims of the programme. Benchmark has been introduced to improve the standards of installation and commissioning of central heating systems in the UK and to encourage the regular servicing of all central heating systems to ensure safety and efficiency. Please see installation and servicing guidelines.
- **"Ferroli declare that no substances harmful to health are contained in the appliance or used during the appliance manufacture".**

⚠	This symbol indicates **"Caution"** and is placed next to all safety information. Strictly follow these instructions in order to avoid danger and damage to persons, or property.
☞	This symbol calls attention to a note or important information, please read thoroughly.

⚠

- Read the warnings given in this manual thoroughly. They provide important information for safe installation, use and maintenance
- By law the instruction manual must be left with the end user.
- If the appliance is sold or transferred to another owner or if the owner moves, leaving the appliance behind, always ensure that the manual is kept with the appliance for consultation by the new owner and /or installer.
- Incorrect installation or poor maintenance absolves the manufacturer from all liability for damage to people or property.
- Installation and maintenance must be carried out in conformity with current legislation, according to the manufacturer's instructions and by qualified personnel.
- Before service or maintenance work is, carried out isolate the appliance from the mains electricity supply.
- In the event of malfunction or faulty operation, isolate the appliance. Do not attempt to repair or carry out any other operation on the appliance directly. Contact qualified personnel only.
- Repairs or the replacement of components must be carried out exclusively by qualified personnel using original spare parts only. Failure to respect the above may compromise the safety of the appliance.
- To guarantee efficient operation, the appliance must be serviced once a year by a corgi registered engineer.
- The appliance may not be used for purposes other than those for which it was explicitly designed. Any other use is considered improper and therefore dangerous.
- Incorrect installation and use or failure to follow the instructions provided by the manufacturer absolve the manufacturer from all liability for damage.
- After unpacking, check that the contents are complete and undamaged.
- Keep the packaging out of reach of children as it is potentially hazardous.
- To clean external parts, use a damp cloth moistened with soapy water if necessary. Avoid using abrasive cleaning products and solvents.

Declaration of conformity

CE

Manufacturer: FERROLI S.p.A.
Address: Via Ritonda 78/a 37047 San Bonifacio VR Italy
declares that this unit complies with the following EU directives:

- Gas Appliance Directive 90/396
- Efficiency Directive 92/42
- Low Voltage Directive 73/23 (amended by 93/68)
- Electromagnetic Compatibility Directive 89/336 (amended by 93/68)

President and Legal Representative
Cav. del Lavoro
Dante Ferroli

1. OPERATING INSTRUCTIONS 4

1.1 Introduction 4
1.2 Control panel 5
1.3 Turning ON and OFF 6
1.4 Adjustments 8
1.5 Maintenance 11
1.6 Faults 11

2. INSTALLATION 12

2.1 General Instructions 12
2.2 Boiler location 13
2.3 Boiler water connections 14
2.4 Connection to the gas system 16
2.5 Electrical Connections 16
2.6 Flue system 18
2.7 Condensate outlet connection 23

3. SERVICE AND MAINTENANCE 25

3.1 Adjustments 25
3.2 System start-up 26
3.3 Maintenance 27
3.4 Troubleshooting 29

4. TECHNICAL CHARACTERISTICS AND DATA 31

4.1 Dimensions and connections 31
4.2 General view and main components 32
4.3 Hydraulic diagram 33
4.4 Technical data table 34
4.5 Diagrams 35
4.6 Wiring diagram 36
Benchmark 38

1. OPERATING INSTRUCTIONS

1.1 Introduction

Dear Customer,

Thank you for choosing the **OPTIMAX HE PLUS 38 C**, a FERROLI wall-mounted boiler of the latest generation, featuring advanced design and cutting-edge technology.

OPTIMAX HE PLUS 38 C is a high-efficiency **condensing pre-mix** appliance for heating and hot water production with extremely low emissions, running on natural gas or LPG.

The **boiler** consists of an aluminium laminar heat exchanger providing effective condensation of the water vapour contained in the flue gases, permitting extremely high efficiency.

Above the heat exchanger, in the boiler, there is a **pre-mix burner**, with a large ceramic surface, equipped with electronic ignition and ionization flame control, which achieves extremely low emissions while ensuring high reliability and long life operation.

The boiler is totally **room sealed** from the installation room: the air needed for combustion is drawn from outside. The boiler also includes a modulating speed fan, modulating gas valve, pump, expansion vessel, safety valve, flow sensor, temperature sensors, a safety thermostat and a low water pressure switch.

Thanks to the **twin microprocessor** control and adjustment system with advanced self-diagnosis, unit operation is for the most part automatic. The power for heating is automatically governed by the control system.

The user only has to set the temperature desired inside the home by means of a room thermostat and appliance temperature control. The adjustment and control system will provide optimum operation throughout the year.

The display continuously provides information on the unit's operating status and it is easily possible to obtain additional information on the sensor temperatures, set-points, etc. or configure them. Any operating problems associated with the boiler or system is immediately signalled by the display and, if possible, corrected automatically.

1.2 Control panel

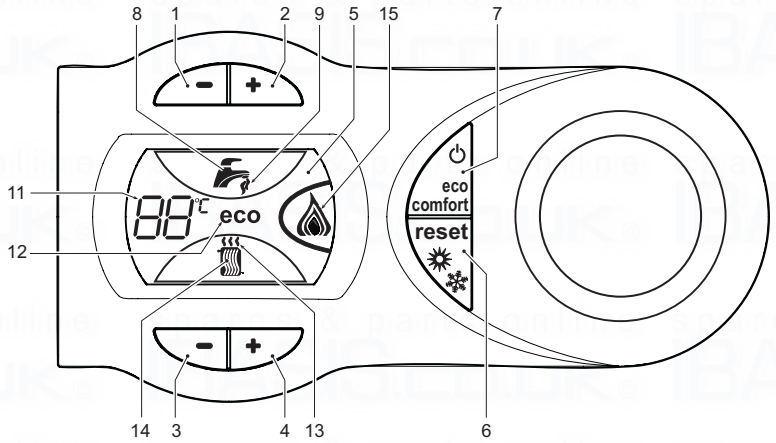

fig. 1

1 = Domestic Hot Water temperature setpoint decreasing push button
2 = Domestic Hot Water temperature setpoint increasing push button
3 = Central Heating water temperature setpoint decreasing push button
4 = Central Heating water temperature setpoint increasing push button
5 = Display LCD
6 = Reset / OTC push button
7 = Economy-Comfort / On-Off push button
8 = Domestic Hot Water symbol
9 = Domestic Hot Water mode operation
11 = Multi-function indication (Flashing during heat exchanger protection)
12 = Economy symbol
13 = Central Heating mode operation
14 = Central Heating symbol
15 = Burner on and actual load indication (Flashing during flame current supervision)

Indication during boiler operation

Central Heating mode

The Central Heating heat demand (generated by the OpenTherm Remote Control, the Room Thermostat or the Clock) is indicated by the flashing of the Hot Air symbol over the radiator (part. 13 and 14 – fig. 1). The display indicates the actual Central Heating water temperature (part. 11 – fig. 1) and during central heating off time the text “d2”.

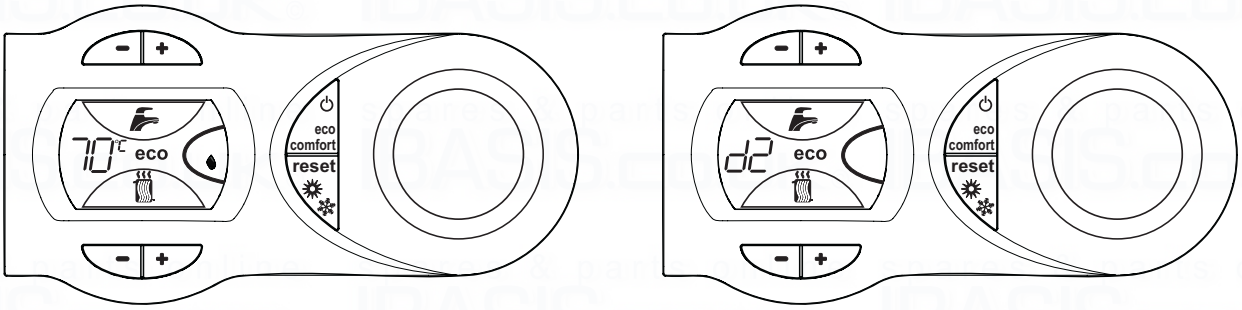

fig. 2

Domestic Hot Water mode

The Domestic Hot Water heat demand (generated by the DHW flow sensor or due to a Comfort request) is indicated by the flashing of the Hot Water symbol under the tap (part. 8 and 9 – fig. 1). The display indicates the actual Domestic Hot Water temperature (part. 11 – fig. 1) and during domestic hot water off time the text "d1".

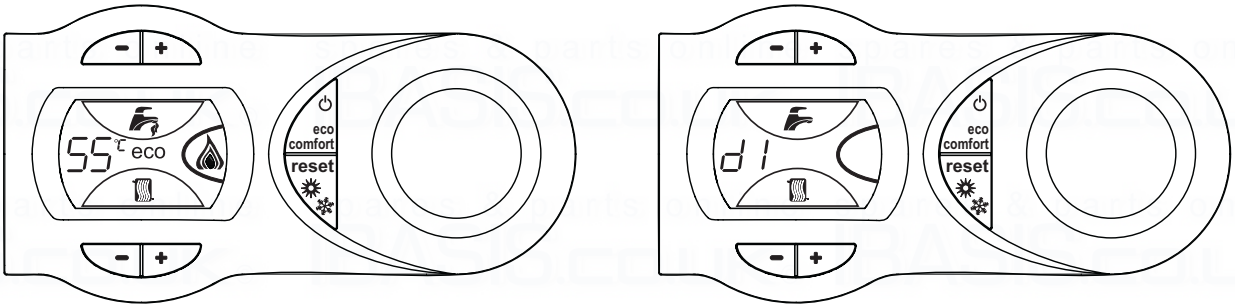

fig. 3

1.3 Turning ON and OFF

Without main power supply

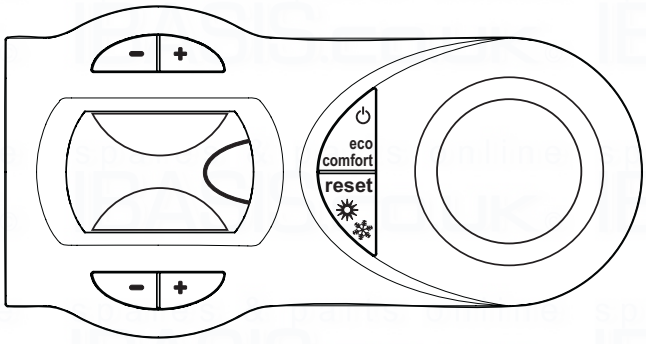

fig. 4 - Boiler without main power supply

⚠ To avoid damage caused by freezing during long shutdowns in winter, it is advisable to drain all water from the system.

Ignition

Ensure the power is on to the appliance.

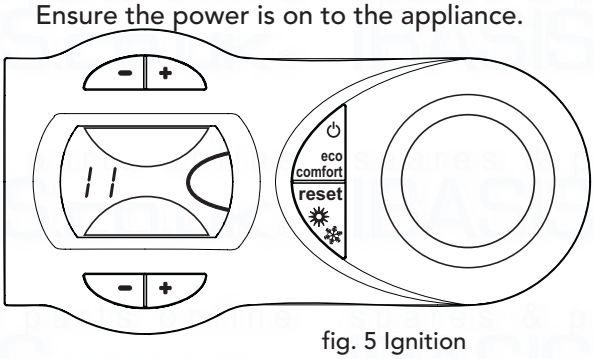

fig. 5 Ignition

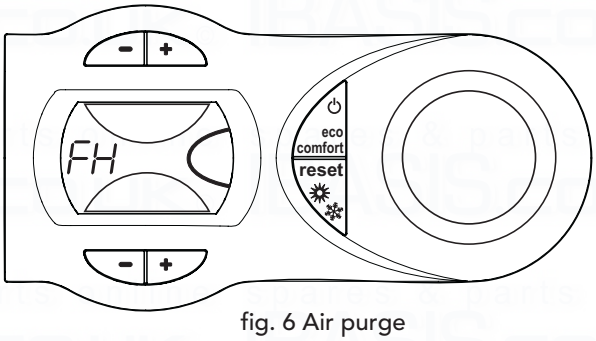

fig. 6 Air purge

- For the firsts 120 seconds, the display shows FH that identifies the Air purge function.
- During the first 5 seconds, the display shows the software version of the pcb.
- Open the gas cock on the boiler and purge the air from the pipework upstream of the gas valve.
- When the FH disappears, the boiler is ready to function automatically whenever the external controls

are calling for heat.

Turning off

Press the (part. 7 - fig. 1) for 5 seconds.

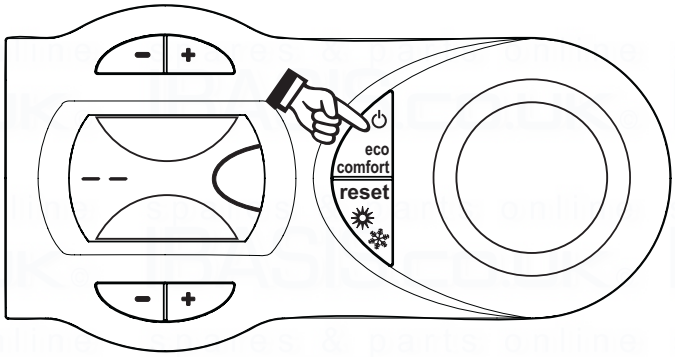

fig. 7 - Turning off

When the boiler is turned off with this key, the p.c.b is still powered, heating operation is disabled and the display is off however the frost protection will still be active.

To totally isolate close the gas cock ahead of the boiler and disconnect electrical power.

To avoid damage caused by freezing during long shutdowns in winter, it is advisable to drain all water from the system.

To turn boiler on again, press (part.7 - fig.1) for 5 seconds.

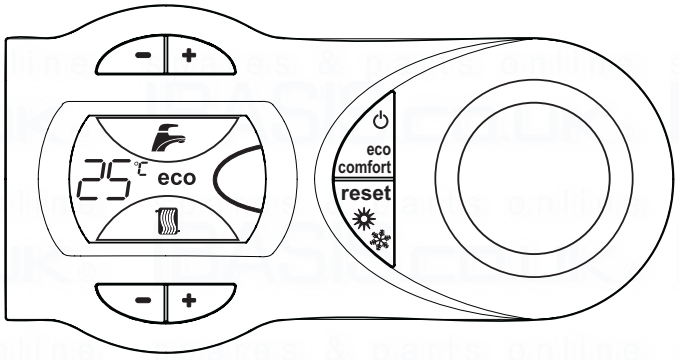

fig. 8

The boiler is ready to function automatically whenever the external controls are calling for heat.

1.4 Adjustments

Heating temperature setting

To set the system flow temperature, use the CH push buttons (Part. 3 and 4 – fig. 1). It can be varied from a minimum of 20°C to a maximum of 90°C.

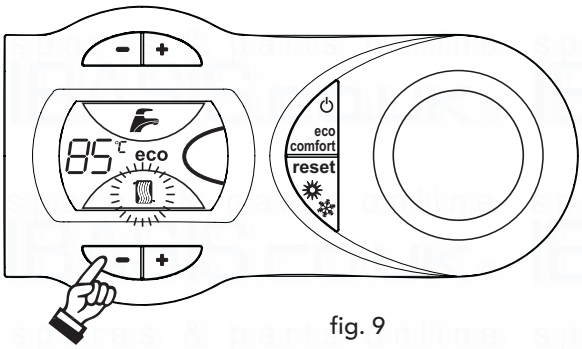

fig. 9

Domestic hot water temperature setting

To set the hot water temperature, use the DHW push buttons (Part. 1 and 2 – fig. 1). It can be varied from a minimum of 40°C to a maximum of 55°C.

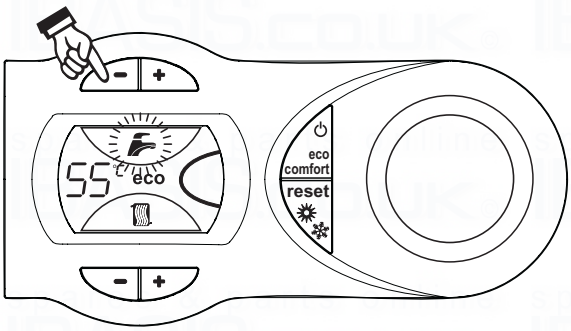

fig. 10

Room temperature adjustment (using a room thermostat)

Using the room thermostat, set the temperature desired. Controlled by the room thermostat, the boiler lights and heats the system water to the system delivery setpoint temperature. The burner shuts down when the desired temperature in the room is reached.

A room thermostat and programmer are a mandatory requirement (Building regulations Doc 'L' 2002).

Room temperature adjustment (using an optional Remote Control)

Using the remote control, set the temperature desired. The flow temperature will be controlled by the remote control. For settings and other informations, see the relative manual.

Economy/Comfort selection

The unit is equipped with a special internal device that ensures a high hot-water delivery speed and excellent user comfort. When comfort mode is active the water in the boiler is maintained at a pre-determined temperature, which means that hot water is available at the boiler outlet as soon as a tap is opened, ie with no waiting.

The user can turn the device off (ECO mode) by pressing (part.7 - fig.1). In ECO mode the display shows the relevant symbol (part. 12 - fig. 1). To turn on COMFORT mode, press (part.7 - fig.1) again, the ECO symbol will vanish from the display.

Outside temperature compensation

When the (optional) external sensor kit is fitted to the appliance, the system can work in Outside temperature compensation mode. In O.T.C. mode the temperature of the heating system is controlled according to the external climate conditions, this will guarantee a high degree of comfort and energy saving all year round.

By the CH push buttons (Part. 3 and 4 – fig. 1) is possible to set the maximum flow temperature for the installation.

O.T.C. setting

To enter the OTC mode, press (Part. 6 – fig. 1) for 5 seconds.

The display shows CU flashing (fig. 11); to set Curve, use the DHW push buttons (Part. 1 and 2 – fig. 1). It can be varied from 1 to 10, in accordance with the chart (fig. 13). O means no O.T.C. mode.

It is recommended a start point of 20 - 30°C and a flow temperature of 85°C is required for the UK (Curve 9 or 10).

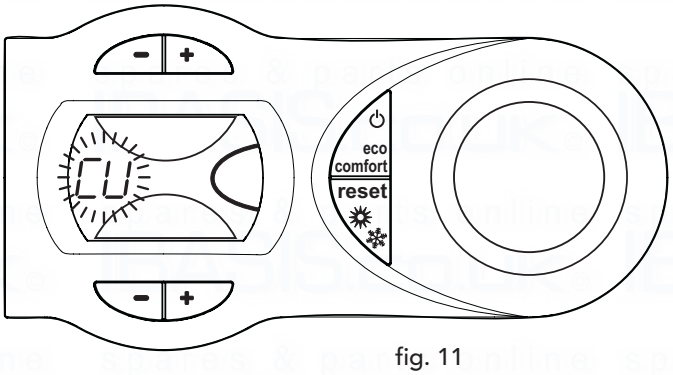

fig. 11

By pressing the CH push buttons (Part. 3 e 4 – fig. 1), the display shows OF flashing (fig. 12); to set Offset, use the DHW push buttons (Part. 1 and 2 – fig. 1). It can be varied from 20 to 40, in accordance with the chart (fig. 14).

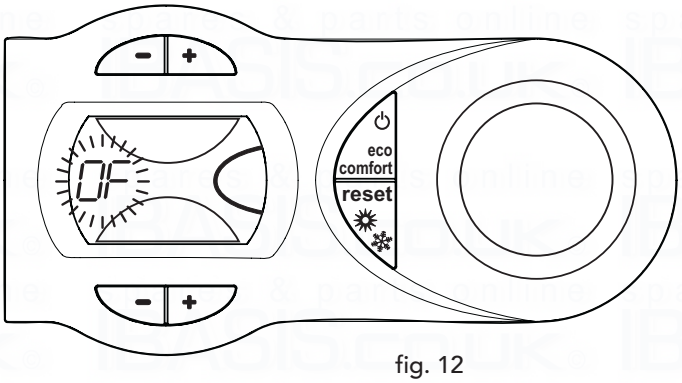

fig. 12

To exit the OTC mode, press reset (Part. 6 – fig. 1) for 5 seconds.

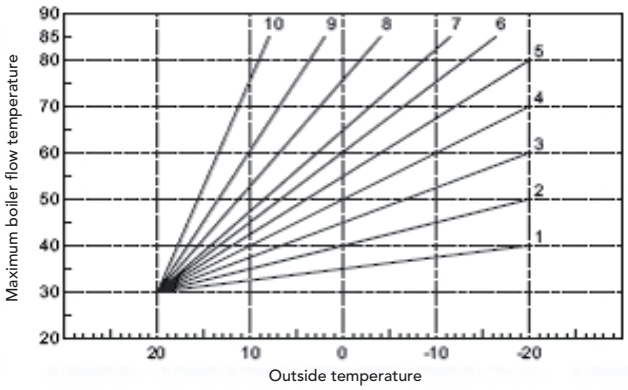

fig. 13

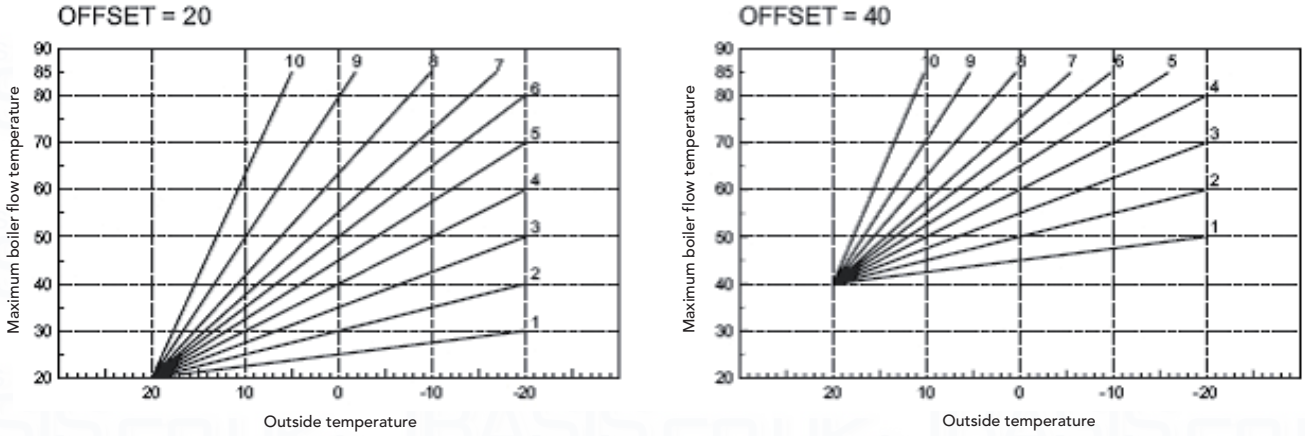

fig. 14

Cod. 3540I892 - 02/2009 (Rev. 00)

1.5 Maintenance

It is strongly recommended to carry out annual maintenance of the boiler and heating system. Please refer to the "maintenance" section in this manual.

The casing, the control panel and the aesthetic parts of the boiler can be cleaned using a soft and damp cloth, **do not use abrasives or solvents.**

1.6 Faults

In the unlikely event of an operating problem, or component failure, the display flashes and a fault identification code appears.

The boiler is equipped with an advanced self-diagnosis system that signals any faults on the display. Some faults ("A" indication) cause a boiler shutdown. In this case, operation must be reset manually by pressing the reset (Part. 6 – fig. 1) for 1 seconds.

Other faults ("F" indication) cause temporary shutdowns that are automatically reset as soon as the value causing the fault comes back within the boiler's normal working range.

Listed below are some anomalies that can be caused by simple, user-solvable problems.

If the problem remains after two attempts at resetting, contact the Ferroli Service Centre.

For other faults, refer to section 3.4 "Troubleshooting".

	Fault	Cure
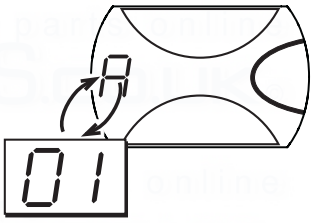	**No burner ignition**	Make sure that the gas cocks ahead of the boiler and on the meter are open. Press the RESET button (for 1 second). In case of repeated shutdowns, contact the Ferroli Service centre.
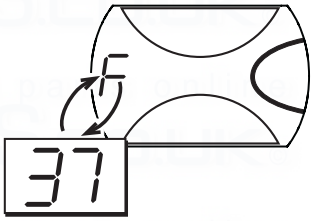	**Low system pressure**	Fill the 'system to 1-1.5 bar.

Before calling a Ferroli service engineer, check that the problem is not due to there being no gas or electricity, or low system pressure.

2. INSTALLATION

2.1 General Instructions

This device must only be used for the purpose for which it is specially designed. This unit is designed to heat water to a temperature below boiling point and must be connected to a heating system and/or a water supply system for domestic use, compatible with its performance, characteristics and its heating capacity. Any other use is considered improper.

BOILER INSTALLATION MUST ONLY BE PERFORMED BY QUALIFIED PERSONNEL, IN ACCORDANCE WITH ALL THE INSTRUCTIONS GIVEN IN THIS TECHNICAL MANUAL, THE PROVISIONS OF CURRENT LAW, THE RECOMENDATION OF BS STANDARDS, ANY LOCAL REGULATIONS AND THE RULES OF COMPETENT WORKMANSHIP.

Incorrect installation can cause damage or physical injury for which the manufacturer declines any responsibility.

This appliance must be installed strictly in accordance with these instructions and regulations:

The Gas Safety Regulations (Installations & Use).
The Local Building Regulations.
The Building Regulations (Part L).
The Buildings Standards (Scotland - Consolidated) Regulations.
British Standards Codes of Practice:

B.S. 5440 Part 1 Flues
B.S. 5440 Part 2 Air supply
B.S. 5449 FORCED CIRCULATION HOT WATER SYSTEMS
B.S. 6798 INSTALLATION OF GAS FIRED HOT WATER BOILERS
B.S. 6891 GAS INSTALLATIONS
B.S. 7671 IEE WIRING REGULATIONS
B.S. 4814 SPECIFICATION FOR EXPANSION VESSELS
B.S. 5482 INSTALLATION OF LPG
B.S. 7593 TREATMENT OF WATER IN DOMESTIC HOT WATER CENTRAL HEATING SYSTEMS
B.S. 5546 INSTALLATION OF HOT WATER SUPPLIES FOR DOMESTIC PURPOSES

Model Water Bye Laws
B.S. 5955-8 PLASTIC PIPEWORK INSTALLATION

For Northern Ireland the rules in force apply

2.2 Boiler location

The unit's combustion circuit is sealed off from the installation room and therefore requires no compartment ventilation.

The installation room must be sufficiently well ventilated to prevent any dangerous conditions from forming in the event of even slight gas leakage. This safety standard is required by the EEC Directive no. 90/396 for all gas units, including those with a so-called sealed chamber.

Therefore the place of installation must be free of dust, flammable materials or objects or corrosive gases. The room must be dry and not subject to freezing.

The boiler is designed to be installed on a solid wall. The wall fixing must ensure a stable and effective support for the appliance, using the bracket and fixings supplied.

If the unit is enclosed in a cupboard or mounted alongside, there must be space for normal maintenance work. Fig. 15 and tab. 1 gives the minimum clearances to leave around the unit.

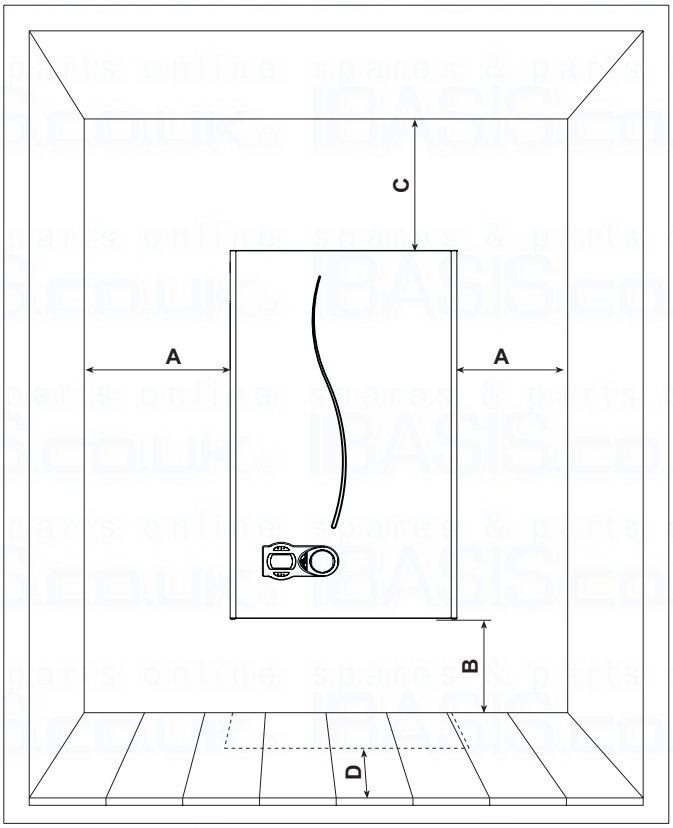

fig. 15

Table 1

	Minimum
A	2,5 cm
B	20 cm
C	30 cm
D	60 cm (via an openable panel)

Safe Handling of Substances

Care should be taken when handling the boiler insulation panels, which can cause irritation to the skin. No asbestos, mercury or CFCs are included in any part of the boiler.

Product Handling Advise

When handling or lifting always use safe techniques - keep your back straight, bend your knees, don't twist - move your feet, avoid bending forwards and sideways and keep the load as close to your body as possible.

Where possible transport the boiler using a sack truck or other suitable trolley.

Always grip the boiler firmly, and before lifting feel where the weight is concentrated to establish the centre of gravity, repositioning yourself as necessary.

2.3 Boiler water connections

The heating capacity of the unit should be previously established by calculating the building's heat requirement according to current regulations. For good operation and long life of the boiler, the plumbing system must be well proportioned and always complete with all those accessories that guarantee regular operation and running, room thermostat, trv's etc. The flow and return must be a minimum diameter of 22 mm for the first 3 metres from the appliance.

If the flow and return pipes follow a path where air pockets could form in certain places, it is essential to install vent valves at these points. Also, install type "A" drain cocks at the lowest points in the system to allow complete draining.

The temperature differential between the flow manifold and the return to the boiler should not exceed 20° C.

A minimum flow of 6 litres/min is required through the heat exchanger. An automatic by-pass is fitted to the boiler which will provide this flow rate in most circumstances.

⚠ Do not use the water system pipes to earth electrical appliances.

Before installation, carefully flush all the pipes of the heating system to remove residues or impurities that could affect the unit's operation (BS 7593 Building regs Doc L).

Make the connections to the appliance as shown in fig. 16

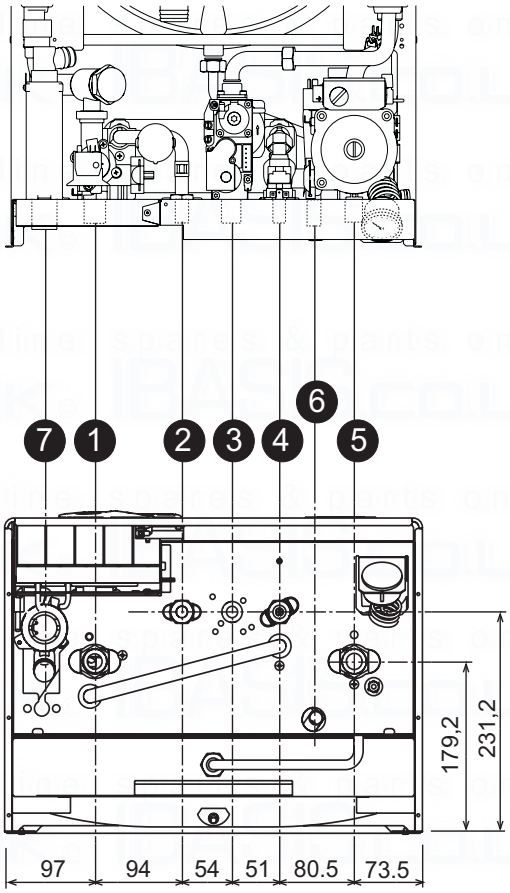

fig. 16

Key

1 System flow (22 mm with isolation valve fitted)
2 DHW outlet (15 mm)
3 Gas inlet (22 mm with isolation valve fitted)
4 Cold main inlet (15 mm with isolation valve fitted)
5 System return - 22 mm with isolation valve fitted (c/w filter)
6 Pressure Relief Valve
7 Condense outlet

It is essential to install the isolation valves supplied between the boiler and heating system, allowing the boiler to be isolated from the system if necessary.

⚠ The safety valve outlet must be connected to a 15mm diameter copper pipe, with a continual fall from the boiler to allow system water out onto the ground in the event of over-pressure in the heating circuit. If this is not done, and the drain valve trips and floods the room, the boiler manufacturer is not to be held responsible. The outlet should face back against the outer brickwork or building face to prevent harm or injury from hot water discharging in the event of an over-pressurised system.

Make the boiler connection in such a way that its internal pipes are free of stress. If a check valve is installed on the tap water circuit (where applicable), it is necessary to mount a safety valve between the boiler and this circuit (check valve minimum 3 metres from boiler) or a domestic expansion vessel.

The isolation valves and filling kit shown in Fig. 17 is supplied as standard.

1 - The kit consist of the following items shown in fig 17.

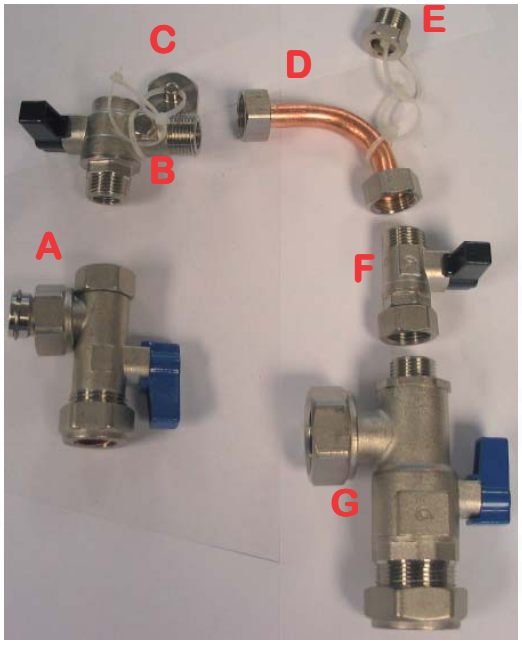

fig. 17

Key

A	Cold water inlet valve
B	Double check valve
C	Blanking cap
D	Removable connection
E	Blanking plug
F	Isolation valve
G	C/H return valve & filter

2 - Connect the items together as shown in fig. 18.

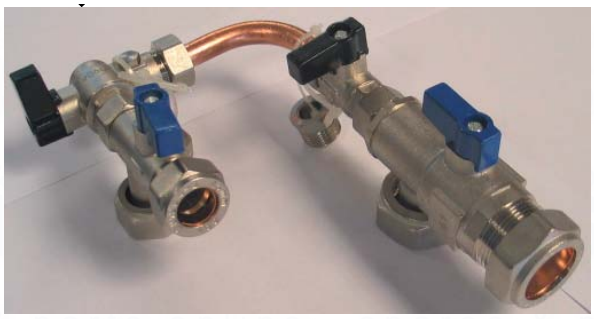

fig. 18

3 - .....and then connect the completed assembly to the boiler as shown in fig. 19.

fig. 19

Make Up Water

Provision must be made for replacing water lost from the sealed system. Reference should be made to BS6798, for methods of filling and making up sealed systems. There must be no direct connection between the boiler's central heating system and the mains water supply. The use of mains water to charge and pressurise the system directly, is conditional upon the Local Water Byelaws. Again any such connection must be disconnected after use.

A filling connection is supplied with the valve set in the boiler box.

Attention - is drawn to the Model Water Byelaws.

Water treatment

If treatment is used ferroli limited recommanded only the use of Fernox or Sentinel water treatment products, which must be used in accordance with the manufacturers instructions. for further information contact:

Fernox Manufacturing Co. LTD.	Sentinel Performance Solutions Ltd
Cookson Electronics, Forsyth Road	The Heath Business & Technical Park
Sheerwater, Woking, surrey, GU21 5RZ	Runcorn, Cheshire WA7 4QX
Tel: 0870 8700362	Tel: 0151 424 5351

Note - If the boiler is installed in an existing system any unsuitable additives must be removed by thorough cleansing. All systems should be cleansed according to B.S. 7593.

Note - In hard water areas treatment to prevent lime scale may be necessary.

Note - It is important that the correct concentration of the water treatment product is maintained in accordance with the manufacturers instructions.

2.4 Connection to the gas system

If necessary the local Gas supplier should be consulted, at the installation planning stage, in order to establish the availability of an adequate supply of gas.

An existing service pipe must **not** be used without prior consultation with the local Gas supplier.

A gas meter can only be connected by the Local Gas supplier, or by a Local Gas suppliers Contractor.

Installation pipes should be fitted in accordance with BS6891.

Appliance inlet **working pressure** must be 20mbar MINIMUM, for NG and 37 mbar minimum for LPG.

Do not use pipes of a smaller size than the combination boiler inlet gas connection (22 mm).

⚠ The complete installation must be tested for gas soundness and purged as described in BS689. All pipework must be adquately supported. An isolating gas valve is provided and should be fitted on the boiler gas inlet. Please wait 10 minutes when lighting from cold before checking. Gas pressures should be checked after the boiler has operated for 10 minutes to reach thermal equilibrium. This appliance has no facility to check the burner pressure, however if the inlet pressure and the gas rate are correct the boiler should be set correctly, the gas valve is set and sealed at the factory and should not be adjusted without authorisation from Ferroli Personnel. A combustion test can be carried out to ensure correct air/gas mix (see page 28 combustion analyser testing).

⚠ The isolation kit shown in Fig. 17 is supplied as standard.

2.5 Electrical Connections

The unit must be installed in conformity with current national and local regulations.

Connection to the electrical supply

The boiler must be connected to a single-phase, 230 Volt-50 Hz electric supply.

⚠ The unit's electrical safety is only guaranteed when correctly connected to an efficient earthing system installed according to current safety standards. Have the efficiency and suitability of the earthing system checked by professionally qualified personnel. The manufacturer is not responsible for any damage caused by failure to earth the system. Also make sure that the electrical system is adequate for the maximum power absorbed by the unit, as specified on the boiler dataplate, in particular ensuring that the cross sectional area of the system's cables is suitable for the power absorbed by the unit.

The boiler is prewired and provided with a cable and fitted with a 3 amp fused plug for connection to the electricity supply. It is important to respect the polarities (LIVE: brown wire / NEUTRAL: blue wire / EARTH: yellow-green wire) in making connections to the electrical supply.

The user must never change the unit's power cable. If the cable gets damaged, switch off the unit and have it changed only by professionally qualified personnel. If changing the electric power cable, use only **"HAR H05 VV-F"** 3x0.75 mm^2 cable with a maximum outside diameter of 8 mm.

Access to the electrical terminal block

Follow the instructions given in fig. 20 to access the electrical connection terminal board. The layout of the terminals for the various connections is given in the wiring diagram in the Technical Data chapter.

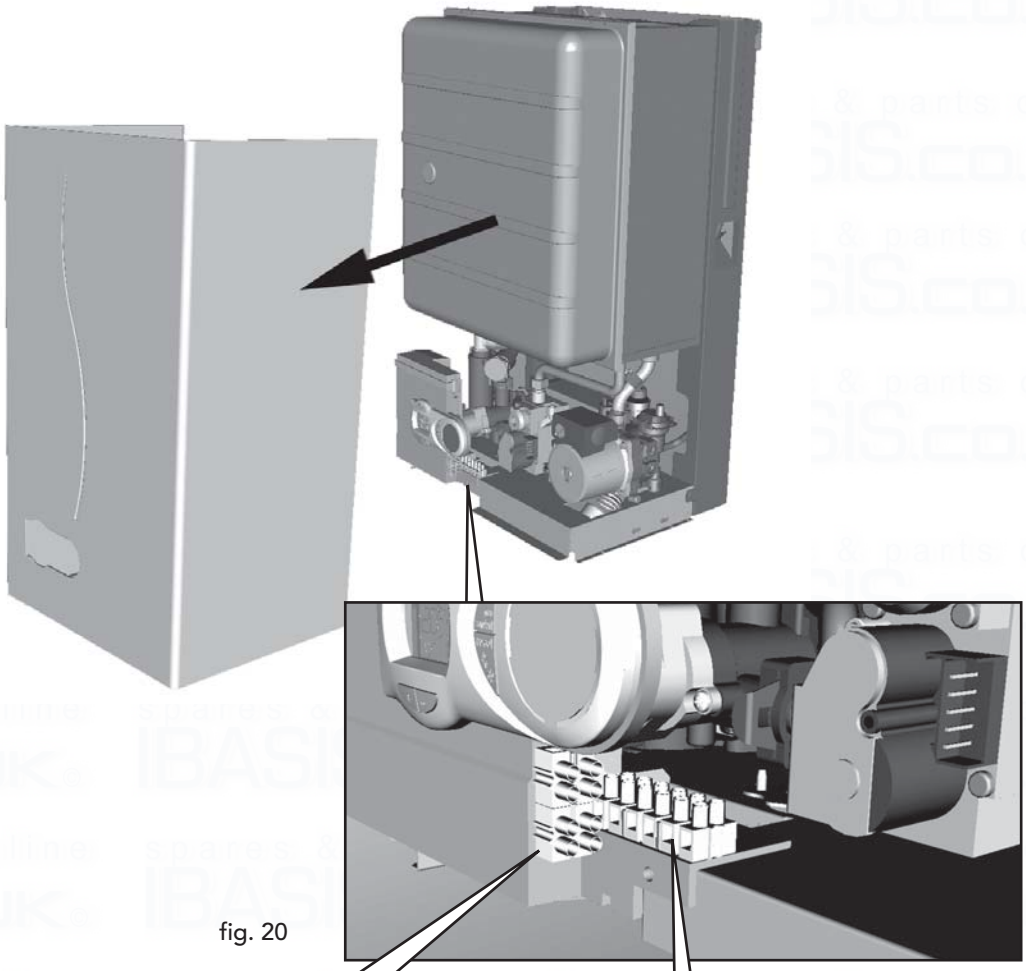

fig. 20

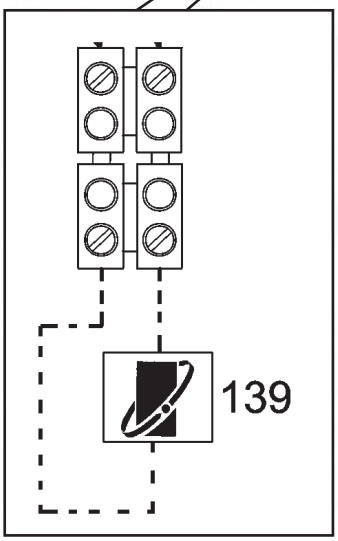

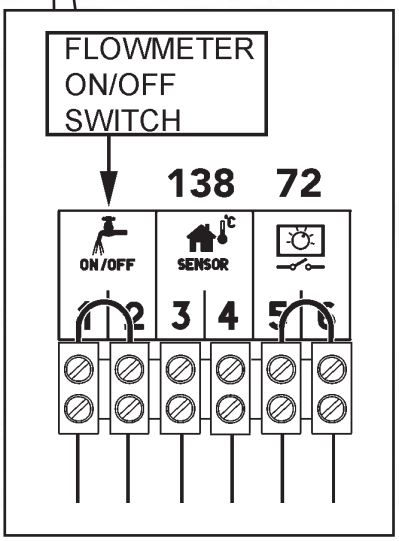

fig. 21

Key

72 Room thermostat (Volt Free)
138 Outside temperature sensor
139 Room unit (OpenTherm)

Room thermostat

CAUTION: THE ROOM THERMOSTAT MUST HAVE VOLTAGE FREE CONTACTS. CONNECTING 230 V. TO THE TERMINALS OF THE TIME CLOCK AND ROOM THERMOSTAT WILL IRREPARABLY DAMAGE THE P.C.B.

2.6 Flue system

The unit is "type C" with a **sealed chamber** and forced draught, the air inlet and flue outlet must be connected to one of the following flue systems. With the aid of the tables and methods of calculation indicated, before commencing installation, it is first necessary to check that the flue system does not exceed the maximum permissible length. The current standards and local regulations must be observed.

It should be noted that only Ferroli flue system and accessories should be used on this appliance, as per BS 5440 2000 and C.E. test certification.

Connection with coaxial pipes

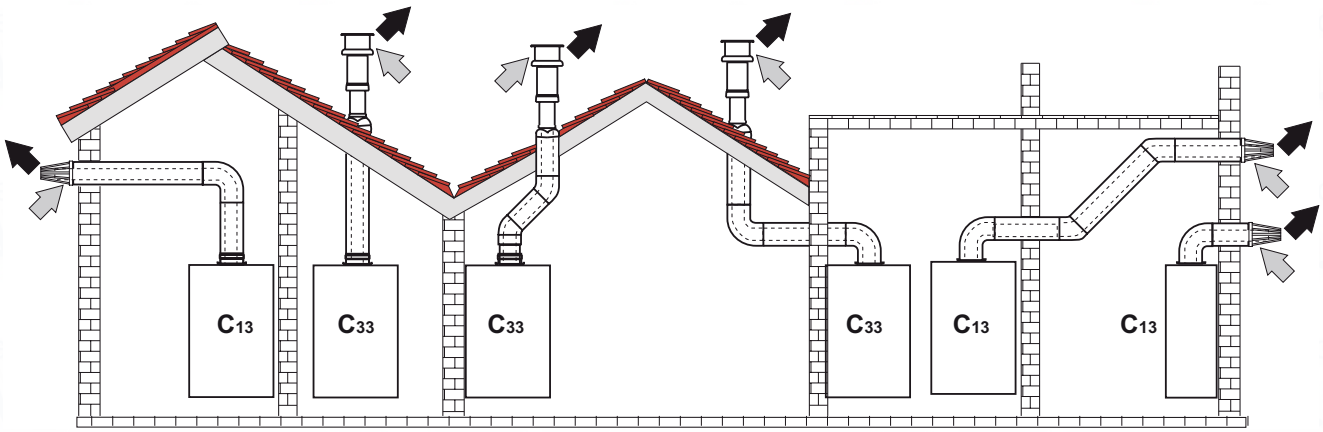

fig. 22 - Examples of connection with coaxial pipes (= Air / = Fumes)

For coaxial connection, fit the unit with one of the following starting accessories. For the wall hole dimensions, refer to sec. 4.1. Any horizontal sections of the fume exhaust must be kept sloping slightly towards the boiler, to prevent possible condensate from flowing back towards the outside and causing dripping.

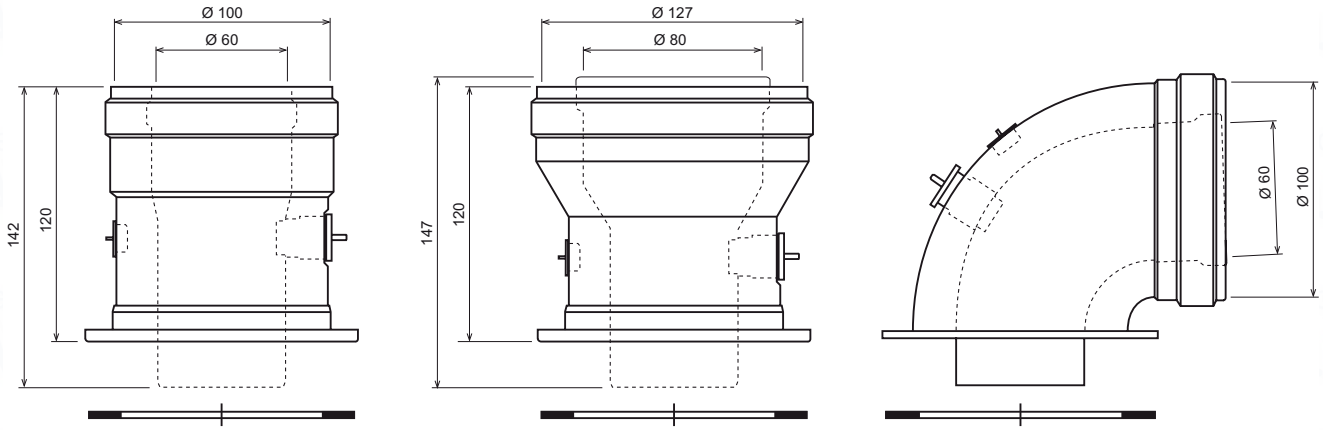

041002X0 041006X0 041001X0

Starting accessory for coaxial ducts

Before proceeding with installation, check with table 2 that the maximum permissible length is not exceeded, bearing in mind that every coaxial bend gives rise to the reduction indicated in the table. For example, a Ø 60/100 duct comprising a 90° bend + 1 horizontal metre has a total equivalent length of 2 metres.

Table. 2 - Max. length coaxial ducts

	Coaxial 60/100	Coaxial 80/125
Max. permissible length	**5 m**	**15 m**
Reduction factor 90° bend	1 m	0.5 m
Reduction factor 45° bend	0.5 m	0.25 m

Connection with separate pipes

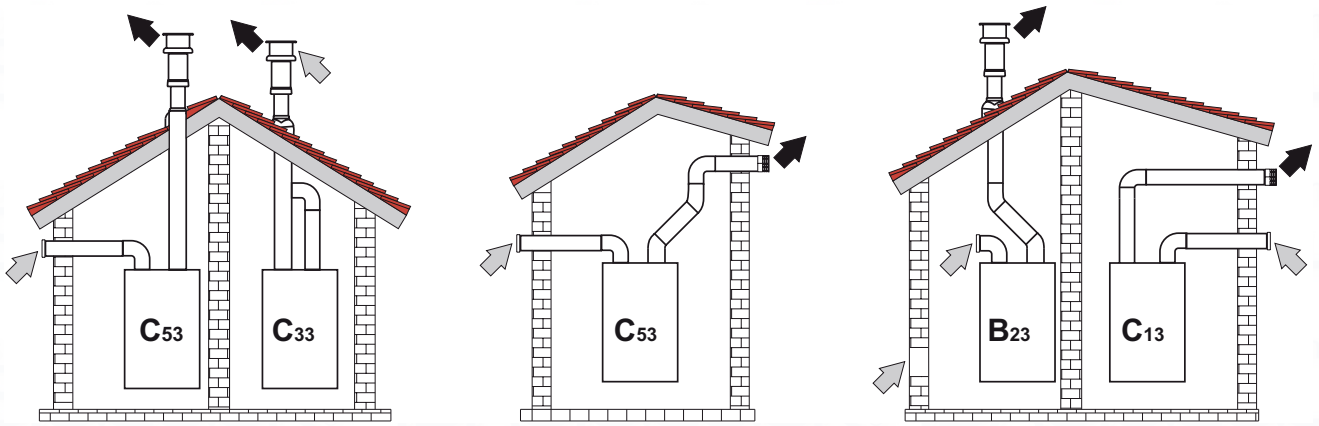

fig. 24 - Examples of connection with separate pipes (⇨ = Air ➡ = Fumes)

For connection of the separate ducts, fit the unit with the following starting accessory:

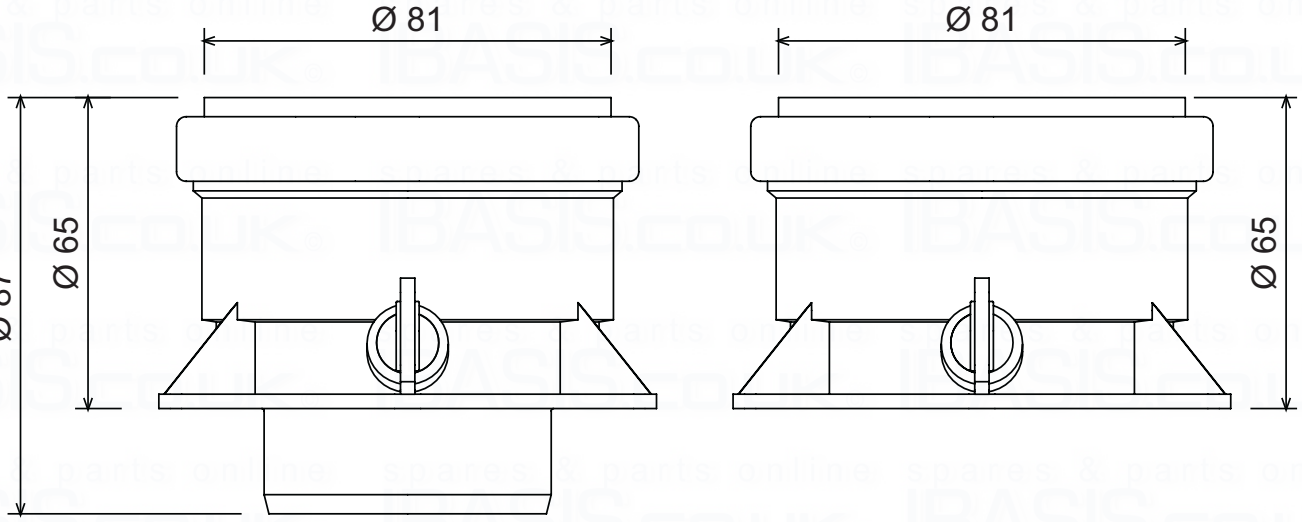

041039X0

Starting accessory for separate ducts

Before proceeding with installation make sure the maximum permissible length has not been exceeded, by means of a simple calculation:

1. Establish the layout of the system of split flues, including accessories and outlet terminals.
2. Consult the table 4 and identify the losses in m_{eq} (equivalent metres) of every element, according to the installation position.
3. Check that the sum total of losses is less than or equal to the maximum permissible length in table 3.

Table. 3 - Max. length separate ducts

	Separate ducts
Max. permissible length	55 m_{eq}

Table. 4 - Accessories

				Losses in m_{eq}		
				Air inlet	Fume exhaust	
					Vertical	Horizontal
Ø 80	**PIPE**	1 m M/F	1KWMA83W	1.0	1.6	2.0
	BEND	45° M/F	1KWMA65W	1.2	1.8	
		90° M/F	1KWMA01W	1.5	2.0	
	PIPE SECTION	with test point	1KWMA70W	0.3	0.3	
	TERMINAL	air, wall	1KWMA85A	2.0	-	
		fumes, wall with antiwind	1KWMA86A	-	5.0	
	FLUE	Split air/fumes 80/80	1KWMA84U	-	12.0	

Terminal Position

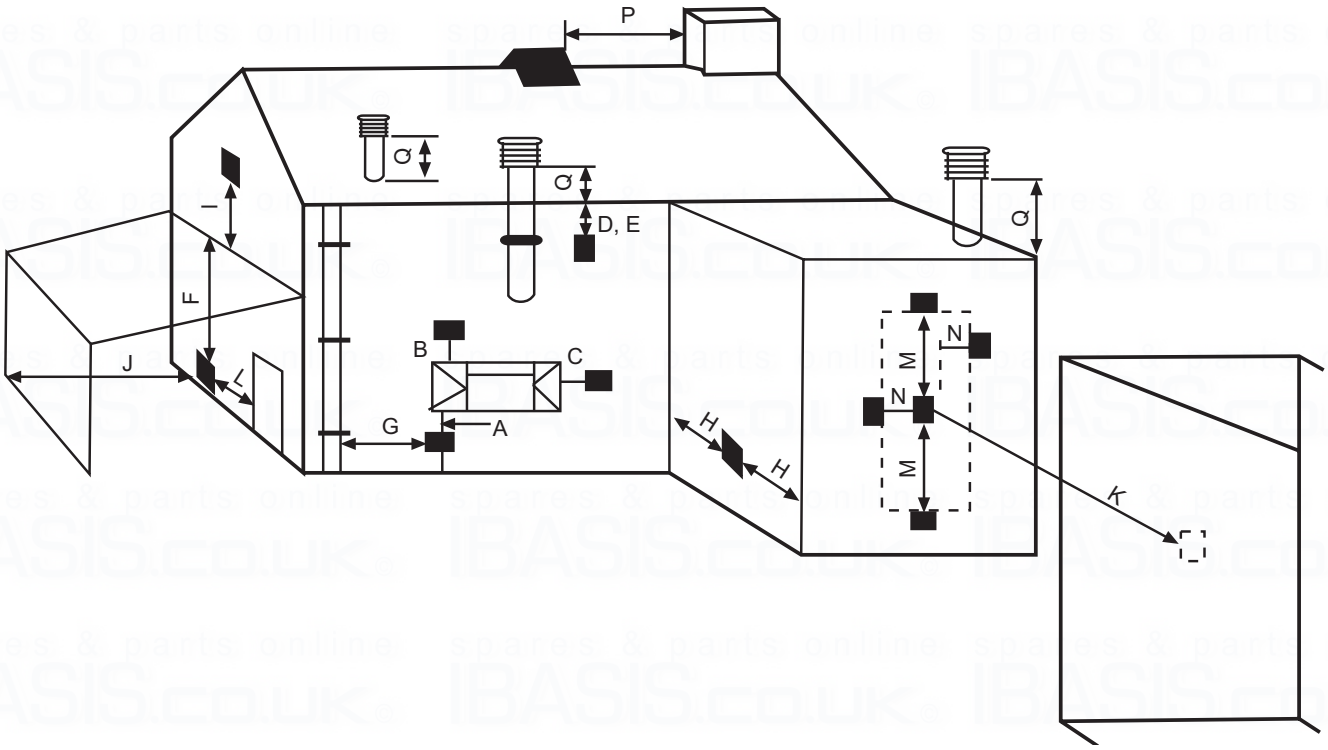

fig. 25

Minimum Dimensions of Flue Terminal Positions

A	Directly below an opening, air brick, opening windows, etc.	300mm
B	Above an opening, air brick, opening windows, etc.	300mm
C	Horizontally to an opening, air brick, opening windows, etc.	300mm
D	Below gutters, soil pipes or drain pipes	75mm
E	Below eaves	200mm
F	Below balconies or car port roof	200mm
G	From a vertical drain pipe or soil pipe	150mm
H	From an internal or external corner	100mm
I	Above ground roof or balcony level	300mm
J	From a surface facing the terminal	600mm
K	From a terminal facing the terminal	1200mm
L	From an opening in the car port (e.g. door, window) into the dwelling	1200mm
M	Vertically from a terminal on the same wall	1500mm
N	Horizontally from a terminal on the same wall	300mm
O	From the wall on which the terminal is mounted	N/A
P	From a vertical structure on the roof	150mm
Q	Above intersection with roof	300mm

NOTE

N/A = Not applicable

In addition, the terminal should not be nearer than 150mm (fanned draught) to an opening in the building fabric formed for the purpose of accommodating a built-in element such as a window frame.

Condensing Terminal Positions: If the flue is to be terminated at low level, then the potential effect of the plume must be considered.
Plume management kits are available from Ferroli.

The plume should not be directed:
- across a frequently used access route
- towards a window or door
- across a neighbouring property

Connection to collective flues or single flues with natural draught

If you are then going to connect the **OPTIMAX HE PLUS 38 C** boiler to a collective flue or a single flue with natural draught, the flue must be expressly designed by professionally qualified technical personnel in conformity with the standards and rules in force.

In particular, flues must have the following characteristics:

- Be sized according to the method of calculation stated in the standard
- Be airtight to the products of combustion, resistant to the fumes and heat and waterproof for the condensate
- Have a circular or square cross-section (some hydraulically equivalent sections are permissible), with a vertical progression and with no constrictions
- Have the flue conveying the hot fumes adequately distanced or isolated from combustible materials
- Be connected to just one unit per floor, for at most 6 units in all (8 if there is a compensation duct or opening)
- Have no mechanical suction devices in the main ducts
- Be at a lower pressure, all along their length, under conditions of stationary operation
- Have at their base a collection chamber for solid materials or condensation of at least 0.5 m, equipped with a metal door with an airtight closure.

2.7 Condensate outlet connection

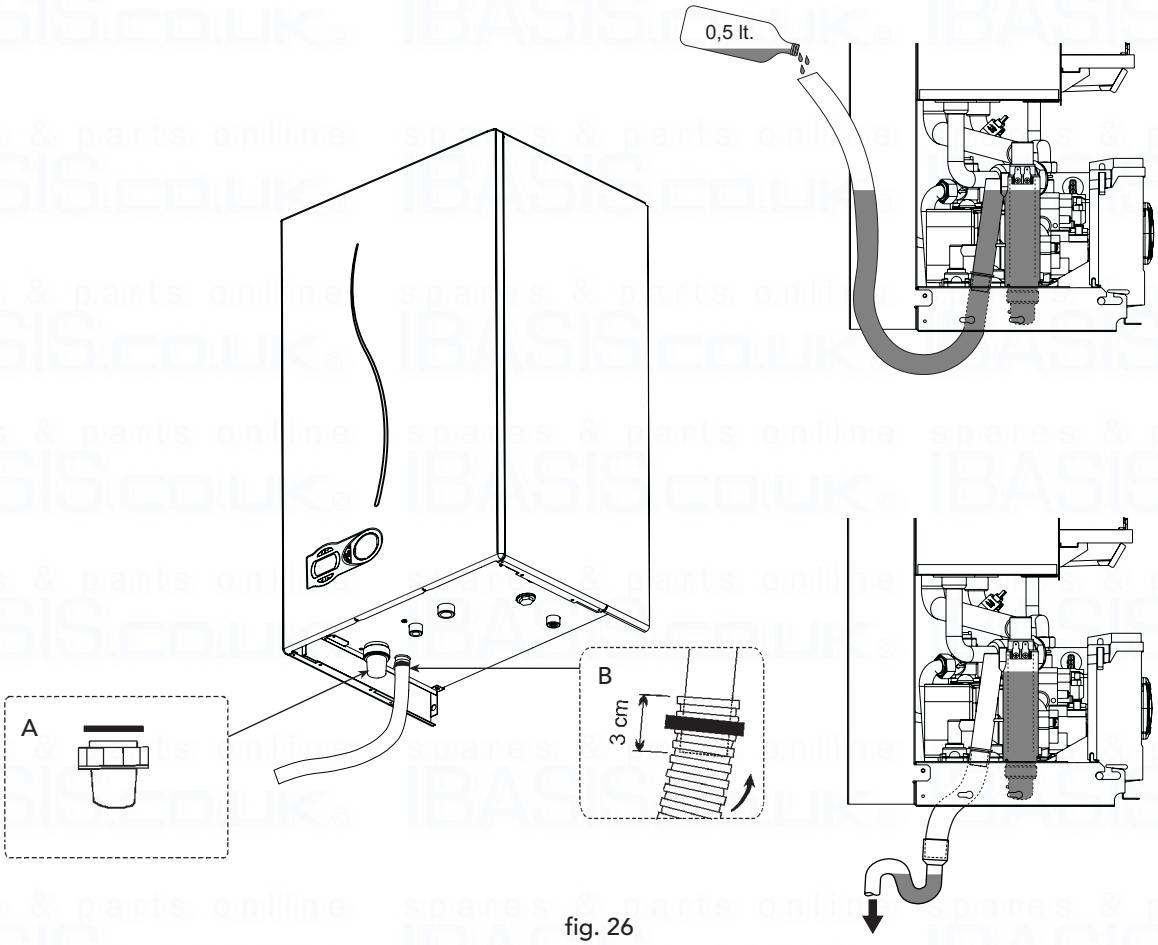

fig. 26

The boiler is equipped with an internal air-trap to drain off the condensate. Fit the inspection coupling **A** and the hose **B**, pushing it on for approximately 3 cm and securing it with a clamp.

Fill the air-trap with approximately 0.5 ltrs of water and connect the hose to the waste system, or soakaway.

Condensate discharge

Where possible the condensate should discharge into an internal soil pipe or waste system. The minimum pipe diameter required is 22 mm, a trap has already been fitted to the appliance with a flexible tail to facilitate the connection to the condensate discharge pipe.

The pipe should be a solvent weld plastic, not copper, as the condensate has a ph value of 4 (slightly acidic).

Where it is not possible to terminate internally, the condensate discharge pipe may be run outside (see below drawing).

Any external run is subject to freezing, in severe weather conditions. To avoid this the pipework should be installed to dispose of the condensate quickly, with as much as possible run internally, before passing through the wall.

Pipework external to the building should be increased in diameter to 32 or 40 mm solvent weld. It should be run to a external drain or soakaway, with a maximum length of 3 metres.

When a soakaway (condensate absorption point) is used, it should be constructed as shown below, or use a specifically designed unit, for example Mc Alpine SOAK1GR available from most plumbing and heating stockists.

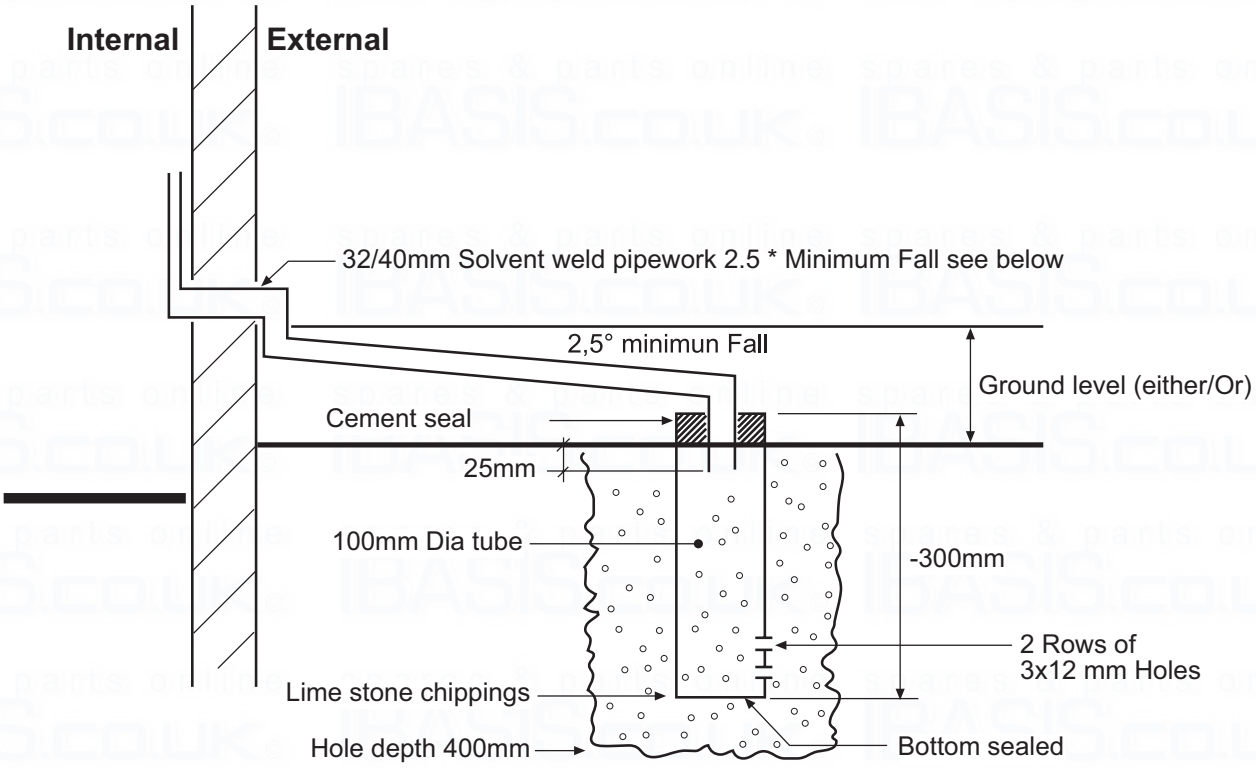

fig. 27

3. SERVICE AND MAINTENANCE

3.1 Adjustments

All adjustment and conversion operations must be carried out by Qualified Personnel such as ferroli Technical Service.

FERROLI declines any responsibility for damage or physical injury caused by unqualified and unauthorized persons tampering with the device.

Gas supply conversion

The unit can operate on natural gas or LPG and is factory-set for use with one of these two gases, as clearly shown onthe packing and on the dataplate. If a gas different from that for which the unit is arranged has to be used, a conversionkit will be required, proceeding as follows:

1 Remove the casing.
2 Open the airtight chamber.
3 Release the fixing clip **C** and remove gas pipe **A** from the fan - venturi assembly.
4 Replace nozzle **B**, inserted in the gas pipe, with that contained in the conversion kit.
5 Reassemble gas pipe A with the clip and check the seal of the connection.
6 Apply the label, contained in the conversion kit, near the dataplate.
7 Refit the sealed chamber and casing.
8 Modify the parameter for the type of gas:
- put the boiler in standby mode
- press the DHW buttons details 1 and 2 - fig.1 for 10 seconds: the display shows "P01" flashing.
- press the DHW buttons fig.1 details 1 and 2 - **to set parameter** 00 (for use with natural gas) or 01 (for use withLPG).
- press the DHW buttons details 1 and 2 - fig.1 for 10 seconds.
- the boiler will return to standby mode

9 Using a combustion analyser connected to the boiler fume outlet, check that the CO 2 content in the fumes, withthe boiler operating at max. and min. power, matches that given in the technical data table for the correspondingtype of gas.

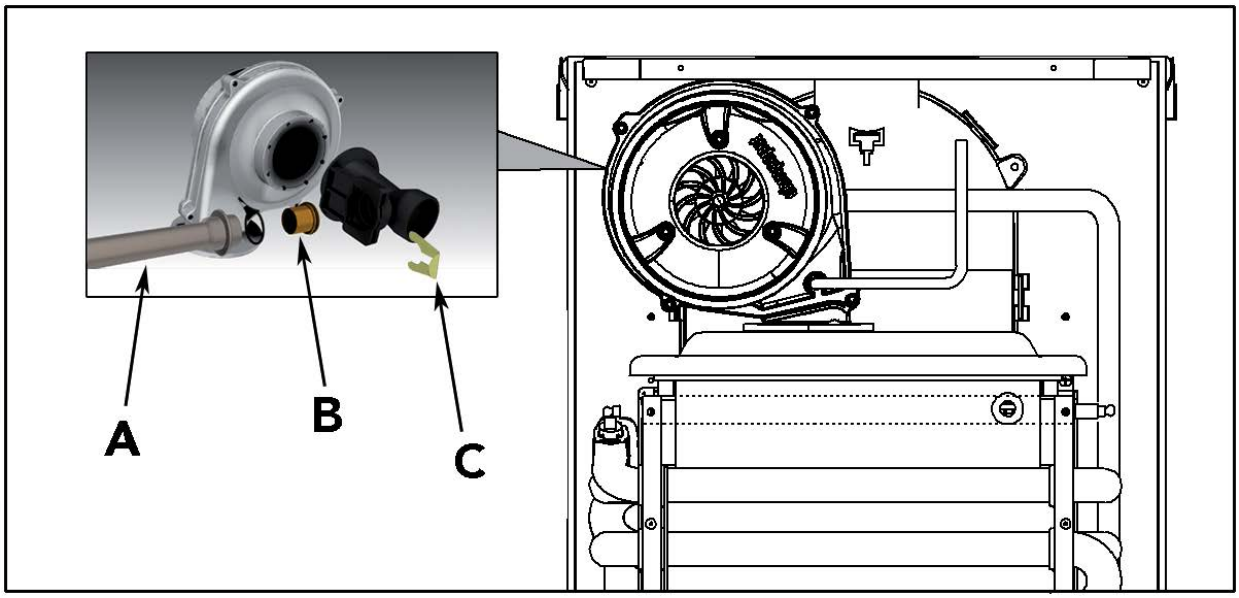

fig. 28

3.2 System start-up

Commissioning must be performed by Qualified Personnel.
Checks to be made at first ignition, and after all maintenance operations that involved disconnecting from the systems or an intervention of a safety device.

Before lighting the boiler:

- Open any isolation valves between the boiler and the system.
- Check the tightness of the gas system, proceeding with caution and use gas leak detection fluid to detect any leaks in connections.
- Check the pre-filling of the expansion tank (ref. sec.4.4).
- Fill the water system and make sure that all air contained in the boiler and the system has been vented by opening the air vent valve on the boiler and any vent valves on the system.
- Make sure there are no water leaks in the system, hot water circuits, connections or boiler.
- Make sure the electrical system is properly connected.
- Make sure that the unit is connected to a good earthing system.
- Make sure there are no flammable liquids or materials in the immediate vicinity of the boiler.
- Vent and spin the pump.
- Ensure the flue system is correctly fitted, including terminal locations.

Ignition

- Open the gas valve upstream of the boiler.
- Purge the air from the installation pipework to the appliance.
- Switch on the boiler electrical supply.
- Press the eco comfort key on the boiler for 5 seconds (part. 7 - fig. 1).
- The boiler is now ready to function automatically whenever there is a demand on the boiler.

In case of an electrical power failure while the boiler is working, the burner will go out. When power returns, the boiler will run the self-test cycle again, after which the burner will automatically re-ignite (if there is still a demand).

Checks during operation

- Check the tightness of the gas circuit and water systems.
- Check the efficiency of the flue and air-flue ducts while the boiler is working.
- Check that the water is circulating properly between the boiler and the system.
- Make sure that the gas valve modulates correctly.
- Check the proper ignition of the boiler by performing various tests, turning it on and off with the room thermostat or remote control.
- Make sure that the gas rate indicated on the meter corresponds to that given in the technical data table in section 4.4 page 35

Turning off

Press the eco comfort key for 5 seconds (part. 7 - fig. 1).

3.3 Maintenance

The following operations are strictly reserved for Qualified Personnel, such as corgi registered engineers or Ferroli engineers.

Seasonal inspection of the boiler and flue

It is advisable to carry out the following checks at least once a year:

- The control and safety devices (gas valve, flow meter, thermostats, etc.) must function correctly.
- The flue terminal and ducts must be free of obstructions and leaks.
- The gas and water systems must be sound.
- The burner and exchanger must be clean.
- The electrodes must be free of deposits and correctly positioned.
- The system pressure when cold must be approx 1 bar; otherwise, bring it to that value.
- The expansion vessel must be filled to 1 bar cold with zero system pressure.
- The gas flow and pressure must correspond to that given in table 10 section 4.4 page 34.
- The circulating pump must be vented and free of debris.
- The return filter cleaned.
- The condensate trap inspection bowl should be cleaned and free of debris.

Opening the casing

To open the boiler casing, you need to follow the sequence given below and the instructions of fig. 29.

1 Using a screwdriver, fully unscrew and remove the 2 screws **"A "**
2 Open by lowering the panel **"B "**
3 Lift and take off the casing **"C "**

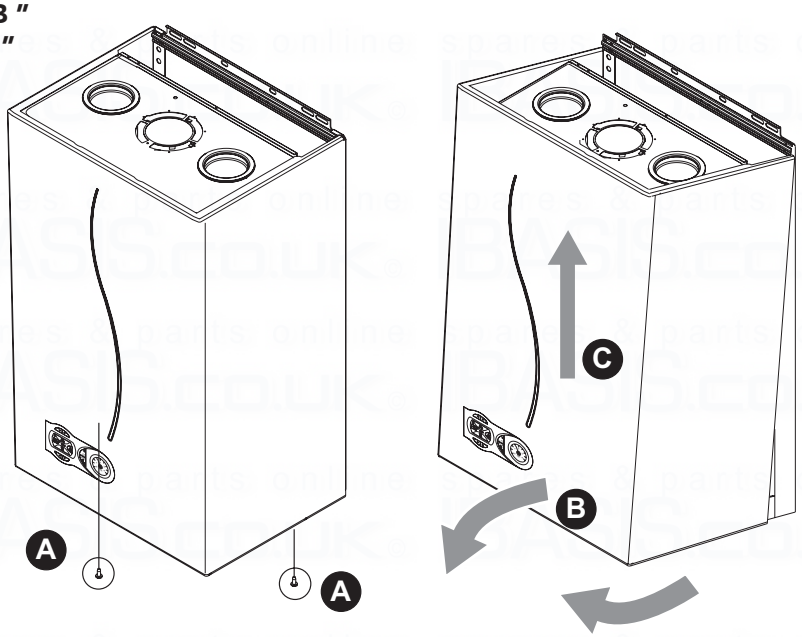

fig. 29

Cleaning the boiler and burner

The body and burner must not be cleaned with chemical products or wire brushes. Special care must be taken over all the sealing systems pertaining to the sealed chamber (gaskets, cable clamps, etc.). In addition, it is necessary to pay attention after performing all these operations to check and carry out all the phases of ignition and thermostat operation, the gas valve and circulation pump.

⚠ After these checks, make sure there are no gas leaks.

Combustion analysis

It is possible to analyse the combustion through the air and flue sampling points shown in fig. 16.

To make the measurement, it is necessary to:

1) Open the flue sampling point
2) Insert the probe;
3) Press CH button (part. 3, 4 - fig. 1) for 5 seconds to turn on TEST mode;
4) Wait 10 minutes for the boiler to stabilize
5) Take the measurement.

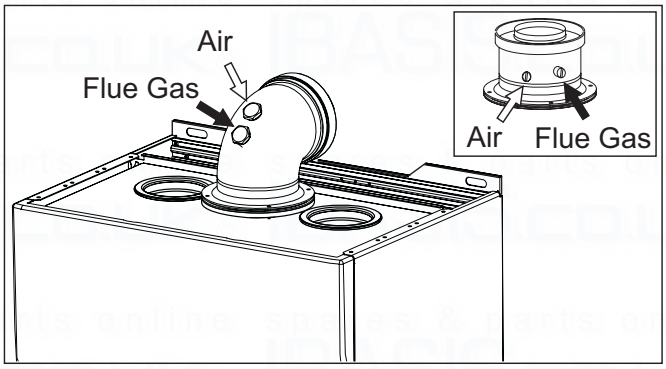

fig. 30

NAT GAS; CO_2 reading should be 8.7 to 9.0%
L.P.G; CO_2 reading should be 9.5 to 10%

Readings taken with an unstabilized boiler will cause measurement errors.

3.4 Troubleshooting

Fault Diagnosis

In the event of operating problems or trouble, the display will flash and a fault identification code appears.

There are faults that in order to restore operation the RESET button must be pressed (ref.6 - fig. 1); or if the boiler fails to start, it will be necessary to repair the fault (code nos. F1 to F24). Other faults cause temporary shutdowns that are automatically reset as soon as the value comes back within the boiler's normal working range (codes from 25 to 47).

When the boiler starts functioning normally again, the display stops flashing and the fault code disappears.

	Fault	Possible cause	Cure
A01	No burner ignition	No gas	Check the regular gas flow to the boiler and the air has been purged from the pipes.
		Detection or ignition electrode fault	Check that the electrodes are correctly positioned and free of any deposits
		Defective gas valve	Check and change the gas valve
		Incorrect inlet gas pressure	Check inlet gas pressure
		Siphon obstructed	Check and if necessary change the siphon
A02	Flame detected with the burner off	Ionisation electrode defective	Check the ionizing electrode wiring
		Main board defective	Check the PCB
A03	High limit protection	Flow temperature sensor not active or correctly located	Check the correct positioning and operation of the flow sensor
		No system circulation	Check the pump and radiator valves present in the system Check operation of the internal by-pass
A04	Flue gas fault	Fault F07 happened 3 times in the last 24 hours	Check the flue
A05	Fan problem	Tachometer signal interrupted for 1 hour or longer	Check the wiring and the fan
A06	No flame after the ignition phase (6 times in 4 min.)	Detection electrode fault	Check that the electrode is correct positioned and if necessary change it
		Flame unstable	Check the burner
		Incorrect valve gas Offset	Check Offset at the minimum power
		Flue gas circuit obstructed	Check if flue gas circuit is free
		Siphon obstructed	Check and if necessary change the siphon
A41	Flow sensor disconnected	Sensor disconnected	Check the correct position and operation of the flow sensor
F07	Flue gas fault	The exhaust gases temperature becomes higher than 95°C for 2 minutes.	Check the flue
F10	Flow sensor fault	Sensor damaged or short circuited	Check the wiring or change the sensor
		Sensor damaged or wiring broken	Check the wiring or change the sensor
F11	Return sensor fault	Sensor da maged or wiring shorted	Check the wiring or change the sensor
		Sensor damaged or wiring broken	Check the wiring or change the sensor

	Fault	Possible cause	Cure
F12	DHW sensor fault	Sensor damaged	Check the wiring or replace the sensor
		Wiring shorted	
		Wiring disconnected	
F13	Flue sensor fault	Sensor damaged or wiring shorted	Check the wiring or change the sensor
		Sensor damaged or wiring broken	Check the wiring or change the sensor
F14	Flow sensor fault	Sensor damaged or short circuited	Check the wiring or change the sensor
		Sensor damaged or wiring broken	Check the wiring or change the sensor
F15	Fan problem	Tachometer signal interrupted, fan connection	Check the wiring and fan
		Fan damaged, debris in fan	Check the fan, clean debris
F34	Supply voltage under 170V.	Electric supply problem	Check the electrical system
F35	Irregular mains frequency	Electric supply problem	Check the electrical system
F37	Incorrect system water pressure	Pressure too low	Fill the system
		Sensor damaged	Check the sensor
F39	External probe fault	Sensor damaged or short-circuited	Check the wiring or change the sensor
F42	Flow sensor fault	Sensor damaged	Change the sensor

4. TECHNICAL CHARACTERISTICS AND DATA

4.1 Dimensions and connections

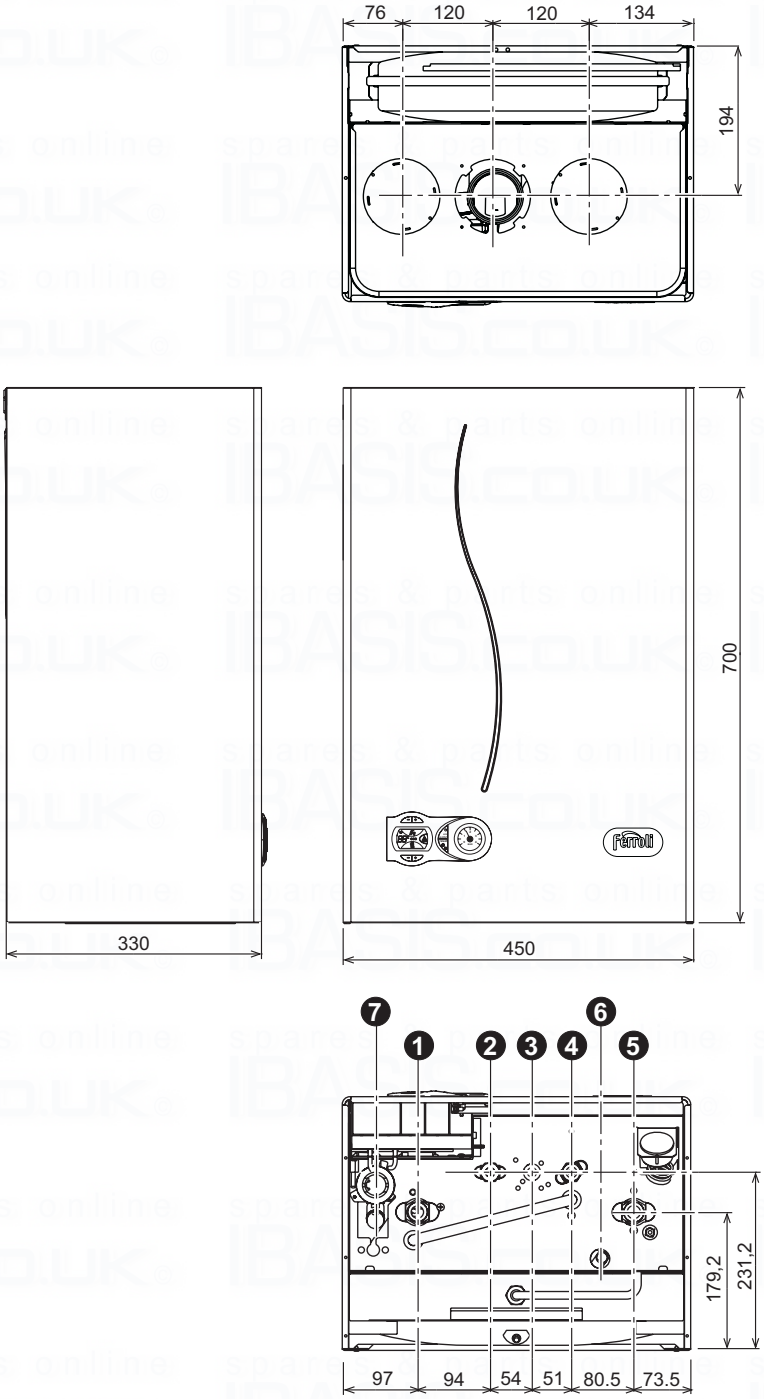

fig. 31

Key

1 System flow (22 mm with isolation valve fitted)
2 DHW outlet (15 mm)
3 Gas inlet (22 mm with isolation valve fitted)
4 Cold main inlet (15 mm with isolation valve fitted)
5 System return - 22 mm with isolation valve fitted (c/w filter)
6 Pressure Relief Valve
7 Condense outlet

4.2 General view and main components

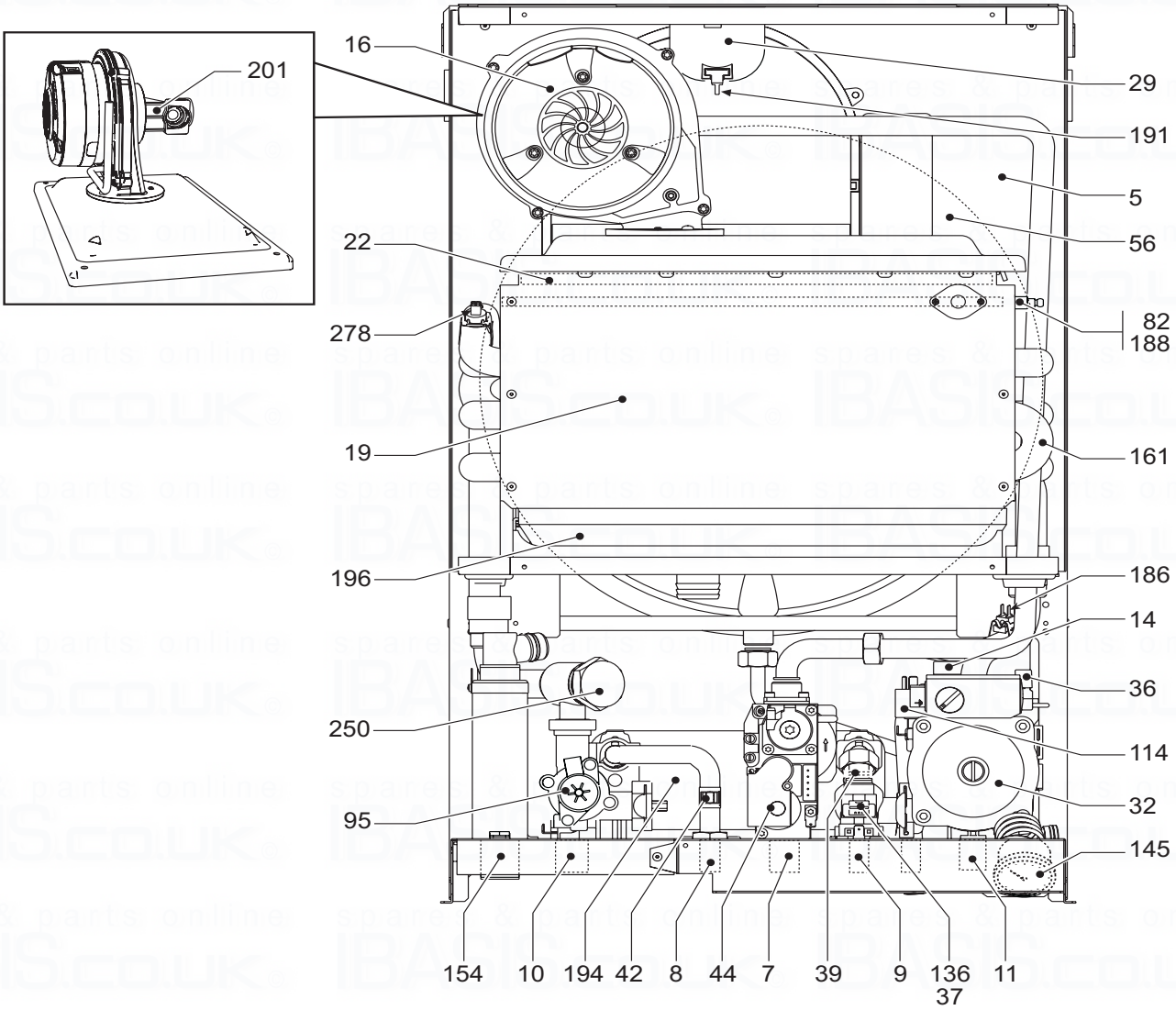

fig. 32

Key

5	Room sealed compartment
7	Gas inlet
8	DHW outlet
9	Cold main inlet
10	CH flow
11	CH return
14	Heating safety valve
16	Premix fan assembly
19	Combustion-compartment
22	Main burner
29	Internal flue collar
32	Heating pump
36	Automatic air vent
37	Cold water inlet filter
39	Cold water flow limiter
42	D.h.w. temperature sensor
44	Gas valve
56	Expansion vessel
82	Ionisation electrode
95	Motorised Diverting valve
114	Water pressure switch
136	Flow meter
145	C.h. pressure gauge
154	Condensate outlet pipe
161	Heat exchanger
186	Return temperature sensor
188	Spark Electrode
191	Flue temperature sensor
194	Domestic plate Heat exchanger
196	Condensate collector
201	Fan Venturi
250	System delivery filter
278	Double sensor (Safety + Heating flow)

4.3 Hydraulic diagram

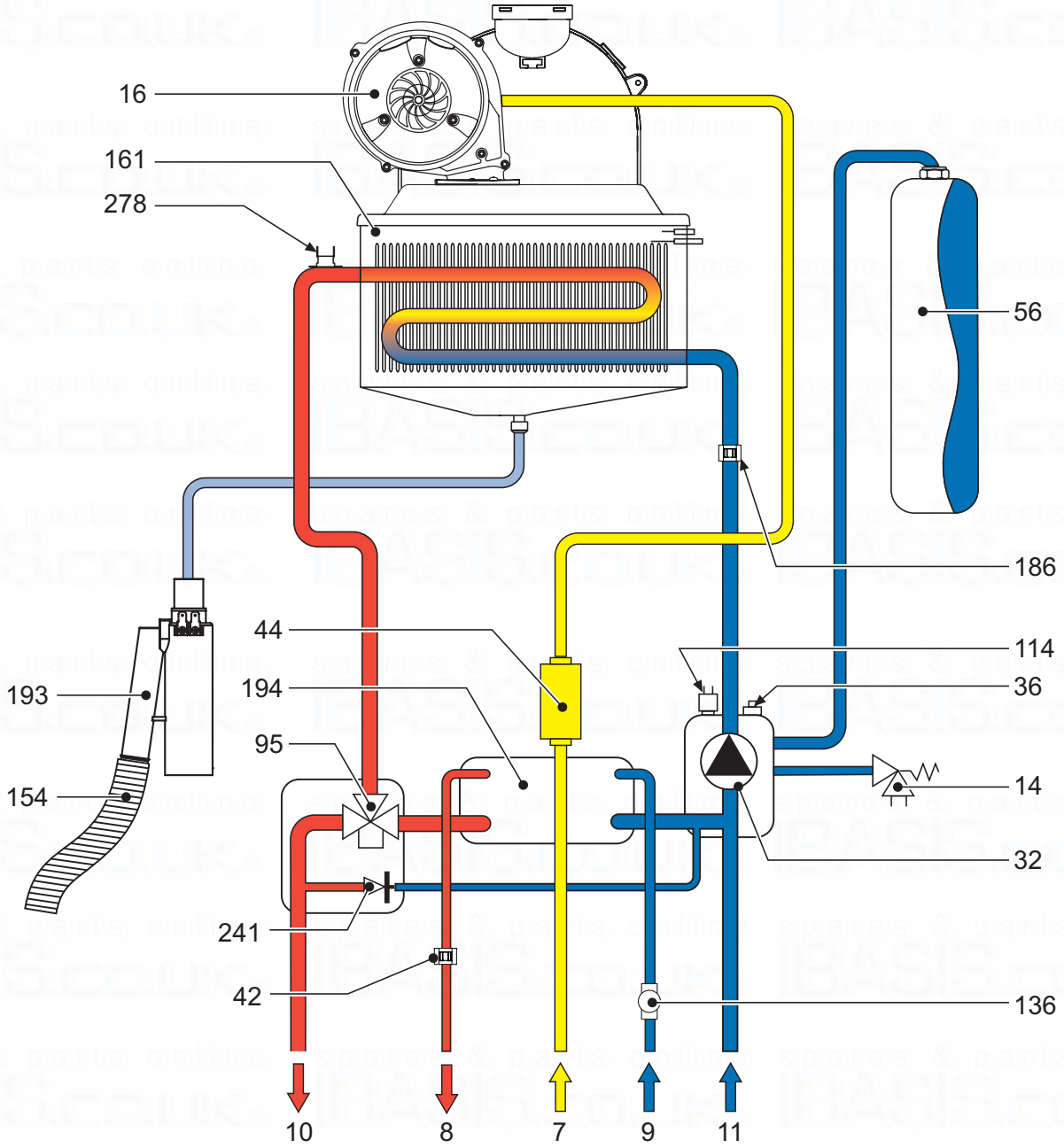

fig. 33

Key

7	Gas inlet
8	DHW outlet
9	Cold main inlet
10	CH flow
11	CH return
14	Heating Pressure Relief safety valve
16	Premix fan assembly
32	Heating pump
36	Automatic air vent
42	D.h.w. temperature sensor
44	Gas valve
56	Expansion vessel
95	Motorised Diverting valve
114	Water pressure switch
136	Flow meter
154	Condensate outlet pipe
161	Heat exchanger
186	Return temperature sensor
193	Siphon
194	Domestic plate Heat exchanger
241	Automatic by-pass valve
278	Double sensor (Safety + Heating)

4.4 Technical data table

Powers		Pmax	Pmin
Hi Heating power	kW	30.8	6.5
Hi DHW power	kW	38.5	6.5
Useful Heating Power 80° C - 60° C	kW	30.2	6.3
Useful Heating Power 50° C - 30° C	kW	32.5	6.9
Useful DHW Power	kW	37.7	6.3
Natural Gas delivery (G20)	m^3/h	4.07	0.69
Natural Gas supply pressure (G20)	mbar	20	
LPG flow rate (G31)	kg/h	3.01	0.51
LPG supply pressure (G31)	mbar	37	
Combustion		**Pmax**	**Pmin**
Seasonal Efficiency (SEDBUK)	%	90.4	
CO2 (G20 - Natural Gas)	%	9.0	8.7
Gas nozzle (G20 - Natural Gas)	Ø mm	8.2	
CO2 (G31 - Propane)	%	10	9.5
Gas nozzle (G31 - Propane)	Ø mm	5.1	
Flue temperature 80°C - 60°C	°C	65	60
Flue temperature 50°C - 30°C	°C	46	31
Flue flow rate	kg/h	64.8	11.3
Quantity of condensate	kg/h	3.3	1.4
pH of condensation water	pH	4,1	
Energy marking (92/42 EEC directive)		★★★★	
NOx emission class		5	
Heating			
Heating temperature adjustment range	°C	20 - 90	
Maximum working temperature in heating	°C	95	
Heating circuit PMS safety valve (preset)	bar	3	
Minimum working pressure in heating	bar	0.8	
Expansion vessel capacity	litres	10	
Expansion vessel pre-filling pressure	bar	1	
Total boiler water content	litres	2	
Hot water			
Hot tap water supply Δt 25° C	l/min	21.6	
Hot tap water supply Δt 30° C	l/min	18.0	
Hot tap water supply Δt 35° C	l/min	12.6	
Tap water temperature adjustment range	°C	40 - 55	
Maximum working pressure in hot water production	bar	9	
Minimum working pressure in hot water production	bar	0.25	
Dimensions, weights connections			
Height	mm	700	
Width	mm	450	
Depth	mm	330	
Weight empty	kg	42	
Gas system connection (with isolation valve fitted)	mm	Ø22	
Heating system connections (with isolation valve fitted)	mm	Ø22	
Hot water circuit connections (with isolation valve fitted)	mm	Ø15	
Maximum length of separate flues D=80* (*Measurement given in equivalent linear metres – cfr FERROLI calculation system)	m_{eq}	55	
Electrical power supply			
Max electrical power absorbed	W	140	
Electric power drawn by the circulator (Speed I-II-III)	W	60-65-70	
Electrical protection rating	IP	X5D	
Power voltage/frequency	V/Hz	230/50	

4.5 Diagrams

Head available for the system

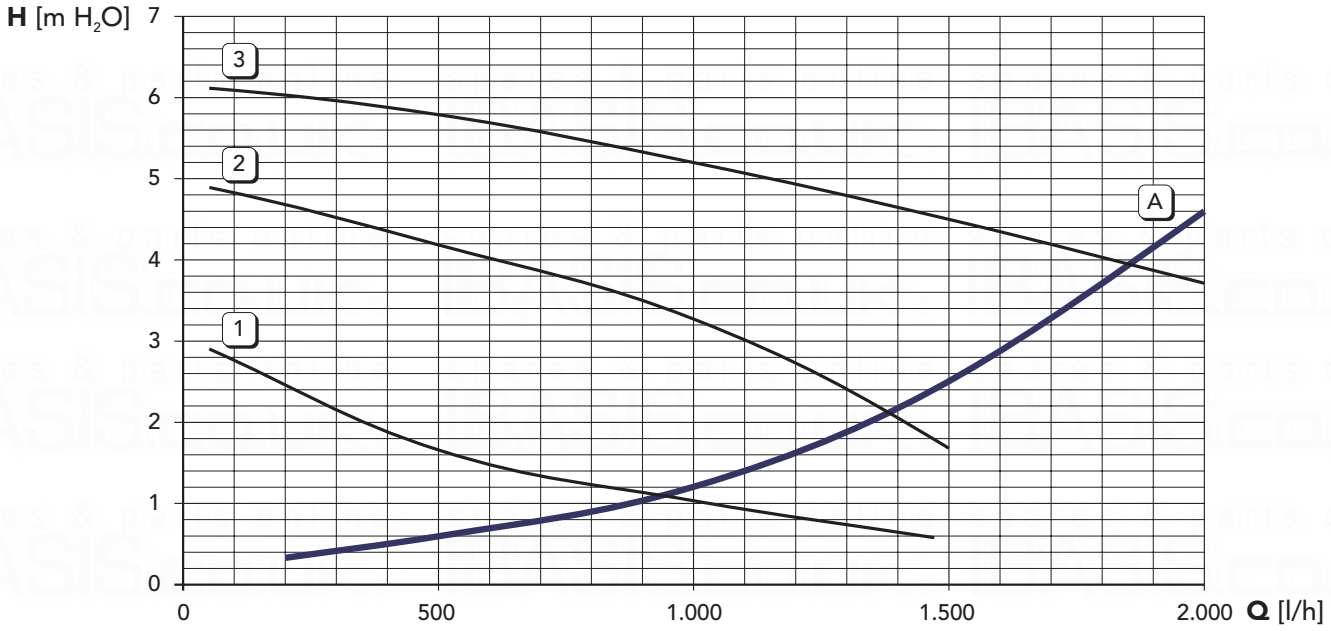

fig. 34

Key

1 - 2 - 3 = Pump selector positions
(In order to obtain maximum hot water output the pump must be left in position 3).

A =Boiler losses of head

4.6 Wiring diagram

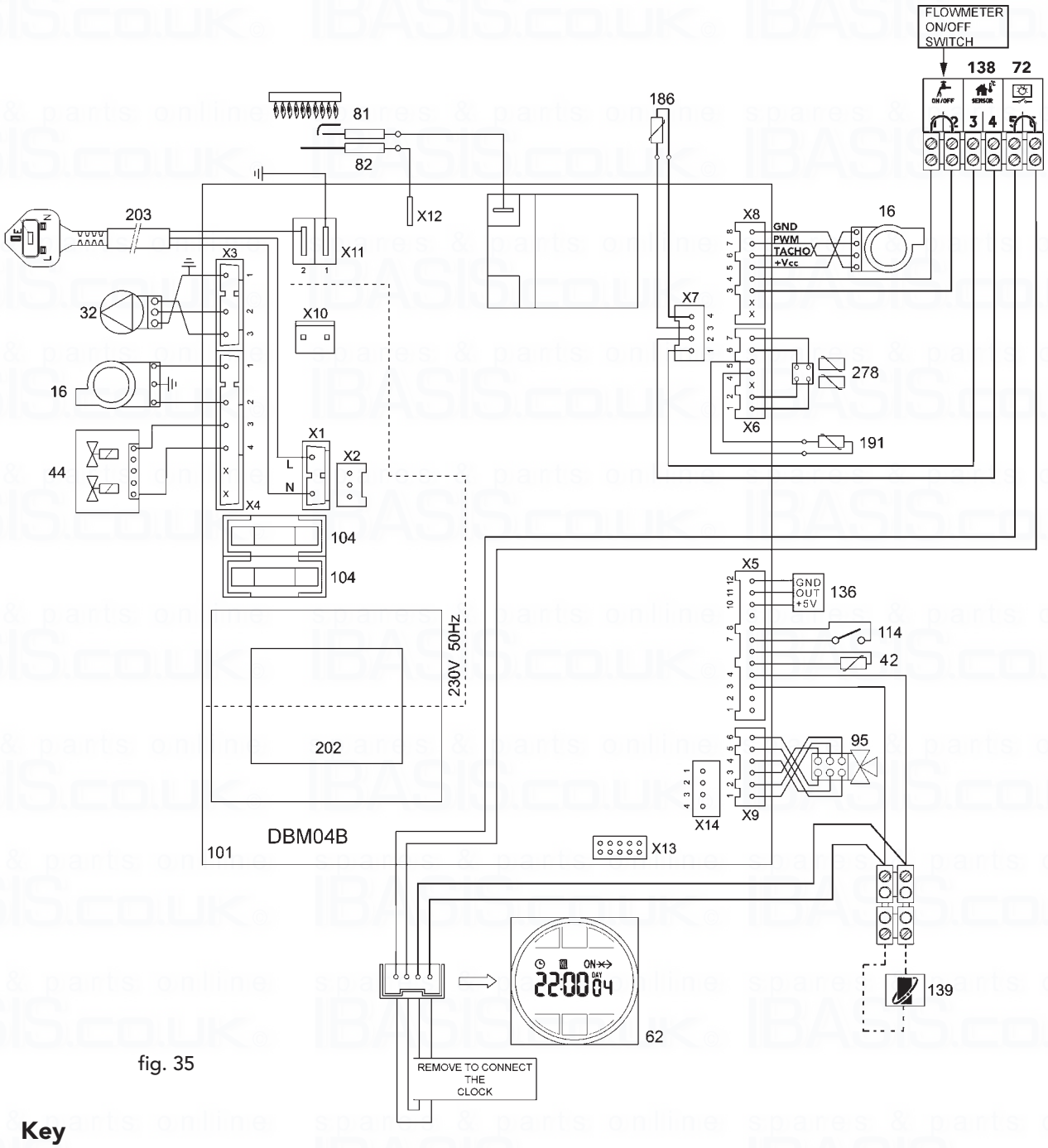

fig. 35

Key

16	Fan	**104**	Fuse
32	Central heating pump	**114**	Water pressure switch
42	D.h.w. temperature sensor	**136**	Flowmeter
44	Combination gas valve	**138**	Outside temperature sensor
62	Time clock (optional)	**139**	Room unit
72	Room thermostat	**186**	Return temperature sensor
81	Spark Electrode	**191**	Flue temperature sensor
82	Ionisation electrode	**202**	Transformer 230V-24V
95	Diverting valve	**203**	230v A/C switched supply
101	Main p.c.b.	**278**	Double sensor (Safety + Heating)

spares & parts online
IBASIS.CO.UK®

BENCHMARK No. 2 6 7 _ _ _

Please add the first 4 digits of the Boiler serial No to complete the BENCHMARK No.

benchmark™ COLLECTIVE MARK

GAS BOILER COMMISSIONING CHECKLIST

BOILER SERIAL No. _____ **NOTIFICATION No.** _____

CONTROLS *To comply with the Building Regulations, each section must have a tick in one or other of the boxes*

TIME & TEMPERATURE CONTROL TO HEATING	ROOM T/STAT & PROGRAMMER/TIMER	☐	PROGRAMMABLE ROOMSTAT	☐
TIME & TEMPERATURE CONTROL TO HOT WATER	CYLINDER T/STAT & PROGRAMMER/TIMER	☐	COMBI BOILER	☐
HEATING ZONE VALVES	FITTED	☐	NOT REQUIRED	☐
HOT WATER ZONE VALVES	FITTED	☐	NOT REQUIRED	☐
THERMOSTATIC RADIATOR VALVES	FITTED	☐		
AUTOMATIC BYPASS TO SYSTEM	FITTED	☐	NOT REQUIRED	☐

FOR ALL BOILERS CONFIRM THE FOLLOWING

THE SYSTEM HAS BEEN FLUSHED IN ACCORDANCE WITH THE BOILER MANUFACTURER'S INSTRUCTIONS? ☐

THE SYSTEM CLEANER USED

THE INHIBITOR USED

FOR THE CENTRAL HEATING MODE, MEASURE & RECORD

GAS RATE		m^3/hr		ft^3/hr
BURNER OPERATING PRESSURE (IF APPLICABLE)	☐	N/A		mbar
CENTRAL HEATING FLOW TEMPERATURE				°C
CENTRAL HEATING RETURN TEMPERATURE				°C

FOR COMBINATION BOILERS ONLY

HAS A WATER SCALE REDUCER BEEN FITTED? YES ☐ NO ☐

WHAT TYPE OF SCALE REDUCER HAS BEEN FITTED?

FOR THE DOMESTIC HOT WATER MODE, MEASURE & RECORD

GAS RATE		m^3/hr		ft^3/hr
MAXIMUM BURNER OPERATING PRESSURE (IF APPLICABLE)	☐	N/A		mbar
COLD WATER INLET TEMPERATURE				°C
HOT WATER OUTLET TEMPERATURE				°C
WATER FLOW RATE				lts/min

FOR CONDENSING BOILERS ONLY CONFIRM THE FOLLOWING

THE CONDENSATE DRAIN HAS BEEN INSTALLED IN ACCORDANCE WITH THE MANUFACTURER'S INSTRUCTIONS? YES ☐

FOR ALL INSTALLATIONS CONFIRM THE FOLLOWING

THE HEATING AND HOT WATER SYSTEM COMPLIES WITH CURRENT BUILDING REGULATIONS ☐

THE APPLIANCE AND ASSOCIATED EQUIPMENT HAS BEEN INSTALLED AND COMMISSIONED IN ACCORDANCE WITH THE MANUFACTURER'S INSTRUCTIONS ☐

IF REQUIRED BY THE MANUFACTURER, HAVE YOU RECORDED A CO/CO_2 RATIO READING? N/A ☐ YES _____ CO/CO_2 RATIO

THE OPERATION OF THE APPLIANCE AND SYSTEM CONTROLS HAVE BEEN DEMONSTRATED TO THE CUSTOMER ☐

THE MANUFACTURER'S LITERATURE HAS BEEN LEFT WITH THE CUSTOMER ☐

COMMISSIONING ENG'S NAME PRINT _____ CORGI ID No. _____

SIGN _____ DATE _____

SERVICE INTERVAL RECORD

It is recommended that your heating system is serviced regularly
and that you complete the appropriate Service Interval Record Below.

Service Provider. Before completing the appropriate Service Interval Record below, please ensure you have carried out the service as described in the boiler manufacturer's instructions. Always use the manufacturer's specified spare part when replacing all controls

SERVICE 1 DATE
ENGINEER NAME
COMPANY NAME
TEL No.
CORGI ID CARD SERIAL No.
COMMENTS
SIGNATURE

SERVICE 2 DATE
ENGINEER NAME
COMPANY NAME
TEL No.
CORGI ID CARD SERIAL No.
COMMENTS
SIGNATURE

SERVICE 3 DATE
ENGINEER NAME
COMPANY NAME
TEL No.
CORGI ID CARD SERIAL No.
COMMENTS
SIGNATURE

SERVICE 4 DATE
ENGINEER NAME
COMPANY NAME
TEL No.
CORGI ID CARD SERIAL No.
COMMENTS
SIGNATURE

SERVICE 5 DATE
ENGINEER NAME
COMPANY NAME
TEL No.
CORGI ID CARD SERIAL No.
COMMENTS
SIGNATURE

SERVICE 6 DATE
ENGINEER NAME
COMPANY NAME
TEL No.
CORGI ID CARD SERIAL No.
COMMENTS
SIGNATURE

SERVICE 7 DATE
ENGINEER NAME
COMPANY NAME
TEL No.
CORGI ID CARD SERIAL No.
COMMENTS
SIGNATURE

SERVICE 8 DATE
ENGINEER NAME
COMPANY NAME
TEL No.
CORGI ID CARD SERIAL No.
COMMENTS
SIGNATURE

SERVICE 9 DATE
ENGINEER NAME
COMPANY NAME
TEL No.
CORGI ID CARD SERIAL No.
COMMENTS
SIGNATURE

SERVICE 10 DATE
ENGINEER NAME
COMPANY NAME
TEL No.
CORGI ID CARD SERIAL No.
COMMENTS
SIGNATURE

FERROLI TECHNICAL HELPLINE - 08707 282 885

Should you require any assistance during the installation call our Technical Service Helpline on 08707 282 885 option 1

Should you require a service engineer to visit call our service centre on 08707 282 885 option 2

Phone numbers:

Installer _____

Service Engineer _____

BECAUSE OF OUR CONSTANT ENDEAVOUR FOR IMPROVEMENT DETAILS MAY VARY SLIGHTLY FROM THOSE QUOTED IN THESE INSTRUCTIONS.

Ferroli

ALL SPECIFICATIONS SUBJECT TO CHANGE

Please note - to avoid incurring unnecessary expense, in the event of a boiler shut down, check this is not caused by lack of electricity supply, gas supply or low water pressure before calling our Customer Service Helpline.

Lichfield Road, Branston Industrial Estate, Burton Upon Trent, Staffordshire DE14 3HD
Tel. 08707 282 885 - Fax 08707 282 886

spares & parts online IBASIS.CO.UK