Ferroli

GRUPPO FERROLI

DOMIcondens HE 26 C

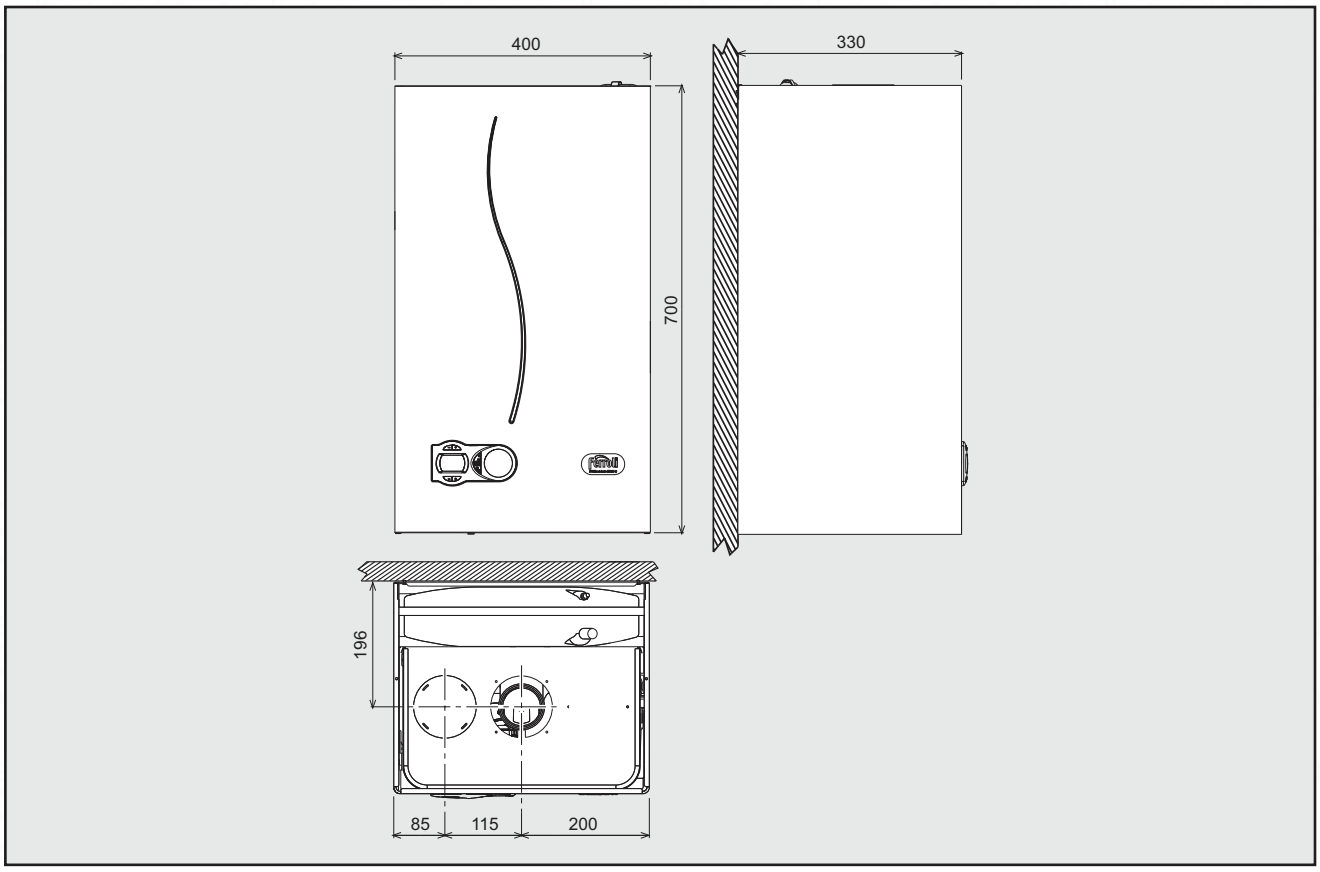

cod. 3540Z852 – Rev. 01 - 08/2012

CE

INSTRUCTIONS FOR USE, INSTALLATION AND MAINTENANCE

spares & parts online IBASIS.CO.UK

IMPORTANT

- **Your "benchmark" Installation, Commissioning and Service Record Log Book is enclosed in the last pages of this manual. "This record must be completed and left with the end user".**
  Ferroli is a member of the Benchmark initiative and fully supports the aims of the programme. Benchmark has been introduced to improve the standards of installation and commissioning of central heating systems in the UK and to encourage the regular servicing of all central heating systems to ensure safety and efficiency. Please see installation and servicing guidelines.
- **"Ferroli declare that no substances harmful to health are contained in the appliance or used during the appliance manufacture".**

⚠	This symbol indicates **"Caution"** and is placed next to all safety warnings. Strictly follow these instructions in order to avoid danger and damage to persons, animals and things.
☞	This symbols calls attention to a note or important notice.

Declaration of conformity

CE

Manufacturer: FERROLI S.p.A.
Address: Via Ritonda 78/a 37047 San Bonifacio VR Italy
declares that this unit complies with the following EU directives:

- Gas Appliance Directive 2009/142
- Efficiency Directive 92/42
- Low Voltage Directive 2006/95
- Electromagnetic Compatibility Directive 2004/108

President and Legal Representative
Cav. del Lavoro
Dante Ferroli

cod. 3540Z852 - Rev. 01 - 08/2012

EN

1. GENERAL WARNINGS

- Carefully read and follow the instructions contained in this instruction booklet.
- After boiler installation, inform the user regarding its operation and give him this manual, which is an integral and essential part of the product and must be kept with care for future reference.
- Installation and maintenance must be carried out by professionally qualified personnel, in compliance with the current regulations and according to the manufacturer's instructions. Do not carry out any operation on the sealed control parts.
- Incorrect installation or inadequate maintenance can result in damage or injury. The Manufacturer declines any liability for damage due to errors in installation and use, or failure to follow the instructions.
- Before carrying out any cleaning or maintenance operation, disconnect the unit from the electrical power supply using the switch and/or the special cut-off devices.
- In case of a fault and/or poor operation, deactivate the unit and do not try to repair it or directly intervene. Contact professionally qualified personnel. Any repair/replacement of the products must only be carried out by qualified personnel using original replacement parts. Failure to comply with the above could affect the safety of the unit.
- This unit must only be used for its intended purpose. Any other use is deemed improper and therefore hazardous.
- The packing materials are potentially hazardous and must not be left within the reach of children.
- The unit must not be used by people (including children) with limited physical, sensory or mental abilities or without experience and knowledge of it, unless instructed or supervised in its use by someone responsible for their safety.
- The unit and its accessories must be appropriately disposed of, in compliance with the current regulations.
- The images given in this manual are a simplified representation of the product. In this representation there may be slight and insignificant differences with respect to the product supplied.

2. OPERATING INSTRUCTIONS

2.1 Introduction

Dear Customer,

DOMIcondens HE 26 C is a high-efficiency sealed chamber **condensing** heat generator for heating and hot water production running on natural gas or LPG, and equipped with a microprocessor control system.

2.2 Control panel

Panel

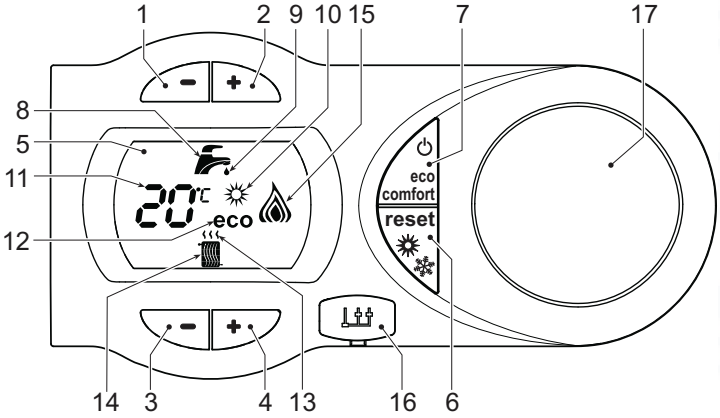

fig. 1 - Control panel

Panel key fig. 1

1	DHW temperature setting decrease button
2	DHW temperature setting increase button
3	Heating system temperature setting decrease button
4	Heating system temperature setting increase button
5	Display
6	"Sliding Temperature" Menu - Summer/Winter mode selection - Reset button
7	Unit On/Off - Economy/Comfort mode selection button
8	DHW symbol
9	DHW mode
10	Summer mode
11	Multifunction
12	Eco (Economy) mode
13	Heating
14	Heating symbol
15	Burner lit and actual power level (flashing during combustion fault function)
16	Service Tool connection
17	Arrangement for clock

Indication during operation

Heating

A heating demand (generated by the Room Thermostat or Remote Timer Control) is indicated by flashing of the hot air above the radiator on the display.

The display (detail 11 - fig. 1) shows the actual heating delivery temperature and, during heating standby time, the message **"d2"**.

Domestic hot water (DHW)

A DHW demand (generated by drawing domestic hot water) is indicated by flashing of the hot water under the tap on the display.

The display (detail 11 - fig. 1) shows the actual DHW outlet temperature and, during DHW standby time, the message **"d1"**.

Comfort

A Comfort demand (reinstatement of temperature inside the boiler) is indicated by flashing of the water under the tap on the display. The display (detail 11 - fig. 1) shows the actual temperature of the water in the boiler.

Fault

In case of a fault (see cap. 4.4) the display shows the fault code (detail 11 - fig. 1) and, during safety standby times, the messages **"d3"** and **"d4"**.

2.3 Lighting and turning off

Connection to the power supply

- During the first 5 seconds the display will also show the card software release.
- Open the gas cock ahead of the boiler.
- The boiler is now ready to function automatically whenever domestic hot water is drawn or in case of a heating demand (generated by Room Thermostat or Remote Temperature Control).

Turning the boiler off and on

Press the **on/off** button (detail 7 - fig. 1) for 5 seconds.

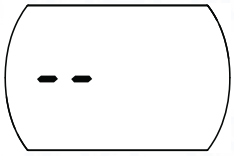

fig. 2 - Turning the boiler off

When the boiler is turned off, the PCB is still powered. Domestic hot water and heating are disabled. The antifreeze system remains activated. To relight the boiler, press the **on/off** button (detail 7 - fig. 1) again for 5 seconds.

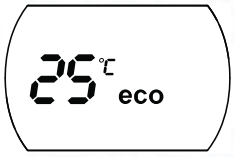

fig. 3

The boiler will be immediately ready to work whenever domestic hot water is drawn or in case of a heating demand (generated by the Room Thermostat or the Remote Timer control).

The antifreeze system does not work when the power and/or gas to the unit are turned off. To avoid damage caused by freezing during long idle periods in winter, it is advisable to drain all water from the boiler, DHW circuit and system; or drain just the DHW circuit and add a suitable antifreeze to the heating system, complying with that prescribed in sec. 3.3.

2.4 Adjustments

Summer/Winter Switchover

Press the **summer/winter** button (detail 6 - fig. 1) for 2 seconds.

The display activates the Summer symbol (detail 10 - fig. 1): the boiler will only deliver domestic hot water. The antifreeze system remains activated.

To deactivate the Summer mode, press the **summer/winter** button (detail 6 - fig. 1) again for 2 seconds.

Heating temperature adjustment

Use the heating buttons (details 3 and 4 - fig. 1) to vary the temperature from a min. of 30°C to a max. of 80°C; in any case, it is advisable not to operate the boiler below 45°C.

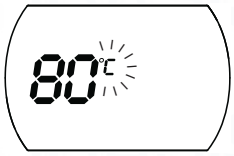

fig. 4

DHW temperature adjustment

Use the DHW buttons (details 1 and 2 - fig. 1) to adjust the temperature from a min. of 40°C to a max. of 50°C.

fig. 5

Room temperature adjustment (with optional room thermostat)

Using the room thermostat, set the temperature required in the rooms. If the room thermostat is not installed, the boiler will keep the system at the set system delivery setpoint temperature.

Room temperature adjustment (with optional remote timer control)

Using the remote timer control, set the required temperature in the rooms. The boiler will adjust the system water according to the required room temperature. For operation with remote timer control, please refer to the relevant instruction manual.

ECO/COMFORT selection

The unit has a function that ensures a high domestic hot water delivery speed and maximum comfort for the user. When the device is activated (COMFORT mode), the water contained in the boiler is kept hot, thereby ensuring immediate availability of hot water on opening the tap, without waiting times.

The user can deactivate the device (ECO mode) by pressing the **eco/comfort** button (detail 7 - fig. 1). In ECO mode the display activates the ECO symbol (detail 12 - fig. 1). To activate the COMFORT mode, press the **eco/comfort** button (detail 7 - fig. 1) again.

Sliding Temperature

When the optional external probe is installed, the boiler adjustment system works with "Sliding Temperature". In this mode, the temperature of the heating system is controlled according to the outside weather conditions, to ensure high comfort and energy saving throughout the year. In particular, the system delivery temperature is decreased as the outside temperature increases, according to a specific "compensation curve".

With Sliding Temperature adjustment, the temperature set with the heating buttons (detail 3 - fig. 1) becomes the maximum system delivery temperature. It is advisable to set a maximum value to allow system adjustment throughout its useful operating range.

The boiler must be adjusted at the time of installation by qualified personnel. Possible adjustments can in any case be made by the user to improve comfort.

Compensation curve and curve offset

Press the **reset** button (detail 6 - fig. 1) for 5 seconds to access the "Sliding temperature" menu; the display shows "CU" flashing.

Use the DHW buttons (detail 1 - fig. 1) to adjust the curve from 1 to 10 according to the characteristic. By setting the curve to 0, sliding temperature adjustment is disabled.

Press the heating buttons (detail 3 - fig. 1) to access parallel curve offset; the display shows "OF" flashing. Use the DHW buttons (detail 1 - fig. 1) to adjust the parallel curve offset according to the characteristic (fig. 6).

Press the **reset** button (detail 6 - fig. 1) again for 5 seconds to exit the "Sliding Temperature" menu.

If the room temperature is lower than the required value, it is advisable to set a higher order curve and vice versa. Proceed by increasing or decreasing in steps of one and check the result in the room.

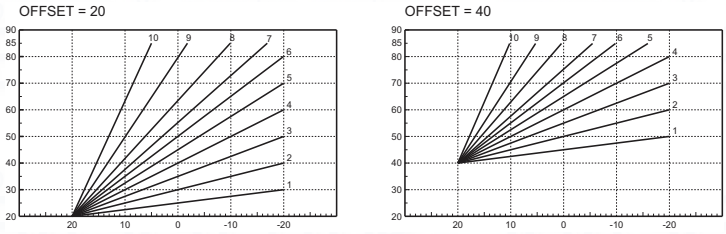

fig. 6 - Example of compensation parallel curve offset

Adjustments from Remote Timer Control

If the Remote Timer Control (optional) is connected to the boiler, the above adjustments are managed according to that given in table 1.

Table. 1

Heating temperature setting	Adjustment can be made from the Remote Timer Control menu and the boiler control panel.
Hot water temperature adjustment	Adjustment can be made from the Remote Timer Control menu and the boiler control panel.
Summer/Winter Switchover	Summer mode has priority over a possible Remote Timer Control heating demand.
Eco/Comfort selection	Adjustment can only be made from the boiler control panel.

Water system pressure regulation

The filling pressure read on the boiler water gauge with the system cold must be approx 1.0 bar. If the system pressure falls to values below minimum, the boiler stops and fault **F37** is displayed.

3. INSTALLATION

3.1 General Instructions

This unit must only be used for its intended purpose. This unit is designed to heat water to a temperature below boiling point and must be connected to a heating system and/or a water supply system for domestic use, compatible with its performance, characteristics and its heating capacity. Any other use is deemed improper.

BOILER INSTALLATION MUST ONLY BE CARRIED OUT BY QUALIFIED PERSONNEL, IN ACCORDANCE WITH ALL THE INSTRUCTIONS GIVEN IN THIS TECHNICAL MANUAL, THE PROVISIONS OF CURRENT LAW, THE PRESCRIPTIONS OF THE TECHNICAL STANDARDS (BS), ANY LOCAL REGULATIONS AND THE RULES OF PROPER WORKMANSHIP.

Incorrect installation can cause damage or injury for which the manufacturer declines any responsibility.

Installation of this unit must be carried out in strict compliance with the present instructions and the following regulations applicable in Great Britain.

Gas Safety Regulations (Installations & Use).

Local Building Regulations..

The Building Regulations (Part L).

The Buildings Standards (Scotland - Consolidated) Regulations. British Standards Codes of Practice (BSI):

B.S.	5440	Detail 1	Flues
B.S.	5440	Detail 2	Air supply and ventilation
B.S.	5449	.....	Systems for hot water production with forced circulation
B.S.	6798	.....	Installation of gas-fired boilers for hot water
B.S.	6891	.....	Gas systems
B.S.	7671	.....	IEE wiring system regulations
B.S.	4814	.....	Specifications for expansion tanks
B.S.	5482	.....	LPG systems
B.S.	7593	.....	Water treatment in central heating systems for domestic hot water production
B.S.	5546	.....	Installation of systems for domestic hot water production

Model Water By-Laws

B.S.	5955-8	.....	Installation of plastic pipes

For Northern Ireland, observe the current applicable regulations.

Safe handling of materials

Pay attention when handling the boiler insulation panels because the material they are made of could irritate the skin. No part of the boiler contains asbestos, mercury or CFC's.

Advice for transport and handling

For lifting and transport always take suitable safety precautions: keep your back straight, bend knees, do not turn your body, move feet, avoid bending forward or sideways and keep the load as close as possible to your body.

If possible, use a trolley or other suitable means to carry the boiler.

Grip the boiler firmly and, before lifting it, try and find the point where the load is concentrated in order to establish the centre of gravity and suitably reposition yourself.

3.2 Place of installation

The combustion circuit is sealed with respect to the place of installation, therefore the unit can be installed in any room. However, the place of installation must be sufficiently ventilated to prevent the creation of dangerous conditions in case of even small gas leaks. This safety standard is required by the EEC Directive no. 2009/142 for all gas units, including those with sealed chamber

The unit is suitable for operation in a partially protected place in compliance with EN 297 pr A6, for temperatures to -5°C. It is advisable to install the boiler under the slope of a roof, inside a balcony or in a sheltered recess.

Therefore the place of installation must be free of dust, flammable materials or objects or corrosive gases.

The boiler is arranged for wall mounting and comes standard with a hooking bracket. Fix the bracket to the wall according to the measurements given in the cover drawing and hook the boiler on it. A metal template for marking the drilling points on the wall is available by request. The wall fixing must ensure stable and effective support for the generator.

If the unit is enclosed in a cabinet or mounted alongside, a space must be provided for removing the casing and for normal maintenance operations

3.3 Plumbing connections

Important

The heating capacity of the unit must be previously established by calculating the building's heat requirement according to the current regulations. To ensure proper operation and long boiler life, the plumbing system must be adequately sized and complete with all the necessary accessories, including a room thermostat, a thermostattable valve (TRV) etc. The system delivery and return pipes must have a diameter of at least 22 mm for the first 3 m of length from the unit.

If the system delivery and return pipes follow a path where air pockets can form in certain places, it is advisable to install vent valves at these points. Also, type "A" drain cocks must be installed at the lowest points in the system to allow complete emptying.

⚠ An automatic bypass with flow rate of at least 6 l/min. must be installed (connected as far away as possible from the boiler) if radiators with thermostatic valves have been connected.

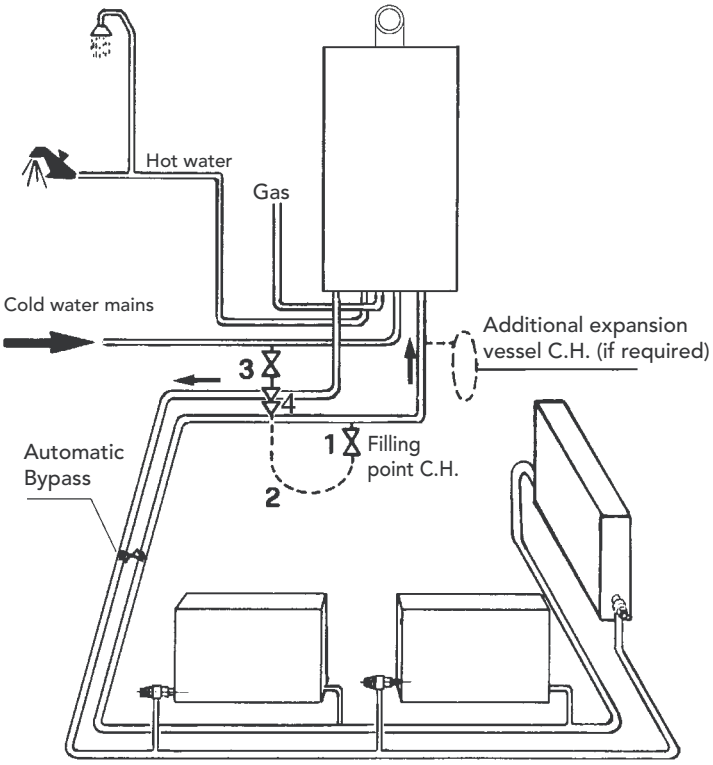

fig. 7 - Automatic bypass connection

The temperature drop between the delivery manifold and the return to the boiler should not exceed 20°C.

⚠ Do not use the water system pipes to earth electrical appliances.

Before installation, carefully wash all the pipes of the heating system to remove any residuals or impurities that could affect proper operation of the unit (as required by BS 7593 Building regs Doc L).

Carry out the connections to the unit as indicated in fig. 8.

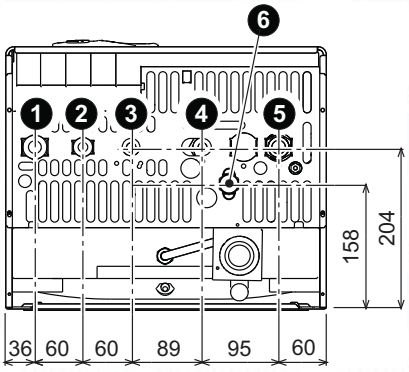

fig. 8 - Plumbing connections

Shutoff valve kit

Make sure to install the shutoff valves (supplied) between the boiler and the heating system, allowing the boiler to be isolated from the system if necessary.

⚠ The safety valve outlet must be connected to a copper pipe of 15 mm diameter with continuous fall from the boiler to run off the system water in case of overpressure in the heating circuit. Otherwise, if the discharge valve cuts in and floods the room, the boiler manufacturer cannot be held liable. The drain must be run to the outside of the building to avoid the risk of damage or injury due to the hot water in case of overpressure in the system.

Make the boiler connection in such a way that its internal pipes are free of stress. If a non-return valve is installed also on the DHW circuit (if provided for), it is necessary to install a safety valve between the boiler and the circuit (with the non-return valve at least 3 m from the boiler) or an expansion tank for domestic use.

For installation, follow the instructions contained in the kit.

Replenishing water

It is necessary to provide for replenishing of the water lost by the sealed system. Refer to **standard BS6798** for the methods of filling and replenishing water in sealed systems. There must not be a direct connection between the central heating system of the boiler and the water mains. For the use of water coming from the water mains and direct pressurisation of the system, refer to the local water management by-laws. This connection must be interrupted after use.

The boiler comes standard with the connection (filling loop) shown in fig. 9. For installation, follow the instructions given on the instruction sheet enclosed with the kit

To replenish the water in the system:

- Fix the removable **connection "1"** between the two valves.
- Open the two cocks **"2 and 3"** until the pressure read on the water gauge is approx. 1 bar.
- Close the two cocks **"2 and 3"**.
- At the end of the operation, remove the removable connection **"1"**.

Reference is made to the provisions contained in the water management by-laws.

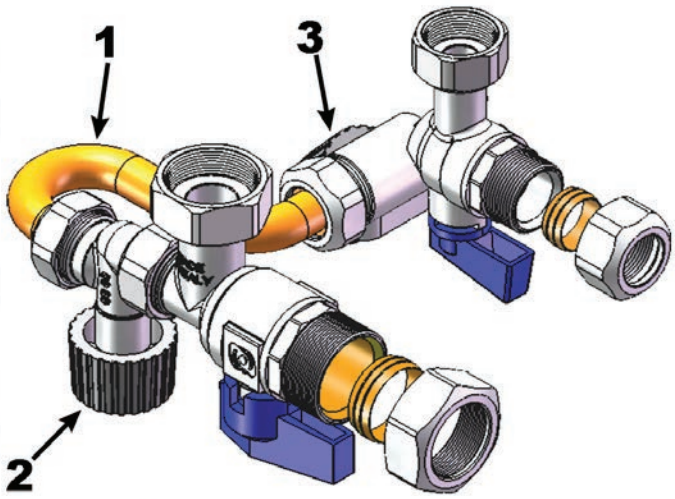

fig. 9 - Filling loop

Water treatment

If water treatment is necessary, Ferroli recommends the exclusive use of specific products such as Fernox or Sentinel to be applied according to the producer's instructions. For further information, please contact:

Fernox Manufacturing Co. LTD.
Cookson Electronics, Forsyth Road
Sheerwater, Woking, Surrey, GU21 5RZ
Tel.: 0870 8700362

Sentinel Performance Solutions Ltd
The Heath Business & Technical Park
Runcorn, Cheshire WA7 4QX
Tel.: 0151 424 5351

☞ If the boiler is installed in an existing system, any unsuitable additives must be removed by thoroughly cleaning the system. Cleaning of all the systems must be done in compliance with the requirements of standard B.S. 7593.

☞ In areas with hard water, treatment may be necessary in order to prevent scale from forming in the boiler.

☞ Make sure to use the water treatment product in the right concentration, according to the producer's instructions.

3.4 Gas connection

The gas must be connected to the relevant union (see figure on cover) in conformity with the current regulations, with a rigid metal pipe or with a continuous surface flexible s/steel tube, installing a gas cock between the system and boiler. Make sure all the gas connections are tight.

3.5 Electrical connections

Important

The unit must be connected to an efficient earthing system in conformity with current safety regulations. Have the efficiency and suitability of the earthing system checked by professionally qualified personnel; the Manufacturer declines any liability for damage caused by failure to earth the system.

The boiler is prewired and provided with a "Y" type cable (without plug) for connection to the electric line. The connections to the power supply must be permanent and equipped with a double-pole switch with contact opening distance of at least 3 mm, installing fuses of max. 3A between the boiler and the line. Make sure to respect the polarities (LINE: brown wire / NEUTRAL: blue wire / EARTH: yellow/green wire) in connections to the electric line.

The unit's power cable must not be replaced by the user; if damaged, switch the unit off and have the cable replaced by professionally qualified personnel. If replacing the power cable, only use **"HAR H05 VV-F"** 3x0.75 mm2 cable with max. ext. diameter of 8 mm.

Room thermostat (optional)

IMPORTANT: THE ROOM THERMOSTAT MUST HAVE VOLTAGE-FREE CONTACTS. CONNECTING 230 V TO THE ROOM THERMOSTAT TERMINALS WILL PERMANENTLY DAMAGE THE ELECTRONIC BOARD.

When connecting time controls or a timer, do not take the power supply for these devices from their breaking contacts Their power supply must be by means of direct connection from the mains or with batteries, depending on the kind of device.

Accessing the electrical terminal block

Follow the instructions given in fig. 10 to access the electrical connections terminal block. The layout of the terminals for the various connections is also given in the wiring diagram in fig. 26.

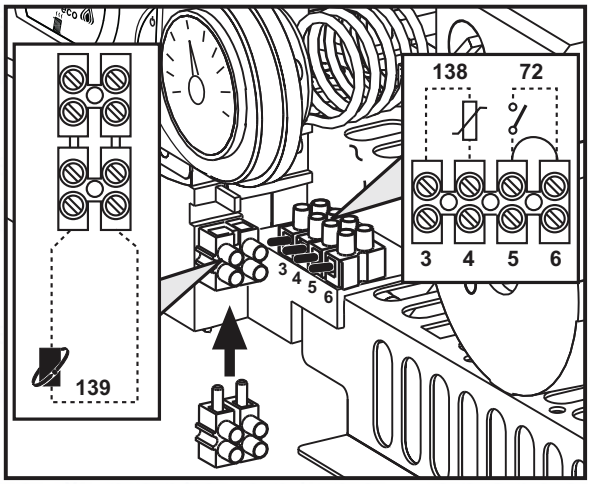

fig. 10 - Accessing the terminal block

3.6 Fume ducts

Important

The unit is "type C" with sealed chamber and forced draught; the air inlet and fume outlet must be connected to one of the following extraction/suction systems. Before installation, check and carefully observe the above prescriptions. Also, comply with the provisions concerning the positioning of wall and/or roof terminals and the minimum distances from windows, walls, vents, etc.

Expansion

For fume exhaust pipes longer than 1 metre, during installation take in account the natural expansion of the materials when the boiler is operating.

To prevent any deformation, leave an expansion space of approx. 2 ÷ 4 mm for every metre of pipe.

Baffles

Boiler operation requires fitting the baffles supplied with the unit, according to that given in the following tables.

Before inserting the fume exhaust pipe, check the presence of the right baffle (when it is to be used) and that it is correctly positioned. The boilers are fitted standard with the smallest diameter baffle. To replace the baffle (ref. 1 - fig. 11), proceed as indicated in fig. 11.

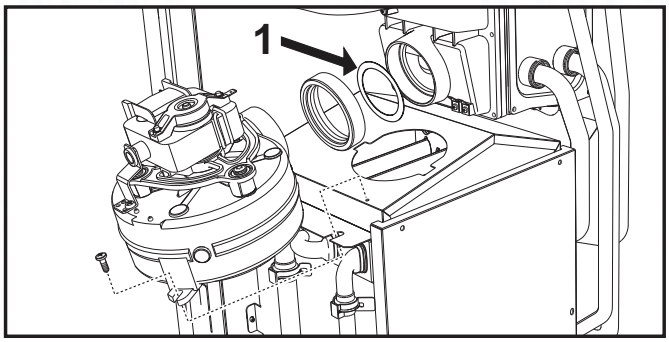

fig. 11

Connection with coaxial pipes

Standard coaxial installation

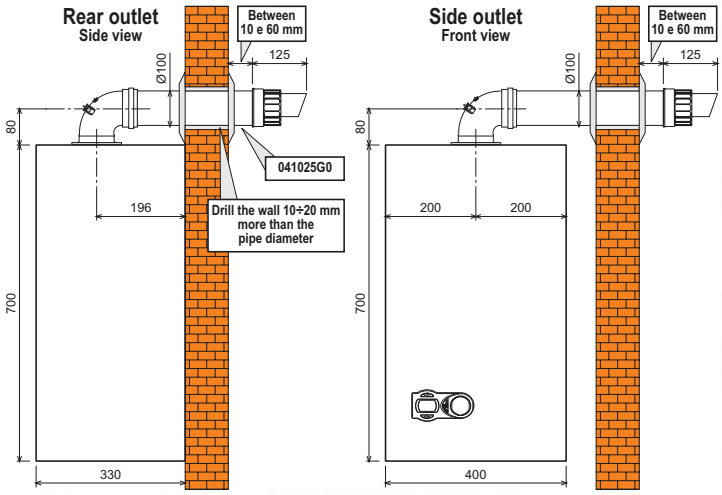

fig. 12 - Standard coaxial installation

Other coaxial connections

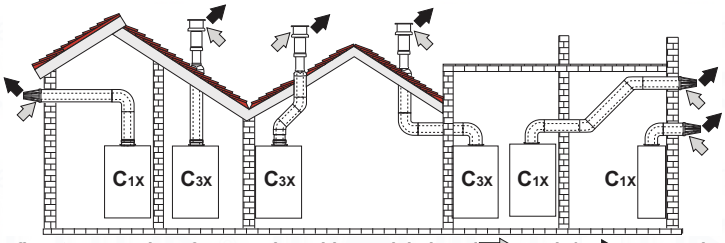

fig. 13 - Examples of connection with coaxial pipes (= Air / = Fumes)

Table. 2 - Typology

Type	Description
C1X	Wall horizontal exhaust and inlet
C3X	Roof vertical exhaust and inlet

For coaxial connection, fit the unit with one of the following starting accessories. For the wall hole dimensions, refer to the figure on the cover. Any horizontal sections of the fume exhaust must be kept sloping slightly towards the outside, to prevent condensate from flowing back towards the unit.

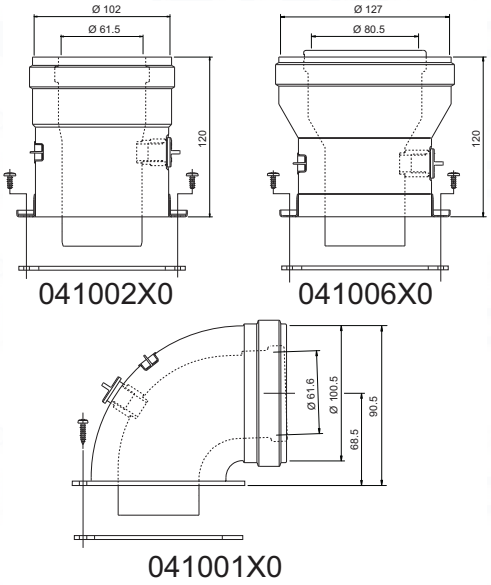

fig. 14 - Starting accessory for coaxial ducts

Table. 3 - Baffles for coaxial ducts

	Coaxial 60/100		Coaxial 80/125	
Max. permissible length	6 m		12 m	
Reduction factor 90° bend	1 m		0.5 m	
Reduction factor 45° bend	0.5 m		0.25 m	
Baffle to use	0 ÷ 2 m	Ø 45	0 ÷ 6 m	Ø 45
	2 ÷ 4 m	Ø 50	6 ÷ 12 m	no baffle
	4 ÷ 6 m	no baffle		

Connection with separate pipes

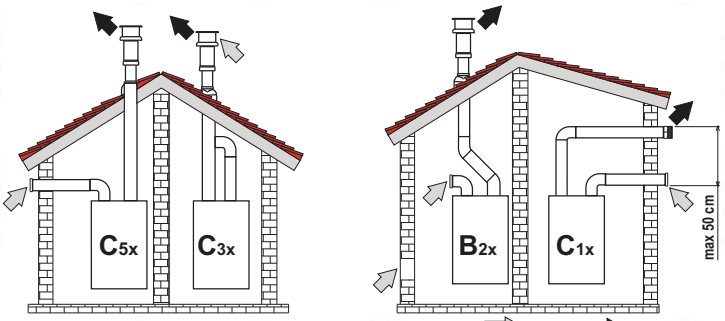

fig. 15 - Examples of connection with separate pipes (⇨ = Air / ➡ = Fumes)

Table. 4 - Typology

Type	Description
C1X	Wall horizontal exhaust and intake. The inlet/outlet terminals must be concentric or close enough to be undergo similar wind conditions (within 50 cm)
C3X	Roof vertical exhaust and intake. Inlet/outlet terminals like for C12
C5X	Wall or roof exhaust and intake separate or in any case in areas with different pressures. The exhaust and intake must not be positioned on opposite walls.
C6X	Intake and exhaust with separately certified pipes (EN 1856/1)
B2X	Intake from installation room and wall or roof exhaust ⚠ **IMPORTANT - THE ROOM MUST BE PROVIDED WITH APPROPRIATE VENTILATION**

For connection of the separate ducts, fit the unit with the following starting accessory:

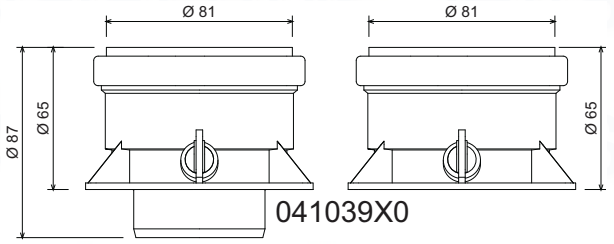

fig. 16 - Starting accessory for separate ducts

Before installation, check the baffle to be used and make sure the maximum permissible length has not been exceeded, by means of a simple calculation:

1. Completely establish the layout of the system of split flues, including accessories and outlet terminals.
2. Consult the table 6 and identify the losses in m_{eq} (equivalent metres) of every component, according to the installation position.
3. Check that the sum total of losses is less than or equal to the maximum permissible length in table 5.

Table. 5 - Baffles for separate ducts

	Separate ducts	
Max. permissible length	55 m_{eq}	
Baffle to use	0 ÷ 15 m_{eq}	Ø 45
	15 ÷ 35 m_{eq}	Ø 50
	35 ÷ 55 m_{eq}	No baffle

Table. 6 - Accessories

				Losses in m_{eq}		
				Air inlet	Fume exhaust	
					Vertical	Horizontal
Ø 80	PIPE	1 m M/F	1KWMA83W	1.0	1.6	2.0
	BEND	45° M/F	1KWMA65W	1.2	1.8	
		90° M/F	1KWMA01W	1,5	2.0	
	PIPE SECTION	with test point	1KWMA70W	0.3	0.3	
	TERMINAL	air, wall	1KWMA85A	2.0	-	
		fumes, wall with antiwind	1KWMA86A	-	5.0	
	FLUE	Split air/fumes 80/80	010027X0	-	12.0	
		Fume outlet only Ø80	010026X0 + 1KWMA86U	-	4.0	
Ø 60	PIPE	1 m M/F	1KWMA89W		6.0	
	BEND	90° M/F	1KWMA88W		4.5	
	REDUCTION	80/60	041050X0		5.0	
	TERMINAL	fumes, wall with antiwind	1KWMA90A		7.0	
	⚠	**ATTENTION: CONSIDER THE HIGH PRESSURE LOSSES OF Ø60 ACCESSORIES; USE THEM ONLY IF NECESSARY AND AT THE LAST FUME EXHAUST SECTION.**				

Position of terminals

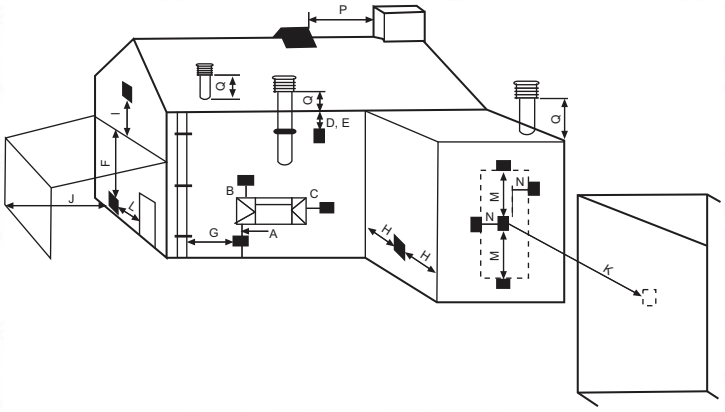

fig. 17

Minimum dimensions of fume exhaust terminals		
A	Directly under an opening, air inlet, openable window, etc.	300 mm
B	Above an opening, air inlet, openable window, etc.	300 mm
C	Horizontally to an opening, air inlet, openable window, etc.	300 mm
D	Under gutters, drain pipes	75 mm
E	Under cornices or under eaves	200 mm
F	Under balconies or garages	200 mm
G	From a drain pipe or a vertical drain pipe	150 mm
H	From an internal or external corner	100 mm
I	Above ground level, a roof or balcony	300 mm
J	From a surface facing the terminal	600 mm
K	From a terminal facing the terminal	1200 mm
litres	From a garage opening (e.g. door, window) with access to the home	1200 mm
M	Vertically from a terminal on the same wall	1500 mm
No	Horizontally from a terminal on the same wall	300 mm
O	From the wall on which the terminal is fitted	N/A
P	From a vertical structure on the roof	150 mm
Q	Above the intersection with the roof	300 mm
NOTES	• **N/A = Not applicable** • Also, the terminal must be at least 150 mm (in case of forced intake) from an opening made in the structure of the building to house a fitted element such as a window frame. • Positions of condensate drain terminals: if the fume exhaust is provided for at a low level, the potential effect of the flue gas cloud must be considered. Special flue gas management kits are available by request. • The flue gas cloud must not be directed towards: - A frequented approach - A window or door - An adjacent property	

Connection to multiple flues or single flues with natural draught

To connect the **DOMIcondens HE 26 C** boiler to a multiple flue or a single flue with natural draught, the flue or chimney must be expressly designed by professionally qualified technical personnel in conformity with the current standards and regulations.

In particular, flues and chimneys must:

- Be sized according to the method of calculation given in the standard.
- Be tight with respect to the products of combustion, resistant to the fumes and heat and impermeable to condensate.
- Have a circular or square cross-section (some hydraulically equivalent sections are permissible), with a vertical progression and with no constrictions.
- Have the ducts conveying the hot fumes at a suitable distance or separately from combustible materials.
- Be connected to just one unit per floor, for not more than 6 units (8 if there is a compensation duct or opening).
- Have no mechanical suction devices in the main ducts.
- Be at low pressure, all along their length, in conditions of stationary operation.
- Have at their base a collection chamber for solid materials or condensate, of at least 0.5 m, equipped with an airtight metal door.

3.7 Condensate drain connection

The boiler has an internal trap for draining the condensate. Fit the inspection union **A** and the flexible tube **B**, pressing it in for about 3 cm. Fill the trap with approx. 0.5 L of water and connect the flexible tube to the drainage system.

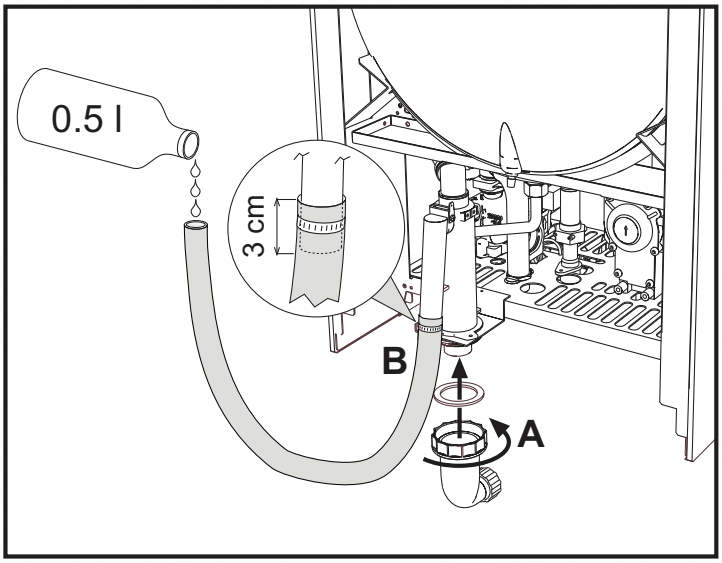

fig. 18 - Condensate drain connection

4. SERVICE AND MAINTENANCE

4.1 Adjustments

Gas conversion

The unit can operate on natural gas or LPG and is factory-set for use with one of these two gases, as clearly shown on the packing and on the dataplate. Whenever a gas different from that for which the unit is arranged has to be used, the special conversion kit will be required, proceeding as follows:

1. Replace the nozzles at the main burner, fitting the nozzles specified in the technical data table in cap. 5, according to the type of gas used
2. Modify the parameter for the type of gas:
   - put the boiler in standby mode
   - press the DHW buttons (details 1 and 2 - fig. 1) for 10 seconds: the display shows "**b01**" blinking.
   - Press the DHW buttons (details 1 and 2 - **fig. 1) to set parameter 00** (for natural gas operation) or **01** (for LPG operation).
   - press the DHW buttons (details 1 and 2 - fig. 1) for 10 seconds.
   - the boiler will return to standby mode
3. Adjust the minimum and maximum pressures at the burner (ref. relevant paragraph), setting the values given in the technical data table for the type of gas used
4. Apply the sticker contained in the conversion kit, near the dataplate as proof of the conversion.

TEST mode activation

Press the heating buttons (details 3 and 4 - fig. 1) together for 5 seconds to activate the **TEST** mode. The boiler lights at the maximum heating power set as described in the following section.

The heating and DHW symbols (fig. 19) flash on the display; the heating power will be displayed alongside.

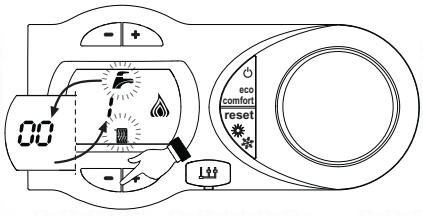

fig. 19 - TEST mode (heating power = 100%)

Press the heating buttons (details 3 and 4 - fig. 1) to increase or decrease the power (min.=0%, max.=100%).

Press the DHW button **"-"** (detail 1 - fig. 1) and boiler power is immediately adjusted to min. (0%). Press the DHW button **"+"** (detail 2 - fig. 1) and boiler power is immediately adjusted to max. (100%).

If the TEST mode is activated and enough hot water is drawn to activate the DHW mode, the boiler remains in TEST mode but the 3-way valve goes to DHW.

To deactivate the TEST mode, press the heating buttons (details 3 and 4 - fig. 1) for 5 seconds.

The TEST mode is automatically disabled in any case after 15 minutes or on stopping of hot water drawing (if enough hot water is drawn to activate the DHW mode).

Pressure adjustment at the burner

Since this unit has flame modulation, there are two fixed pressure settings: minimum and maximum, which must be those given in the technical data table according to the type of gas.

- Connect a suitable pressure gauge to the pressure point **"B"** downstream of the gas valve.
- Activate the TEST mode (see cap. 4.1).
- Press the Eco/Comfort button for 2 seconds to access the gas valve Calibration mode.
- The card goes to the setting "q02"; displaying the actually saved value, by pressing the DHW buttons .
- If the pressure gauge reading is different from the nominal maximum pressure, proceed by increases/decreases of 1 or 2 units of parameter "q02" by pressing the DHW buttons : the value is stored after each modification; wait 10 seconds for the pressure to stabilise.
- Press the heating button "-" (ref. 3 - fig. 1).
- The card goes to the setting "q01"; displaying the actually saved value, by pressing the DHW buttons .
- If the pressure gauge reading is different from the nominal minimum pressure, proceed by increases/decreases of 1 or 2 units of parameter "q01" by pressing the DHW buttons : the value is stored after each modification; wait 10 seconds for the pressure to stabilise.
- Recheck both adjustments by pressing the heating buttons and adjust them if necessary by repeating the above procedure.
- Press the Eco/Comfort button for 2 seconds to return to the TEST mode.
- Deactivate the TEST mode (see cap. 4.1).
- Disconnect the pressure gauge.

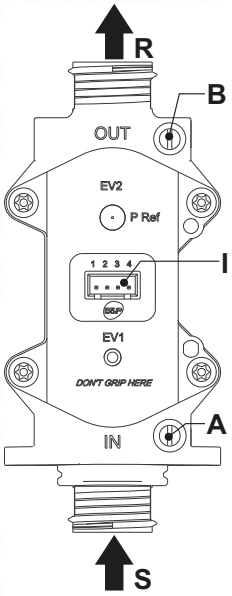

fig. 20 - Gas valve

A - Upstream pressure point
B - Downstream pressure point
I - Gas valve electrical connection
R - Gas outlet
S - Gas inlet

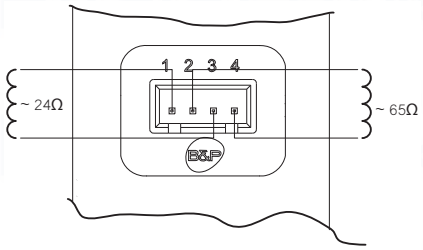

fig. 21 - Gas valve connection

TYPE SGV100
Pi max 65 mbar
24 Vdc - class B+A

Heating power adjustment

To adjust the heating power, switch the boiler to TEST mode (see sec. 4.1). Press the heating buttons (detail 3 - fig. 1) to increase or decrease the power (min. = 00 - max. = 100). Press the **reset** button within 5 seconds and the max. power will remain that just set. Exit TEST mode (see sec. 4.1).

4.2 Startup

Before lighting the boiler

- Check the seal of the gas system.
- Check correct prefilling of the expansion tank.
- Fill the water system and make sure all air contained in the boiler and the system has been vented.
- Make sure there are no water leaks in the system, DHW circuits, connections or boiler.
- Check correct connection of the electrical system and efficiency of the earthing system.
- Make sure the gas pressure for heating is that required.
- Make sure there are no flammable liquids or materials in the immediate vicinity of the boiler

Checks during operation

- Switch the unit on.
- Check the tightness of the fuel circuit and water systems.
- Check the efficiency of the flue and air/fume ducts while the boiler is working.
- Make sure the water is circulating properly between the boiler and the systems.
- Make sure the gas valve modulates correctly in the heating and domestic hot water production stages.
- Check correct boiler lighting by performing various tests, turning it on and off with the room thermostat or remote control.
- Make sure the fuel consumption indicated on the meter matches that given in the technical data table in cap. 5.
- Make sure that with no demand for heating, the burner lights correctly on opening a hot water tap. Check that in heating mode, on opening a hot water tap, the heating circulating pump stops and there is regular production of hot water.
- Make sure the parameters are programmed correctly and carry out any required customisation (compensation curve, power, temperatures, etc.).

4.3 Maintenance

Periodical check

To ensure correct operation of the unit over time, have qualified personnel carry out a yearly check, providing for the following:

- The control and safety devices (gas valve, flow meter, thermostats, etc.) must function correctly.
- The fume exhaust circuit must be perfectly efficient.
  (Sealed chamber boiler: fan, pressure switch, etc. -The sealed chamber must be tight: seals, cable glands, etc.)
  (Open chamber boiler: anti-backflow device, fume thermostat, etc.)
- The air-fume end piece and ducts must be free of obstructions and leaks
- The burner and exchanger must be clean and free of deposits. For possible cleaning do not use chemical products or wire brushes.
- The electrode must be properly positioned and free of scale.

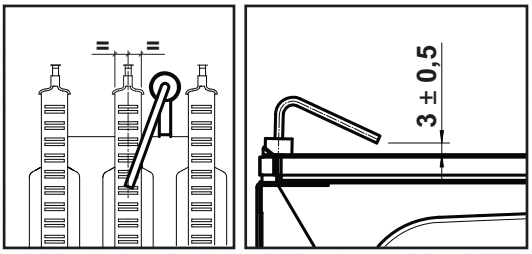

fig. 22 - Electrode positioning

- The gas and water systems must be airtight.
- The water pressure in the cold water system must be about 1 bar; otherwise, bring it to that value.
- The circulating pump must not be blocked.
- The expansion tank must be filled.
- The gas flow and pressure must correspond to that given in the respective tables.

4.4 Troubleshooting

Diagnostics

The boiler is equipped with an advanced self-diagnosis system. In case of a boiler fault, the display will flash together with the fault symbol (detail 11 - fig. 1) indicating the fault code.

There are faults that cause permanent shutdown (marked with the letter "**A**"): to restore operation, press the RESET button (detail 6 - fig. 1) for 1 second or RESET on the optional remote timer control if installed; if the boiler fails to start, it is necessary to eliminate the fault.

Faults marked with the letter "**F**" cause temporary shutdowns that are automatically reset as soon as the value returns within the boiler's normal working range.

List of faults

Table. 7

Fault code	Fault	Possible cause	Cure
A01	No burner ignition	Excessive condensate level	Empty / clean the trap
		No gas	Check the regular gas flow to the boiler and that the air has been eliminated from the pipes
		Ignition/detection electrode fault	Check the wiring of the electrode and that it is correctly positioned and free of any deposits
		Faulty gas valve	Check the gas valve and replace it if necessary
		Gas valve wiring disconnected	Check the wiring
		Ignition power too low	Adjust the ignition power
A02	Flame present signal with burner off	Electrode fault	Check the ionisation electrode wiring
		Card fault	Check the card
A03	Overtemperature protection activation	Heating sensor damaged	Check the correct positioning and operation of the heating sensor
		No water circulation in the system	Check the circulating pump
		Air in the system	Vent the system
F04	Fume thermostat fault	Exchangers dirty (clogged on water side)	Clean the exchangers
		Faulty water circulation	
		Fume thermostat contact open	Check the thermostat
		Wiring disconnected	Check the wiring
F05	Fume pressure switch fault (contact fails to close)	Wrong card parameter setting	Check the card parameter and modify it if necessary
	Fan fault	Wiring disconnected	Check the wiring
		Faulty fan	Check the fan
		Card fault	Check the card
A06	No flame after the ignition phase	Low pressure in the gas system	Check the gas pressure
		Burner minimum pressure setting	Check the pressures
F07	Card parameter fault	Wrong card parameter setting	Check the card parameter and modify it if necessary
A09	Gas valve fault	Wiring disconnected	Check the wiring
		Faulty gas valve	Check the gas valve and replace it if necessary
F10	Delivery sensor 1 fault	Sensor damaged	Check the wiring or replace the sensor
		Wiring shorted	
		Wiring disconnected	
F11	DHW sensor fault	Sensor damaged	Check the wiring or replace the sensor
		Wiring shorted	
		Wiring disconnected	
F14	Delivery sensor 2 fault	Sensor damaged	Check the wiring or replace the sensor
		Wiring shorted	
		Wiring disconnected	
A16	Gas valve fault	Wiring disconnected	Check the wiring
		Faulty gas valve	Check the gas valve and replace it if necessary
F20	Combustion control fault	Fan fault	Check the fan and fan wiring
		Wrong baffle	Check the baffle and replace it if necessary
		Flue not correctly sized or obstructed	Check the flue
A21	Poor combustion fault	Fault F20 generated 6 times in the last 10 minutes	See fault F20
A23	Set nominal system water pressure not reached within 4 minutes	Wrong card parameter setting	Check the card parameter and modify it if necessary
A24	4 fillings within 24 hours	Wrong card parameter setting	Check the card parameter and modify it if necessary
F34	Supply voltage under 180V.	Electric mains trouble	Check the electrical system
F35	Faulty mains frequency	Electric mains trouble	Check the electrical system
F37	Incorrect system water pressure	Pressure too low	Fill the system
		Water pressure switch damaged or not connected	Check the sensor
F39	External probe fault	Probe damaged or wiring shorted	Check the wiring or replace the sensor
		Probe disconnected after activating the sliding temperature	Reconnect the external probe or disable the sliding temperature
A41	Sensor positioning	Delivery sensor or DHW sensor detached from the pipe	Check the correct positioning and operation of the sensors
F42	Heating sensor fault	Sensor damaged	Replace the sensor
F43	Exchanger protection activation.	No system H_2O circulation	Check the circulating pump
		Air in the system	Vent the system
F50	Gas valve fault	Modulating Operator wiring disconnected	Check the wiring
		Faulty gas valve	Check the gas valve and replace it if necessary
A51	Poor combustion fault	Inlet/exhaust flue obstruction	Check the flue

5. TECHNICAL DATA AND CHARACTERISTICS

Table. 8 - Key of figure cap. 5

5	Sealed chamber	36	Automatic air vent
7	Gas inlet	38	Flowswitch
8	Domestic hot water outlet	42	DHW temperature sensor
9	Cold water inlet	44	Gas valve
10	System delivery	56	Expansion tank
11	System return	72	Room thermostat (not supplied)
14	Safety valve	81	Ignition and detection electrode
16	Fan	114	Water pressure switch
19	Combustion chamber	126	Contact fume thermostat
20	Burner assembly	138	External probe (not supplied)
21	Main nozzle	139	Room unit (not supplied)
22	Burner	145	Pressure gauge (water gauge)
26	Combustion chamber insulation	193	Trap
27	Copper exchanger for heating and hot water	277	Recuperator
28	Fume manifold	278	Double sensor (Safety + Heating)
32	Heating circulating pump	340	Bypass pipe

5.1 General view and main components

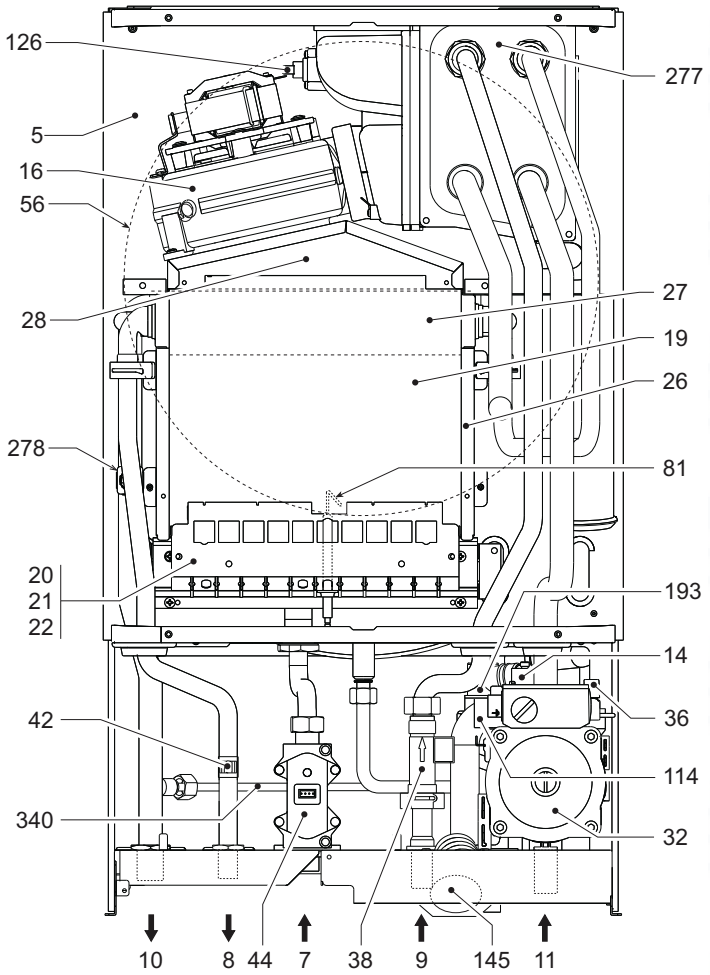

fig. 23 - General view

5.2 Water circuit

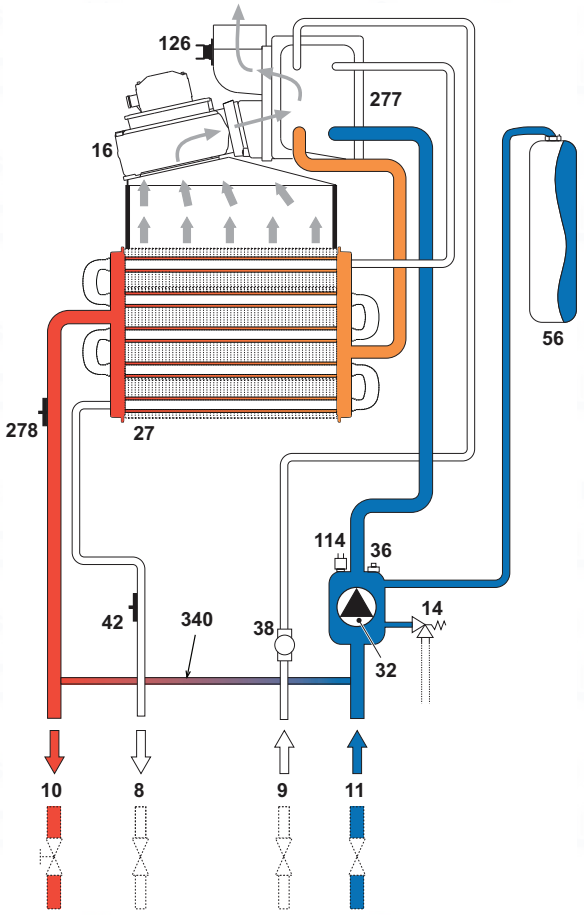

fig. 24 - Heating Circuit

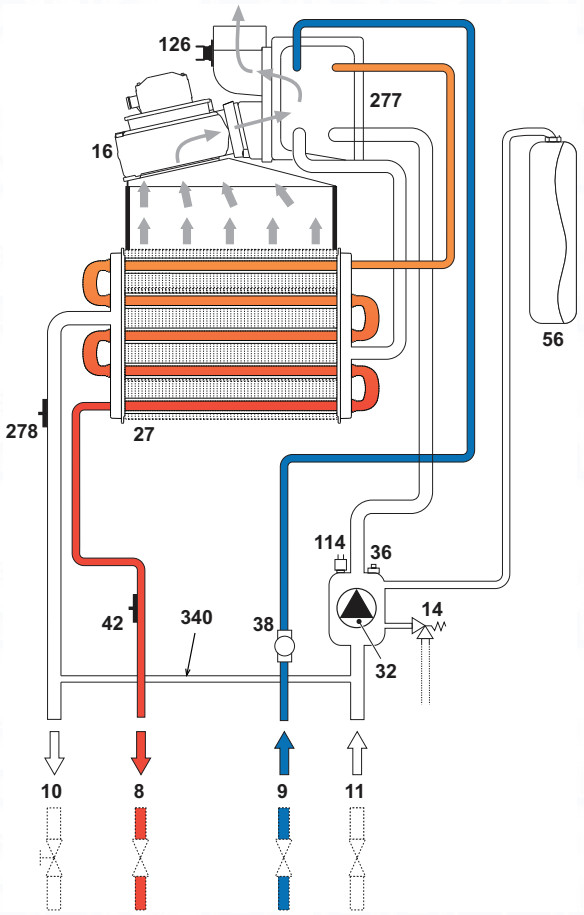

fig. 25 - DHW Circuit

5.3 Technical data table

Data	Unit	DOMIcondens HE 26 C	
Max. heating capacity	kW	25.0	(Q)
Min. heating capacity	kW	10.0	(Q)
Max. Heat Output in heating (80/60°C)	kW	24.4	(P)
Min. Heat Output in heating (80/60°C)	kW	9.5	(P)
Max. Heat Output in heating (50/30°C)	kW	26.0	
Min. Heat Output in heating (50/30°C)	kW	10.5	
Max. Heat Output in hot water production	kW	24.4	
Min. Heat Output in hot water production	kW	9.2	
Efficiency class Directive 92/42 EEC	-	★★★★	
NOx emission class	-	3	(NOx)
Burner nozzles G20	no.x Ø	11 x 1.35	
Gas supply pressure G20	mbar	20.0	
Max. gas pressure at burner (G20)	mbar	11.0	
Min. gas pressure at burner (G20)	mbar	2	
Max. gas delivery G20	m^3/h	2.64	
Min. gas delivery G20	m^3/h	1.06	
Burner nozzles G31	no.x Ø	11 x 0.79	
Gas supply pressure G31	mbar	37	
Max. gas pressure at burner (G31)	mbar	35.0	
Min. gas pressure at burner (G31)	mbar	5.0	
Max. gas delivery G31	kg/h	1.96	
Min. gas delivery G31	kg/h	0.78	
Max. working pressure in heating	bar	3	(PMS)
Min. working pressure in heating	bar	0.8	
Max. heating temperature	°C	90	(tmax)
Heating water content	litres	1.5	
Heating expansion tank capacity	litres	8	
Heating expansion tank prefilling pressure	bar	1	
Max. working pressure in hot water production	bar	9	(PMW)
Min. working pressure in hot water production	bar	0.25	
DHW flowrate Δt 25°C	l/min	14	
DHW flowrate Δt 30°C	l/min	11.6	(D)
DHW flowrate Δt 35°C	l/min	10	
Protection rating	IP	X5D	
Power supply voltage	V/Hz	230V/50Hz	
Electrical power input	W	135	
Electrical power input in hot water production	W	135	
Empty weight	kg	35	
Type of unit		C_{12}-C_{22}-C_{32}-C_{42}-C_{52}-C_{62}-C_{72}-C_{82} B_{22}-B_{32}	
PIN CE		0461BU0942	
G.C.	no.	--	

5.4 Diagrams

Pressure - power diagramsProdotto_24

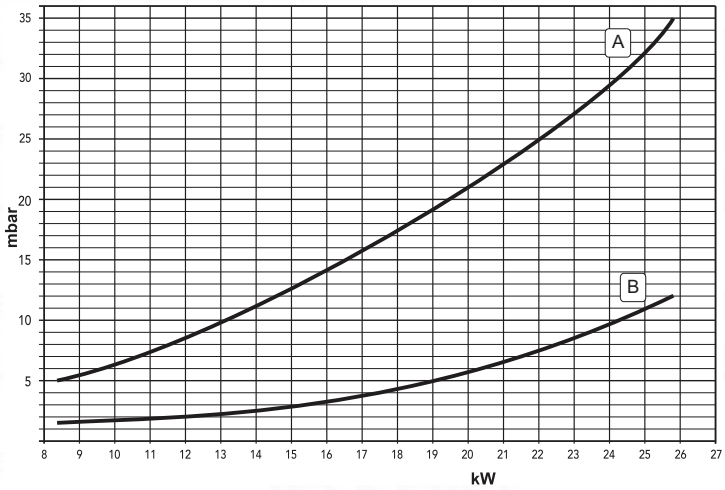

A = LPG - **B =** NATURAL GAS

Circulating pump head / pressure lossesProdotto_24

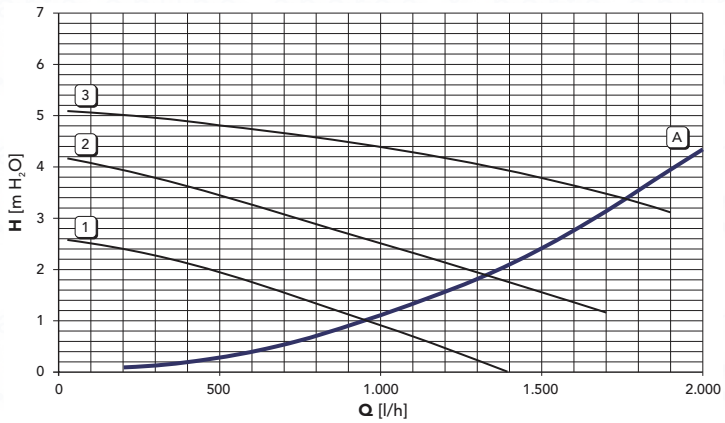

A = Boiler pressure losses - **1, 2 and 3 =** Circulating pump speed

5.5 Wiring diagram

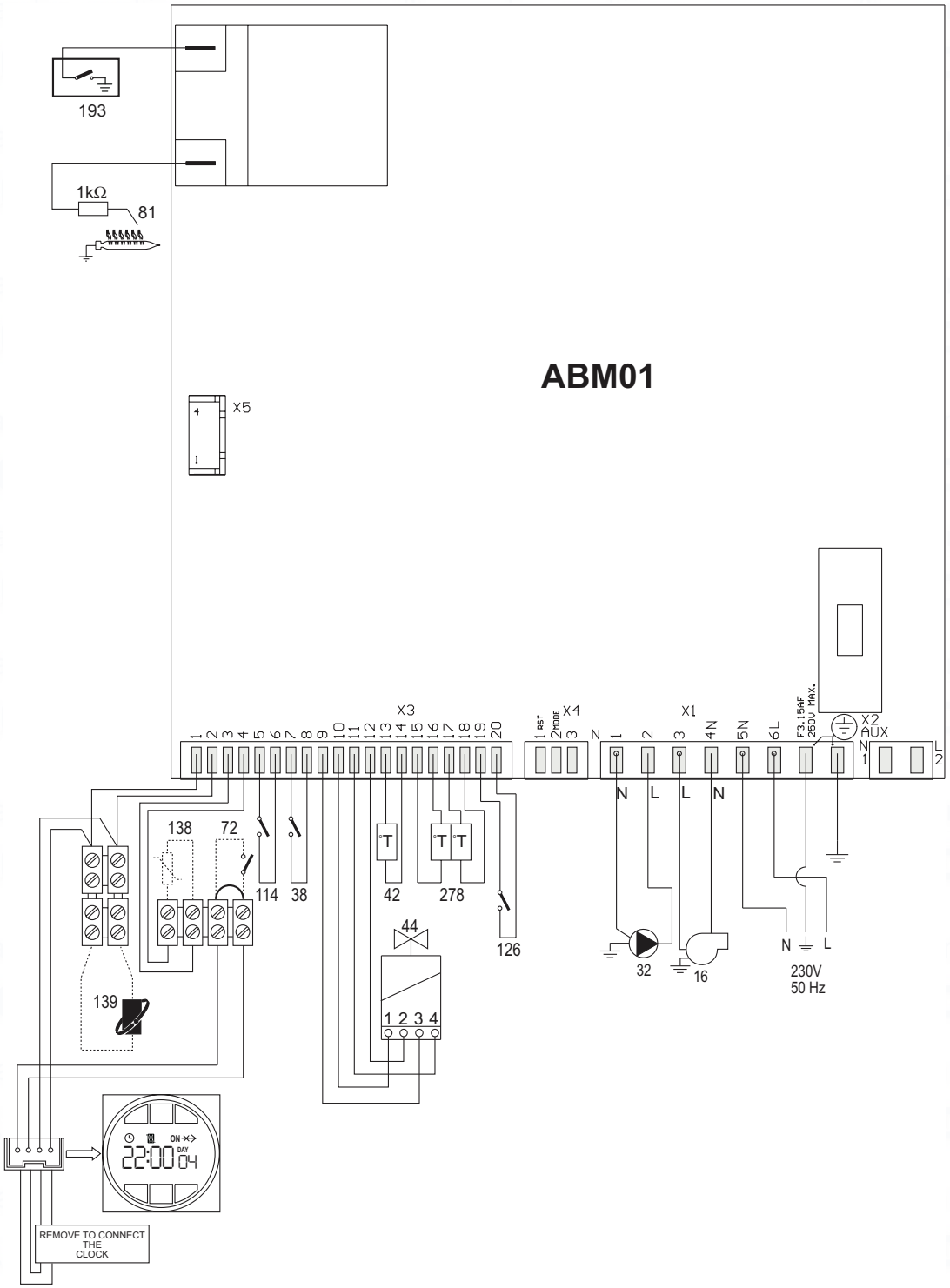

fig. 26 - Electrical circuit

spares & parts online
IBASIS.CO.UK®

GAS BOILER SYSTEM COMMISSIONING CHECKLIST

This Commissioning Checklist is to be completed in full by the competent person who commissioned the boiler as a means of demonstrating compliance with the appropriate Building Regulations and then handed to the customer to keep for future reference.

Failure to install and commission according to the manufacturer's instructions and complete this Benchmark Commissioning Checklist will invalidate the warranty. This does not affect the customer's statutory rights.

Customer Name _____ Telephone Number _____

Address _____

Boiler Make and Model _____

Boiler Serial Number

Commissioned by *(print name)* _____ Gas Safe Register Number _____

Company Name _____ Telephone Number _____

Company Address _____

_____ Commissioning Date _____

To be completed by the customer on receipt of a Building Regulations Compliance Certificate*:

Building Regulations Notification Number *(if applicable)*

CONTROLS Tick the appropriate boxes

Time and Temperature Control to Heating	Room Thermostat and Programmer/Timer ☐	Programmable Room Thermostat ☐	Load/Weather Compensation ☐	Optimum Start Control ☐
Time and Temperature Control to Hot Water			Cylinder Thermostat and Programmer/Timer ☐	Combination Boiler ☐
Heating Zone Valves			Fitted ☐	Not Required ☐
Hot Water Zone Valves			Fitted ☐	Not Required ☐
Thermostatic Radiator Valves			Fitted ☐	Not Required ☐
Automatic Bypass to System			Fitted ☐	Not Required ☐
Boiler Interlock				Provided ☐

ALL SYSTEMS

The system has been flushed and cleaned in accordance with BS7593 and boiler manufacturer's instructions Yes ☐

What system cleaner was used?

What inhibitor was used? Quantity _____ *litres*

CENTRAL HEATING MODE Measure and Record:

Gas Rate	_____ m^3/hr	OR		_____ ft^3/hr
Burner Operating Pressure (if applicable)	_____ mbar	OR	Gas Inlet Pressure	_____ mbar
Central Heating Flow Temperature				_____ °C
Central Heating Return Temperature				_____ °C

COMBINATION BOILERS ONLY

Is the installation in a hard water area (above 200ppm)? Yes ☐ No ☐

If yes, and if required by the manufacturer, has a water scale reducer been fitted? Yes ☐ No ☐

What type of scale reducer has been fitted?

DOMESTIC HOT WATER MODE Measure and Record:

Gas Rate	_____ m^3/hr	OR		_____ ft^3/hr
Burner Operating Pressure (at maximum rate)	_____ mbar	OR	Gas Inlet Pressure (at maximum rate)	_____ mbar
Cold Water Inlet Temperature				_____ °C
Hot water has been checked at all outlets			Yes ☐	Temperature _____ °C
Water Flow Rate				_____ *l/min*

CONDENSING BOILERS ONLY

The condensate drain has been installed in accordance with the manufacturer's instructions and/or BS5546/BS6798 Yes ☐

If the condensate pipe terminates externally has the pipe diameter been increased and weatherproof insulation fitted? Yes ☐

ALL INSTALLATIONS

If required by the manufacturer, record the following CO_2 _____ % OR CO _____ *ppm* OR CO/CO_2 Ratio _____

The heating and hot water system complies with the appropriate Building Regulations Yes ☐

The boiler and associated products have been installed and commissioned in accordance with the manufacturer's instructions Yes ☐

The operation of the boiler and system controls have been demonstrated to and understood by the customer Yes ☐

The manufacturer's literature, including Benchmark Checklist and Service Record, has been explained and left with the customer Yes ☐

Commissioning Engineer's Signature

Customer's Signature

(To confirm satisfactory demonstration and receipt of manufacturer's literature)

*All installations in England and Wales must be notified to Local Authority Building Control (LABC) either directly or through a Competent Persons Scheme. A Building Regulations Compliance Certificate will then be issued to the customer.

benchmark COLLECTIVE MARK
THE MARK OF QUALITY FOR THE INSTALLATION, COMMISSIONING AND SERVICING OF DOMESTIC HEATING AND HOT WATER SYSTEMS

©Heating and Hotwater Industry Council (HHIC)

Service Record

It is recommended that your heating system is serviced regularly and that the appropriate Service Interval Record is completed.

Service Provider
Before completing the appropriate Service Record below, please ensure you have carried out the service as described in the manufacturer's instructions.

Always use the manufacturer's specified spare part when replacing controls.

Service 1 Date:
Engineer Name:
Company Name:
Telephone No.
Gas Safe Register No.
Comments:
Signature:

Service 2 Date:
Engineer Name:
Company Name:
Telephone No.
Gas Safe Register No.
Comments:
Signature:

Service 3 Date:
Engineer Name:
Company Name:
Telephone No.
Gas Safe Register No.
Comments:
Signature:

Service 4 Date:
Engineer Name:
Company Name:
Telephone No.
Gas Safe Register No.
Comments:
Signature:

Service 5 Date:
Engineer Name:
Company Name:
Telephone No.
Gas Safe Register No.
Comments:
Signature:

Service 6 Date:
Engineer Name:
Company Name:
Telephone No.
Operative ID No.
Comments:
Signature:

Service 7 Date:
Engineer Name:
Company Name:
Telephone No.
Gas Safe Register No.
Comments:
Signature:

Service 8 Date:
Engineer Name:
Company Name:
Telephone No.
Gas Safe Register No.
Comments:
Signature:

Service 9 Date:
Engineer Name:
Company Name:
Telephone No.
Gas Safe Register No.
Comments:
Signature:

Service 10 Date:
Engineer Name:
Company Name:
Telephone No.
Gas Safe Register No.
Comments:
Signature:

Before contacting Ferroli please have available the completed BENCHMARK document (located in the back of this manual), boiler serial number and model detail.

For Technical assistance during the installation, call our
Technical Helpline on 0843 479 0479.
You will be required to provide your Gas Safe Register Number.

Should you require a Service Engineer to visit, call our
Service Centre on 0843 479 0479.

Calls to these numbers are charged at National Rate from BT landlines.
Calls made from mobile networks may be considerable more.

Phone numbers:

Installer _____

Service Engineer _____

BECAUSE OF OUR CONSTANT ENDEAVOUR FOR IMPROVEMENT DETAILS MAY VARY SLIGHTLY FROM THOSE QUOTED IN THESE INSTRUCTIONS.

Ferroli

ALL SPECIFICATIONS SUBJECT TO CHANGE

Please note - to avoid incurring unnecessary expense, in the event of a boiler shut down, check this is not caused by lack of electricity supply, gas supply or low water pressure before calling our Customer Service Helpline.

spares & parts online IBASIS.CO.UK