Ferroli

GRUPPO FERROLI

ECONCEPT 50 A

caldaia murale a gas premiscelata a condensazione
wall-hung, pre-mix gas-fired condensing boiler
caldera mural de gas con premezcla y condensación
caldeira mural a gás, pré-misturada a condensação
Duvar tipi, gazlı, yoğunlaşma tahliyeli ısıtıcı kombi

ISO 9001 : 2000
CERTIFIED COMPANY
TÜV CERT
DIN EN ISO 9001

Appr. nr. B99.15 A - CE 0063 BL 3475

CE

ISTRUZIONI PER L'USO, L'INSTALLAZIONE E LA MANUTENZIONE
INSTALLATION AND OPERATING INSTRUCTIONS
INSTRUCCIONES PARA LA INSTALACIÓN Y EL FUNCIONAMIENTO
INSTRUÇÕES DE INSTALAÇÃO E FUNCIONAMENTO
KULLANMA, KURULUM VE BAKIM TALİMATLARI

cod. 3540A66/1 - 04/2005

IMPORTANT

Your "benchmark" Installation, Commissioning and Service Record Log Book is enclosed in the last pages of this manual. "This record must be completed and left with the end user".

Ferroli is a member of the Benchmark initiative and fully supports the aims of the programme. Benchmark has been introduced to improve the standards of installation and commissioning of central heating systems in the UK and to encourage the regular servicing of all central heating systems to ensure safety and efficiency.
Please see installation and servicing guidlines.

CE MARK
CE mark documents that the Ferroli gas appliances comply with the requirement contained in European directives applicable to them.
In particular, the appliances comply with the following CEE directives and the technical specifications provided from them:
- Gas appliances directive 90/396
- Efficiencies directive 92/42
- Low tension directive 73/23 (modified from the 93/68)
- Electromagnetic compatibility directive 89/396 (modified from the 93/68)

INSTRUCTIONS AND REGULATIONS
Assembly, installation, first start up and maintenance must be carried out by competent persons only, in accordance with all current technical regulations and directives.

c.o.s.h.h.
Materials used in the manufacture of this appliance are non hazardous and no special precautions are required when servicing.

Related Documents

This appliance must be installed strictly in accordance with these instructions.
The Gas Safety Regulations (Installations & Use) 1996.
The Local Building Regulations.
The Building Regulations.
The Buildings Standards (Scotland - Consolidated) Regulations.

British Standards Codes of Practice:

B.S.	7593	1992	TREATMENT OF WATER IN DOMESTIC HOT WATER CENTRAL HEATING SYSTEMS
B.S.	5546	1990	INSTALLATION OF HOT WATER SUPPLIES FOR DOMESTIC PURPOSES
B.S.	5440	Part 1 2000	FLUES
B.S.	5440	Part 2 1989	AIR SUPPLY
B.S.	5449	1990	FORCED CIRCULATION HOT WATER SYSTEMS
B.S.	6798	1987	INSTALLATION OF GAS FIRED HOT WATER BOILERS
B.S.	6891	1989	GAS INSTALLATIONS
B.S.	7671	1992	IEE WIRING REGULATIONS
B.S.	4814	1990	SPECIFICATION FOR EXPANSION VESSELS
B.S.	5482	1994	INSTALLATION OF LPG

Model Water Bye Laws

For Northern Ireland the rules in force apply

- Read the warnings given in this manual thoroughly. They provide important information for safe installation, use and maintenance
- Keep the manual safe for future consultation.
- The instruction manual is an integral and essential part of the product and must be kept by the user.
- If the appliance is sold or transferred to another owner or if the owner moves, leaving the appliance behind, always ensure that the manual is kept with the appliance for consultation by the new owner and /or installer.
- Incorrect installation or poor maintenance absolves the manufacturer from all liability for damage to persons or property.
- Installation and maintenance must be carried out and conform with current legislation, according to the manufacturer's instructions and by qualified personnel.
- Before cleaning or maintenance, disconnect the appliance from the mains via the switch on the appliance or a suitable isolating device.
- In the event of malfunction or faulty operation, isolate the appliance. Do not attempt to repair or carry out any other operation on the appliance directly. Contact qualified personnel only.
- Repairs or the replacement of components must be carried out exclusively by qualified personnel using original spare parts only. Failure to respect the above my compromise the safety of the appliance.
- To guarantee efficient operation, the appliance must be serviced once a year by an authorised service centre.
- The appliance may not be used for purposes other than those for which it was explicitly designed. Any other use is considered improper and therefore dangerous.
- Incorrect installation and use or failure to follow the instructions provided by the manufacturer absolve the manufacturer from all liability for damage.
- After unpacking, check that the contents are complete and undamaged.
- Keep packing out of reach of children as it may be potentially hazardous.
- To clean external parts, use a damp cloth moistened with soapy water if necessary. Avoid using abrasive cleaning products and solvents.

1. Characteristics and technical data 37
1.1 Introduction 37
1.2 Boiler control panel 37
1.3 Ignition and Shut-down 38
1.4 Regulations 39
1.5 Maintenance 40
1.6 Fault codes 40

2. Installation 41
2.1 General Instructions 41
2.2 Positioning and wall mounting 41
2.3 Connection to the hydraulic system 42
2.4 Connection to the gas system 44
2.5 Electrical connections 45
2.6 Flues 48
2.7 Condensation discharge connection 53
2.8 Modular installation 54

3. Service and maintenance 56
3.1 Settings 56
3.2 Commissioning and testing 57
3.3 Maintenance 59
3.4 Troubleshooting 60

4. Technical characteristics and data 62
4.1 Dimensions and connections 62
4.2 General view and main components 63
4.3 Technical data table 64
4.4 Diagrams 65
4.5 Wiring diagrams 66

Benchmark 68

1. CHARACTERISTICS AND TECHNICAL DATA

1.1 Introduction

Dear Customer,

Thank you for having chosen the **Econcept 50 A**, the latest generation of FERROLI wall-hung boiler, featuring advanced design and cutting-edge technology.

The **Econcept 50 A** is a pre-mix condensing thermal generator for heating , with very high thermal efficiency and very low emissions, fired by natural gas or LPG.

The boiler can be connected with external DHW storage.

The boiler control and regulation system is microprocessor-based, with advanced self-diagnostics. The user interface, made up of a keypad and display, is user-friendly, and shows the operating status of the appliance at all times. (The operating parameters and the data logs are saved internally and can be called up using the Personal Computer interface to simplify Service operations).

The heat output is regulated continuously across the entire operating range (also with DHW storage), with temperature-scrolling climate control, which automatically adapts the operating mode to the characteristics of the internal and external environment, of the building and its location, using external and internal sensors (optional extra).

1.2 Boiler control panel

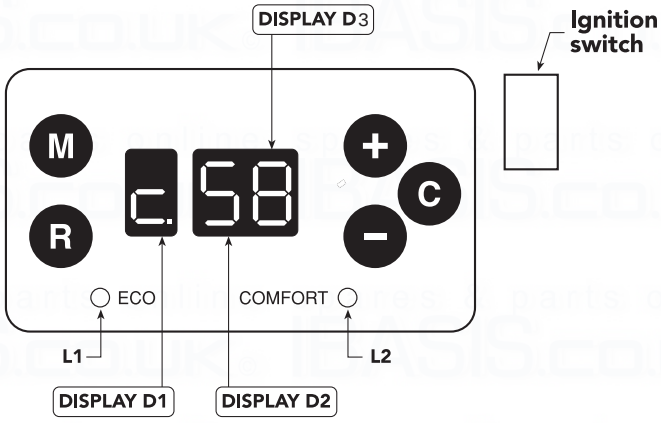

fig. 1

Function of the buttons

M	**MODE** button	- Use this button to scroll the parameters.
R	**RESET** button	- Use this button to reset the operation of the boiler in the event of shut-down.
+ / −	**MODIFY** button	- Use these buttons to modify the regulation values.
C	**CONFIRM** button	- Use this button to enable the set regulation value.

Display indications

D1	**MODE** display	- Indicates the operating mode of the boiler or the selected parameter.
D2 / D3	**DATA** display	- Indicates value of the parameters
○	Led **L1**	- Indicates: Economy Operation
○	Led **L2**	- Indicates: Comfort Operation

Operating indications on the display

During operation, without pressing any of the buttons the display shows the operating status of the appliance:

Operating mode	Display "D1"	Display "D2/D3"
Standby	o	Central heating outlet temperature
Heating	c	Central heating outlet temperature
Domestic hot water	b	Domestic hot water temperature
Standby following domestic hot water op.	P	Domestic hot water temperature
Standby following heating op.	q	Central heating outlet temperature
Waiting for DHW production	d	Domestic hot water temperature

Note: when the burner fires a small. Will appear in display D1 after the letter.

Accessing the operating menu

Pressing the "M - mode" button once accesses the operating menu. Pressing the "M - mode" button again displays the following parameters and information in sequence:

DISPLAY D1	DISPLAY D2/D3
0 11	Summer/Winter Selection (00 = Summer - 11 = Winter)
0 -|-	Economy/Comfort Selection (0 = Economy - 1 = Comfort)
1 -|-	CH outlet temperature view and setting
2 -|-	Display and setting DHW storage temperature
3 -|-	Display system return temperature
4 -|-	External temperature
5 -|-	Flue gas temperature
6 -|-	-
7 -|-	-
8 -|-	Boiler power
9 -|-	Compensation curve setting
9 -|-	-

1.3 Ignition and Shut-down

Ignition

Check that any shut-off valves in the heating system and domestic hot water circuit outside of the boiler are open. Open the gas control upstream from boiler and press the main switch. The boiler will perform a self-test cycle lasting approximately one minute, at the end of which it is ready for operation. The ignition and shut-down of the burner assembly are completely automatic operations, which depend on the requirements of the heating system or domestic hot water circuit (display should read "FHI" during test).

Shut-down

In the event of extended periods of inactivity close the gas control upstream from the boiler and disconnect the electrical power supply to the appliance. In this case, the boiler antifreeze protection function is also disabled; this function switches on the burner assembly when the heating system temperature falls below 5°C.

⚠ For extended periods of inactivity during the winter months, in order to avoid damage due to freezing, all the water should be drained from the boiler, both the domestic hot water and the heating system; alternatively, drain only the domestic hot water and introduce antifreeze into the heating system.

For short periods of inactiviti leave the power and gas turned on, the frost protection will activate if the appliance falls below 5°C, however, this will only protect the appliance. For system protection internal and external frost stat.

1.4 Regulations

Setting the heating system temperature

Set, using the room thermostat or remote control, the desired temperature inside the rooms. When acting on the room thermostat, the boiler is turned on and the heating system water is brought to the central heating outlet set temperature or calculated temperature (with temperature scrolling active). On reaching the required temperature inside the rooms, the boiler will switch off.

If no room thermostat or remote control is installed, the boiler will maintain the heating system temperature at the central heating outlet setpoint.

To set the central heating outlet temperature, access the operating menu, and using the button (M) display parameter 1 – central heating outlet temperature. On pressing one of the buttons (+)/(−) the display will start to flash, showing the outlet temperature setpoint. Use the buttons (+)/(−) to set the required value. To activate the new value, press the button (C). To cancel the setting, do not press the button (C), and press the button (M).

Outside temperature compensation

When the (optional) external probe is installed, the boiler regulation system functions in "Outside temperature compensation" mode. In this mode, the temperature of the heating system is regulated according to the external climatic conditions, so as to guarantee a high degree of comfort and energy saving all year round. Specifically, when the external temperature falls, the central heating outlet temperature is increased, according to a pre-determined "compensation curve".

In this mode, the temperature set in parameter 1 of the operating menu becomes the maximum central heating outlet temperature. This should be set to Maximum to allow the system to regulate over the entire working range.

The boiler must be set during installation by qualified personnel. Other minor modifications can be made by the user to improve the level of comfort: the compensation curve can in fact be modified by accessing the operating menu with the button (M) and scrolling the menu, again using the button, to parameter 9.

The set compensation curve is displayed (refer to graph below). Pressing one of the buttons (+)/(−) the display starts to flash; use the buttons (+)/(−) to set the required value. To activate the new curve, press the button (C). To cancel the setting, do not press the (C) button, and press the button (M).

If the ambient temperature is lower than the required value, it is suggested to set a higher curve, and vice-versa. Proceed with single unit increments or decreases, and check the results in the room.

Compensation curve

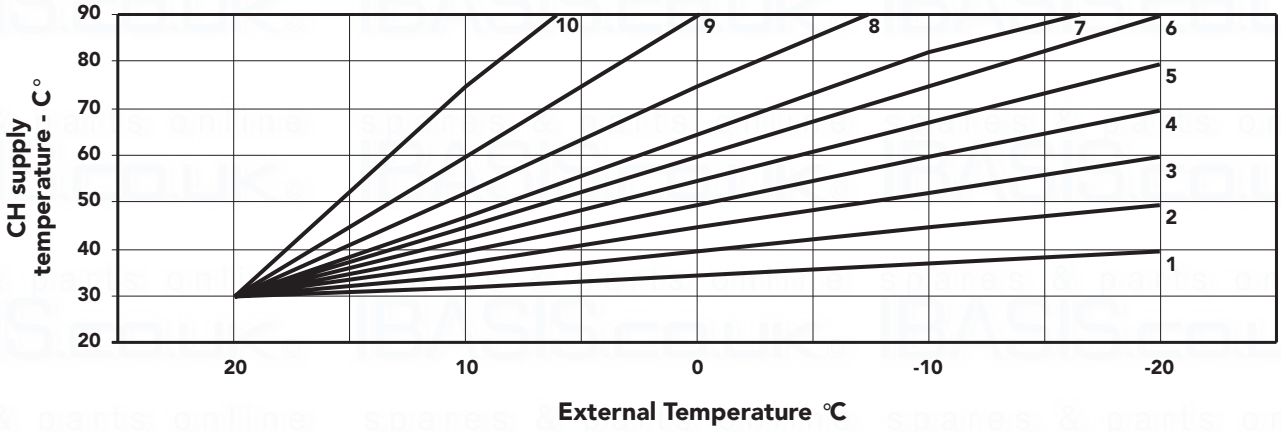

1.5 Maintenance

This appliance must be serviced anually by an approved corgi engineer.

The casing, the control panel and the aesthetic parts of the boiler can be cleaned using a soft and damp cloth. Do not use abrasives or solvents.

1.6 Fault codes

In the event of operating problems, the display flashes and shows the code identifying the fault code.

The display D1 is marked by the letter **"F"** and will temporary shut-down, this will reset automatically as soon as the value returns within the boiler's normal operating range.

The display marked by the letter **"A"** causes a shut-down of the boiler which can be reset by the user. To reset operation, press the (R) (reset) button.

If the problem persists, or for diagnosis if the fault codes (page 26), please refer to the "troubleshooting" chapter in this manual for more details.

2. INSTALLATION

2.1 General Instructions

Gas Safety (Installation & Use) Regulations: 1996

In the interest of safety, **it is the law** that all gas appliances are installed by a competent person in accordance with the above Regulations, Building Regulations/Building Standards Scotland, Codes of Practice, current I.E.E. Regulations and the byelaws of the Local Water Undertaking. Failure to comply with the Regulations may lead to prosecution; it is your responsibility to ensure that the law is complied with.

N.B. For Northern Ireland the rules in force apply.

IMPORTANT: If the boiler is to be fitted in a timber framed building it should be fitted in accordance with the Institute of Gas Engineers document IGE/UP/7. If in doubt advice should be sought from the Local Supplier.

2.2 Positioning and wall mounting

The place of installation must be free of flammable objects or materials, corrosive gas, dust or volatile substances. The environment must be dry and not exposed to rain, snow or frost.

The installation of the **ECONCEPT** must be on a suitable non-combustible load bearing wall which will provide an adequate fixing for the boiler mounting bracket assembly. The location should be in an area where the water pipes will not be subjected to frost conditions. In siting the boiler the following limitations **must** be observed.

The boiler may be installed in any room or internal space, although particular attention is drawn to the requirements of the current I.E.E. wiring regulations and in Scotland the electrical provisions of the building regulations applicable in Scotland, with respect to the installation of the boiler in a room or internal space containing a bath or shower.

Where a room sealed appliance is installed in a room containing a bath or shower any electrical switch or appliance control utilising mains electricity must be situated so that it cannot be touched by a person using the bath or shower.

The boiler is supplied ready for wall-hung installation. The rear frame of the appliance has a series of slots for fastening it to the wall, using screws with metal wall plugs. The fastening to the wall must provide stable and effective support of the appliance.

If the appliance is enclosed in a cabinet or alongside another appliance, space must be allowed for normal maintenance operations. Fig. 2 shows the minimum and recommended space to be left free around the appliance.

WARNING!! This appliance must be installed in a room with sufficient ventilation, to avoid dangerous conditions arising in the event of, even minor, gas leaks. These safety standards are imposed by the EEC Directive no. 09/396 for all gas appliances, including the so-called sealed appliances.

For further instruction concerning devices installation in cascade, please refer to the related paragraph.

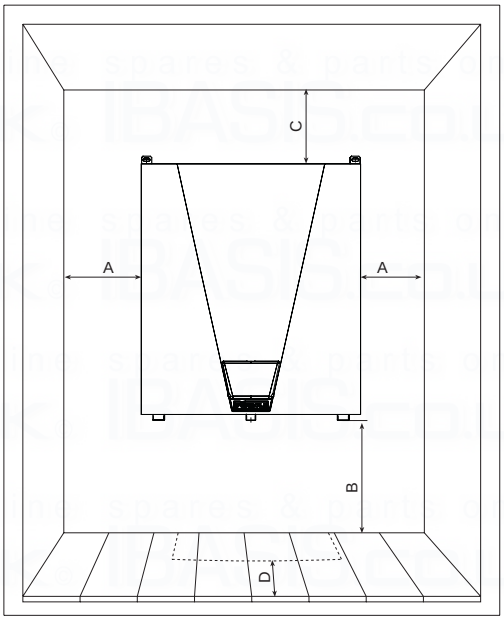

Fig. 2

	Minimum	Recommended
A	5 cm	15 cm
B	5 cm	30 cm
C	15 cm	20 cm
D	1,5 cm (from any openable panel)	> 50 cm

2.3 Connection to the hydraulic system

Make the connections to the corresponding couplings, according to the positions indicated in Fig. 3.

The discharge of the safety valve must be connected to a funnel or collection pipe, to discarge against a wall approx 300mm from ground level.

Make the connections to the boiler so as its internal pipes are not subject to stress.

Note: Caution must be taken to ensure the discarge pipe cannot cause damage to persons en property in the event of discharge.

⚠ The appliance is not supplied with an expansion vessel, and therefore such device must be connected by the installer. Please note that the pressure in the system, when cold, must be between 0.5 and 1 bar.

⚠ In addition, a filter must be installed on the system return piping to prevent debris or fungi from the system clogging and damaging the heat generators.
The filter must definitely be installed when replacing generators in existing systems. The manufacturer shall not be held liable for any damage caused to the generator by failure to install or inadequate installation of this filter.

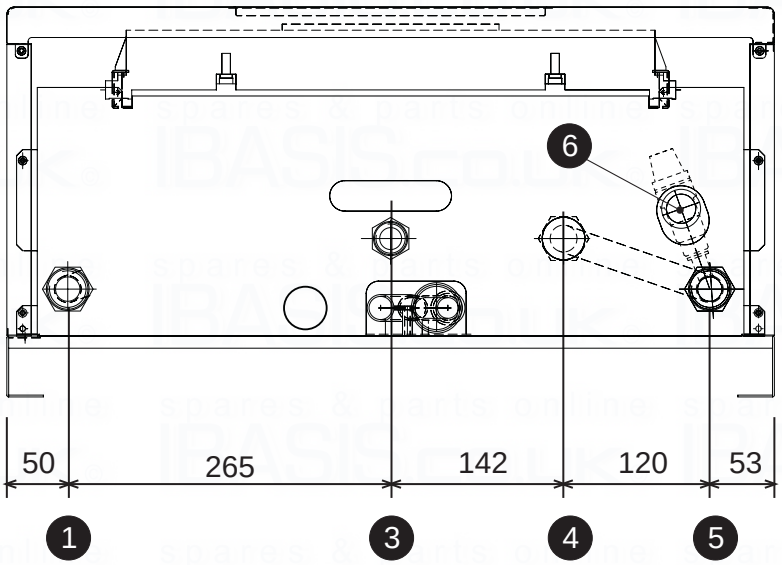

Fig. 3

1 CH flow
3 Gas inlet
4 DHW return
5 CH return
6 Safety valve

Water treatment

If water treatment is used Ferroli Limited recommend only the use of Fernox or Sentinel water treatment products, which must be used in accordance with the manufacturers instructions. For further information contact:

Feronx Manufacturing Co. LTD.
Tandern house, Marlowe way
Croydon, surrey, CRO 4YS
Tel: 0870 5601 5000

Sentinel Division
Betz Dearborn LTD
Widnes, Cheshire WA8 8ND
Tel: 0151 424 5351

Note:

- If the boiler is installed in an existing system any unsuitable additives must be removed by thorough cleasing. All systems should be cleansed according to B.S. 7593.
- In hard water areas treatment to prevent lime scale may be necessary.
- It is important that the correct concentration of the water treatment product is maintained in accordance with the manufacturers instructions.

Water System

Note The boiler is designed for sealed systems only and must NOT be used on open vented systems.

Central Heating

Detailed recommendations are given in BS6798, BS5449, BS6700 and CP342 Part 2. Pipework not forming part of the useful heating surface should be insulated to prevent any heat losses or possible freezing (i.e. in roof spaces or ventilated underfloor spaces). Drain taps should be positioned at the lowest point of the system in accessible locations to permit the whole system to be drained down. The drain taps should be in accordance with BS2879. Copper tubing to BS2871, Part 1 is recommended for water carrying pipework. Pipework in horizontal runs should have a gradient where possible to facilitate the removal of air. Ensure that the boiler heat exchanger is not a natural point for air collection.

Make Up Water

Provision must be made for replacing water lost from the sealed system. Reference should be made to BS6798, for methods of filling and making up sealed systems. There must be no direct connection between the boiler's central heating system and the mains water supply. The use of mains water to charge and pressurise the system directly, is conditional upon the Local Water Byelaws. Again any such connection must be disconnected after use.

Always connect and filling device to the return pipework

DHW calorifier connection(Optional kit 042013X0)

The optional kit 042013X0 is available for connection with an external cylinder. The kit, which includes circulator, cylinder feeler and hydraulic pipe fittings, has to be mounted inside the cylinder, according with instruction contained in the kit itself. Then the connections have to be joined to the cylinder.

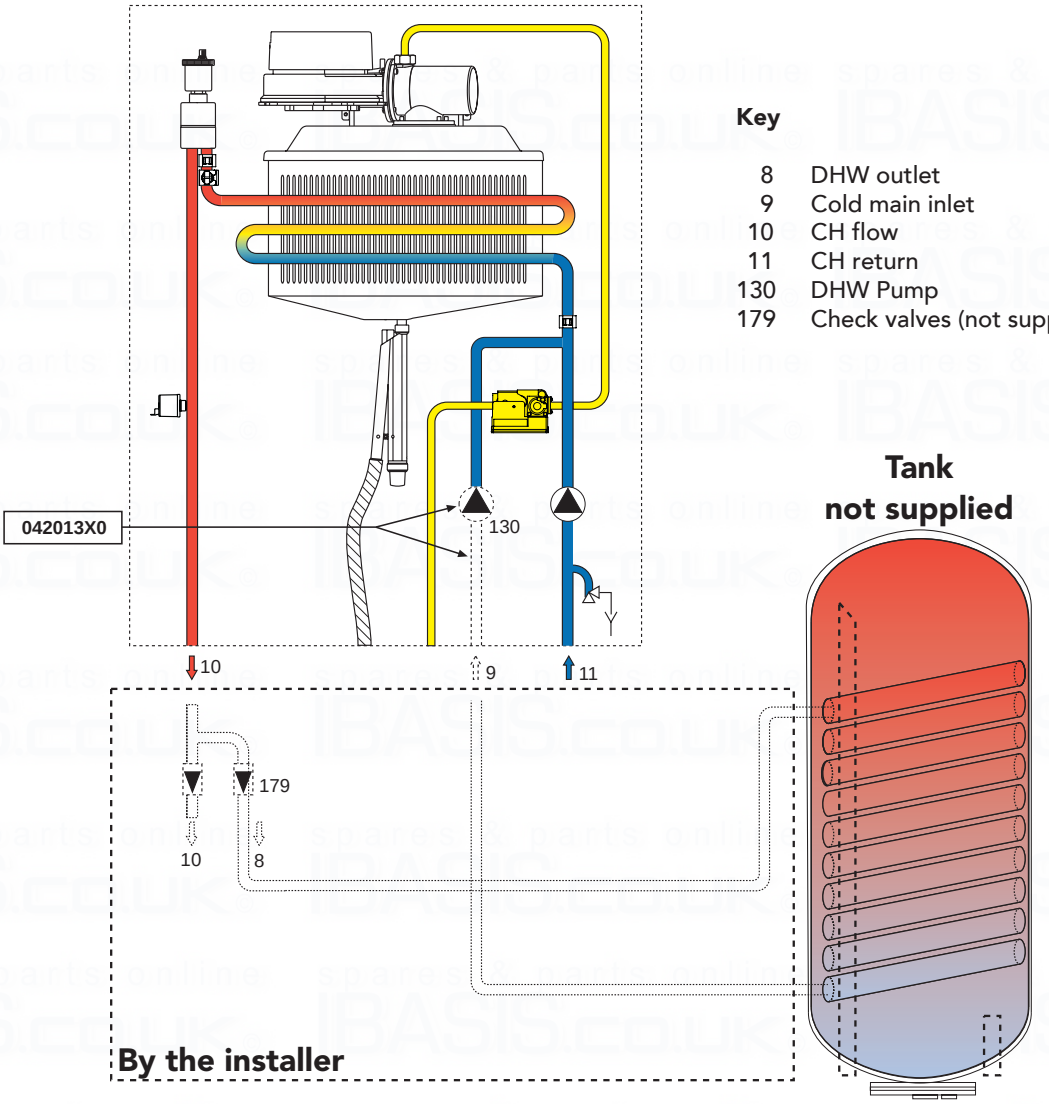

Fig. 4

2.4 Connection to the gas system

If necessary the local Gas supplier should be consulted, at the installation planning stage, in order to establish the availability of an adequate supply of gas.

An existing service pipe must **not** be used without prior consultation with the Local Gas supplier.

A gas meter can only be connected by the Local Gas supplier, or by a Local Gas suppliers Contractor.

Installation pipes should be fitted in accordance with BS6891.

Appliance inlet working pressure must be 20mbar MINIMUM, for NG and 37 mbar minimum for LPG.

Pipework from the meter to the boiler must be of an adequate size.

Do not use pipes of a smaller size than the boiler inlet gas connection.

The complete installation must be tested for gas soundness and purged as described in BS6981. All pipework must be adequately supported. An isolating gas valve should be fitted on the boiler gas inlet. Please wait 10 minutes when lighting from cold before checking gas rate. Gas pressures should be checked after the boiler has operated for 10 minutes to ensure thermal equilibrium.

2.5 Electrical connections

Connection to the electrical grid

The boiler must be connected to a single-phase, 230 Volt-50 Hz electric line.

The unit's electrical safety is only guaranteed when correctly connected to an efficient earthing system executed according to current safety standards. Have the efficiency and suitability of the earthing system checked by professionally qualified personnel. The manufacturer is not responsible for any damage caused by failure to earth the system. Also make sure that the electrical system is adequate for the maximum power absorbed by the unit, as specified on the boiler dataplate, in particular ensuring that the section of the system's cables is suitable for the power absorbed by the unit.

The boiler is prewired and provided with a cable for connection to the electricity line. The connections to the grid must be made with a permanent connection and equipped with a bipolar switch whose contacts have a minimum opening of at least 3 mm, interposing fuses of max. 3A between the boiler and the line. It is important to respect the polarities (LINE: brown wire / NEUTRAL: blue wire / EARTH: yellow-green wire) in making connections to the electrical line.

The boilers are comprehensive of a special Y-type power cable. If the cable gets damaged, switch off the unit and have it changed by a Ferroli authorized Service Centre. If changing the electric power cable, use solely "HAR H05 VV-F" 3x0.75 mm2 cable with a maximum outside diameter of 8 mm.

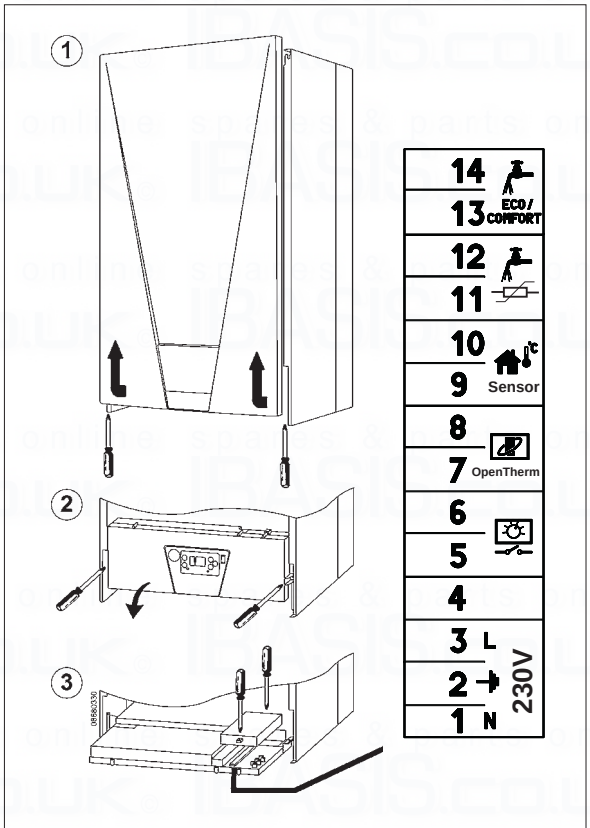

Fig. 5

Room thermostat, external unit and auxiliary controls

Below the electrical control box is a multipolar terminal block, for connecting:

- Room thermostat (5-6)
  WARNING: THE ROOM THERMOSTAT MUST NOT HAVE LIVE CONTACTS. CONNECTING 230V TO TERMINALS WILL CAUSE IRREVERSIBLE DAMAGE TO THE ELECTRONIC BOARD.
  When connecting a room thermostat with daily or weekly program, or a timer, avoid taking the power supply to these devices from their switch contacts. Their power supply must derive from a direct connection to the mains or using batteries, depending on the type of device.
  This appliance must use a room thermostat, for increased comfort and greater energy savings.
- Remote control (7-8), for remote control and regulation of the boiler, with weekly chronothermostat and climatic regulation functions.
- Optional DHW storage probe to be fitted to 11-12 otherwise leave 10K -1,8K resistors fitted (removing resistors will create a boiler malfunction + result in no C. heating or hot water production E12.
  Using a storage thermostat to be fitted to 5-6, leave the resistor (only 10KOhm) fitted and set the boiler on "economy".

Into the boiler jacket, there is a terminal block as showed on the pictures (Fig. 6):

- External temperature probe
  With the probe (optional) connected, the boiler works in outside compensation temperature mode, depending on the compensation curve settled (ref. 1.4). If no probe is connected, the boiler works in standard mode and setting of a compensation curve (parameter 9 of menu) is ignored by the control system.
- External pump (500)
  It's possible to connect an external pump (max 100W) to the terminal block.
- Solenoid valve for gas (117)
  Every times the boiler gas valve opens the circuit board supplies (max) 20W to the terminal block (3-4 fig. 6).

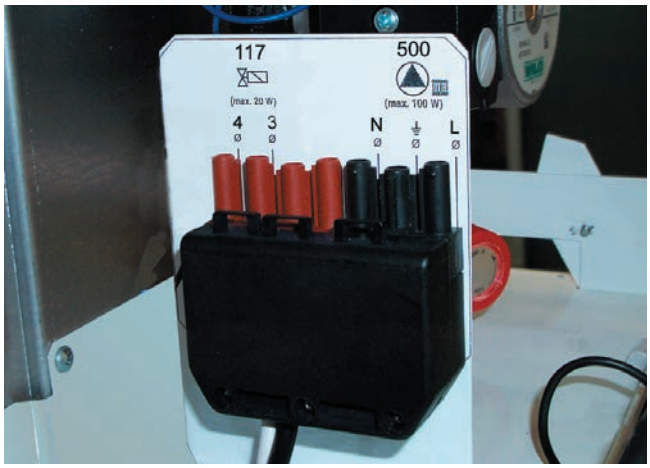

fig. 6

Suggested conection for storage cylinder:

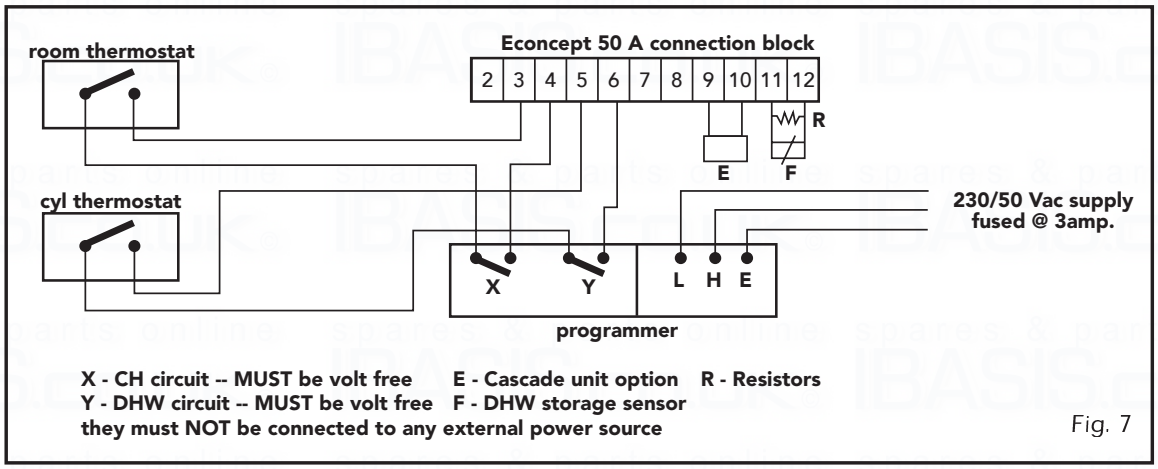

Fig. 7

Positioning the external probe

The external probe is best installed on a wall facing north, north-west or which borders the majority of the main living area. The probe must never be exposed to the early morning sun, and, in general and where possible, must not receive direct sunlight; if necessary, it should be shielded.

The probe must not in any case be fitted near windows, doors, ventilation openings, flues, or sources of heat which may alter the reading.

Note: The maximum length allowed for the electrical cable connecting the boiler to the external probe is 50 m. A common two-lead cable can also be used.

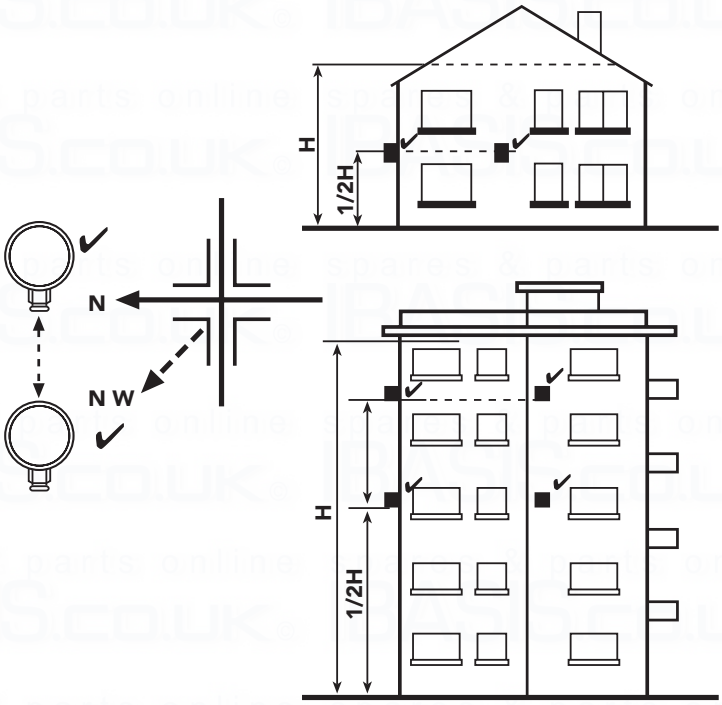

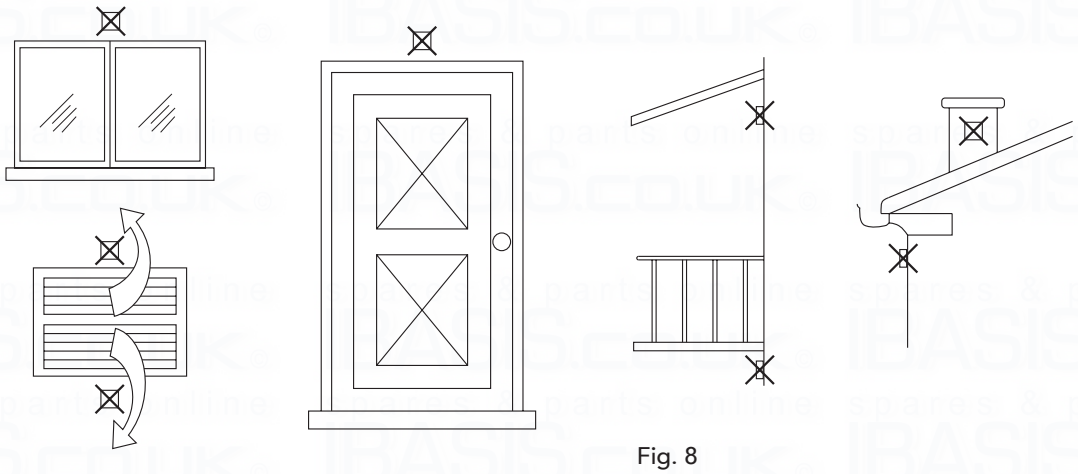

Fig. 8

2.6 Flues

Econcept is a type-C boiler with forced draught, the air inlet and the flue gas outlet must be connected to one of the exhaust–intake systems indicated as follows. Using the tables and the methods of calculation described, first verify, before installation, that the flues do not exceed the maximum allowed length.

Connection to concentric pipes

The total length in linear metres of the concentric pipes must not exceed the maximum length indicated in the first table below. The second table shows the reductions to be used for any bends in the pipes, excluding the initial one.

	Maximum allowable pipe length	
	Ø125/80 mm concentric	
	Vertical	Horizontal*
Econcept 50 A	12 m	12 m

Reducers for concentric bends	
90° concentric bend	0,5 m
45° concentric bend	0,25 m

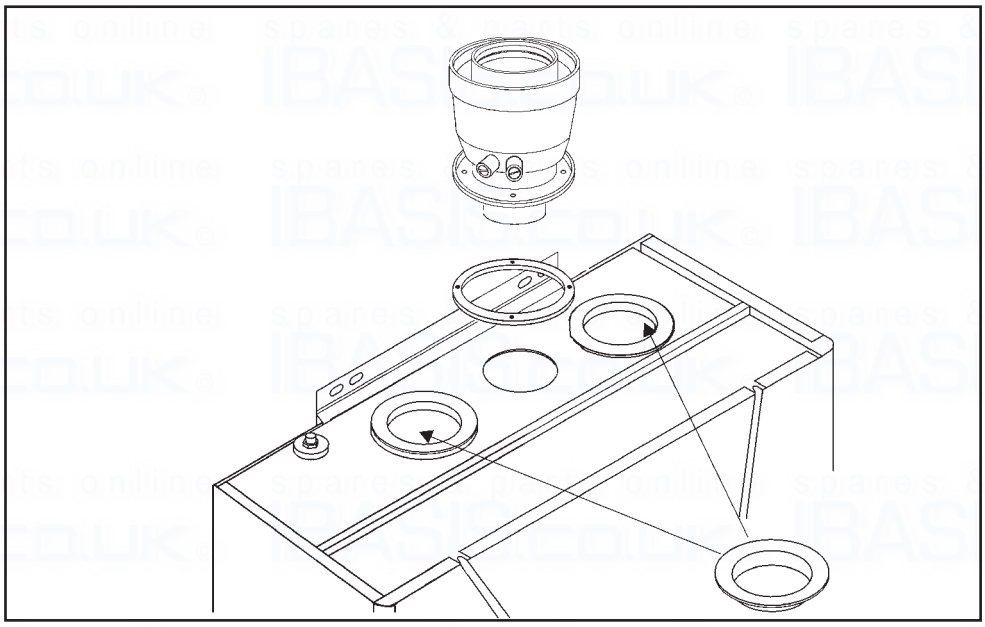

Fig. 9

Please consider that the horizontal concentric piping must have a slope towards the boiler of at least 3 mm/m, to allow the condensation which forms in the flues to flow back to the boiler, and avoid external dripping. The concentric pipes should be sealed with the relative pipe coupling seal at the points of coupling to the wall. The external piping must protrude from the wall between 10 and 60 mm.

Two pipe flue system

The separate Ø80 pipes for air intake and flue gas exhaust can be connected directly to the boiler, as shown in Fig. 10.

Upon request, a wide range of pipes, bends and accessories can be supplied. For the various components, refer to tables 1-2 or to the flue accessory catalogue.

A simple calculation can be performed to ensure that the maximum allowable pipe length is not exceeded:

1. For each component, table 1-2 lists the loss of pressure in "equivalent air-metres", depending on the position of installation of the component itself (air intake or flue gas exhaust, vertical or horizontal).

   The loss is called "equivalent length" as it relates to the loss of length in the flue system due to fuctional losses of bends. For example, a 90° Ø80 bend in flue gas exhaust has a loss equivalent to 2.5 air-metres, that is equal to 2.5 linear metres of flue pipe.
2. Once having completely defined the layout of the double flue system, add the losses in equivalent-metres, according to the position of installation of all the components and accessories in the system
3. Check that the total loss calculated is less than or equal to **45 m** equivalent metres, that is the maximum allowable for this model of boiler.

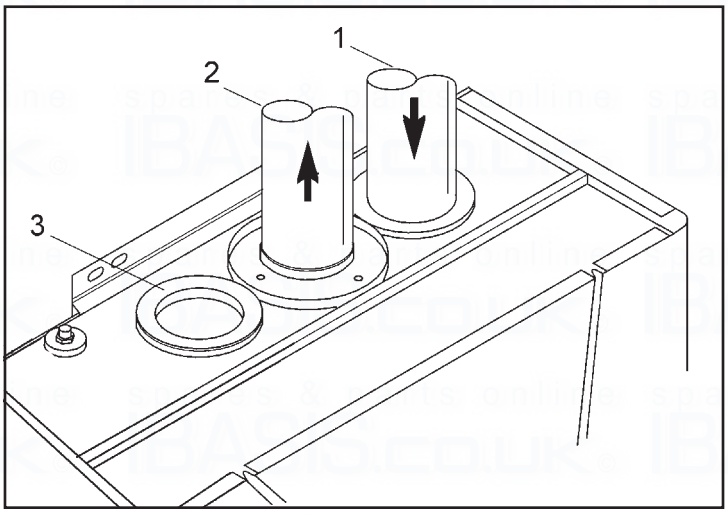

Fig. 10

Table of losses for piping and accessories

Tab. 1

Accessories Ø 80		Reduction			
		Air		Flue	
Description		Vertical	Horizontal	Vertical	Horizontal
Tubo Ø 80 male-female	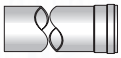 KWMA38A • 0,50 m	0,5	0,5	0,8	1
	KWMA83A • 1,00 m	1	1	1,6	2
Male-female bend 90° Ø 80 mm	KWMA82A	1,5		2,0	
Condensate flue outlet	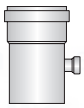 KWMA55U			3	

Tab. 2

Accessories Ø 80		Reduction			
		Air		Flue	
Description		Vertical	Horizontal	Vertical	Horizontal
Airwall terminal products of combustion Ø80 mm	KWMA86A				5
Air terminal of inlet protection Ø80 mm	KWMA85A		2		
Outlet flue air inlet for connection with split end Ø80 mm	KWMA84U	12			

The loss values listed refer to original FERROLI pipes and accessories

Example of how to calculate the connection of two separate pipes, max flue length: 45 metres
The flue and air pipes must be sloped towards the boiler by at least 3%.

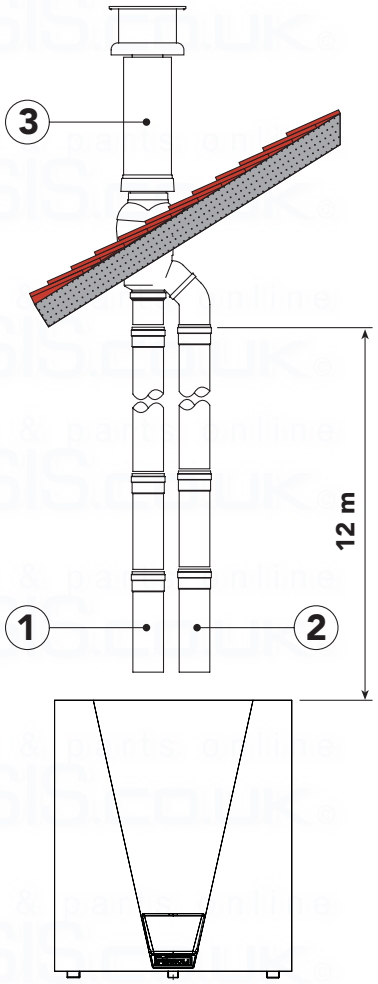

Ref.	N° Pieces	Description	Length o loss
1	12	Vertical air pipe	19,2 m
2	12	Vertical flue pipe	12,0 m
3	1	Flue terminal	12,0 m
		Total	**43,2 m**

Fig. 11

Terminal Position

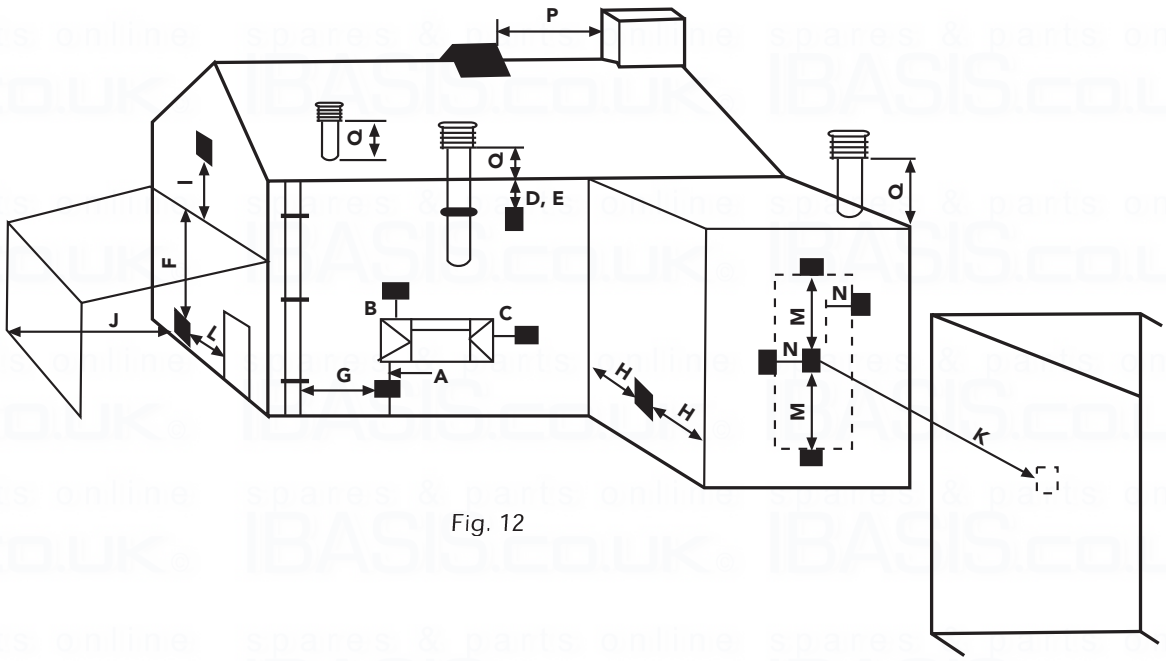

Fig. 12

Minimum dimensions of flue terminal positions

Dimensions	Terminal position (kW input expressed in net)	Balanced flues room sealed Fanned draught
A[a]	Directly below an opening, air brick, (0-7 kW) opening windows, etc. (>7-14 kW) (>14-32 kW) (>32-70 kW)	300 mm
B[a]	Above an opening, air brick, (0-7 kW) opening windows, etc. (>7-14 kW) (>14-32 kW) (>32-70 kW)	300 mm
C[a]	Horizontally to an opening, air brick, (0-7 kW) opening windows, etc. (>7-14 kW) (>14-32 kW) (>32-70 kW)	300 mm
D	Below gutters, soil pipes or drain pipes	75 mm
E	Below eaves	200 mm
F	Below balconies or car port roof	200 mm
G	From a vertical drain pipe or soil pipe	150 mm[b]
H	From an internal or external corner	300 mm
I	Above ground roof or balcony level	300 mm
J	From a surface facing the terminal (also see 6.1.2)	600 mm
K	From a terminal facing the terminal	1200 mm
L	From an opening in the car port (e.g. door, window) into the dwelling	1200 mm
M	Vertically from a terminal on the same wall	1500 mm
N	Horizontally from a terminal on the same wall	300 mm
O	From the wall on which the terminal is mounted	N/A
P	From a vertical structure on the roof	N/A
Q	Above intersection with roof	N/A

NOTE N/A = Not applicable

[a] In addition, the terminal should not be nearer than 150 mm (fanned draucht) or 300 mm (natural draught) to an opening in the building fabric formed for the purpose of accommodating a built-in element such as a window frame, (see Figure C2). Separation distances are linked to the rated heat inputs as shown.

2.7 Condensation discharge connection

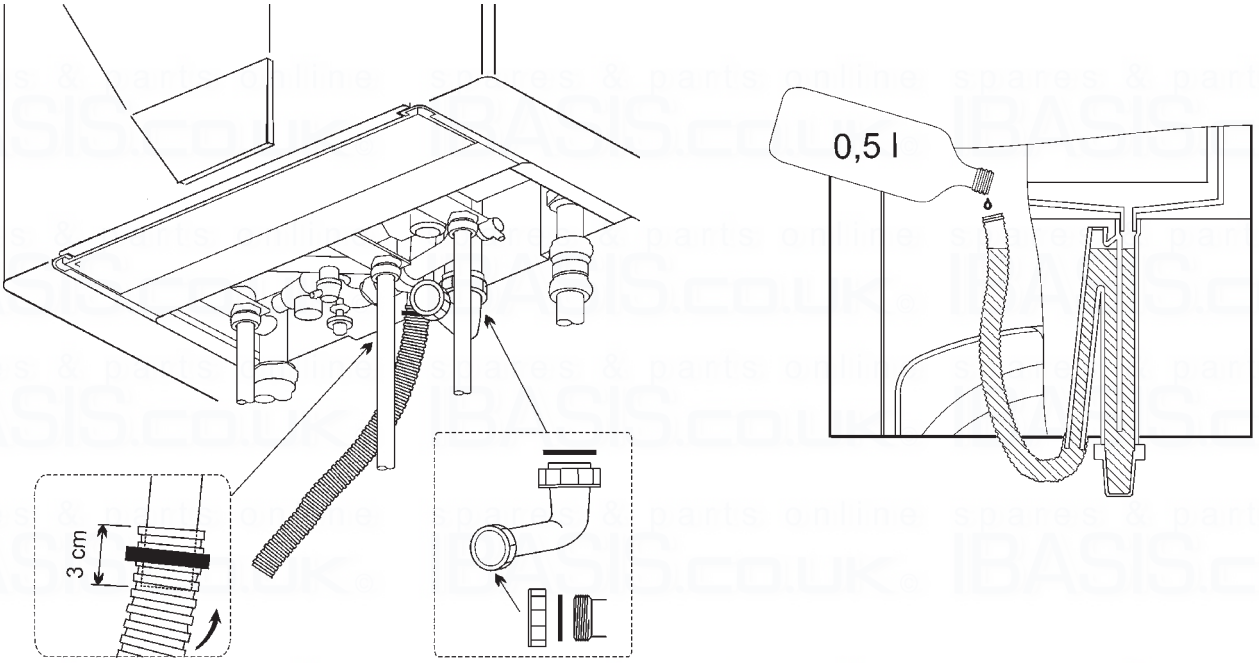

Fig. 13

Boiler is provided with an internal watertrap for the condensation discharge. Fit the inspection bowl **"A"** and the flexible tube **"B"**. Fill the siphon with 0,5 l. of water and connect the flexible tube to the draining system. If this is not possible the trap will fill upon the boiler running for approx 20 mins, (care should be taken not to brear any fumis in discharged from the condense hose due to insufficient water being present in the trap).

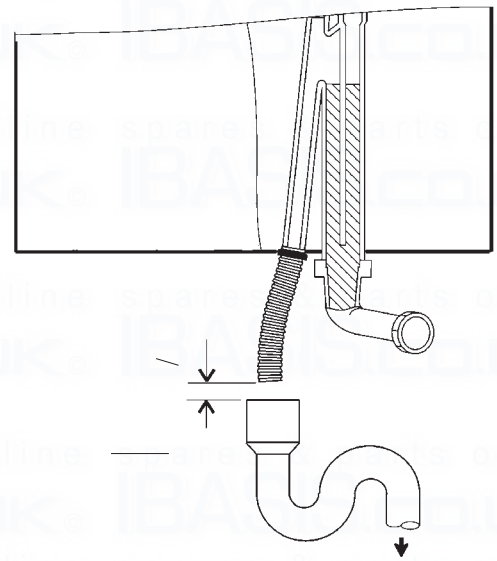

Fig. 14

Connect to internal waste system or soakaway.
Using plastic not copper.

2.8 Modular installation

Can be used as a single unit or for modular installation. If the output required from the system exceeds 44,9 kW, two or more Econcept 50 boilers can be connected in a modular system (or cascade), as shown as an example in figure.

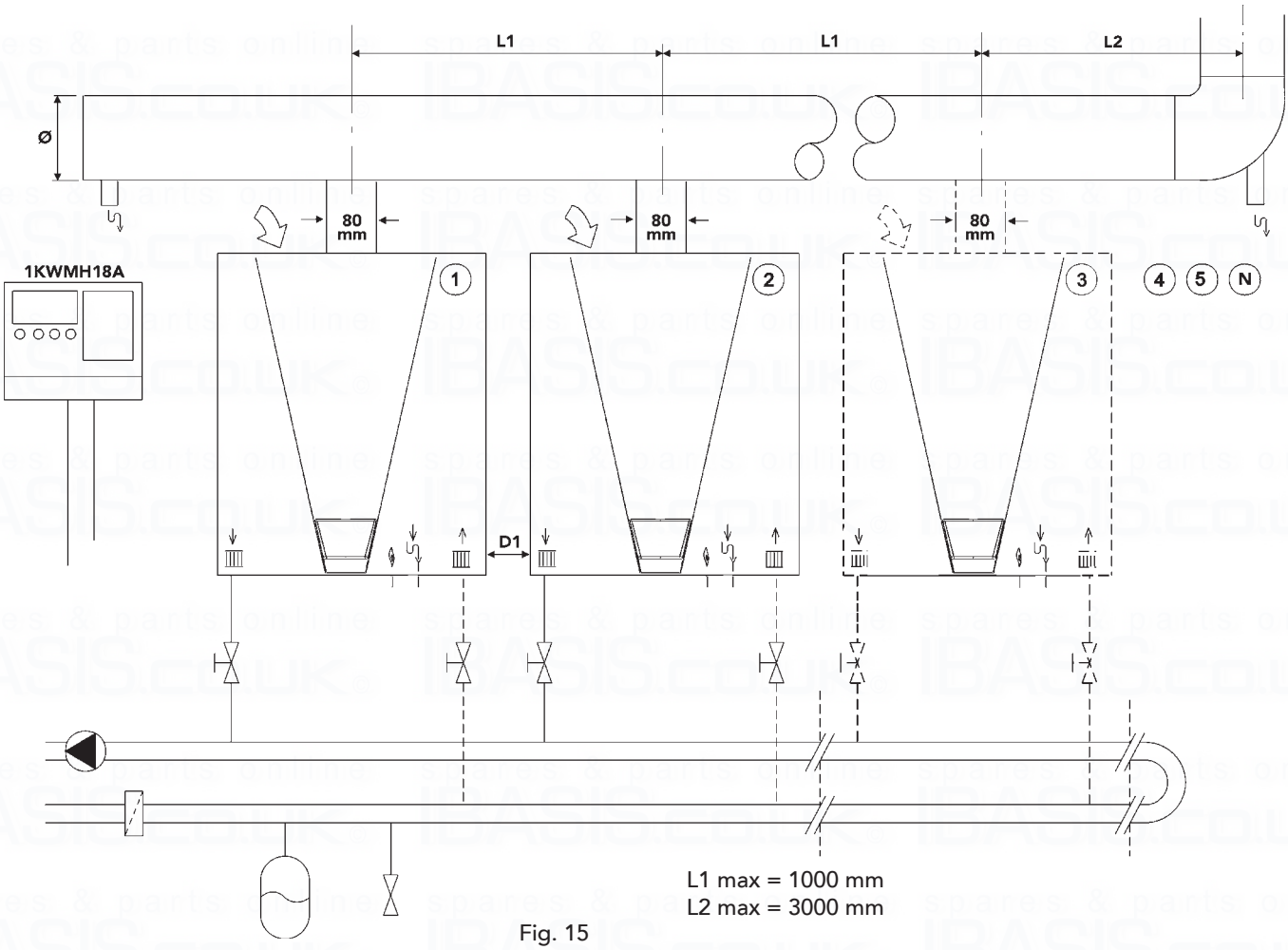

Fig. 15

It is necessary to meet all the requirements imposed by standards and laws in force applicable to this generator "equivalent" of total potentiality N x 44.9 kW.

Ventilation required via 80mm Ferroli piping (see page 16).

For connection in cascade, please observe the following instruction:

Hydraulic connection

- Connect all units to a double collector hydraulic circuit (one collector for flow one for return) or single-pipe, utilising isolation valves which permit the isolation at each boiler in case of maintenance. Distance between module and module (D1) must be lower than 0.5 metres.
- Provide safety and protection device prescribed by standards in force for modular boilers complete of N x 44.9 kW capacity. They must be installed on the flow circuit pipe, immediately below last module, within a distance not higher than 0.5 metres.

- It is emphasized that every Econcept 50 module is equipped with all its own necessary and/or compulsory safety devices. In particular, every Econcept 50 device is equipped with its own safety valve against overpressure (6bar), low water pressure switch, safety stat, limit stat. In case of overheating, absence of water or absence of circulation into the boiler, safety devices cause the switch-off or the locking out of boiler, preventing its running.

Cascade control system and electric connections

- Use the electronic control box sequence 1KWMH18A (optional) for the automatic management of cascade devices. Every control box allow the management from 2 to 5 Econcept boilers in cascade. More control boxes can be connected one to another in parallel to allow further expansions (10, 15, 20 … Econcept 50 boilers in cascade). For electric connections, see the instruction provided in the kit.

Flue Evacuation

- The collector, the flue and the chimney must be correctly sized, designed and built to the standards in force. They must be made of appropriate material for the purpose, that means resistant to high temperatures and corrosion, smooth inside and hermetically sealed. In particular, connections must be condensation-tight. Furthermore, provide suitable condensation drainage points, connected to a trap.
- Connect the flue outlet (Ø 80) of single modules, as shown in figure, is being careful to respect diameters of collectors and chimneys written in the table below.

N° Econcept 50 A	Ø collector/chimney
2	150
3	180
4	200
5	250
6	250
7	300
8	300
9	350
10	350

Fig. 15a

- Air intake can take place in the boiler room, on condition that the room is properly ventilated according to the standards in force. Be careful to remove air blanking plus from every single module.

3. SERVICE AND MAINTENANCE

3.1 Settings

The adjustment of the software operations must only be performed by Qualified Personnel.

FERROLI S.p.A. declines all liability for damage to persons and/or things deriving from tampering with the appliance by non-authorised persons.

Gas conversion

A conversion kit is required:

1 Remove jacket.
2 Open sealed room department.
3 Release **"A"** connection.
4 Change the injector using the one in the kit.
5 Re-tighten **"A"** and check that there are no gas losses.
6 Once the regulation has been made, apply the data plate contained in the conversion kit next to the data plate and reassemble the boiler casing and the lower protection plate.
7 Run the boiler.

Test mode

Press "⊕ ⊖" and "⊕ ⊖" keys together for 3 seconds to enter mode.

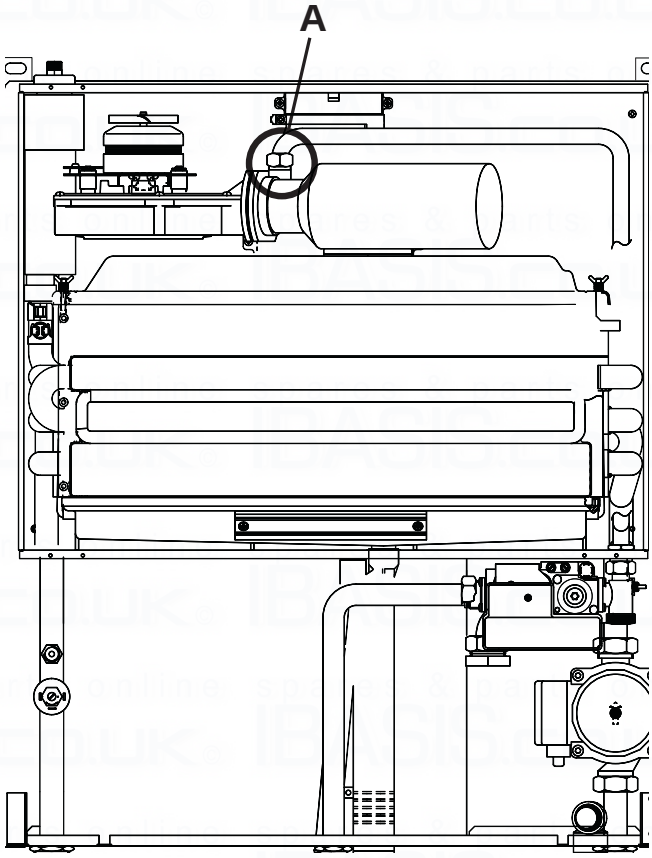

Catagorie	Fuel type	Ø
2E	See technical data table	
3P		

Fig. 16

Boiler parameters regulation

Pressing "M - mode" button and "+ −" button simultaneously for more than 3 seconds it allows entry to the boiler parameters menu.

Then pressing "M" button it is possible to scroll the parameters, while with "+ −" and "+ −" buttons it is possible to modify values set.

It is necessary to press "C - confirm" button to set new values.

Temperatures regulation

Pressing "M - mode" button it is possible to enter the user menu (see par. 1 for a complete description) where it is possible to modify:

Par. "1" • CH temperature

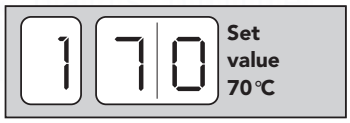

Adjustable from 30 to 90°C

Par. "2" • DHW temperature

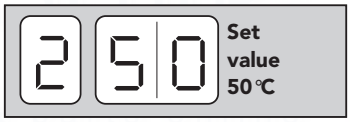

Adjustable from 40 to 65°C

☞ Regulations over described can be made only if remote control is not connected.

☞ The boiler is equipped with a safety device that temporarily stops the running in case of too high Δt.

3.2 Commissioning and testing

The appliance must only be set-up for use by Qualified Personnel, such as personnel from Technical organization.

Checks to be performed during the first ignition, and after all maintenance operations which may have required the disconnection of the systems or intervention on the safety devices or parts of the boiler:

Before igniting the boiler:

- Open any shut-off valves between the boiler and the systems
- Check the seal of the gas system, proceeding with care and using a leak detection solution to find any leaks from the connections.
- Fill the system as indicated earlier and ensure that the air contained in the boiler and the system has been completely vented, by opening the air bleeding valve on the top of the appliance (Fig. 2) and any bleeding valves in the system.
- Check that there are no water leaks in the heating system, in the domestic hot water circuits, in the connections or in the boiler
- Check the correct connection of the electrical system
- Check that the appliance is properly earthed;.
- Check the correct connection of the appliance to the system for draining the condensation and the functioning of the condensation drain system itself.
- Check that the pressure value and gas rate for the heating system are correct.
- Check that there are no flammable liquids or materials in the immediate vicinity of the boiler

Igniting the boiler:

- Open the gas control valve upstream from the boiler.
- Purge the gas supply.
- Ensure electrical controls are calling for heat.
- Place the main switch in the ON position.
- The boiler will switch on and perform a complete self-test cycle lasting around one minute, to check the operation of the main parts. The display shows, in sequence:

Software version

Parameter version

Operation in test - FH1

- If the cycle is performed correctly:
  - If domestic hot water or heating is not required, the display shows a small " ▫ " (standby mode) followed by the temperature value of the C.H. outlet sensor. Then use the room thermostat or remote control to activate the request for heating
  - If there is a request, the display will pass from the standby phase " ▫ " to the heating phase " c " and the boiler will automatically begin operation, controlled by its regulation and safety devices.
  - If anomalies arise during the self-test cycle or the successive ignition phase, the display will show the corresponding error code and the boiler will shut-down. Wait around 15 seconds and then press the reset button. The boiler will repeat the ignition cycle. If, after a second attempt, the boiler does not start, refer to the paragraph on "Troubleshooting" 3.4.

Note In the case of power failures while the boiler is in operation, the burner assembly will switch off. On the return of mains power, the boiler will again perform the self-test cycle, following which the burner assembly will automatically restart (if there is still a request for heat).

Checks during operation

- Ensure there are no gas or water leaks.
- Check the efficiency of the flues and air-flue gas pipes during the operation of the boiler.
- Check that the water circulation between the boiler and the systems is correct.
- Ensure that the gas valve modulates correctly.
- Check the correct ignition of the boiler, effecting a series of ignition and shut-down tests using the room thermostat or the remote control.
- Ensure that the gas rate at the meter is correct as giving in table at pag. 30.
- Check the correct setting of the parameters and effect any custom settings required (compensation curve, heat rates, temperatures, etc.)

Shut-down

Close the gas control valve upstream from the boiler and disconnect the electrical power supply to the appliance.

Warning - For long periods of inactivity during the winter months, in order to avoid damage due to freezing, all the water should be drained from the boiler, both the domestic hot water and the heating system; alternatively, drain only the domestic hot water and introduce the relative antifreeze into the heating system.

3.3 Maintenance

The following operations must only be performed by Qualified Personnel, such as personnel from Ferroli Limited UK.

Seasonal checks on the boiler and the flue

The following checks should be made on the appliance at least once a year:

- The control and safety devices (gas valve, thermostats, etc.) must be working properly.
- The pipes and the air-flue gas terminals must be free of obstacles and not contain any leaks.
- The condensation draining system must be efficient and must not contain any leaks or blockages
- The gas and water systems must be perfectly sealed.
- The burner assembly and the heat exchanger must be clean. Follow the instructions in the next paragraph.
- The electrodes must be free of deposits and positioned correctly.
- The pressure of the water system when cold must be around 1 – 1.5 bar; if not, top up system.
- The expansion vessel must be presurised.
- The circulation and domestic hot water pumps must be free to run.

Cleaning the boiler body and the burner assembly

The burner assembly and the parts of the boiler body in contact with condensation should be cleaned once a year. To clean these parts, use soft brushes or compressed air; do not use chemical products or steel brushes.

After these checks, ensure there are no escape of gas.

3.4 Troubleshooting

Diagnostics

The boiler features an advanced self-diagnostic system. In the case of an fault in operation, the display flashes and the code identifying the fault appears. The faults marked with the letter **"A"** cause the permanent shut-down of the boiler. To reset operation the boiler must be restarted manually, pressing the **"R"** (reset) button.
The faults marked by the letter **"F"** cause temporary shut-down and are reset automatically as soon as the value returns within the boiler's normal operating range.

The following table lists a number of indications for resolving the faults signalled by the boiler. Adjustmens on the appliance must only be carried out by Qualified Personnel, such as the personnel from the FERROLI Customer Technical Service Centre. For any operations on the appliance or which require the opening of the boiler, always request the assistance of the service centre.

	Fault	Possible cause	Solution
A01	Failed burner assembly ignition	• No gas • Ignition or detection electrode fault • Defective gas valve • Low gas supply pressure • Air trap obstructed	• Check that the gas flow to the boiler is correct and that air has been purged from the piping • Check the wiring to the electrodes and that these are positioned correctly and free of deposits • Check and replace the gas valve if required • Check the gas mains pressure • Check and if necessary clean the air trap
A02	Safety thermostat activation	• Outlet sensor not active • No system circulation	• Check the correct positioning and operation of the outlet sensor • Check the circulator, by-pass and valves in the system
A03	Flue safety device intervention	• Flue partially blocked or insufficient	• Check the efficiency of the flue, the flue gas exhaust pipes and the outlet terminal
A04	No flame following the ignition phase	• Air/flue pipes blocked • Air trap obstructed • Ionization electrode fault • Unstable flame • Gas valve Offset fault	• Free the obstructions from the flue, flue gas exhaust and air inlet pipes and terminals • Check and if necessary clean the air trap • Check the position of the ionization electrode and raplace it if necessary • Check the burner • Check the Offset setting at the minimum power
F05	Insufficient water system pressure	• System empty • Pressure switch damaged or wiring broken	• Fill the system • Check the wiring and see that the pressure switch closes the contact at 1.5 bar
F06	Fan fault	• Fan not powered • Defective fan	• Check the wiring to the fan • Replace the fan

	Fault	Possible cause	Solution
F 07	High flue gas temperature 3 x A07 in 24 hours = A03	• Flue partially blocked or insufficient sized	• Check the efficiency of the flue, the flue gas exhaust pipes and the outlet terminal
F 08	Excessive central heating outlet temperature	• Pump blocked • Pump faulty • Delivery sensor fault • Water filter obstructed	• Free the pump by removing the cap and rotating the shaft with a screwdriver • Check or replace the condenser or the pump • Check the position and if necessary change the delivery sensor • Check the water filters in the system
F 09	Excessive central heating return temperature	• No system circulation • Water filter obstructed	• Check system and pump • Check the water filters in the system
F 10	Outlet sensor faulty	• Sensor damaged or wiring cut	• Check wiring or replace the sensor
F 11	Return sensor faulty	• Sensor damaged or wiring cut	• Check wiring or replace the sensor
F 12	Domestic hot water sensor faulty	• Sensor damaged or wiring cut	• Check wiring or replace the sensor
F 13	Flue gas sensor faulty	• Sensor damaged or wiring cut	• Check wiring or replace the sensor
F 14	External probe faulty (if installed)	• Sensor damaged or wiring short-circuited	• Check wiring or replace the sensor
A 16	No communication between main board and ignition devices	• Wiring cut or incorrect between main board and ignition devices	• Check the wiring and the connections between the boards
F 17 F 18 F 19	Microprocessor faulty	• Microprocessor operation faulty	• Disconnect and restore the electrical power supply. If the problem persists check and/or replace the main board

4. TECHNICAL CHARACTERISTICS AND DATA

4.1 Dimensions and connections

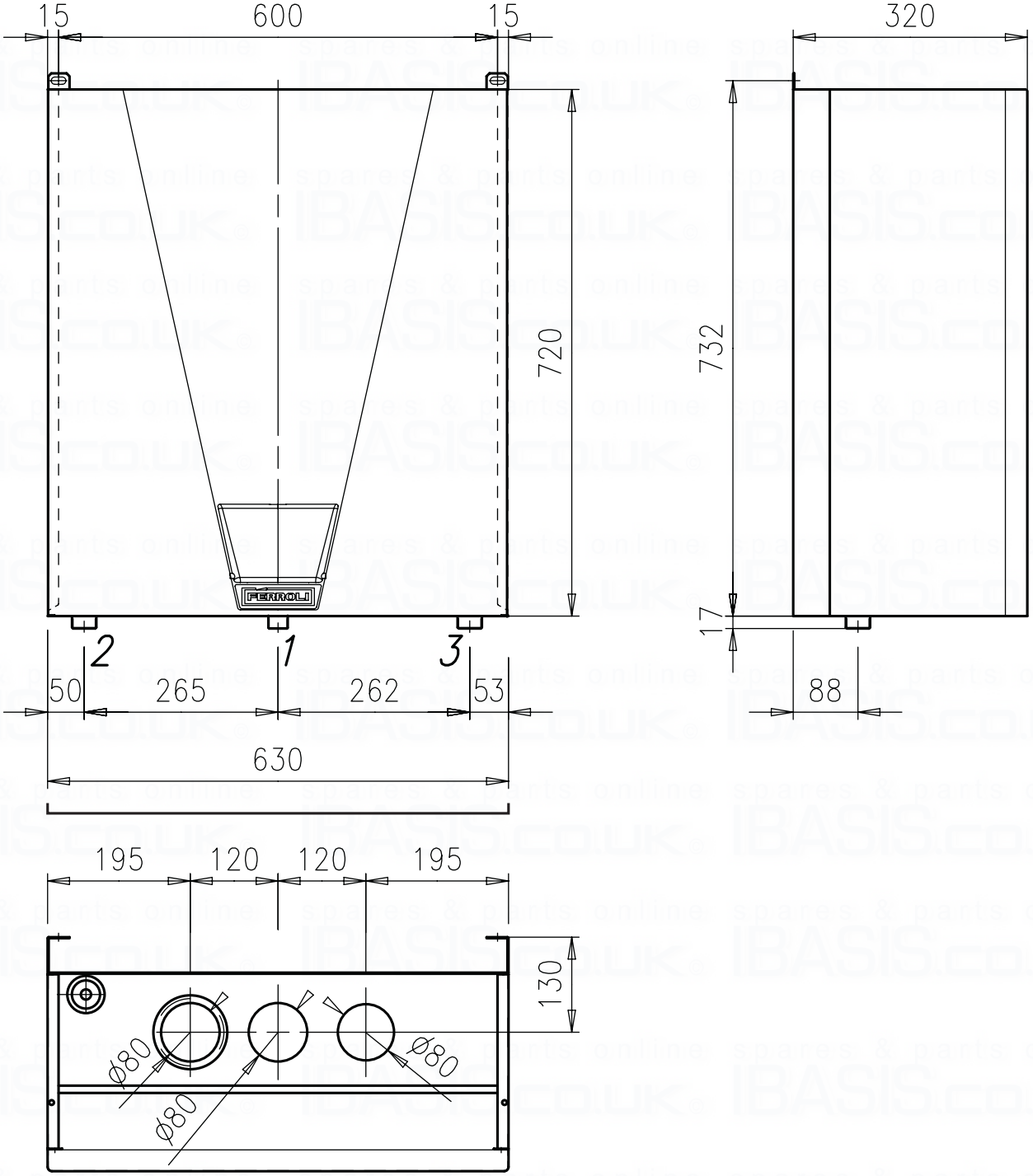

Key

1 Gas inlet
2 C. H. flow
3 C. H. return

Fig. 17

4.2 General view and main components

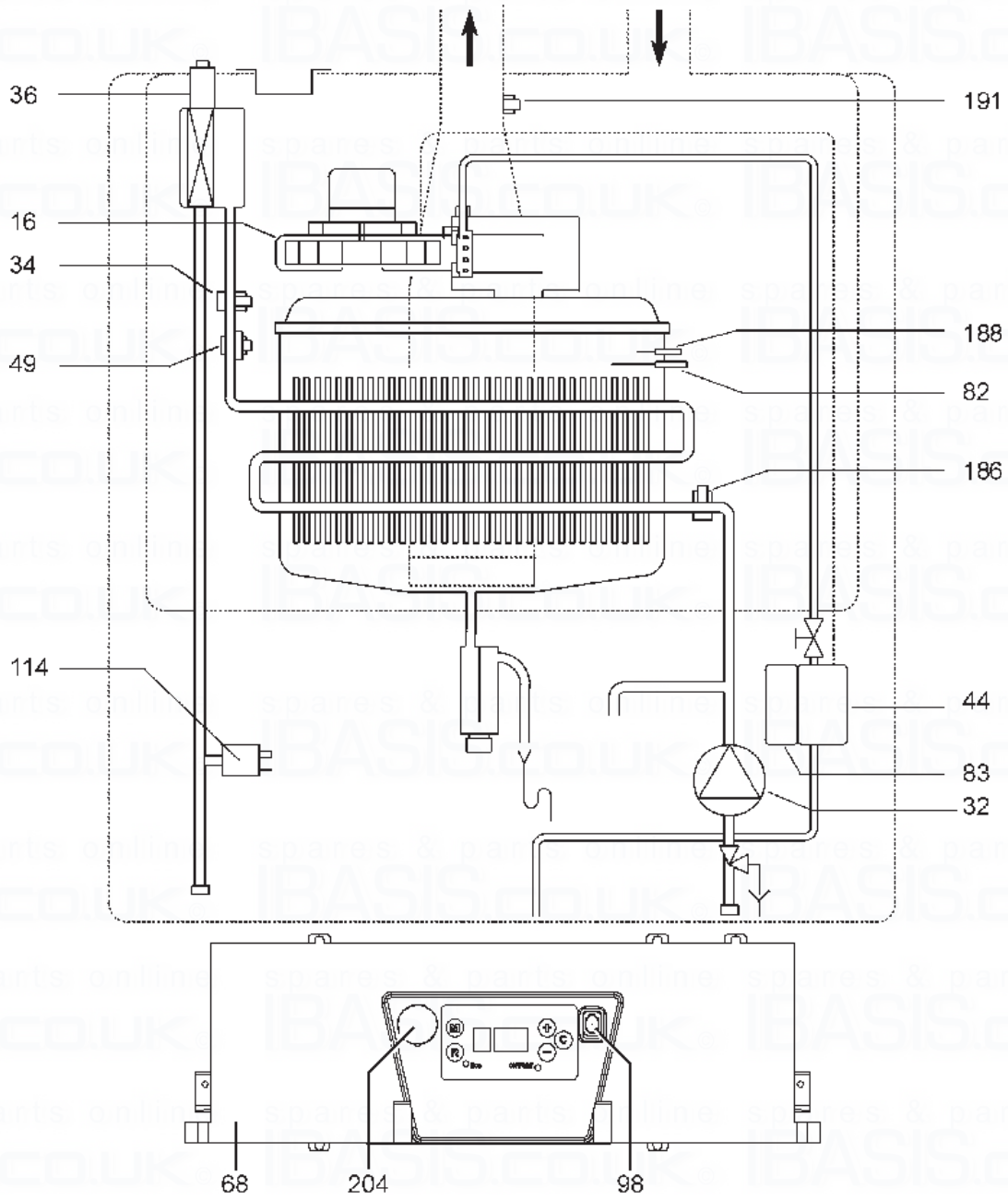

Fig. 18

Key

16	Fan
32	Central heating pump
34	C.h. flow temperature sensor
36	Automatic air vent
44	Combination gas valve
49	Overheat cut-off thermostat
68	Control box with p.c.b.
82	Ionisation electrode
83	Full sequence automatic control
98	Switch
114	Low water pressure switch
186	Return temperature sensor
188	Hot surface igniter
191	Exhaust temperature sensor
204	PC connector

4.3 Technical data table

Powers		Pmax	Pmin
Hi Heating power	kW	46,0	13,8
Useful Heating Power 80° C - 60° C	kW	45,2	13,6
Useful Heating Power 50° C - 30° C	kW	48,4	14,4
Natural Gas delivery (G20)	m^3/h	4,86	1,46
Natural Gas supply pressure (G20)	mbar	20	20
LPG flow rate (G31)	kg/h	3,6	1,8
LPG supply pressure (G31)	mbar	37	37
Combustion		**Pmax**	**Pmin**
CO2 (G20 - Natural Gas)	%	9,0	8,7
Gas nozzle (G20 - Natural Gas)	Ø mm	6,70	
CO2 (G31 - Propane)	%	10,0	9,5
Gas nozzle (G31 - Propane)	Ø mm	4,75	
Flue temperature 80° C-60° C	°C	65	65
Flue temperature 50° C-30° C	°C	45	38
Flue flow rate	kg/h	77	24
pH of condensation water	pH	4,1	
Energy marking (92/42 EEC directive)		★★★★	
NOx emission class		5	
Heating			
Heating temperature adjustment range	°C	20 - 90	
Maximum working pressure in heating	bar	6	
Minimum working pressure in heating	bar	0,8	
Expansion vessel pre-filling pressure	bar	1	
Total boiler water content	litres	2,7	
Dimensions, weights connections			
Height	mm	720	
Width	mm	630	
Depth	mm	280	
Weight empty	kg	62	
Gas system connection (With isolation valve fitted)	mm	3/4"	
Heating system connections (With isolation valves fitted)	mm	1"	
Maximum length of separate flues D=80* (*Measurement given in equivalent linear metres – cfr FERROLI calculation system)	m_{eq}	45	
Electrical power supply			
Max electrical power absorbed	W	190	
Power voltage/frequency	V/Hz	230/50	
Proctection level	IP	X4D	

4.4 Diagrams

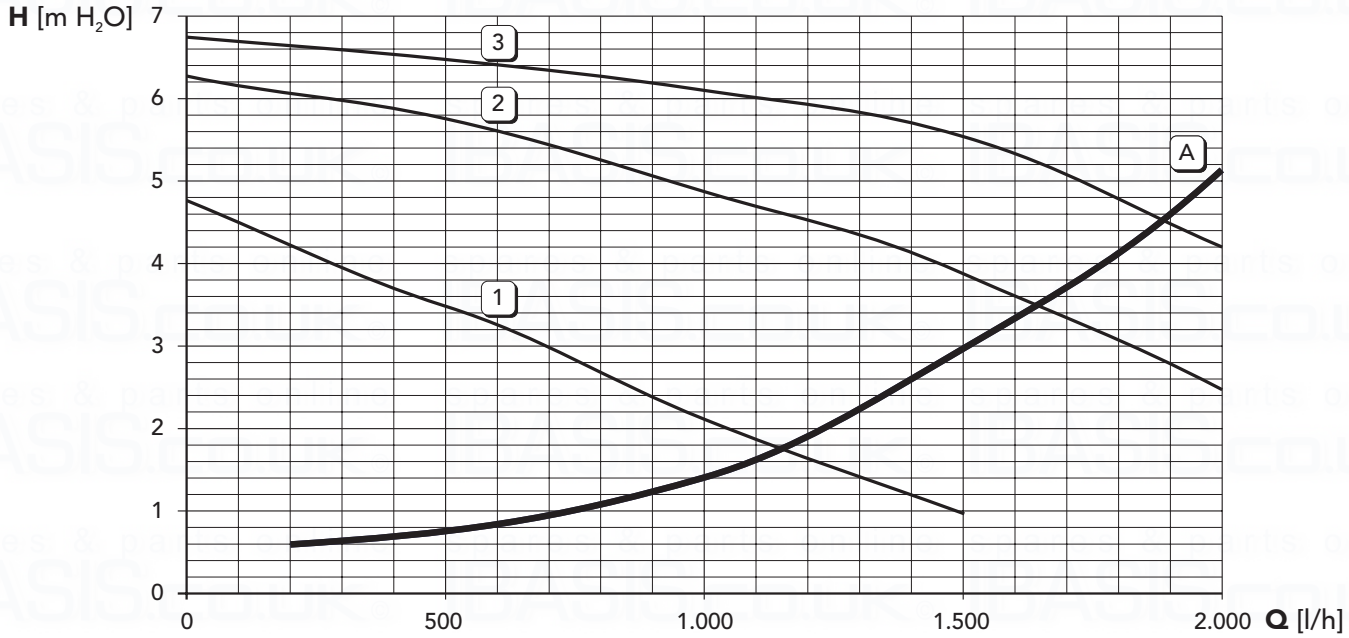

1 2 3 = Circulator speed

A = Boiler losses of head

Fig. 19

4.5 Wiring diagrams

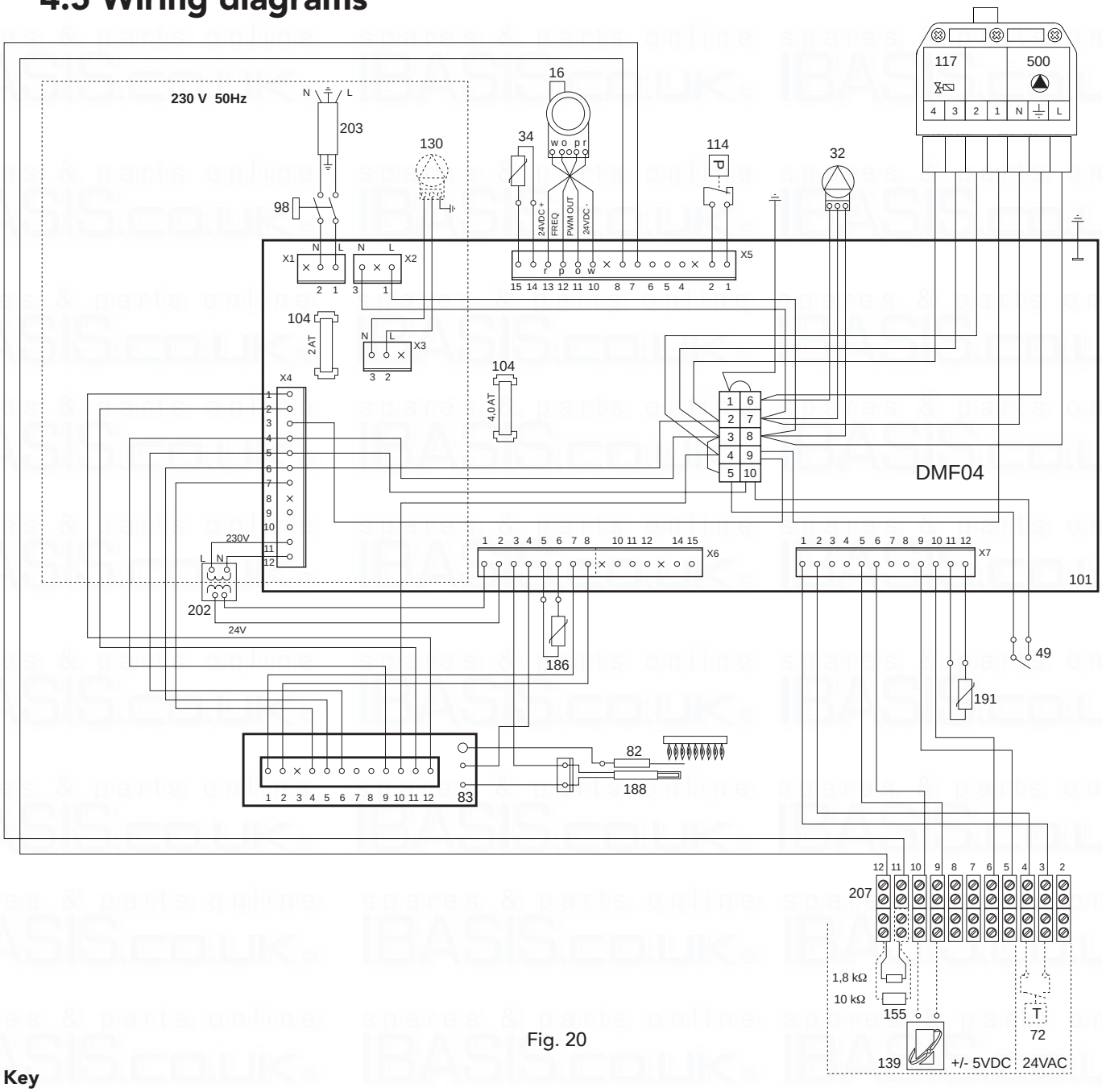

Fig. 20

Key

16	Fan	**130**	D.h.w. pump (optional)
32	Central heating pump	**139**	Room unit (optional)
34	C.h. flow temperature sensor	**155**	Storage tank sensor (optional)
44	Combination gas valve	**186**	Return temperature sensor
49	Overheat cut-off thermostat	**188**	Hot surface igniter
72	Room thermostat (not fitted)	**191**	Exhaust temperature sensor
82	Ionisation electrode	**202**	Transformer 230v-24v
83	Full sequence automatic control	**203**	230v
98	Switch	**204**	PC connector
101	Main p.c.b.	**207**	Boiler connector
104	Fuse	**500**	External pump (100W - not provided)
114	Water pressure switch		
117	Opening solenoid valve for gas (max 20W)		

spares & parts online IBASIS.co.uk

BENCHMARK No. 2 6 7 _ _ _ _

Please add the first 4 digits of the Boiler serial No to complete the BENCHMARK No.

benchmark™ COLLECTIVE MARK

GAS BOILER COMMISSIONING CHECKLIST

BOILER SERIAL No. _____ **NOTIFICATION No.** _____

CONTROLS *To comply with the Building Regulations, each section must have a tick in one or other of the boxes*

TIME & TEMPERATURE CONTROL TO HEATING	ROOM T/STAT & PROGRAMMER/TIMER	☐	PROGRAMMABLE ROOMSTAT	☐
TIME & TEMPERATURE CONTROL TO HOT WATER	CYLINDER T/STAT & PROGRAMMER/TIMER	☐	COMBI BOILER	☐
HEATING ZONE VALVES	FITTED	☐	NOT REQUIRED	☐
HOT WATER ZONE VALVES	FITTED	☐	NOT REQUIRED	☐
THERMOSTATIC RADIATOR VALVES	FITTED	☐		
AUTOMATIC BYPASS TO SYSTEM	FITTED	☐	NOT REQUIRED	☐

FOR ALL BOILERS CONFIRM THE FOLLOWING

THE SYSTEM HAS BEEN FLUSHED IN ACCORDANCE WITH THE BOILER MANUFACTURER'S INSTRUCTIONS? ☐

THE SYSTEM CLEANER USED

THE INHIBITOR USED

FOR THE CENTRAL HEATING MODE, MEASURE & RECORD

GAS RATE		m^3/hr		ft^3/hr
BURNER OPERATING PRESSURE (IF APPLICABLE)	☐	N/A		mbar
CENTRAL HEATING FLOW TEMPERATURE				°C
CENTRAL HEATING RETURN TEMPERATURE				°C

FOR COMBINATION BOILERS ONLY

HAS A WATER SCALE REDUCER BEEN FITTED? YES ☐ NO ☐

WHAT TYPE OF SCALE REDUCER HAS BEEN FITTED?

FOR THE DOMESTIC HOT WATER MODE, MEASURE & RECORD

GAS RATE		m^3/hr		ft^3/hr
MAXIMUM BURNER OPERATING PRESSURE (IF APPLICABLE)	☐	N/A		mbar
COLD WATER INLET TEMPERATURE				°C
HOT WATER OUTLET TEMPERATURE				°C
WATER FLOW RATE				lts/min

FOR CONDENSING BOILERS ONLY CONFIRM THE FOLLOWING

THE CONDENSATE DRAIN HAS BEEN INSTALLED IN ACCORDANCE WITH THE MANUFACTURER'S INSTRUCTIONS? YES ☐

FOR ALL INSTALLATIONS CONFIRM THE FOLLOWING

THE HEATING AND HOT WATER SYSTEM COMPLIES WITH CURRENT BUILDING REGULATIONS ☐

THE APPLIANCE AND ASSOCIATED EQUIPMENT HAS BEEN INSTALLED AND COMMISSIONED IN ACCORDANCE WITH THE MANUFACTURER'S INSTRUCTIONS ☐

IF REQUIRED BY THE MANUFACTURER, HAVE YOU RECORDED A CO/CO_2 RATIO READING? N/A ☐ YES _____ CO/CO_2 RATIO

THE OPERATION OF THE APPLIANCE AND SYSTEM CONTROLS HAVE BEEN DEMONSTRATED TO THE CUSTOMER ☐

THE MANUFACTURER'S LITERATURE HAS BEEN LEFT WITH THE CUSTOMER ☐

COMMISSIONING ENG'S NAME PRINT _____ CORGI ID No. _____

SIGN _____ DATE _____

SERVICE INTERVAL RECORD

It is recommended that your heating system is serviced regularly
and that you complete the appropriate Service Interval Record Below.

Service Provider. Before completing the appropriate Service Interval Record below, please ensure you have carried out the service as described in the boiler manufacturer's instructions. Always use the manufacturer's specified spare part when replacing all controls

SERVICE 1 DATE
ENGINEER NAME
COMPANY NAME
TEL No.
CORGI ID CARD SERIAL No.
COMMENTS
SIGNATURE

SERVICE 2 DATE
ENGINEER NAME
COMPANY NAME
TEL No.
CORGI ID CARD SERIAL No.
COMMENTS
SIGNATURE

SERVICE 3 DATE
ENGINEER NAME
COMPANY NAME
TEL No.
CORGI ID CARD SERIAL No.
COMMENTS
SIGNATURE

SERVICE 4 DATE
ENGINEER NAME
COMPANY NAME
TEL No.
CORGI ID CARD SERIAL No.
COMMENTS
SIGNATURE

SERVICE 5 DATE
ENGINEER NAME
COMPANY NAME
TEL No.
CORGI ID CARD SERIAL No.
COMMENTS
SIGNATURE

SERVICE 6 DATE
ENGINEER NAME
COMPANY NAME
TEL No.
CORGI ID CARD SERIAL No.
COMMENTS
SIGNATURE

SERVICE 7 DATE
ENGINEER NAME
COMPANY NAME
TEL No.
CORGI ID CARD SERIAL No.
COMMENTS
SIGNATURE

SERVICE 8 DATE
ENGINEER NAME
COMPANY NAME
TEL No.
CORGI ID CARD SERIAL No.
COMMENTS
SIGNATURE

SERVICE 9 DATE
ENGINEER NAME
COMPANY NAME
TEL No.
CORGI ID CARD SERIAL No.
COMMENTS
SIGNATURE

SERVICE 10 DATE
ENGINEER NAME
COMPANY NAME
TEL No.
CORGI ID CARD SERIAL No.
COMMENTS
SIGNATURE

FERROLI TECHNICAL HELPLINE - 08707 282 885

Should you require help during installation
call our Technical Helpline on
08707 282 885 option 1
To book a Ferroli service engineer
call Ferroli caresafe on
08707 282 885 option 2

Phone numbers:

Installer _____

Service Engineer _____

BECAUSE OF OUR CONSTANT ENDEAVOUR FOR IMPROVEMENT DETAILS MAY VARY SLIGHTLY FROM THOSE QUOTED IN THESE INSTRUCTIONS.

ALL SPECIFICATIONS SUBJECT TO CHANGE

Please note - to avoid incurring unnecessary expense, in the event of a boiler shut down, check this is not caused by lack of electricity supply, gas supply or low water pressure before calling our Customer Service Helpline.

Lichfield Road, Branston Industrial Estate, Burton Upon Trent, Staffordshire DE14 3HD
Tel. 08707 282 885 - Fax 08707 282 886