Ferroli

GRUPPO FERROLI

DOMIcompact F 30 D

wall-mounted gas fired,
combination boiler

ISO 9001 : 2000
CERTIFIED COMPANY
TÜV CERT
DIN EN ISO 9001

cod. 3540B62/3 - 05/2006

CE

INSTRUCTIONS FOR USE, INSTALLATION AND MAINTENANCE
FOR THE UNITED KINGDOM & EIRE

GC N° 47-267-40

spares & parts online IBASIS.CO.UK

IMPORTANT

Your "benchmark" Installation, Commissioning and Service Record Log Book is enclosed in the last pages of this manual. "This record must be completed and left with the end user".

Ferroli is a member of the Benchmark initiative and fully supports the aims of the programme. Benchmark has been introduced to improve the standards of installation and commissioning of central heating systems in the UK and to encourage the regular servicing of all central heating systems to ensure safety and efficiency.
Please see installation and servicing guidelines.
For EIRE (Southern Ireland) it is necessary to complete a "Declaration of Conformity" to indicate compliance to I.S. 813. An example of this is given in the current edition of I.S. 813. In addition it is necessary to complete the "Benchmark" logbook.

⚠	This symbol indicates "Caution" and is placed next to all safety information. Strictly follow these instructions in order to avoid danger and damage to persons or property.
☞	This symbol calls attention to a note or important information, please read thouroughly.

⚠

- Read the warnings given in this manual thoroughly. They provide important information for safe installation, use and maintenance
- The instruction manual, by law must be left with the end user.
- If the appliance is sold or transferred to another owner or if the owner moves, leaving the appliance behind, always ensure that the manual is kept with the appliance for consultation by the new owner and /or installer.
- Incorrect installation or poor maintenance absolves the manufacturer from all liability for damage to persons and property.
- Installation and maintenance must be carried out in accordance with current legislation, according to the manufacturer's instructions and by qualified corgi registered engineer.
- Before service or maintenance work is carried out isolate the appliance from the mains electricity supply.
- In the event of malfunction or faulty operation, isolate the appliance. Do not attempt to repair or carry out any other operation on the appliance directly. Contact Ferroli or a qualified engineer only.
- Repairs or the replacement of components must be carried out exclusively by qualified personnel using original spare parts only. Failure to adhere to the above may compromise the safety of the appliance.
- To guarantee efficient operation, the appliance must be serviced once a year by a Corgi registered engineer.
- The appliance may not be used for purposes other than those for which it was explicitly designed.
- Incorrect installation and use or failure to follow the instructions provided by the manufacturer absolve the manufacturer from all liability for damage.
- After unpacking, check that the contents are correct and undamaged.
- Keep packing out of reach of children as it could be potentially hazardous.
- To clean external parts, use a damp cloth moistened with soapy water if necessary. Avoid using abrasive cleaning products and solvents.

Declaration of conformity

CE

Manufacturer: FERROLI S.p.A.
Address: Via Ritonda 78/a 37047 San Bonifacio VR Italy
declares that this unit complies with the following EU directives:

- Gas Appliance Directive 90/396
- Efficiency Directive 92/42
- Low Voltage Directive 73/23 (amended by 93/68)
- Electromagnetic Compatibility Directive 89/336 (amended by 93/68)

President and Legal Representative
Cav. del Lavoro
Dante Ferroli

1. Operating instructions 4
1.1 Introduction 4
1.2 Control panel 5
1.3 Turning on and off 6
1.4 Adjustments 6
1.5 Maintenance 8
1.6 Faults 8

2. Installation 9
2.1 General Instructions 9
2.2 Boiler location 10
2.3 Boiler water connections 12
2.4 Connection to the gas system 14
2.5 Electrical Connections 14
2.6 Flue System 17

3. Service and maintenance 24
3.1 Adjustments 24
3.2 Initial start-up 26
3.3 Maintenance 27
3.4 Troubleshooting 29

4 Technical characteristics and data 30
4.1 Dimensions and connections 30
4.2 General view and main components 31
4.3 Hydraulic diagram 32
4.4 Technical data table 33
4.5 Diagrams 34
4.6 Time Clock (optional) 35
4.7 Wiring diagram 36

Benchmark 37

1. OPERATING INSTRUCTIONS

1.1 Introduction

Dear Customer,

Thank you for choosing **DOMIcompact F 30 D**, a FERROLI wall-mounting boiler featuring advanced design and technology, high reliability and quality construction. Please read this manual carefully and keep it for future reference.

DOMIcompact F 30 D is a high-efficiency non condensing appliance for heating and hot water production running on natural or liquefied petroleum gas (configurable at the time of installation) and regulated by an advanced microprocessor control system.

The boiler shell consists of a primary copper laminar heat exchanger and burner equipped with electronic ignition and ionization flame control.

The boiler is totally room sealed from the installation room: the air required for combustion is drawn from outside. The boiler also includes a fan, modulating gas valve, pump, expansion vessel, flow switch, safety valve, temperature sensors, a safety thermostat and a low water pressure switch.

Thanks to the microprocessor control and adjustment system with advanced self-diagnosis, unit operation is for the most part automatic. The power for heating is automatically governed by the control system combined with the room thermostat (not supplied). The power for hot water is automatically and continually governed to ensure a fast delivery and comfort under all operating conditions.

The user only has to set the temperature desired inside the home (by means of an optional room thermostat or remote control, which is required under the building regulations 2002) or regulate the temperature of the system, and set the desired outlet temperature for the hot water. The adjustment and control system will provide optimum operation throughout the year.

The display continuously provides information on the unit's operating status and it is possible to obtain additional information on the sensor temperatures, set-points, etc, or configure them. Any operating problems associated with the boiler are immediately signalled by the display and, if possible, corrected automatically.

1.2 Control panel

The control panel is composed of a multi-function button, two knobs and a display.

Key

1 Heating temperature adjustment and Summer/Winter/ switch off control
2 Hot water temperature adjustment and switch off control
3 Multi-function button (ECO/RESET/TEST)
4 Temperature display
During operation or standby in heating mode, it displays the temperature of the heating sensor. During hot water operation, it displays the temperature of the hot water sensor.
5 Heating demand symbol
Appears during heating operation or when adjusting the heating set-point temperature
6 Flame symbol
Appears when the burner is on
7 ECO symbol
ECO is displayed when the Economy function is on
8 Hot water demand symbol
Appears during hot water operation or when adjusting the hot water set-point temperature

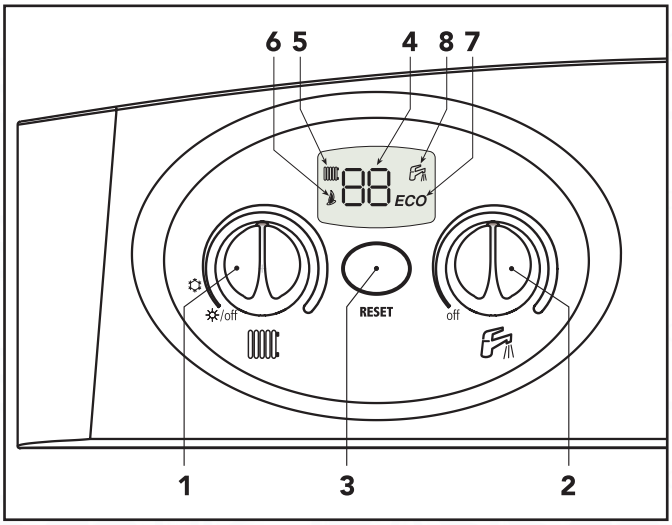

Fig. 1

Information during operation

During normal operation, the boiler diagnostics display the running information or boiler status on the control panel (Fig.1).see below.

Display	Type of operation
--	Boiler off (Frost protection active)
28	Boiler on stand-by (No demand from heating or Hot water)
8 ECO	Boiler on stand-by / ECO
69	Heating operation (burner on) (Displays heating flow temperature)
45 ECO	Hot tap water operation (burner on) (Displays Hot water temperature)
F1	Fault codes (See chap. 1.6 or 3.0) (Displays relevant fault code)
80	TEST mode operation (burner on) (For comissioning purposes only)

1.3 Turning on and off

Ignition

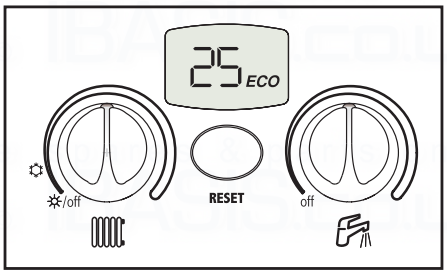

- Open the gas isolation valve on the boiler.
- Purge the air from the pipe work to the gas valve.
- Turn on the 3amp electrical switch or insert the plug to the boiler.
- Turn the heating and hot water control knobs onto their required temperatures (see par. 1.4).
- The boiler is now ready to function automatically whenever hot water is drawn or both the time clock and room thermostat call for heating.

Turning off

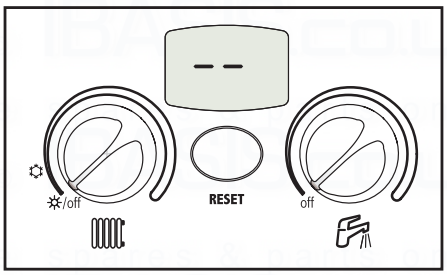

Turn the knobs (ref. 1 and 2 Fig. 1) onto minimum.

If the boiler is turned off this way, then the P.C.B is still powered.

Hot water and heating operation are disabled, the display shows [--]; but the frost protection function remains active

⚠ The frost protection will not work if the electricity and/or gas supply to the unit are cut off. To avoid damage caused by freezing during long shutdowns in winter, it is advisable to drain all water from the boiler, the tap water and the system water; or drain off just the tap water and add a suitable antifreeze to the heating system, as prescribed in chap. 2.3.

1.4 Adjustments

Summer/winter Switchover

Depending on the position of the control knobs "1" and "2" it is possible to switch off the boiler unit, switch between summer and winter operation or turn off the domestic hot water .

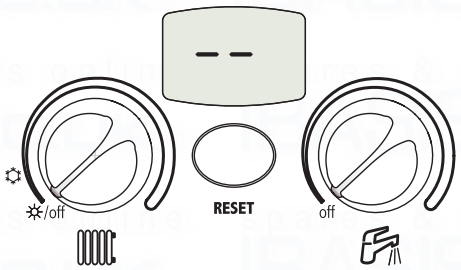

Boiler off

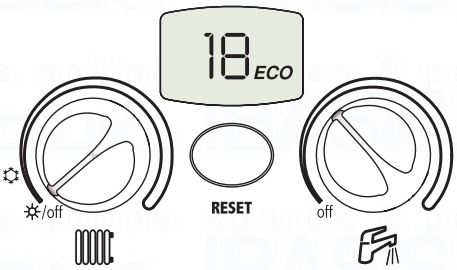

Boiler in Summer operation
(only hot water production is active)

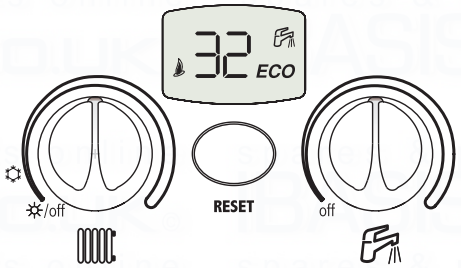

Boiler in Winter operation
(Display indicates hot water demand)

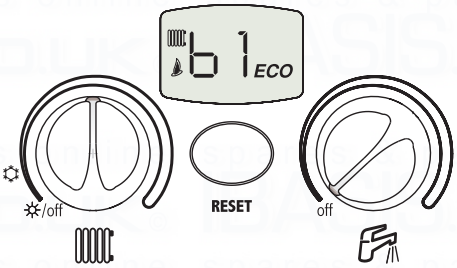

Boiler with only heating on and hot water off (Display indicates heating demand)

Switching off the boiler. Switching between summer and winter operation has priority over the heating only time control (optional) when this is connected to the boiler.

C.H. temperature setting

To set the system delivery temperature, turn the knob (ref. 1 - Fig. 1).

It can vary from a minimum of 30 °C to a maximum of 85°C; however, it is advisable not to operate the boiler below 45 °C. When the knob is turned the display lights up, the radiator symbol flashes and the temperature displayed will be the temperature actually set. On completing this operation, the display will stay on for another 5 seconds and then go back to the actual operating temperature providing there is a demand.

Domestic Hot water temperature adjustment

To set the tap water temperature, turn the knob (ref. 2 - Fig. 1).

It can vary from a minimum of 40 °C to a maximum of 55 °C. When the knob is turned the display lights up, the tap symbol flashes and the temperature displayed will be the temperature actually set. On completing this operation, the display will stay on for another 5 seconds to then go back to the actual operating temperature providing there is a demand.

If the boiler is connected to the optional remote open therm control, the above adjustments (system and hot water temperature) can only be made with the remote control.

ECO/COMFORT selection

The unit is equipped with a special internal device that ensures a high hot-water delivery speed and excellent user comfort. When comfort mode is active the water in the boiler is maintained at a pre-determined temperature, which means that hot water is available at the boiler outlet as soon as a tap is opened, ie with no waiting.

The user can turn the device off (ECO mode) by pressing the multi-function button for 2 seconds with the boiler on standby. In ECO mode the display shows the relevant symbol. To turn on COMFORT mode, press the multi-function button again for 2 seconds, the ECO symbol will vanish from the display.

TEST MODE selection

Pressing the multi-function button 3 times in 3 seconds turns on TEST mode (the heating and hot water symbols flash simultaneously - see par. 3.1). If TEST mode is turned on by accident, press the button 3 times in 3 seconds again to exit (Test time 15 minutes unless cancelled early).

1.5 Maintenance

It is strongly recommended to carry out annual maintenance on the boiler and the heating system. Please refer to the "maintenance" section in this manual.

The casing, the control panel and the aesthetic parts of the boiler can be cleaned using a soft and damp cloth.

Do not use abrasives or solvents.

1.6 Faults

The boiler is equipped with an advanced self-diagnosis system that signals any faults on the display. Some faults (from F1 to F3) cause a boiler shutdown. In this case, operation must be reset manually by pressing the multi-function button (RESET) for 1 second

Other faults (from F5 to F37) cause temporary shutdowns that are automatically reset as soon as the value causing the fault comes back within the boiler's normal working range.

Listed below are some anomalies that can be caused by simple, user-solvable problems.

If the problem remains after two attempts at resetting, contact the Ferroli Service Centre.

For other faults, refer to section 3.4 "Troubleshooting".

Display code	Fault	Cure
F1	Boiler shutdown	Make sure that the gas cocks ahead of the boiler and on the meter are open. Press the multi-function button (for 1 second) (fig.1) In case of repeated shutdowns, contact the nearest assistance centre.
F37	Low system pressure	Fill the system to 1-1.5 bar using the external filling loop normally fitted under the boiler by your installer.

☞ Before calling a Ferroli service engineer, check that the problem is not due to there being no gas or electricity, or low system pressure.

2. INSTALLATION

2.1 General Instructions

This device must only be used for the purpose for which it is specially designed. This unit is designed to heat water to a temperature below boiling point and must be connected to a heating system and/or a water supply system for domestic use, compatible with its performance, characteristics and its heating capacity. Any other use is considered improper.

BOILER INSTALLATION MUST ONLY BE PERFORMED BY QUALIFIED PERSONNEL, IN ACCORDANCE WITH ALL THE INSTRUCTIONS GIVEN IN THIS TECHNICAL MANUAL, THE PROVISIONS OF CURRENT LAW, THE RECOMENDATION OF BS STANDARDS, ANY LOCAL REGULATIONS AND THE RULES OF COMPETENT WORKMANSHIP.

In IE, the installation must be carried out by a Competent Person and installed in accordance with the current edition of I.S. 813 "Domestic Gas Installations", the current Building Regulations and reference should be made to the current ETCI rules for electrical installation.

Incorrect installation can cause damage or physical injury for which the manufacturer declines any responsibility.

This appliance must be installed strictly in accordance with these instructions and regulations:

The Gas Safety Regulations (Installations & Use).

The Local Building Regulations.

The Building Regulations (Part L).

The Buildings Standards (Scotland - Consolidated) Regulations.

British Standards Codes of Practice:

B.S. 5440 Part 1 Flues
B.S. 5440 Part 2 Air supply
B.S. 5449 FORCED CIRCULATION HOT WATER SYSTEMS
B.S. 6798 INSTALLATION OF GAS FIRED HOT WATER BOILERS
B.S. 6891 GAS INSTALLATIONS
B.S. 7671 IEE WIRING REGULATIONS
B.S. 4814 SPECIFICATION FOR EXPANSION VESSELS
B.S. 5482 INSTALLATION OF LPG
B.S. 3632 RESIDENTIAL PARK HOMES
B.S. 7593 TREATMENT OF WATER IN DOMESTIC HOT WATER CENTRAL HEATING SYSTEMS
B.S. 5546 INSTALLATION OF HOT WATER SUPPLIES FOR DOMESTIC PURPOSES
I.S. 813 DOMESTIC GAS INSTALLATIONS (EIRE ONLY)

Local Water Bye Laws
B.S. 5955-8 PLASTIC PIPEWORK INSTALLATION

For Northern Ireland the rules in force apply

2.2 Boiler location

The boilers combustion chamber is sealed off from the installation room. The installation room must be sufficiently well ventilated to prevent any dangerous conditions from forming in the event of even slight gas leakage. This safety standard is required by the EEC Directive no. 90/396 for all gas units, including those with a so-called sealed chamber.

Therefore the place of installation must be free of dust, flammable materials or objects or corrosive gases. The room must be dry and not subject to freezing.

The boiler is design to be installed on a solid wall. The wall fixing must ensure a stable and effective support for the appliance, using the bracket and fixings supplied.

If the unit is enclosed in a cupboard or mounted alongside, there must be space for normal maintenance work. Fig. 2 and tab. 1 give the minimum clearances to leave around the unit.

This appliance does not require compartment ventilation for combustion purposes

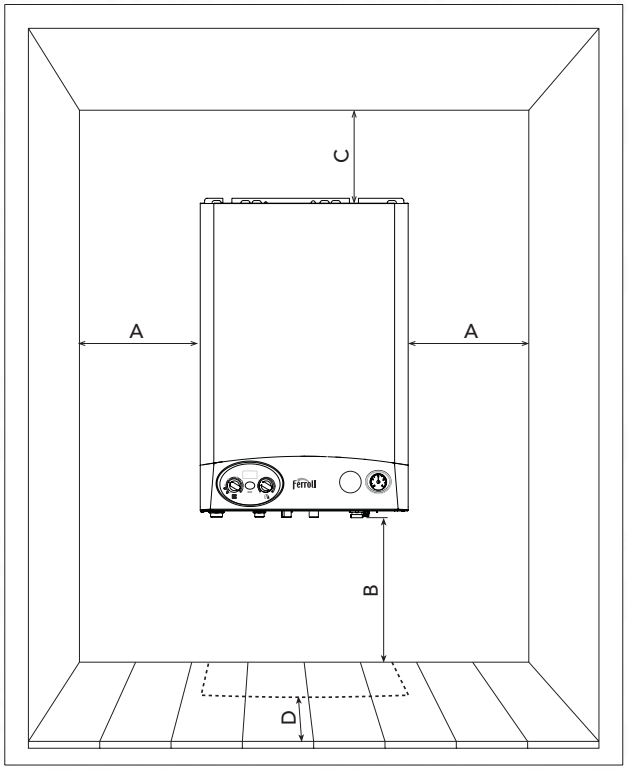

fig. 2

Table 1	Minimum
A	5 cm
B	20 cm
C	20 cm
D	60 cm (via an openable panel)

Drilling Template

Select suitable mounting position for boiler, using the template mark flue outlet and boiler mounting points. Drill two 10mm holes 70mm deep to accept the wall plugs. Fit the supplied wall plugs on the left and right side drill and fit the special wall plug in the middle (fig. 3). Fix the wall bracket to the wall using standard lock nuts (M8) on both sides. Using a Core drill cut a hole 10-20 mm larger than the flue diameter for the flue as detailed on page 17.

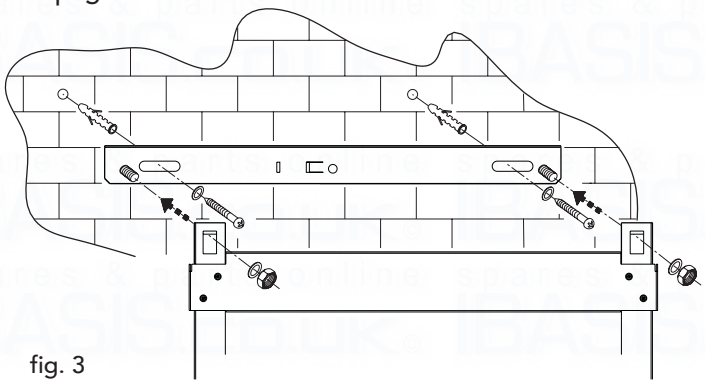

fig. 3

Make Up Water

Provision must be made for replacing water lost from the sealed system. Reference should be made to BS6798, for methods of filling and making up sealed systems. There must be no direct connection between the boiler's central heating system and the mains water supply. The use of mains water to charge and pressurise the system directly, is conditional upon the Local Water Byelaws. Again any such connection must be disconnected after use. The temporary filling loop (Not supplied) is shown in fig. 5. Ensure the filling point is on the return pipe to the boiler.

Attention - is drawn to the Local Water Byelaws.

Fittings manufactured from duplex (alpha-beta) brass are not acceptable for underground use and certain water undertakings will not accept their use above ground.

Ensure all pipework is adequately supported

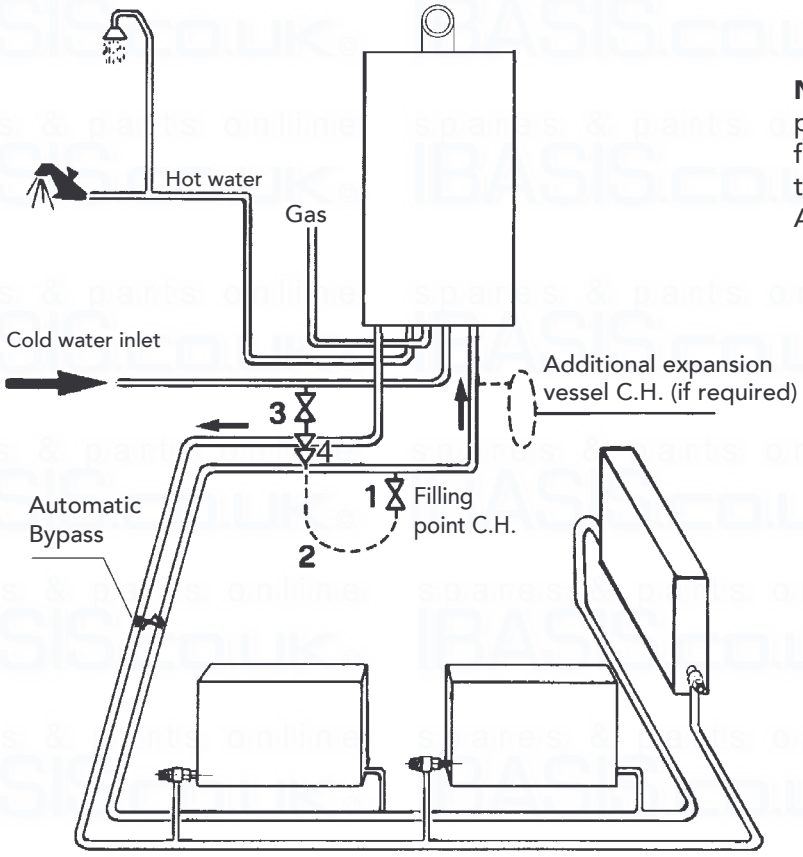

NOTE: An automatic bypass capable of passing 6 ltrs per minute must be fitted as far as possible from the boiler if thermostatic radiator valves are fitted thoughout. As per the building regulations part 'L'

fig. 4

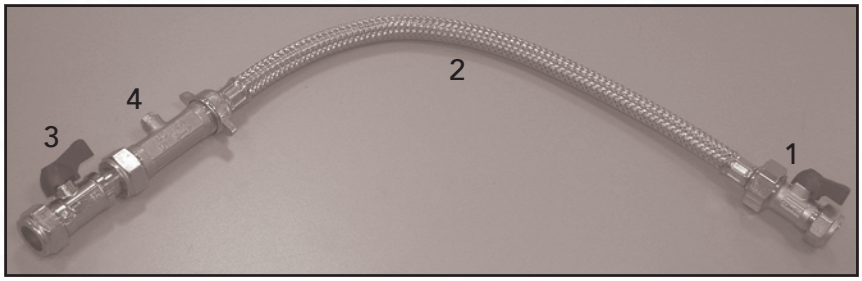

Key

1 Filling point C.H 15mm isolation valve.
2 Temporary flexible connection
3 Cold water supply 15mm isolation valve
4 Double check valve

fig. 5

2.3 Boiler water connections

The heating capacity of the unit should be previously established by calculating the building's heat requirement according to current regulations. For efficient operation and long life of the boiler, the plumbing system must be well designed and always complete with all those accessories that guarantee regular operation and running, ie room thermostat, trv's and automatic bypass etc.

If the flow and return pipes follow a path where air pockets could form in certain places, it is essential to install air vent valves at these points. Also, install a type "A" drain cocks at the lowest points in the system to allow its complete draining.when required The temperature differential between the flow manifold and the return to the boiler should not exceed 20° C.

A minimum flow of 6 litres/min is requied through the heat exchanger, it is therefore essential to fit an automatic bypass a min of 3 metres away from the appliance, This should be calibrated on site.

⚠ Do not use the water system pipes to earth electrical appliances.

Before installation, carefully flush all the pipes of the heating system to remove residues or impurities that could affect the unit's efficient operation (BS 7593 Building regs Doc L).

Make the connections to the appliance as shown in fig. 6.

Key

1 Heating system flow Ø 3/4"
2 Hot water outlet Ø 1/2"
3 Gas inlet 1/2"
4 Tap water inlet Ø 1/2"
5 Heating system return Ø 3/4"

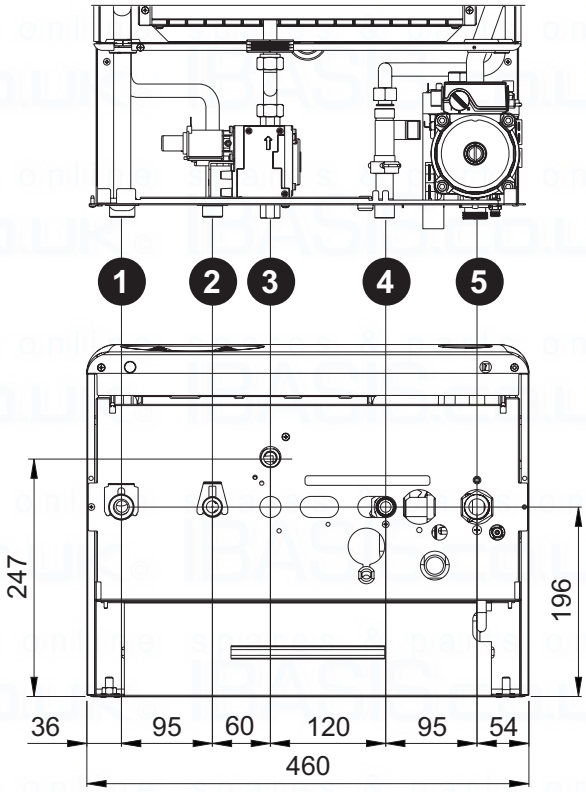

fig. 6

It is essential to install the isolation valves supplied between the boiler and heating system, allowing the boiler to be isolated from the system if necessary.

⚠ The safety valve outlet must be connected to a 15 mm pipe to allow safe discharge to the outside ground in the event of over-pressure in the heating circuit. If this is not done, and the drain valve opens and floods the room, the boiler manufacturer is not to be held responsible. The pipework must have a continuous fall from the boiler, The outlet should face back against the outer brickwork or building face to prevent harm or injury from hot water discharging in the event of an over-pressuried system.
Make the boiler connection in such a way that its internal pipework is free of stress.

If a check valve is installed on the tap water circuit (where applicable), it is necessary to mount a safety valve between the boiler and this circuit (check valve minimum 3 metres from boiler).

The connecting kits shown in fig. 7 are supplied as standard.

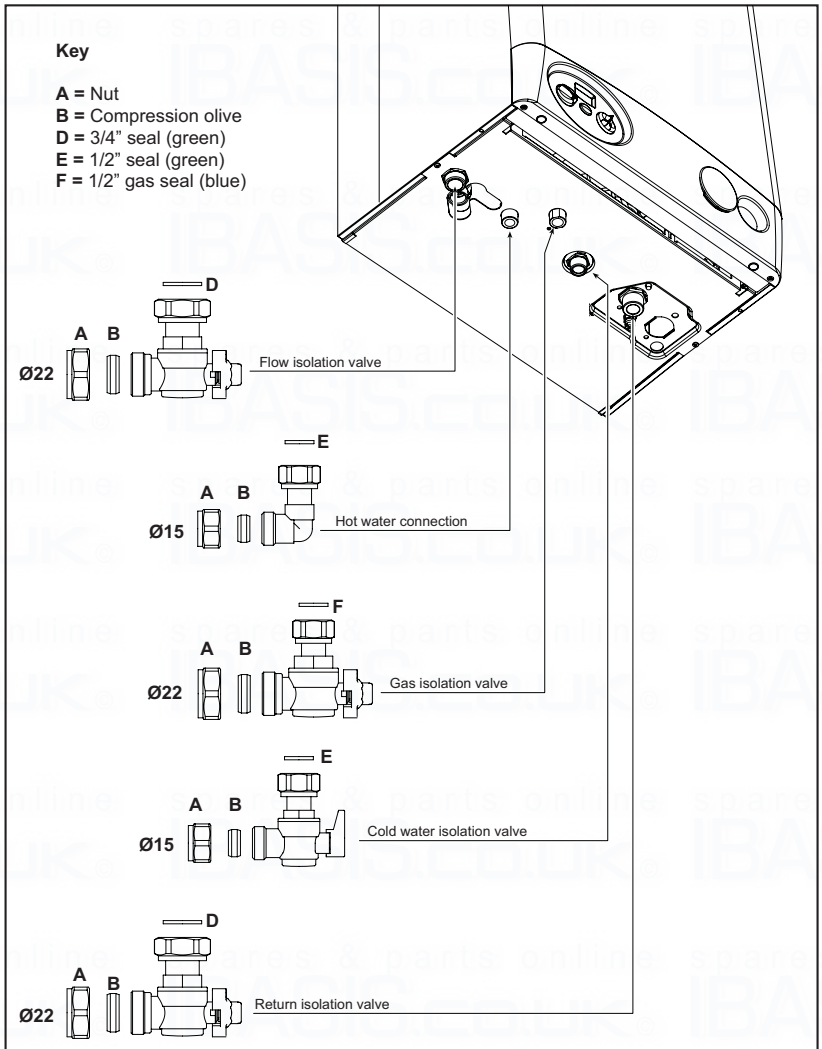

fig. 7

Water treatment

When treatment is used ferroli limited only recommend the use of proprietary Brands, such as Fernox or Sentinel water treatment products, which must be used in accordance with the manufacturers instructions,

For further information contact:

Fernox Manufacturing Co. LTD. Cookson Electronics, Forsyth Road Sheerwater,Woking,Surrey GU21 5RZ Tel: 0870 8700362	Sentinel Performance Solutions The Heath Business & Technical Park Runcorn Cheshire WA7 4QX Tel: 01928 588 331

Note - When the boiler is installed with an existing or new system any unsuitable additives or system debris must be removed by thorough chemical cleansing. All systems should be cleansed according to B.S. 7593.

Note - It is important that the correct concentration of the water treatment product is maintained in accordance with the manufacturers instructions.

Note - In hard water areas it may be necessary to install a scale reducer prior to the boiler on the cold water inlet.

2.4 Connection to the gas system

If necessary the local Gas supplier should be consulted, at the installation planning stage, in order to establish the availability of an adequate supply of gas.

An existing service pipe must not be used whitout prior consultation with the local Gas supplier.

A gas meter can only be connected by the Local Gas supplier, or by a Local Gas suppliers Contractor.

Installation pipes should be fitted in accordance with BS6891.

Appliance inlet working pressure must be 20 mbar MINIMUM, for NG and 37 mbar minimum for propane.

Do not use pipes of a smaller diameter than the combination boiler inlet gas isolation valve (22 mm).

The complete installation must be tested for gas soundness and purged as described in BS6891. All pipework must be adquately supported. An isolating gas valve is provided and must be fitted on the boiler gas inlet. Please wait 10 minutes when lighting from cold before checking the gas rate, this will ensure thermal equilibrium.

2.5 Electrical Connections

The unit must be installed in conformity with current national and local regulations inc 16th Edition & B.S 7671.

Connection to the electrical supply.

The boiler must be connected to a single-phase, 230 Volt-50 Hz electrical supply.

The unit's electrical safety is only guaranteed when correctly connected to an efficient earthing system installed according to current safety standards and checked by a professionally qualified person. The manufacturer is not responsible for any damage caused by failure to earth the system. Also make sure that the electrical system is adequate for the maximum power absorbed by the unit, as specified on the boiler dataplate, in particular ensuring that the cross-sectional area of the electrical cables are suitable for the power absorbed by the unit.

The boiler is prewired and provided with a cable for connection to the electrical supply The prewired cable must be connected to the supply with a permanent connection and equipped with a double pole switch which contacts have a minimum opening of at least 3 mm, and fused at max. 3A between the boiler and the line. It is important to check the polarities (LIVE: brown wire / NEUTRAL: blue wire / EARTH: yellow-green wire) and ensure they are correctly connected to the corresponding terminals on the electrical supply.

The user must never change the boilers power cable. If the cable gets damaged, switch off the unit and have it changed only by professionally qualified personnel. If changing the electric power cable, use only "HAR H05 VV-F" 3x0.75 mm^2 cable with a maximum outside diameter of 8 mm.

5 Core cable must not be used to replace the existing 3 core!

Integral clock installation

1 Unscrew the two screws "**A**" (Fig. 8a).
2 Lower the instrument panel (Fig. 8b).
3 Turn the instrument panel (Fig. 8c).
4 Open the instrument panel "**B**" (Fig. 8c), mount the clock into the facia panel using the two screws provided.
5 Take the cable with blue and brown wires and the "JST" connector: connect the loose spades to clock terminal 1 & 2 (Fig. 8e).
6 Connect the plug end of the cable to terminal X5 of the MF08FA.1 board.
7 Remove one cable from the terminal block (Fig. 8d).
8 Connect it to the cable "**C**" of the Fig. 8e.
9 Connect the cable "**D**" in the free space of terminal block (Fig. 8d).
10 Replace everything in reverse order.

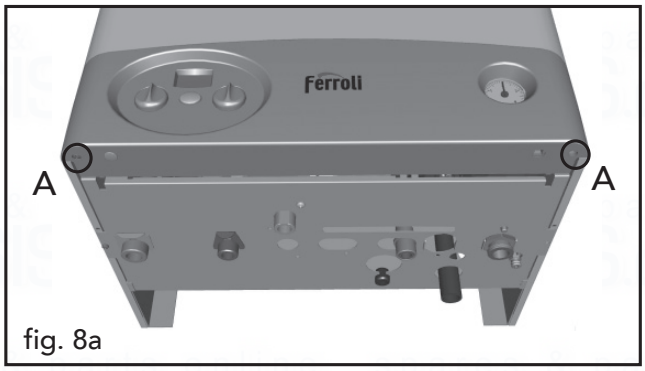

fig. 8a

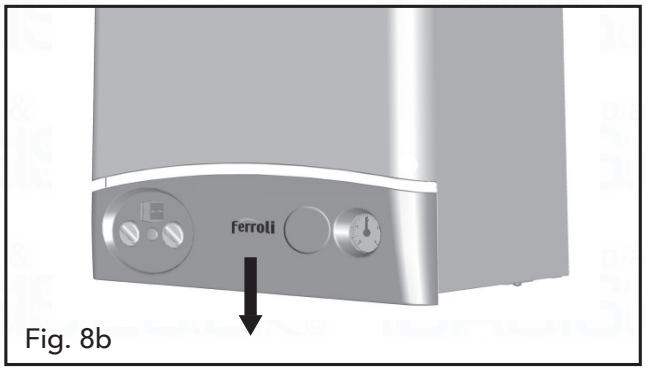

Fig. 8b

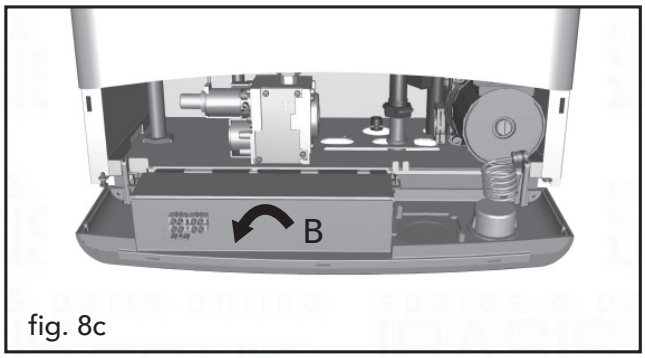

fig. 8c

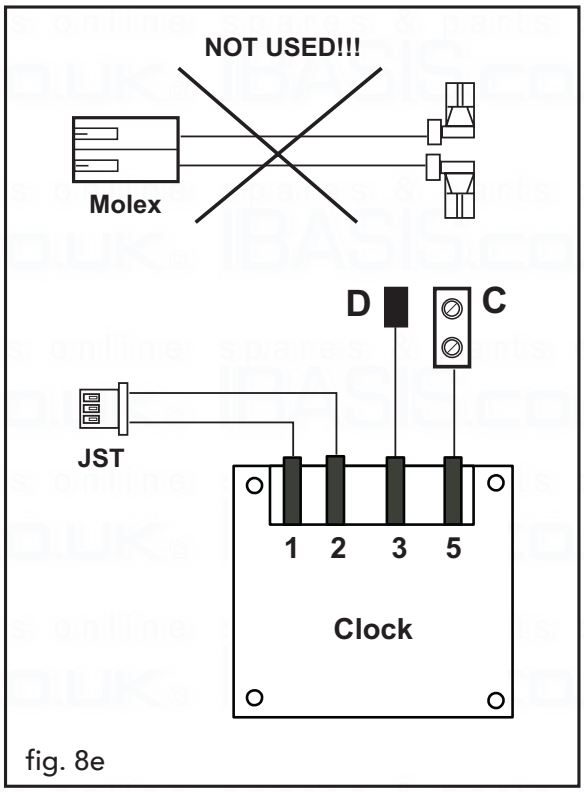

fig. 8e

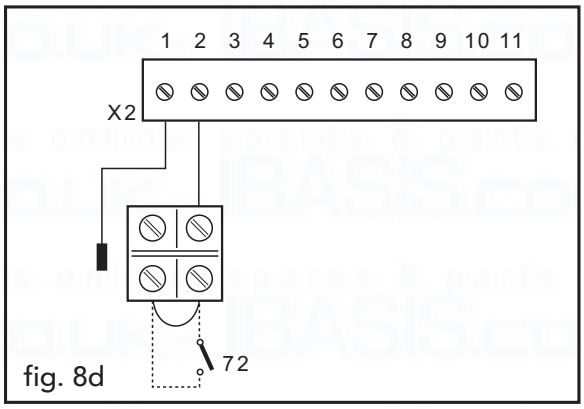

fig. 8d

Access to the electrical terminal block

To access the terminal block where the room thermostat (Low voltage) or the remote timer control is to be connected, carry out the following operations:

1 Unscrew the two screws "**A**" (Fig. 9a).
2 Lower the instrument panel (Fig. 9b).
3 Turn the instrument panel (Fig. 9c).
You can now access the terminal block "B" (Fig. 9c)

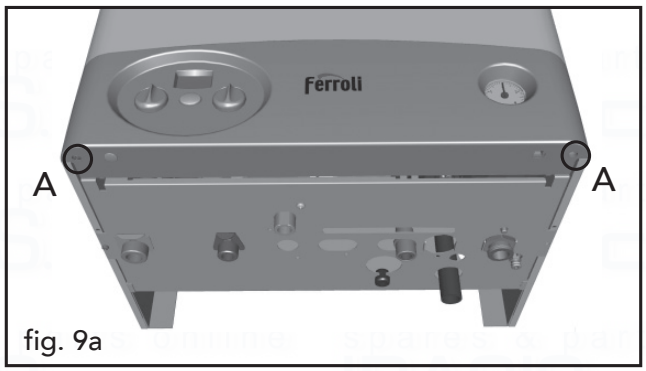

fig. 9a

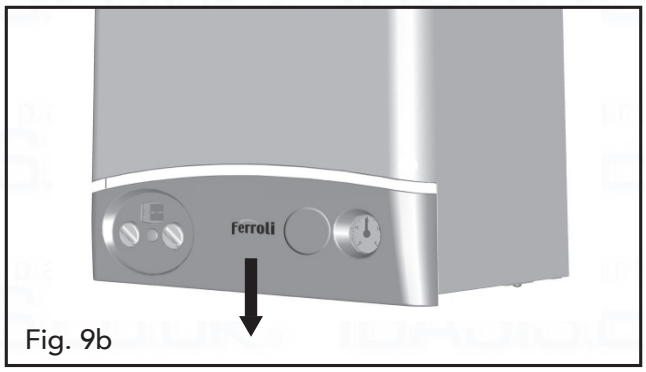

Fig. 9b

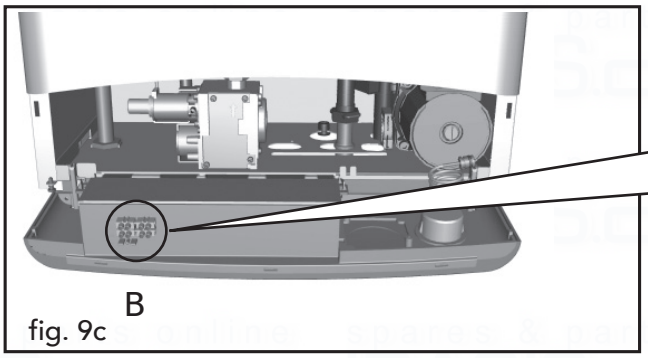

fig. 9c

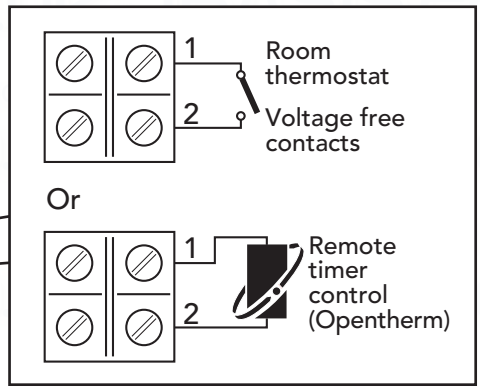

2.6 Flue System

The unit is "type C" with an airtight chamber and forced draught, the air inlet and flue outlet must be connected to one of the following flue system. With the aid of the tables and methods of calculation indicated, before commencing installation, it is first necessary to check that the flue ducts do not exceed the maximum permissible lengths. The current standards and local regulations must be observed.

This C-type unit must be installed using the flue components supplied by FERROLI S.p.A. in accordance with UNI-CIG 7129/92. Failure to use them automatically forfeits all warranty and liability of FERROLI S.p.A.

Restrictors

Boiler operation requires fitting the restrictors supplied with the unit as instructed in the following tables.

Choosing the restrictors using a concentric system

Type	Length up to:	Restrictor to use
Concentric 60/100	1 bend + 1 metre	45 mm
	1 bend + 3 metres	No restrictor
Concentric 80/125	1 bend + 3 metres	45 mm
	1 bend + 5 metres	No restrictor

Choosing the restrictor using two pipe system

Pipe length calculated in linear metres		Restrictor to use
Min	Max	
0 m	15 m	45 mm
15 m	35 m	47 mm
35 m	45 m	50 mm
45 m	50 m	No restrictor

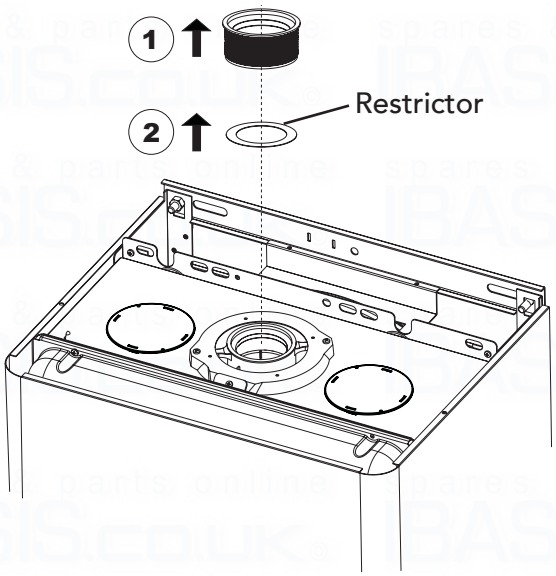

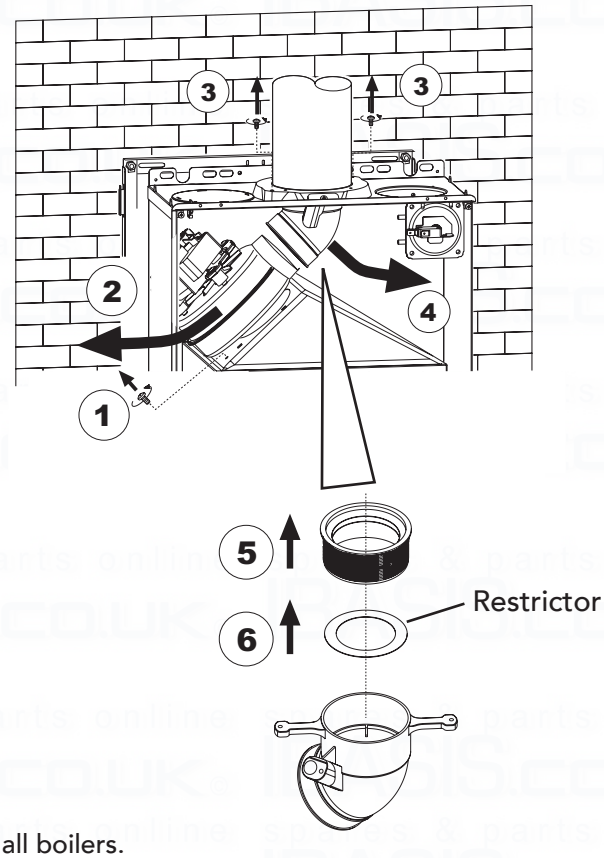

The restrictor Ø45 is fitted as standard on all boilers.
Before inserting the flue outlet pipe, it is therefore necessary to check there is the right restrictor (when it is to be used) and that it is correctly positioned.

Connection with concentric flue

The unit can be connected to a concentric flue with a horizontal or vertical flue as shown on the following drawings. Numerous accessories are available on request to meet the various installation requirements. Please refer to the flue accessory catalogue or the price list.

Rear Outlet

Side view

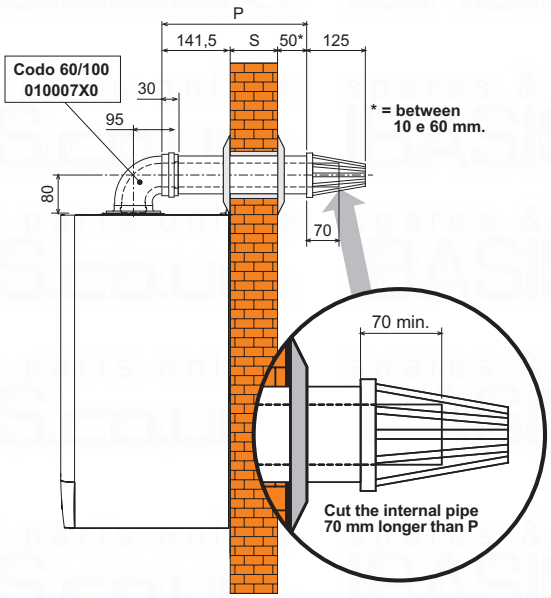

P = S + 191,5 mm

View from above

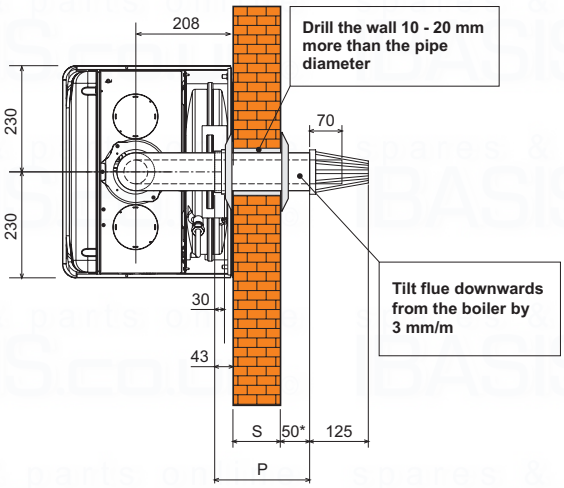

Fig. 10a

Side Outlet

Front view

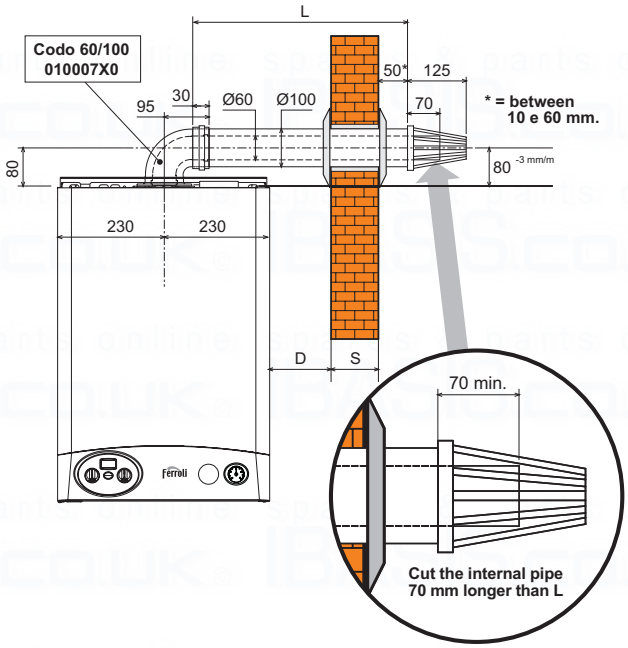

L = S + D + 215 mm

View from above

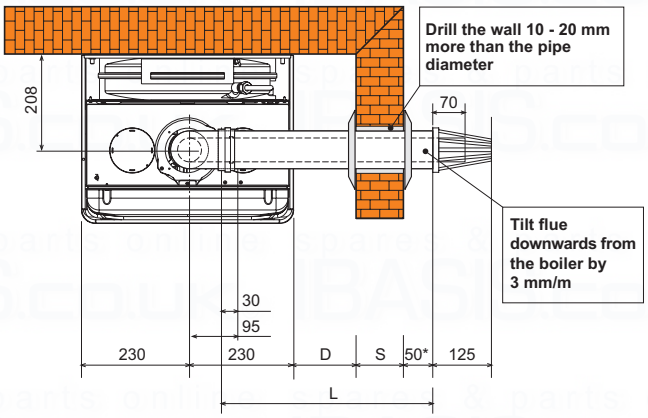

Fig. 10b

The total length in linear metres of the flue pipe must not exceed the maximum lengths stated in the following table, considering that each bend gives rise to the stated reduction. For example, a duct D= 60/100 composed of 1 bend of 90° +1 horizontal metre + 2 bends of 45° + 1 horizontal metre has a total equivalent length of 4 metres.

	Ø mm 60/100	Ø mm 80/125
Maximum permissible flue length horizontal and vertical	4 m	5 m

Reduction factors for bends	
Concentric bend at 90° - Ø 60/100 mm	1 m
Concentric bend at 45° - Ø 60/100 mm	0.5 m
Concentric bend at 90° - Ø 80/125 mm	0.5 m
Concentric bend at 45° - Ø 80/125 mm	0.25 m

For the installation:

1. Define the position for installing the unit.
2. Drill the wall for the air/flue pipe outlet according to the references stated in the figures, considering that the horizontal sections of piping must have a gradient of approximately 3 mm per metre of length downwards to prevent any rainwater getting into the boiler.
3. Make a hole of diameter 10 - 20 mm greater than the nominal diameter of the flue pipe used to facilitate insertion.
4. If necessary, cut the end pipe to size, considering that the external pipe must protrude from the wall by between 10 and 60 mm (Fig. 10a and 10b). Eliminate the cutting burrs.
5. Connect the ducts to the boiler, positioning the gaskets correctly and seal the wall coupling points with special sleeves.

Vertical Outlet

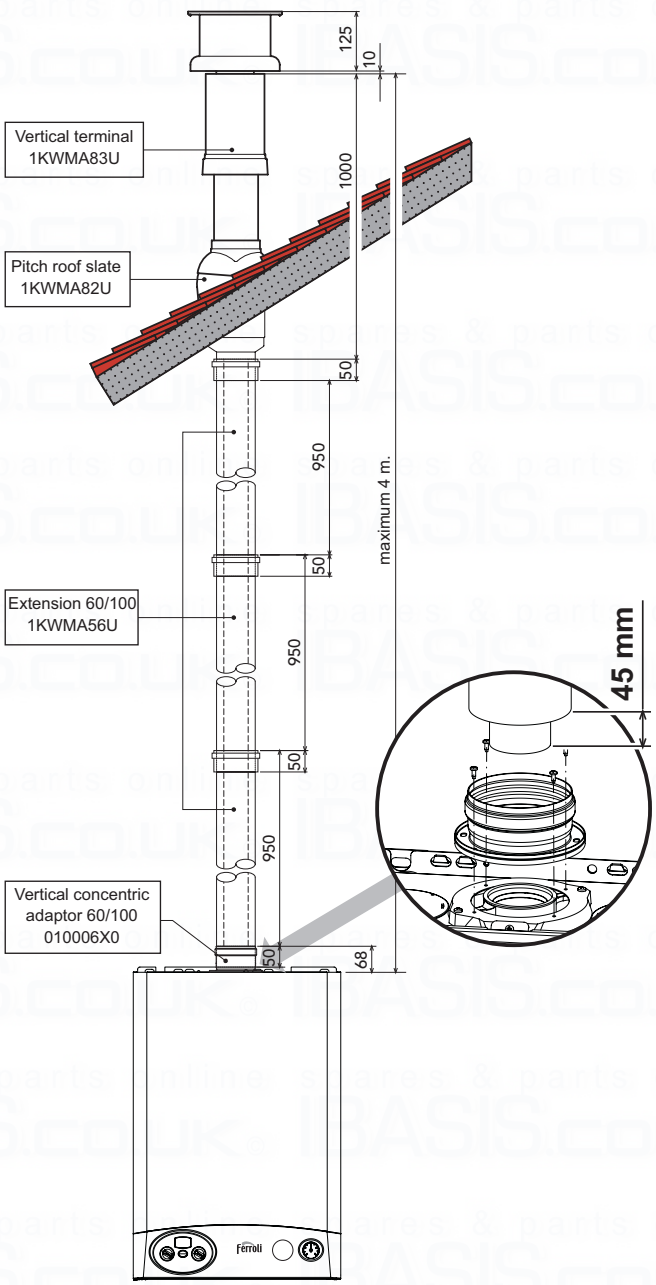

Fig. 10c

Connection with two pipe system

The unit can be connected to a system of separate air/flue ducts for a vertical or horizontal outlet as shown on the drawings 11 - 12 alongside. Numerous accessories are available on request to meet the various installation requirements. The components used most frequently are stated in tables. Please refer to the flue accessory catalogue or the price list for additional components.

To check you do not exceed the maximum permissible duct length, it is necessary to make a simple calculation before installation:

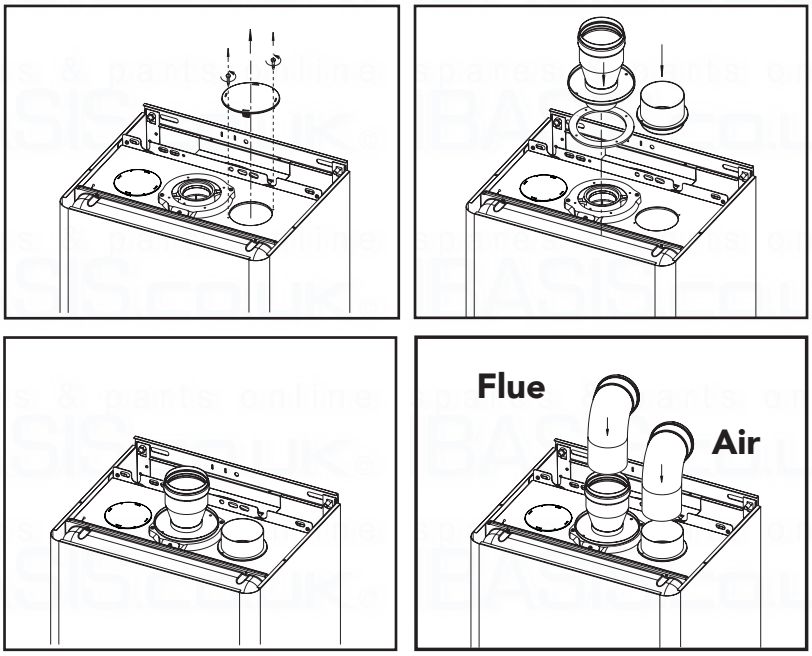

Fig. 11

1. For each component, tables provide an "equivalent load loss in linear metres", depending on the position of installation of the component (with air inlet or flue extraction, vertical or horizontal).
   The loss is called "equivalent in linear metres" since it is compared to the loss of one metre of duct in air inlet (defined as equal to 1). For example, a bend at 90° of Ø80 in flue extraction has an equivalent loss of 2.5 linear metres, i.e. it has a loss equal to that of 2.5 linear metres of duct in air inlet.

2. After completely defining the layout of the system of split flues, add up the losses in equivalent metres, depending on the installation position, of all the components and accessories in the system.

3. Check that the total calculated loss is less than or equal to **50** equivalent metres, i.e. the maximum permissible for this model of boiler.

Ref.	No. Pieces	Description	Equivalent loss
1	1	Air bend Ø80	1,5 m
2	1	Horizontal air pipe Ø80	1,0 m
3	1	Air inlet terminal	2,0 m
4	1	Condensate collection cup coupling	3,0 m
5	38	Vertical flue pipe Ø80	38,0 m
6	1	Vertical terminal	4,0 m
		Total	**49,5 m**

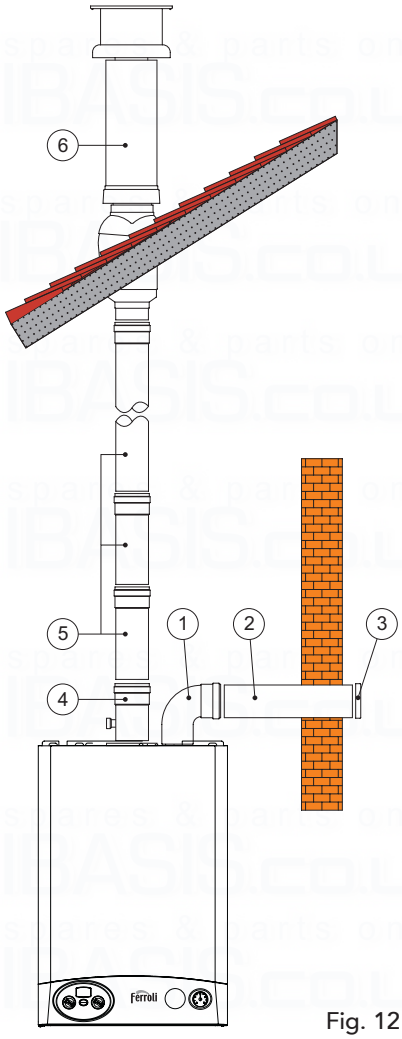

Fig. 12

Table of pipe and accessory losses

	Description		Equivalent losses in metres (linear) Air Vertical	Air Horizontal	Flue Vertical	Flue Horizontal
Accessories Ø 80	Pipe Ø 80 male-female	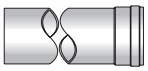				
		KWMA38A • 0,50 m	0,5	0,5	0,5	1
		KWMA83A • 1,00 m	1	1	1	2
	Bend 45° Ø 80 mm	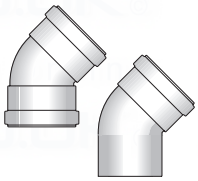 KWMA65A	1,2		2,2	
	Bend 90° Ø 80 mm male-female	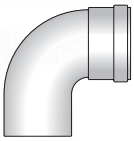 KWMA82A	1,5		2,5	
	Condensate collection cup coupling	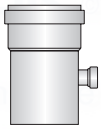 KWMA55U			3	

	Description		Equivalent losses in metres (linear) Air Vertical	Air Horizontal	Flue Vertical	Flue Horizontal
Accessories Ø 80	Horizontal flue terminal combustion Ø 80 mm	KWMA86A				5
	Horizontal air terminal Ø 80 mm	KWMA85A		2		
	Concentric vertical terminal	KWMA83U			4	
	Fume vertical terminal for two pipe system	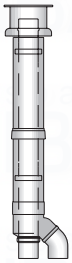 KWMA84U	12			

☞ The stated loss values refer to genuine Ferroli ducts and accessories.

Terminal Position

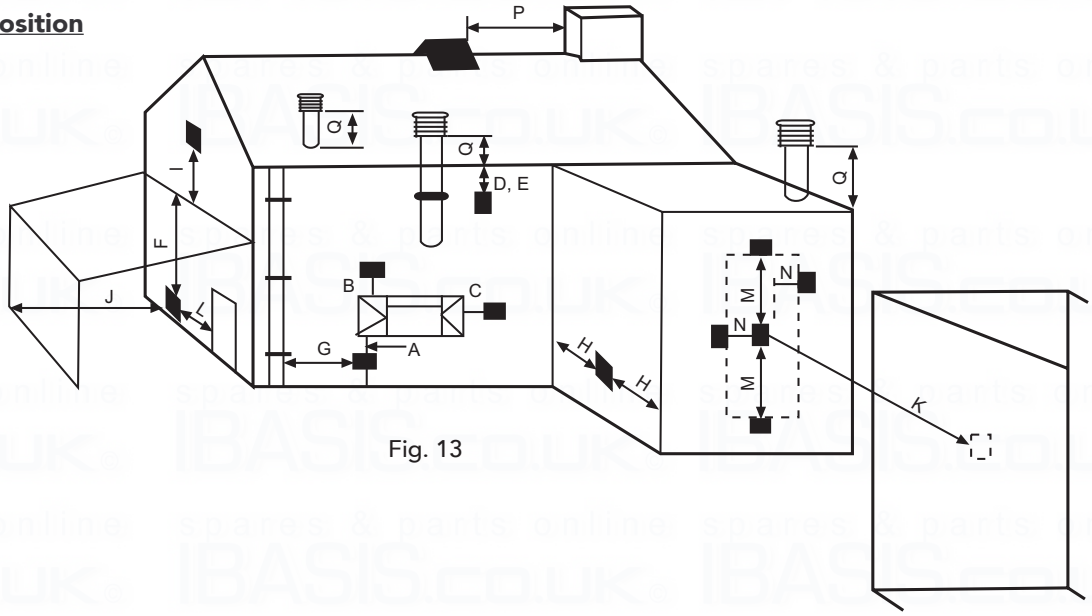

Fig. 13

Minimum Dimensions of Flue Terminal Positions		
A	Directly below an opening, air brick, opening windows, etc.	300mm
B	Above an opening, air brick, opening windows, etc.	300mm
C	Horizontally to an opening, air brick, opening windows, etc.	300mm
D	Below gutters, soil pipes or drain pipes	75mm
E	Below eaves	200mm
F	Below balconies or car port roof	200mm
G	From a vertical drain pipe or soil pipe	150mm
H	From an internal or external corner	100mm
I	Above ground roof or balcony level	300mm
J	From a surface facing the terminal	600mm
K	From a terminal facing the terminal	1200mm
L	From an opening in the car port (e.g. door, window) into the dwelling	1200mm
M	Vertically from a terminal on the same wall	1500mm
N	Horizontally from a terminal on the same wall	300mm
O	From the wall on which the terminal is mounted	N/A
P	From a vertical structure on the roof	150mm
Q	Above intersection with roof	300mm

NOTE

N/A = Not applicable

In addition, the terminal must not be nearer than 300mm to an opening in the building fabric formed for the purpose of accommodating a built-in element such as a window frame.

Connection to collective flues or single flues with natural draught

The UNI 10641 standard prescribes the design criteria and checking the internal dimensions of the collective flues and single flues with natural draught for units with a sealed chamber equipped with a fan in the combustion circuit.

If you are then going to connect the **Domicompact F 30 D Boiler** to a collective flue or a single flue with natural draught, the flue must be expressly designed by professionally qualified technical personnel in conformity with the UNI 10641 standard.

In particular, flues must have the following characteristics:

- Be sized according to the method of calculation stated in the standard
- Be airtight to the products of combustion, resistant to the fumes, heat and waterproof for the condensate
- Have a circular or quadrangular cross-section (some hydraulically equivalent sections are permissible), with a vertical progression and with no constrictions
- Have the ducts conveying the hot flue gases adequately distanced or isolated from combustible materials
- Be connected to just one unit per floor, for at most 6 units in all (8 if there is a compensation duct or opening)
- Have no mechanical suction devices in the main ducts
- Be at a lower pressure, all along their length, under conditions of stationary operation
- Have at their base a collection chamber for solid materials or condensation of at least 0.5 m, equipped with a metal door with an airtight closure.

3. SERVICE AND MAINTENANCE

3.1 Adjustments

All adjustment and conversion operations must be carried out by a Qualified and trained engineer such as a Ferroli Service engineer

FERROLI S.p.A. declines any responsibility for damage or physical injury caused by unqualified and unauthorised persons tampering with the device.

Gas supply conversion

The unit can function with either Natural Gas or LPG and is factory-set for use with one of the two gases, as clearly shown on the packing and on the unit's dataplate. Whenever a different gas to that for which the unit is preset has to be used, a conversion kit will be required, proceeding as follows:

1. Replace the injectors at the main burner, by inserting those specified in the technical data table in chart. 4, according to the type of gas used

2. Adjust the burner minimum and maximum pressures (ref.to page 34), setting the values given in the technical data chart for the type of gas used.

3. How to Adjust the parameter for the specific type of gas to be used:
   - turn the boiler onto standby
   - press the RESET button for 10 seconds
   - P1 will appear on the display
   - press the RESET button for 5 seconds
   - turn the hot water knob (ref. 2 - fig 1) onto "0" (for Natural Gas operation) or onto "1" (for LPG operation)
   - press the RESET button for 5 seconds
   - P2 will appear on the display
   - turn the heating knob (ref. 1 - fig 1) onto minimum and then onto maximum
   - the boiler will go back onto standby
   - turn the heating & hot water knobs onto the set temperatures.

4. Attach the sticker contained in the conversion kit, near the dataplate, as proof of the conversion.

Turning on TEST mode

To turn on TEST mode, press the multi-function button 3 times in 3 seconds.

The display will show the radiator and hot water symbols flashing, the current heating power, the ECO symbol (if ECONOMY mode is on) and the flame symbol.

To exit TEST mode, press the multi-function button 3 times in 3 seconds.

TEST mode turns off automatically after 15 minutes.

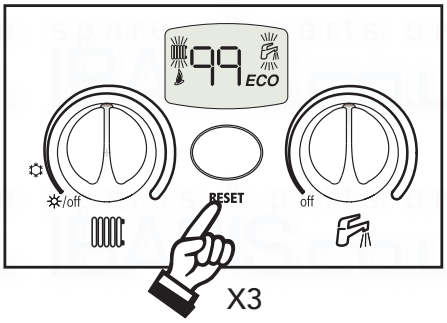

Adjusting burner pressure

Since this unit has flame modulation, there are two fixed pressure settings: the minimum and maximum, which must be as stated in the technical data chart according to the type of gas.

- Connect a suitable pressure gauge to pressure point "B" downstream from the gas valve, having loosened it first
- Disconnect the pressure compensation tube "H".
- Take off the protective cap "D".
- Run the boiler in TEST mode (press the multi-function button 3 times in 3 seconds):
  - TEST mode on: turn the heating knob (ref. 1 - fig 1) onto maximum.
- Adjust the maximum pressure with the screw "G", clockwise to increase it and anticlockwise to decrease it.
- Disconnect one of the two electrical connectors from the modureg "C" on the gas valve.
- Adjust the minimum pressure with the screw "E", clockwise to decrease it and anticlockwise to increase it.
- Reconnect the electrical connector disconnected from the modureg on the gas valve.
- Check that the maximum pressure has not changed.
- Reconnect the pressure compensation tube "H".
- Put the protective cap "D" back on.
- To end TEST mode, repeat the sequence for turning it on or wait 15 minutes
- Shut down the boiler
- Remove the pressure gauge
- Re-seal test point 'B'
- Re-light the boiler and check for gas leaks using a suitable "Leak detection fluid"

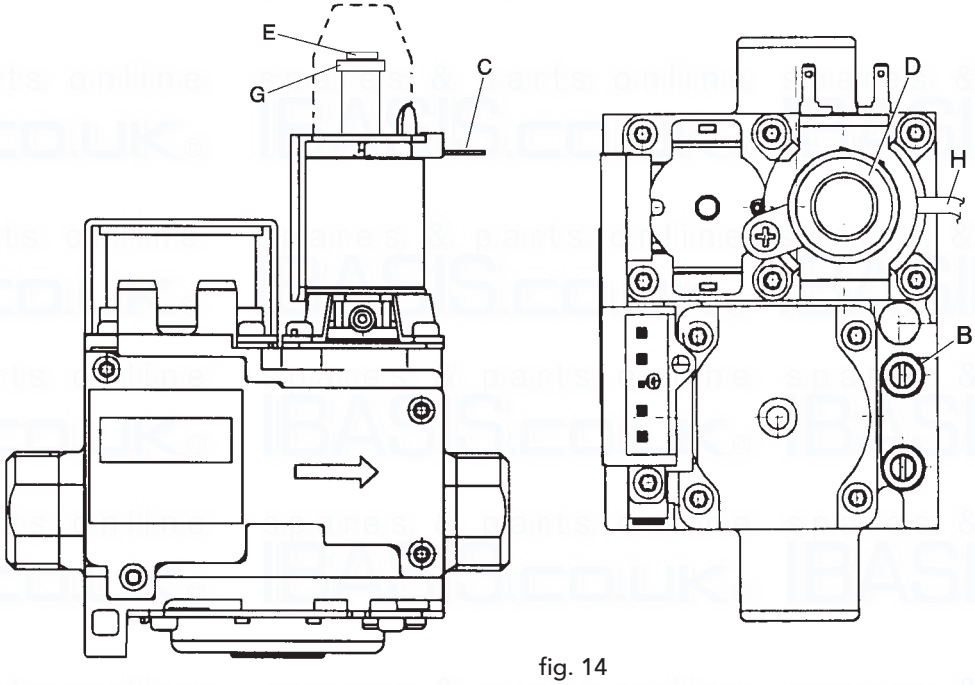

fig. 14

Key

B Pressure point
C Modureg electrical connection
D Protective cap
E Minimum pressure adjustment
G Maximum pressure adjustment
H Compensation tube

Having disturbed test point 'B' when checking or adjusting the gas pressures, it is considered mandatory to check for gas leaks using a suitable leak detection fluid or sniffer at that connection.

Adjusting the maximum heating output

To adjust the heating power, set the boiler on TEST operation (see par. 3.1). Turn the heating temperature control knob (ref. 1 - Fig. 1) clockwise to increase the power or anticlockwise to decrease it (see pressure/power diagram Fig. 21). The display shows the power setting from 0 to 99%. Exit TEST operation (see par. 3.1). The maximum heating power will remain as set during the TEST mode. (100% output shown as 99% due to the display only being 2 digits).

Ignition power adjustment

To adjust the ignition power, set the boiler on TEST operation (see par. 3.1).

Turn the hot water temperature control knob (ref. 3 - Fig. 1) clockwise to increase the power or anticlockwise to decrease it (see pressure/power diagram Fig. 20). The display shows the power setting from 0 to 60%. Exit TEST operation (see par. 3.1). The ignition power will remain as set during the TEST mode.

NOTE Recomended ignition pressure for standard 100mm concentric horizontal flueing is 30%

3.2 Initial start-up

Commissioning must be performed by Qualified Personnel only!.
Checks to be made at initial start up, and after all maintenance operations that involved disconnecting from the system or an intervention of a safety device.

Before lighting the boiler:

- Open any isolation valves between the boiler and the systems.
- Check the soundness of the gas system, proceeding with caution and using a suitable leak detection fluid to detect any leaks in connections after completing a tightness test
- Fill the water system and make sure that all air contained in the boiler and the system has been vented by opening the air vent valve on the boiler and any vent valves on the system.
- Make sure there are no water leaks in the system, hot water circuits, connections or boiler.
- Make sure the electrical supply is correctly connected.
- Make sure that the unit is connected to a good earthing system.
- Make sure that there is sufficient gas available to produce safe combustion. (min inlet working pressure = 20mbar on Natural gas).
- Make sure there are no flammable liquids or materials in the immediate vicinity of the boiler.

Lighting the boiler

- Open the gas isolation valve on the boiler.
- Purge the air from the gas pipe work to the boiler.
- Switch on the electrical supply to the boiler.
- Turn control knob "1" (Fig. 1) onto Winter in correspondence with a value greater than 50 °C and ensure the room thermostat is calling, At this point, the burner will light and the boiler begins to function automatically, controlled by its software and safety devices.

If, after following the lighting procedure, the burners do not light and fault F1 is generated, press the RESET button for 1 second and release it. The software will repeat the ignition cycle in the next 30 seconds. If the burners do not light after the second attempt, consult the "Troubleshooting" paragraph.

In case of an electrical power failure while the boiler is working, the burners will go out and reignite automatically when power is restored.

Checks during operation

- Check the soundness of the gas circuit and water systems.
- Check the efficiency of the flue and air-flue ducts while the boiler is working.
- Check that the water is circulating properly between the boiler and the systems.
- Make sure that the gas valve modulates correctly in both the heating and hot water production modes.
- Check for correct ignition of the boiler by performing various tests, turning it on and off with the room thermostat or remote control.
- Make sure that the gas consumption indicated on the meter corresponds to that given in the technical data table in chap. 4.(Input rating)
- Check there is the correct flow rate of hot water with the Δt stated in the technical data chart: The measurement should be made with specific instruments and as close as possible to the boiler, also considering the heat lost from the pipe work.
- Make sure that with no call for heating the burner ignites correctly upon opening a hot water tap. Check that during heating operation, on opening a hot water tap, the heating pump stops and there is a constant production of hot water.

Turning off

Turn the knobs (ref. 1 and 2 Fig. 1) onto minimum.
When the boiler is turned off, the printed circuit board is still powered.
Hot water and heating operations are disabled, the display shows [--]; but the frost protection mode remains active.

⚠ The frost protection system will not work if the electricity and/or gas supply to the boiler are cut off.
To avoid damage caused by freezing during long shutdowns in winter, it is advisable to drain all water from the boiler, both tap and the system water; or drain off just the tap water and add a suitable antifreeze to the heating system, as prescribed in chap. 2.3.

3.3 Maintenance

⚠ The following operations must only be carried out by suitably trained and Qualified Personnel, such as Ferroli service engineers.

Seasonal inspection of the boiler and flue

It is advisable to carry out the following checks at least once a year:

- The control and safety devices (gas valve, flow switch, thermostats, etc.) must function correctly.
- The air-flue terminal and ducts must be free of obstructions and leaks.
- The gas and water systems must be sound.
- The burner and exchanger must be clean. Follow the instructions in the next paragraph.
- The electrode must be free of debris and correctly positioned.
- The water pressure in the cold water system must be approximately 1 bar; otherwise, bring it to that value.
- The expansion vessel must be filled with air @ 1bar.
- The gas flow and pressure must correspond to that given in the respective tables.
- The circulation pump must be manually spun, vented and not be restricted.

Opening the casing

To open the boiler casing:

1 Unscrew the two screws A
2 Lower the instrument panel
3 Drop down the instrument panel
4 Fully unscrew the two screws B
5 Raise and remove the casing C

Before carrying out any operation inside the boiler, disconnect the electrical power and isolate the gas supply.

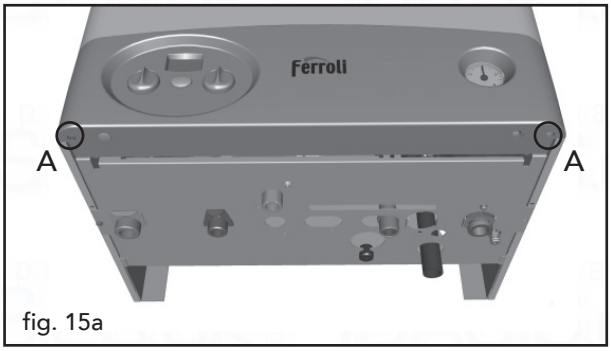

fig. 15a

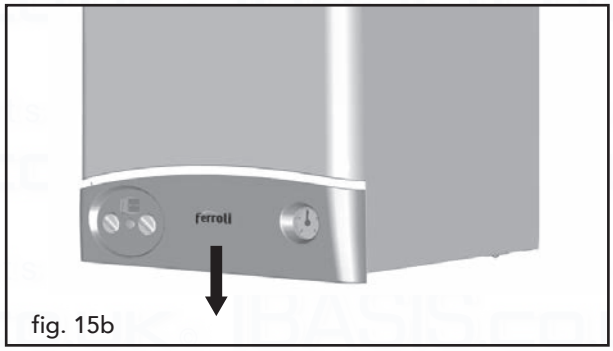

fig. 15b

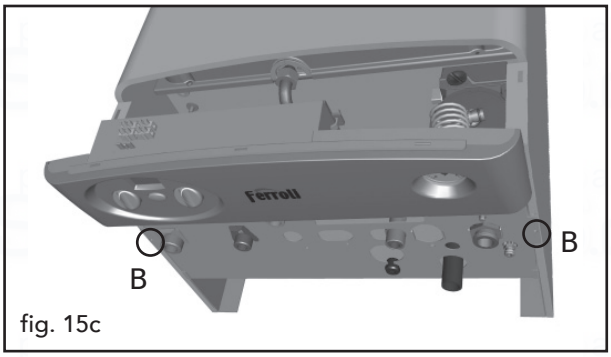

fig. 15c

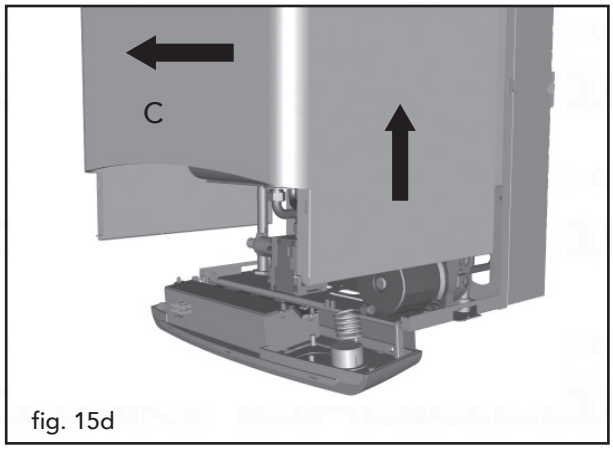

fig. 15d

Cleaning the boiler and burner

The body and burner must not be cleaned with chemical products or wire brushes. Special care must be taken over all the sealing systems pertaining to the sealed chamber (gaskets, cable clamps, etc.). After performing all these operations, check and carry out all the phases of ignition and thermostat operation, the gas valve and circulation pump.

After these checks, make sure there are no gas leaks.

Combustion analysis

Two sampling points have been included in the boiler, one for fumes and the other for air.

To take the samples:

1) Remove the boiler casing.
2) Open the air and fume sampling points on the sealed chamber.
3) Insert the probes as far as the stop.
4) Open a hot water tap.
5) Adjust the hot water temperature to maximum.
6) Wait 10-15 minutes for the boiler to stabilize*.
7) Take the measurement.

Analyses made with an unstabilized boiler can cause measurement errors.

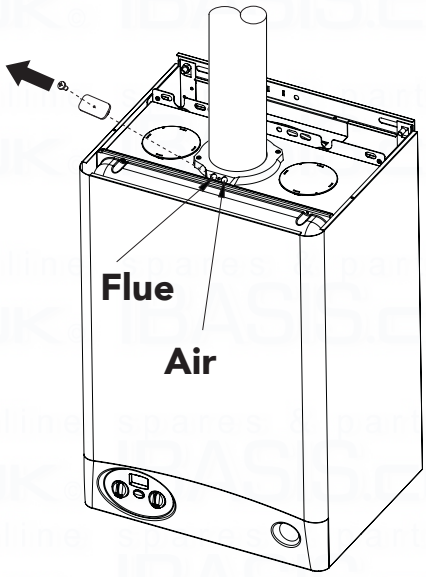

Fig. 16

3.4 Troubleshooting

Fault Diagnosis

The boiler is equipped with an advanced self-diagnosis system. In the event of a fault within the boiler, the display will show the relevant code.

There are faults that cause shutdown (faults from F1 to F3): in order to restore operation it requires the operator to press RESET for 1 second (ref. 2 - Fig. 1) if the boiler fails to start, it will be necessary to resolve the fault indicated on the display.

Other faults (from F5 to F37) cause temporary shutdowns that are automatically reset as soon as the value comes back within the boiler's normal working range.

Fault	Display code	Possible cause	Cure
No burner ignition	F1	• No gas • Detection or ignition electrode fault • Defective gas valve • Ignition power too low	• Check the regular gas flow to the boiler and the air has been eliminated from the pipes. • Check the wiring of the electrode and that it is correctly positioned and free of any deposits • Check the gas valve • Adjust the ignition power
Flame present with burner off signal	F2	• Electrode fault • PCB trouble	• Check the ionizing electrode wiring • Check the PCB
Safety thermostat trips	F3	• Heating sensor damaged • No water circulation in the system • Air in the system	• Check the correct positioning and operation of the heating sensor • Check the pump • Vent the system
Air pressure switch (fails to close the contacts within 60 sec. of turning on the fan)	F5	• Air pressure switch contact open • Incorrect wiring to the air pressure switch • Wrong restrictor • Flue not correctly sized or obstructed	• Check the wiring • Check the fan • Check the pressure switch • Change the restrictor
Sensor fault	F7	• Sensor damaged • Wiring shorted • Wiring broken	• Check the wiring or change the sensor
Hot water sensor fault	F9	• Sensor damaged • Wiring shorted • Wiring broken	• Check the wiring or change the sensor
Low system pressure	F37	• System empty • Low water pressure switch not connected or damaged	• Fill the system • Check the sensor

4 TECHNICAL CHARACTERISTICS AND DATA

4.1 Dimensions and connections

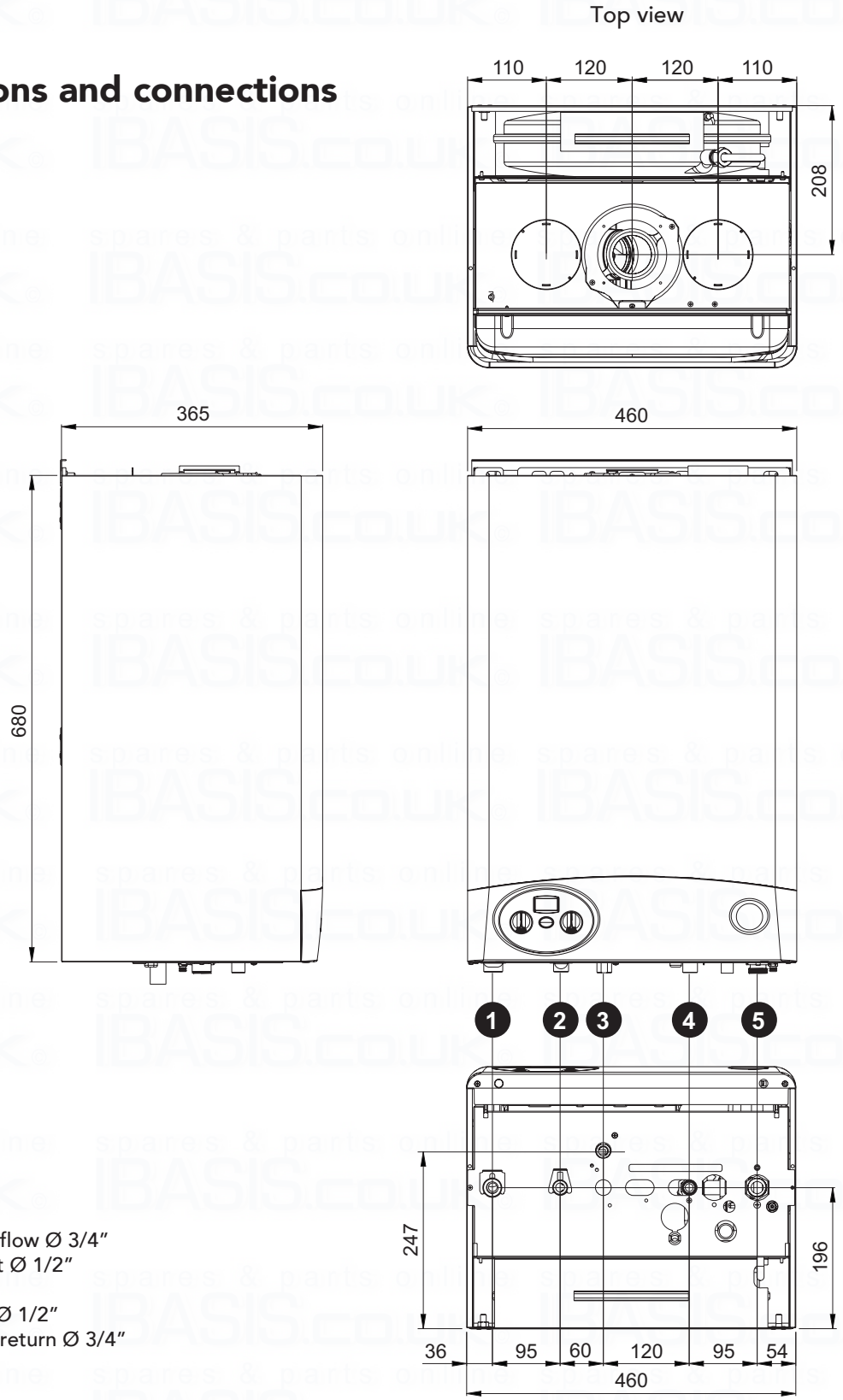

Key

1 Heating system flow Ø 3/4"
2 Hot water outlet Ø 1/2"
3 Gas inlet 1/2"
4 Tap water inlet Ø 1/2"
5 Heating system return Ø 3/4"

Fig. 17

4.2 General view and main components

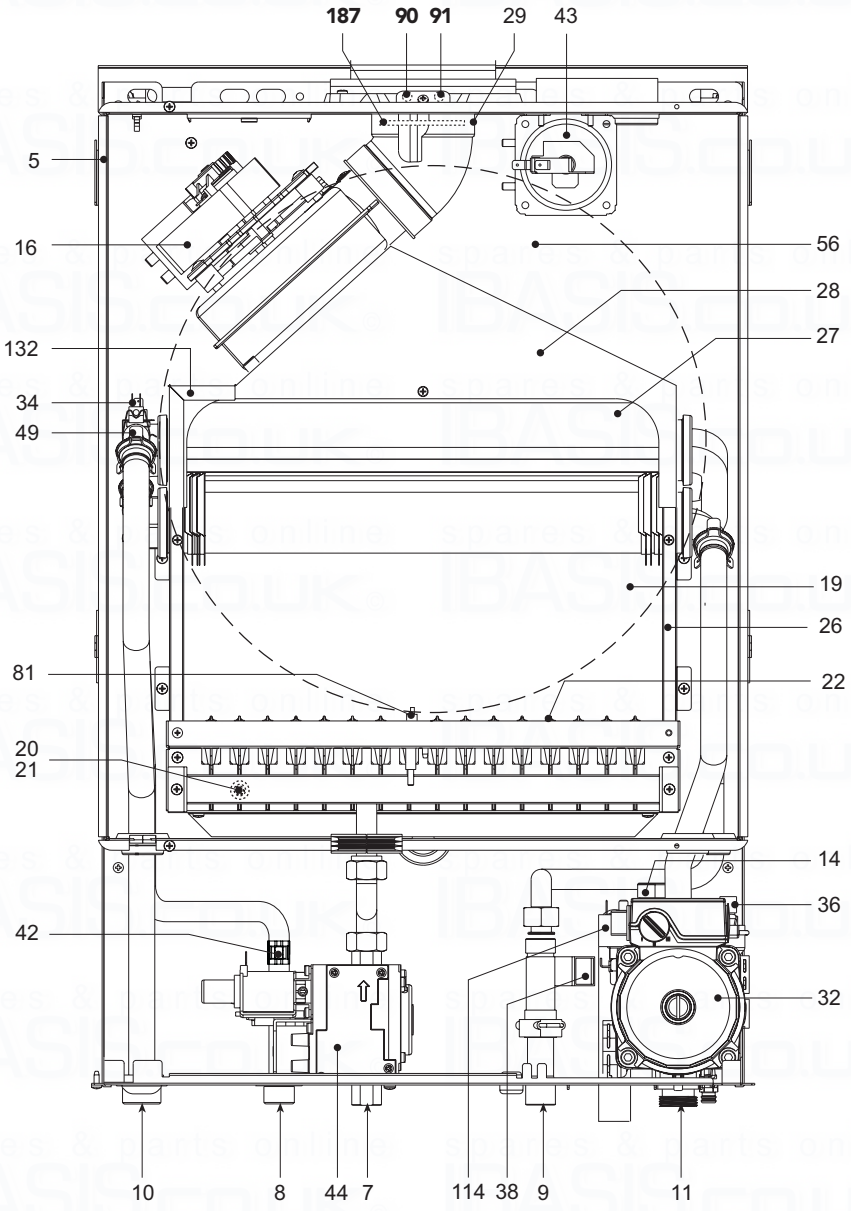

Fig. 18

Key

5	Airtight chamber
7	Gas inlet
8	Hot water outlet
9	Cold water inlet
10	System flow
11	System return
14	Safety valve
16	Fan
19	Combustion chamber
20	Burner assembly
21	Injectors
22	Burner
26	Combustion chamber insulation
27	Copper exchanger for heating and hot water
28	Flue hood
29	Flue outlet manifold
32	Central heating pump
34	Heating temp. sensor
36	Automatic air vent
38	Flow switch
42	Tap water temperature sensor
43	Air pressure switch
44	Gas valve
47	Modureg
49	Safety thermostat
56	Expansion vessel
81	Ignition and detection electrode
90	Flue sample point
91	Air sample point
114	Low water pressure switch
132	Flue deflector
187	Flue restrictor

4.3 Hydraulic diagram

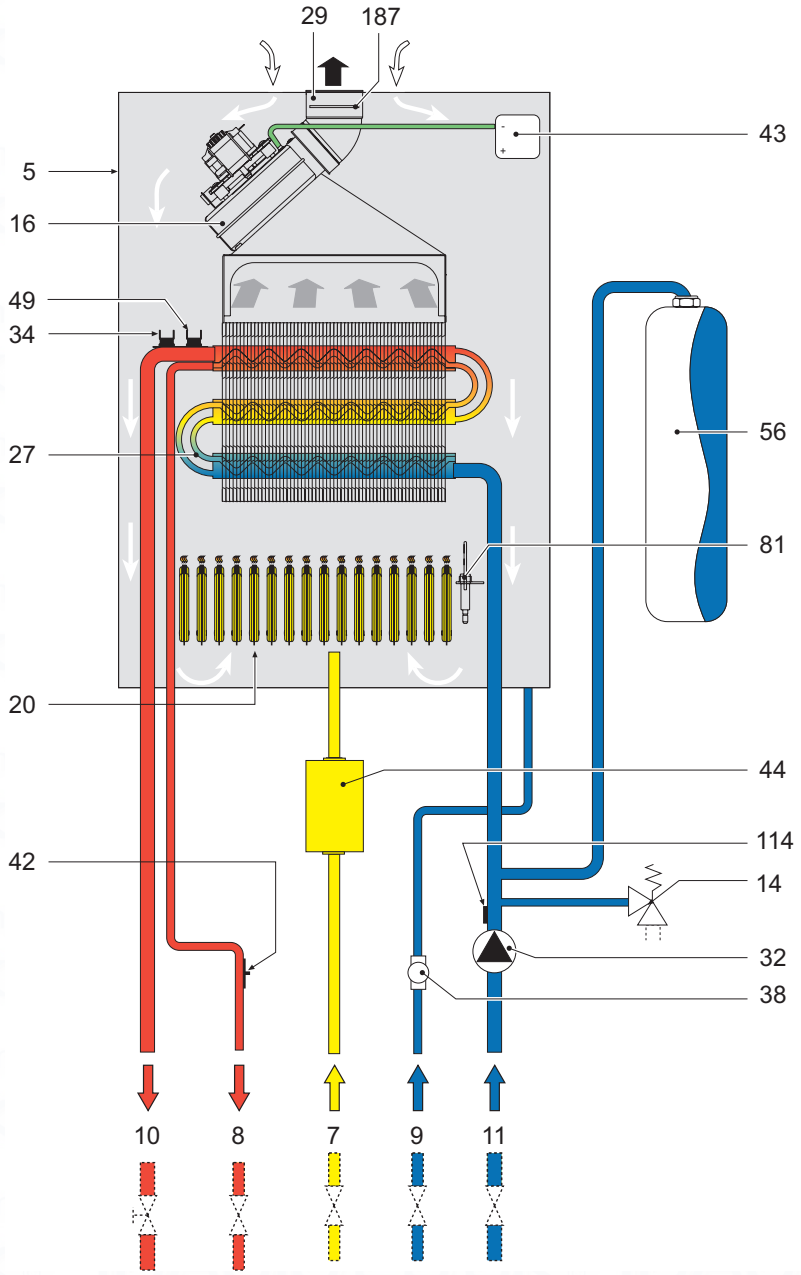

Fig. 19

Key

5	Airtight chamber	32	Heating pump
7	Gas inlet	34	Heating temperature sensor
8	Tap water outlet	38	Flow switch
9	Tap water inlet	42	Tap water temperature sensor
10	System flow	43	Air pressure switch
11	System return	44	Gas valve
14	Safety valve	49	Safety thermostat
16	Fan	56	Expansion vessel
20	Burner assembly	81	Ignition and detection electrode
27	Heat exchanger	114	Low water pressure switch
29	Flue outlet collar	187	Flue restrictor

4.4 Technical data table

Powers		Pmax	Pmin
Heating Power (Net Heat Value - Hi)	kW	33,3	10,7
Useful heating power 80 °C - 60 °C	kW	31,0	9,2
Hot Water Heating Power	kW	31,0	9,2
Energy marking (92/42 EEC directive)		★★★	
NOx emission class		3	
Gas supply		**Pmax**	**Pmin**
Natural Gas main nozzles (G20)	mm	16 x 1,30	
Natural Gas supply pressure (G20)	mbar	20,0	
Pressure at Natural Gas burner (G20)	mbar	12,0	1,5
Natural Gas delivery (G20)	m^3/h	3,52	1,13
LPG main nozzles (G31)	mm	16 x 0,77	
LPG supply pressure (G31)	mbar	37,0	
Pressure at LPG burner (G31)	mbar	35,0	5,0
LPG delivery (G31)	kg/h	2,60	0,84
Heating			
Maximum working temperature in heating	°C	90	
Maximum working pressure in heating	bar	3	
Safety valve	bar	3	
Minimum working pressure in heating	bar	0,8	
Expansion vessel capacity	litres	10	
Expansion vessel pre-filling pressure	bar	1	
Boiler water content	litres	1,8	
Hot water			
Specific flow rate with Δt 25 °C	l/min	17,7	
Specific flow rate with Δt 30 °C	l/min	14,8	
Maximum working pressure in hot water production	bar	9	
Minimum working pressure in hot water production	bar	0,25	
Hot water content	litres	0,8	
Dimensions, weights connections			
Height	mm	680	
Width	mm	460	
Depth	mm	365	
Weight	kg	42	
Gas system connection	Inches.	1/2”	
Heating system connections	Inches.	3/4”	
Hot water circuit connections	Inches.	1/2”	
Electrical power supply			
Max electrical power absorbed	W	125	
Hot water max electrical power absorbed	W	55	
Power voltage/frequency	V/Hz	230/50	
Electrical protection rating	IP	X5D	

4.5 Diagrams

Burner pressure to boiler output

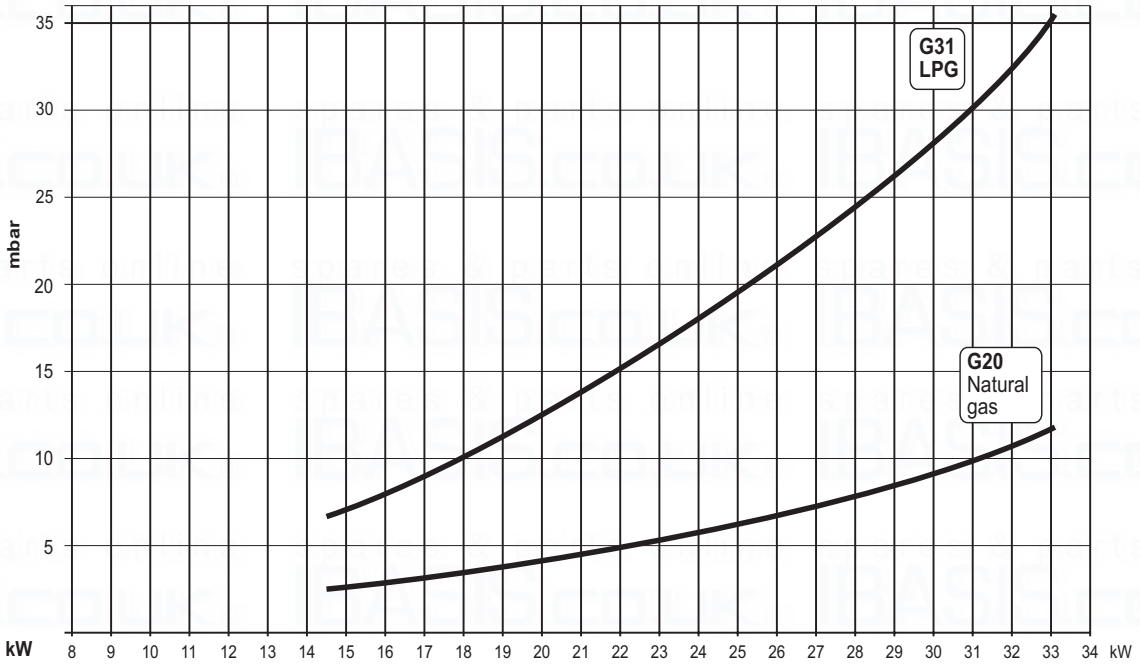

Fig. 20

Circulator losses of head

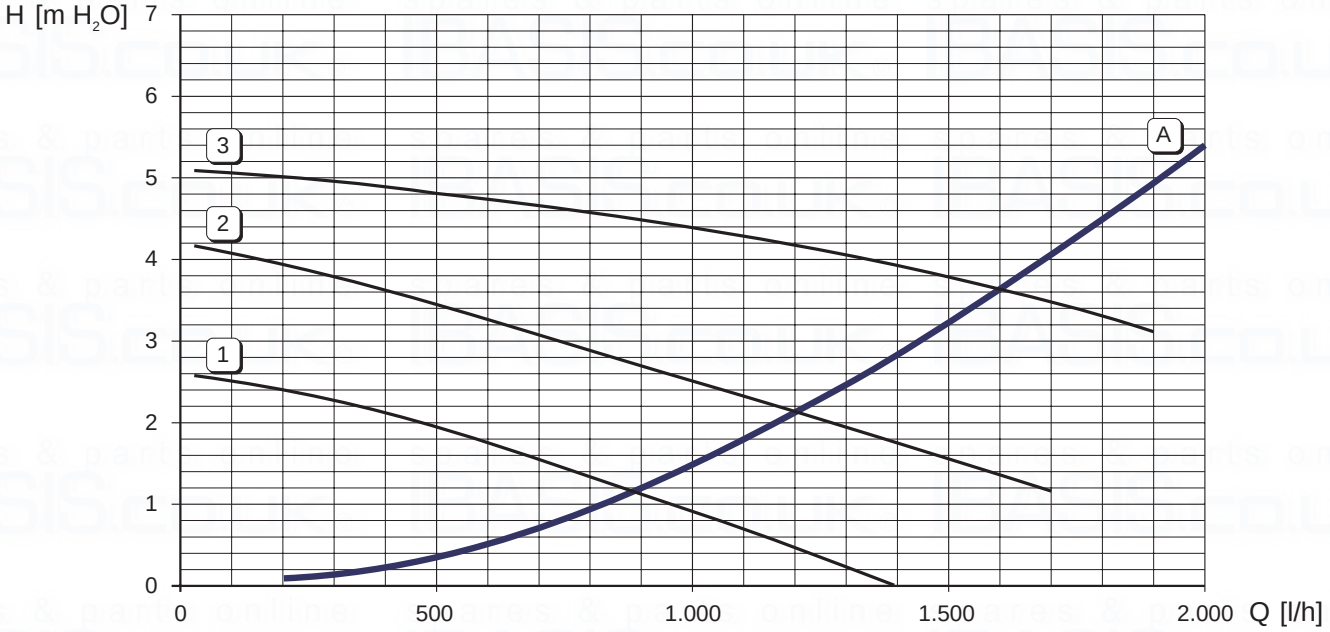

Fig. 21

1 2 3 = Circulator speed

A = Boiler losses of head

4.6 Time Clock (optional)

A 24 hour time clock can be optionally fitted to the boiler to control the central heating, this will come into operation when the selector switch "F" is turned to the position marked "AUTO".

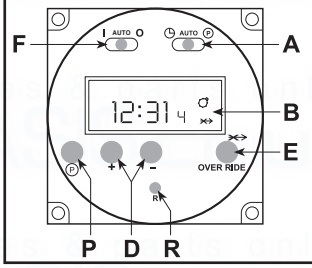

A Slide switch: set clock - auto - set programme
B Display. Symbol in Display = Timer ON
P Select programme ON/OFF 1.....8
D Push buttons Time + Time –
E Override: Boiler will switch ON if it is OFF; and OFF if it is ON
F I=Heating continuous - AUTO=Heating timed - O=Heating disabled
R Reset (with pencil) only with switch **A** in set clock position

To set time of day

1. Slide switch (**A**) to left position
2. Using button + and – adjust until the correct time is shown on display (**B**).

Pre Set Programmes. The timer is pre programmed with 3 ON and 3 OFF times.

6:30 - 8:30 12:00 - 12:00 16:30 - 22:30	If these are suitable no programming is required and the slide switch (**A**) can be moved to the Auto position and the central heating will be ON for these periods. (12:00 - 12:00 will not switch on the boiler)

To Set Own ON and OFF times. Symbol in Display = ON time

1. Slide switch (**A**) to right position (**P**)
   Display 6:30 1
2. Press button (**P**)
   Display 8:30 2
3. Press button (**P**)
   Display 12:00 3
4. Press button (**P**)
   Display 12:00 4
5. Press button (**P**)
   Display 16:30 5
6. Press button (**P**)
   Display 22:30 6
7. The timer can be programmed with up to 8 ON and 8 OFF times by repeating the above procedure.

1.1 Use buttons + and - to set 1st ON time eg. 6:00
   Display 6:00 1
2.1 Use buttons + and - to set OFF time, eg. 9:00
   Display 9:00 2
3.1 Use button + and - to set 2nd ON time, eg. 12:30
   Display 12:30 3
4.1 Use button + and - to set 2nd OFF time eg. 14:00
   Display 14:00 4
5.1 Use button + and - to set 3rd ON time, eg. 16:00
   Display 16:00 5
6.1 Use button + and - to set 3rd OFF time eg. 23:30
   Display 23:30 6
8. On completion of programming slide switch (**A**) to Auto position, the time of day will be displayed and the central heating will switch ON and OFF according to the programme set.

Over ride

By pressing the over ride button (**E**) the timer programme is over ridden ie, if programme is in OFF time it will come ON and if in ON time will go OFF.
The timer will revert back to it set programme on reaching the next ON or OFF time.
When the programme is on over ride the sign will be shown in the display window (**B**).

Reset Button

By the use of a pencil the reset button can be pushed (**R**). This will clear all programmes apart from those factory pre set.
Reset is only possible with switch (A) in set Clock position!

4.7 Wiring diagram

Key

16 Fan
32 Central heating pump
34 Heating temp. sensor
38 Flow switch
42 Tap water temperature sensor
43 Air pressure switch
44 Gas valve
47 Modureg
49 Safety thermostat
72 Room thermostat
81 Ignition/detection electrode
114 Low water pressure switch
139 Remote timer control (opentherm)

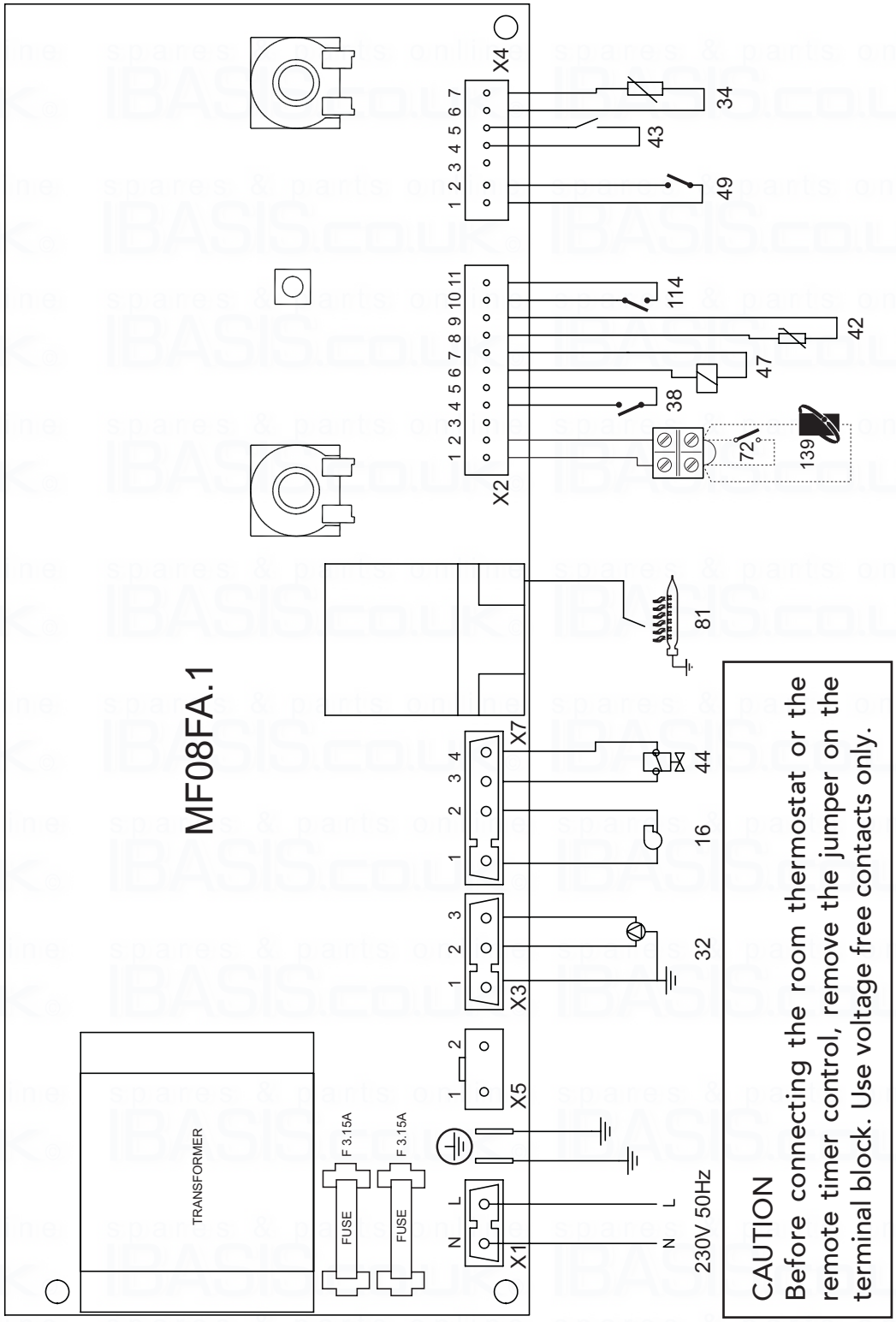

Fig. 22

BENCHMARK No. 2 6 7 _ _ _

Please add the first 4 digits of the Boiler serial No to complete the BENCHMARK No.

benchmark™ COLLECTIVE MARK

GAS BOILER COMMISSIONING CHECKLIST

BOILER SERIAL No. _____ **NOTIFICATION No.** _____

CONTROLS *To comply with the Building Regulations, each section must have a tick in one or other of the boxes*

TIME & TEMPERATURE CONTROL TO HEATING	ROOM T/STAT & PROGRAMMER/TIMER	☐	PROGRAMMABLE ROOMSTAT	☐
TIME & TEMPERATURE CONTROL TO HOT WATER	CYLINDER T/STAT & PROGRAMMER/TIMER	☐	COMBI BOILER	☐
HEATING ZONE VALVES	FITTED	☐	NOT REQUIRED	☐
HOT WATER ZONE VALVES	FITTED	☐	NOT REQUIRED	☐
THERMOSTATIC RADIATOR VALVES	FITTED	☐		
AUTOMATIC BYPASS TO SYSTEM	FITTED	☐	NOT REQUIRED	☐

FOR ALL BOILERS CONFIRM THE FOLLOWING

THE SYSTEM HAS BEEN FLUSHED IN ACCORDANCE WITH THE BOILER MANUFACTURER'S INSTRUCTIONS? ☐

THE SYSTEM CLEANER USED

THE INHIBITOR USED

FOR THE CENTRAL HEATING MODE, MEASURE & RECORD

GAS RATE		m^3/hr		ft^3/hr
BURNER OPERATING PRESSURE (IF APPLICABLE)	☐	N/A		mbar
CENTRAL HEATING FLOW TEMPERATURE				°C
CENTRAL HEATING RETURN TEMPERATURE				°C

FOR COMBINATION BOILERS ONLY

HAS A WATER SCALE REDUCER BEEN FITTED? YES ☐ NO ☐

WHAT TYPE OF SCALE REDUCER HAS BEEN FITTED?

FOR THE DOMESTIC HOT WATER MODE, MEASURE & RECORD

GAS RATE		m^3/hr		ft^3/hr
MAXIMUM BURNER OPERATING PRESSURE (IF APPLICABLE)	☐	N/A		mbar
COLD WATER INLET TEMPERATURE				°C
HOT WATER OUTLET TEMPERATURE				°C
WATER FLOW RATE				lts/min

FOR CONDENSING BOILERS ONLY CONFIRM THE FOLLOWING

THE CONDENSATE DRAIN HAS BEEN INSTALLED IN ACCORDANCE WITH THE MANUFACTURER'S INSTRUCTIONS? YES ☐

FOR ALL INSTALLATIONS CONFIRM THE FOLLOWING

THE HEATING AND HOT WATER SYSTEM COMPLIES WITH CURRENT BUILDING REGULATIONS ☐

THE APPLIANCE AND ASSOCIATED EQUIPMENT HAS BEEN INSTALLED AND COMMISSIONED IN ACCORDANCE WITH THE MANUFACTURER'S INSTRUCTIONS ☐

IF REQUIRED BY THE MANUFACTURER, HAVE YOU RECORDED A CO/CO_2 RATIO READING? N/A ☐ YES _____ CO/CO_2 RATIO

THE OPERATION OF THE APPLIANCE AND SYSTEM CONTROLS HAVE BEEN DEMONSTRATED TO THE CUSTOMER ☐

THE MANUFACTURER'S LITERATURE HAS BEEN LEFT WITH THE CUSTOMER ☐

COMMISSIONING ENG'S NAME PRINT _____ CORGI ID No. _____

SIGN _____ DATE _____

SERVICE INTERVAL RECORD

It is recommended that your heating system is serviced regularly
and that you complete the appropriate Service Interval Record Below.

Service Provider. Before completing the appropriate Service Interval Record below, please ensure you have carried out the service as described in the boiler manufacturer's instructions. Always use the manufacturer's specified spare part when replacing all controls

SERVICE 1 DATE
ENGINEER NAME
COMPANY NAME
TEL No.
CORGI ID CARD SERIAL No.
COMMENTS
SIGNATURE

SERVICE 2 DATE
ENGINEER NAME
COMPANY NAME
TEL No.
CORGI ID CARD SERIAL No.
COMMENTS
SIGNATURE

SERVICE 3 DATE
ENGINEER NAME
COMPANY NAME
TEL No.
CORGI ID CARD SERIAL No.
COMMENTS
SIGNATURE

SERVICE 4 DATE
ENGINEER NAME
COMPANY NAME
TEL No.
CORGI ID CARD SERIAL No.
COMMENTS
SIGNATURE

SERVICE 5 DATE
ENGINEER NAME
COMPANY NAME
TEL No.
CORGI ID CARD SERIAL No.
COMMENTS
SIGNATURE

SERVICE 6 DATE
ENGINEER NAME
COMPANY NAME
TEL No.
CORGI ID CARD SERIAL No.
COMMENTS
SIGNATURE

SERVICE 7 DATE
ENGINEER NAME
COMPANY NAME
TEL No.
CORGI ID CARD SERIAL No.
COMMENTS
SIGNATURE

SERVICE 8 DATE
ENGINEER NAME
COMPANY NAME
TEL No.
CORGI ID CARD SERIAL No.
COMMENTS
SIGNATURE

SERVICE 9 DATE
ENGINEER NAME
COMPANY NAME
TEL No.
CORGI ID CARD SERIAL No.
COMMENTS
SIGNATURE

SERVICE 10 DATE
ENGINEER NAME
COMPANY NAME
TEL No.
CORGI ID CARD SERIAL No.
COMMENTS
SIGNATURE

FERROLI TECHNICAL HELPLINE - 08707 282 885 option 1

spares & parts online
IBASIS.co.uk®

Should you require any assistance during the installation call our Technical Service Helpline on 08707 282 885 option 1

Should you require a service engineer to visit call our service centre on 08707 282 885 option 2

(For U.K. and Northern Ireland)

For EIRE only call HEATOVENT on 014508166

Phone numbers:

Installer _____

Service Engineer _____

BECAUSE OF OUR CONSTANT ENDEAVOUR FOR IMPROVEMENT DETAILS MAY VARY SLIGHTLY FROM THOSE QUOTED IN THESE INSTRUCTIONS.

Ferroli

ALL SPECIFICATIONS SUBJECT TO CHANGE

Please note - to avoid incurring unnecessary expense, in the event of a boiler shut down, check this is not caused by lack of electricity supply, gas supply or low water pressure before calling our Customer Service Helpline.

Lichfield Road, Branston Industrial Estate, Burton Upon Trent, Staffordshire DE14 3HD
Tel. 08707 282 885 - Fax 08707 282 886

EIRE only:
HEATOVENT Greenhills Industrial Estate,
Greenhills Road, Walkinstown, Dublin 12, IRELAND
Tel 014508166 - Fax 014508501