Ferroli

GRUPPO FERROLI

ENERGY TOP W 70 - W 80 - W 125

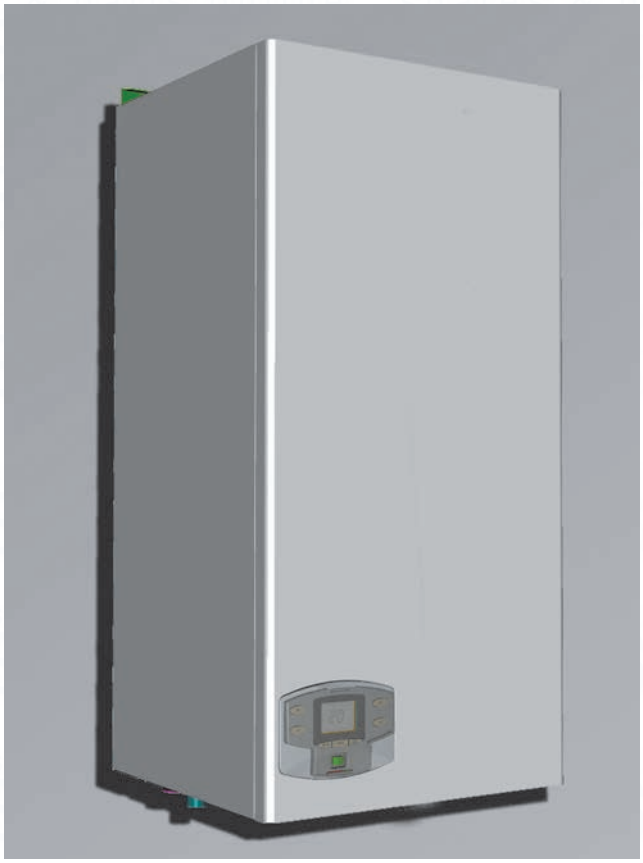

CE

IT - ISTRUZIONE PER L'USO L'INSTALLAZIONE E LA MANUTENZIONE
ES - INSTRUCCIONES DE USO, INSTALACIÓN Y MANTENIMIENTO
TR - KULLANMA, KURULUM VE BAKİM TALIMATLARİ
EN - INSTRUCTIONS FOR USE, INSTALLATION AND MAINTENANCE
FR - INSTRUCTIONS D'UTILISATION, D'INSTALLATION ET D'ENTRETIEN
RO - INSTRUCȚIUNI DE UTILIZARE, INSTALARE ŞI ÎNTRETINERE
RU - РУКОВОДСТВО ПО ЭКСПЛУАТАЦИИ, МОНТАЖУ И ТЕХОБСЛУЖИВАНИЮ
UA - ІНСТРУКЦІЯ З ЕКСПЛУАТАЦІЇ, МОНТАЖУ ТА ОБСЛУГОВУВАННЯ

cod. 35405807 – Rev. 00 - 12/2013

spares & parts online IBASIS.CO.UK

EN

1. GENERAL WARNINGS

- Carefully read and follow the instructions contained in this instruction booklet.
- After boiler installation, inform the user regarding its operation and give him this manual, which is an integral and essential part of the product and must be kept with care for future reference.
- Installation and maintenance must be carried out by professionally qualified personnel, in compliance with the current regulations and according to the manufacturer's instructions. Do not carry out any operation on the sealed control parts.
- Incorrect installation or inadequate maintenance can result in damage or injury. The Manufacturer declines any liability for damage due to errors in installation and use, or failure to follow the instructions.
- Before carrying out any cleaning or maintenance operation, disconnect the unit from the electrical power supply using the switch and/or the special cut-off devices.
- In case of a fault and/or poor operation, deactivate the unit and do not try to repair it or directly intervene. Contact professionally qualified personnel. Any repair/replacement of the products must only be carried out by qualified personnel using original replacement parts. Failure to comply with the above could affect the safety of the unit.
- This unit must only be used for its intended purpose. Any other use is deemed improper and therefore hazardous.
- The packing materials are potentially hazardous and must not be left within the reach of children.
- The unit must not be used by people (including children) with limited physical, sensory or mental abilities or without experience and knowledge of it, unless instructed or supervised in its use by someone responsible for their safety.
- The unit and its accessories must be appropriately disposed of, in compliance with the current regulations.
- The images given in this manual are a simplified representation of the product. In this representation there may be slight and insignificant differences with respect to the product supplied.

2. OPERATING INSTRUCTIONS

2.1 Introduction

Dear Customer,

Thank you for choosing **ENERGY TOP W 70 - W 80 - W 125**, a wall-mounted boiler featuring **FERROLI**advanced design, cutting-edge technology, high reliability and quality construction. Please read this manual carefully since it provides important information on safe installation, use and maintenance.

ENERGY TOP W 70 - W 80 - W 125 is a high efficiency, low emissions sealed chamber **premix condensing** heat generator for heating, running on natural gas or LPG and equipped with a microprocessor control system.

The **boiler shell** consists of an aluminium finned tube exchanger and a **premix burner** in steel, equipped with electronic ignition and ionisation flame control, a modulating speed fan and a modulating gas valve. **ENERGY TOP W 70 - W 80 - W 125** is a heat generator arranged to operate alone or in cascade.

2.2 Control panel

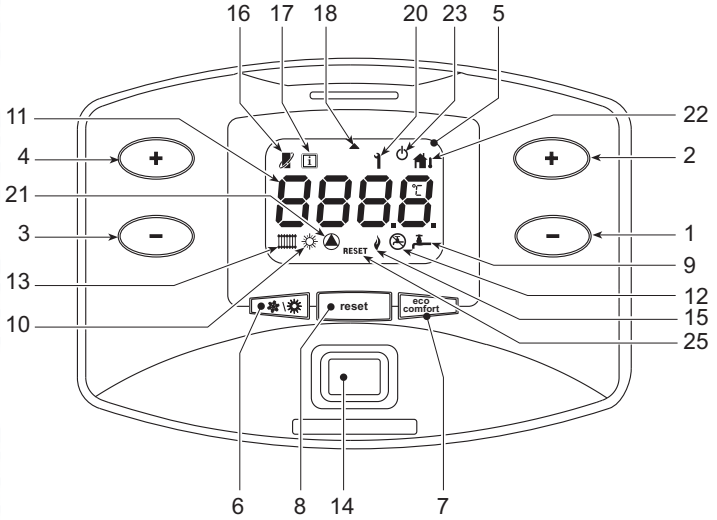

fig. 1 - Control panel

Key

1 = DHW temperature setting decrease button (with optional hot water tank installed)
2 = DHW temperature setting increase button (with optional hot water tank installed)
3 = Heating system temperature setting decrease button
4 = Heating system temperature setting increase button
5 = Display
6 = Summer/Winter mode selection button
7 = Economy/Comfort mode selection (with optional hot water tank installed) and unit On/Off button
8 = Reset button
9 = DHW operation (with optional hot water tank installed)
10 = Summer mode
11 = Multifunction
12 = Eco (Economy) mode (with optional hot water tank installed)
13 = Heating mode
14 = Unit On / Off button
15 = Burner On
16 = Appears on connecting the Remote Timer Control (optional)
17 = Information symbol
18 = Arrow symbol
20 = Fault
21 = Circulating pump On
22 = Appears on connecting the external probe (optional)
23 = Boiler Off
25 = Fault reset request

Indication during operation

Heating

A heating demand (generated by the Room Thermostat or Remote Timer Control or 0-10 Vdc signal) is indicated by activation of the circulating pump and the radiator (details 13 and 21 - fig. 1).

The display (detail 11 - fig. 1) shows the actual heating delivery temperature, and during DHW standby time, the message "d".

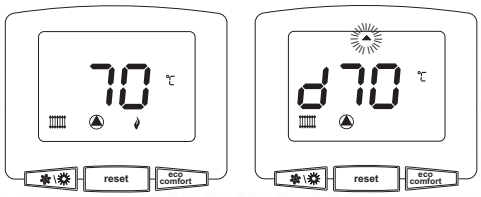

fig. 2

DHW circuit (with optional hot water tank installed)

A hot water tank heating demand is indicated by activation of the circulating pump and the tap (details 9 and 21 - fig. 1). The display (detail 11 - fig. 1) shows the actual hot water tank sensor temperature, and during heating standby time, the message **"d"**.

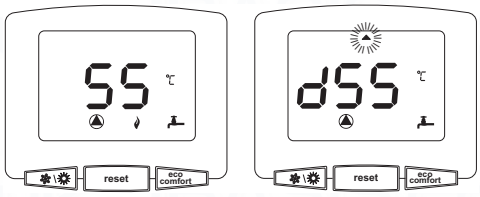

fig. 3 -

Exclude hot water storage tank (economy)

Hot water tank temperature maintaining/heating can be excluded by the user. If excluded, domestic hot water will not be delivered. The hot water tank can be deactivated by the user (ECO mode) by pressing the **eco/comfort** button (detail 7 - fig. 1). In ECO mode the display activates the symbol (detail 12 - fig. 1). To activate the COMFORT mode, press the **eco/comfort** button (detail 7 - fig. 1) again.

2.3 Lighting and turning off

Boiler lighting

Press the On/Off button (detail 14 - fig. 1).

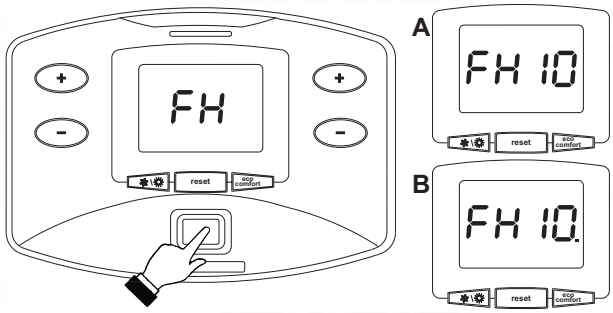

fig. 4 - Boiler lighting

- For the following 120 seconds the display will show FH which identifies the heating system air venting cycle.
- During the first 10 seconds the display will also show the card software release (**A =** Display card software release / **B =** Controller software release).
- Open the gas cock ahead of the boiler.
- When the message FH disappears, the boiler is ready to operate automatically in case of a room thermostat demand.

Turning the boiler off

Press the button **eco/comfort** (detail 7 - fig. 1) for 5 seconds.

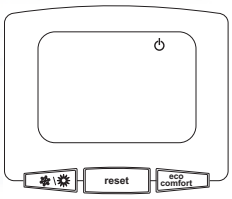

fig. 5 - Turning the boiler off

When the boiler is turned off, the PCB is still powered.

Domestic hot water (with optional hot water tank installed) and heating operation are disabled. The antifreeze system remains activated.

To relight the boiler, press the button **eco/comfort** (detail 7 - fig. 1) again for 5 seconds.

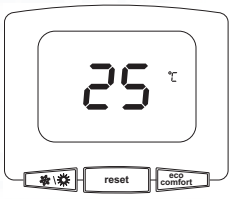

fig. 6

The boiler will be immediately ready to operate whenever domestic hot water is drawn (with optional hot water tank installed) or in case of a room thermostat demand.

To completely disconnect the power to the unit, press the button (detail 14 - fig. 1).

The antifreeze system does not work when the power and/or gas to the unit are turned off. To avoid damage caused by freezing during long idle periods in winter, it is advisable to drain all water from the boiler, DHW circuit and system; or drain just the DHW circuit and add a suitable antifreeze to the heating system, complying with that prescribed in sec. 3.3.

2.4 Adjustments

Summer/Winter Switchover

Press the button (detail 6 - fig. 1) for 1 second.

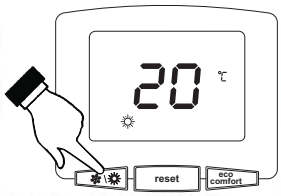

fig. 7

The display activates the Summer symbol (detail 10 - fig. 1). The heating function is deactivated, whereas the possible production of domestic hot water (with optional external hot water tank) remains activated. The antifreeze system remains activated.

To deactivate Summer mode, press the button (detail 6 - fig. 1) again for 1 second.

Heating temperature adjustment

Use the heating buttons **+/-** (details 3 and 4 - fig. 1) to adjust the temperature from a min. of 20°C to a max. of 90°C.

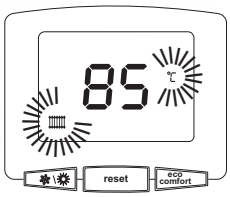

fig. 8

DHW temperature adjustment (with optional hot water tank installed)

Use the **DHW buttons** (details 1 and 2 - fig. 1) to adjust the temperature from a min. of 10°C to a max. of 65°C.

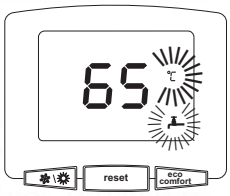

fig. 9

Room temperature adjustment (with optional room thermostat)

Using the room thermostat, set the temperature required in the rooms.

Room temperature adjustment (with optional remote timer control)

Using the remote timer control, set the temperature desired in the rooms. The boiler unit will set the system water according to the required room temperature. For information on the remote timer control, please refer to its user's manual.

Sliding temperature

When the optional external probe is installed the corresponding symbol (detail 22 - fig. 1) is activated on the control panel display (detail 5 - fig. 1). The boiler control system works with "Sliding Temperature". In this mode, the heating system temperature is controlled according to the outside weather conditions in order to ensure high comfort and energy saving throughout the year. In particular, as the outside temperature increases, the system delivery temperature is decreased according to a specific "compensation curve".

With Sliding Temperature adjustment, the temperature set with the heating buttons **(details** 3 and 4 - fig. 1) becomes the maximum system delivery temperature. It is advisable to set a maximum value to allow system adjustment throughout its useful operating range.

The boiler must be adjusted at the time of installation by qualified personnel. Adjustments can in any case be made by the user to improve comfort .

Compensation curve and curve offset

Press the **reset** button (detail 8 - fig. 1) for 5 seconds, to display the actual compensation curve (fig. 10) which can be modified with the **DHW buttons** (details 1 and 2 - fig. 1).

Adjust the required curve from 1 to 10 according to the characteristic (fig. 12).

By setting the curve to 0, sliding temperature adjustment is disabled.

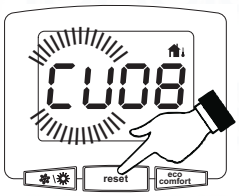

fig. 10 - Compensation curve

Press the **heating buttons** (details 3 and 4 - fig. 1) to access parallel curve offset (fig. 13), modifiable with the **DHW buttons** (details 1 and 2 - fig. 1).

fig. 11 - Curve parallel offset

Press the **reset** button (detail 8 - fig. 1) again for 5 seconds to exit parallel curve adjustment mode.

If the room temperature is lower than the required value, it is advisable to set a higher order curve and vice versa. Proceed by increasing or decreasing in steps of one and check the result in the room.

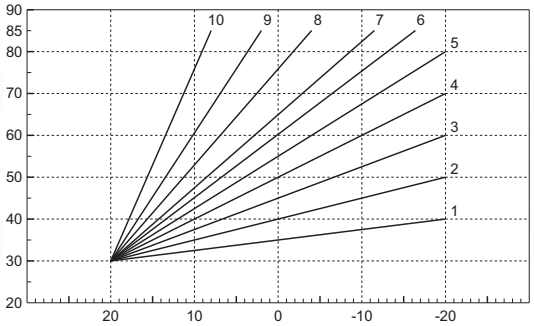

fig. 12 - Compensation curves

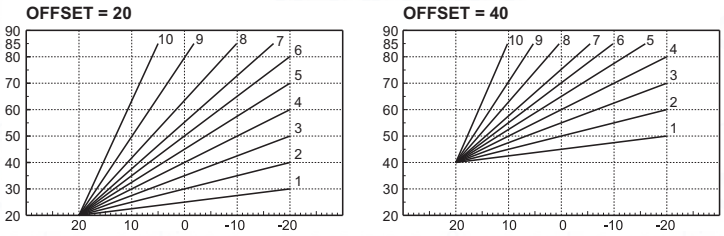

fig. 13 - Example of compensation parallel curve offset

If the Remote Timer Control (optional) is connected to the boiler, the above adjustments are managed according to that given in table 1.

Table. 1

Heating temperature adjustment	Adjustment can be made from the Remote Timer Control menu and the boiler control panel.
DHW temperature adjustment (with optional hot water tank installed)	Adjustment can be made from the Remote Timer Control menu and the boiler control panel.
Summer/Winter Switchover	Summer mode has priority over a possible Remote Timer Control heating demand.
Eco/Comfort selection (with optional hot water tank installed)	On disabling DHW from the Remote Timer Control menu, the boiler selects the Economy mode. In this condition, the button detail 7 -fig. 1 on the boiler panel is disabled.
	On enabling DHW from the Remote Timer Control menu, the boiler selects the Comfort mode. In this condition it is possible select one of the two modes with the button detail 7 -fig. 1.
Sliding Temperature	Both the Remote Timer Control and the boiler card manage Sliding Temperature adjustment: of the two, the Sliding Temperature of the boiler card has priority.

Plumbing system pressure adjustment

The filling pressure with the system cold must be approx. 1.0 bar. If the system pressure falls to values below minimum, the boiler card will activate fault F37 (fig. 14).

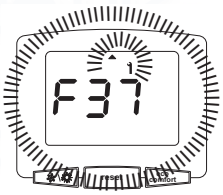

fig. 14 - Low system pressure fault

Once the system pressure is restored, the boiler will activate the 120-second air venting cycle indicated on the display by FH.

3. INSTALLATION

3.1 General Instructions

THE BOILER MUST ONLY BE INSTALLED BY QUALIFIED PERSONNEL, IN COMPLIANCE WITH ALL THE INSTRUCTIONS GIVEN IN THIS TECHNICAL MANUAL, THE PROVISIONS OF CURRENT LAW, THE NATIONAL AND LOCAL REGULATIONS, AND THE RULES OF PROPER WORKMANSHIP.

ENERGY TOP W 70 - W 80 - W 125 is a heat generator arranged to operate alone or in cascade (bank).

To install up to 4 generators **in bank**, appropriate accessories consisting of support frames, water, gas and fume manifolds are available on request (consult the price-list or contact the sales network)**FERROLI**.

The boiler's electronics can in any case manage a cascade **of up to 6 modules**. To create systems in cascade with 5 or 6 modules it is necessary to have suitably sized water / gas manifolds complete with all the safety devices required by the current regulations , as well as single fume exhausts or fume manifolds in low pressure (not supplied) installed by a qualified technician .

When two or more generators ENERGY TOP W 70 - W 80 - W 125 are installed in cascade with the original kits FERROLI, respecting the instructions given in this manual, they can be considered as a single equivalent heat generator with a total capacity equal to the sum of powers of all the units connected cascade .

All the requirements of the current standards and regulations applicable to this "equivalent" generator with total heating capacity must be met. In particular, the place of installation, safety devices and fume exhaust system must be adequate for the total heating capacity of the bank of units.

In fact, each ENERGY TOP W 70 - W 80 - W 125 is a complete and independent heat generator, equipped with its own safety devices. In case of overtemperature, lack of water or no circulation in the unit, the protection devices cause the unit to switch off or shut down, preventing it from working.

The installation instructions given in the following paragraphs concern single units and connection in cascade.

3.2 Place of installation

The combustion circuit is sealed with respect to the place of installation and therefore the unit can be installed in any room. However, the place of installation must be sufficiently ventilated to prevent the creation of any dangerous conditions in case of even small gas leaks. This safety precaution is required by EEC Directive no. 90/396 for all gas-fired units, including those with a so-called sealed chamber.

The unit can also work with air drawn from the installation room (B type). In this case, the room must be provided with adequate ventilation, according to current regulations.

Therefore the place of installation must be free of dust, flammable materials or objects or corrosive gases. The room must be dry and not subject to freezing.

The boiler is arranged for wall installation. Wall fixing must ensure a stable and effective support for the generator.

If the unit is enclosed in a cabinet or mounted alongside, a space must be provided for removing the casing and for normal maintenance operations

3.3 Plumbing connections

The heating capacity of the unit must be previously established by calculating the building's heat requirement according to the current regulations. The system must be provided with all the components for correct and regular operation. In particular, provide for all the protection and safety devices required by the current regulations for the complete modular generator. They must be installed on the hot water circuit delivery piping, immediately after the last module, within a distance of not more than 0.5 metres, with no shut-off devices in between. The unit is not supplied with an expansion tank, therefore its connection must be carried out by the Installer.

The safety valve outlet must be connected to a funnel or collection pipe to prevent water spurting onto the floor in case of overpressure in the heating circuit. Otherwise, if the discharge valve cuts in and floods the room, the boiler manufacturer cannot be held liable.

Do not use the water system pipes to earth electrical appliances.

Before installation, carefully clean all the system pipes to remove any residuals or impurities that could affect proper operation of the unit.

Also, a filter must be installed on the system return piping to prevent impurities or sludge from the system clogging and damaging the heat generators.

The filter must be installed when replacing generators in existing systems. The manufacturer declines any liability for damage caused to the generator by failure to install or inadequate installation of this filter.

Carry out the relevant connections according to the diagram in sec. 5.1 and the symbols given on the unit.

System water charcteristics

In the presence of water harder than 25° Fr (1°F = 10ppm $CaCO_3$), the use of suitably treated water is advisable in order to avoid possible scaling in the boiler. The treatment must not in any case reduce the hardness to values below 15°F (Decree 236/88 for uses of water intended for human consumption). Water treatment is indispensable in the case of very large systems or with frequent replenishing of water in the system. If partial or total emptying of the system becomes necessary in these cases, it is advisable to refill it with treated water.

Antifreeze system, antifreeze fluids, additives and inhibitors

The boiler is equipped with an antifreeze system that turns on the boiler in heating mode when the system delivery water temperature falls under 6°C. The device will not come on if the electricity and/or gas supply to the unit are cut off. If it becomes necessary, it is permissible to use antifreeze fluid, additives and inhibitors only if the manufacturer of these fluids or additives guarantees they are suitable for this use and cause no damage to the heat exchanger or other components and/or materials of the boiler unit and system. It is prohibited to use generic antifreeze fluid, additives or inhibitors that are not expressly suited for use in heating systems and compatible with the materials of the boiler unit and system.

Optional kits

The following kits are available on request:

code 042021X0 - 3-SPEED Circulating Pump Kit

code 042047X0 - 3-SPEED HIGH HEAD Circulating Pump Kit

code 042043X0 - MODULATING Circulating Pump Kit

The Kits contain (see fig. 15):

1 **CIRCULATING PUMP** (The diagrams of the circulating pumps are given in sec. 5.5)

2 **3-way COCK - Male 1"1/2 with non-return valve and safety valve**

It enables shutoff (for maintenance operations) in conformity with **ISPESL requirements** and can be used as a local shutoff in the connection of several units in bank. The third way must be connected to an atmospheric discharge manifold. Thus, with the valve in the "open" position, the boiler exchanger is connected to the delivery manifold; and in the "closed" position, through the third way, the exchanger communicates with the atmospheric discharge manifold. This valve therefore also acts as a boiler discharge.

3 COCK Male/Female 1"1/2

In combination with the previous 3-way valve, it enables shutoff (for maintenance operations) in conformity with **ISPESL requirements** and can be used as a local shutoff in the connection of several units in bank.

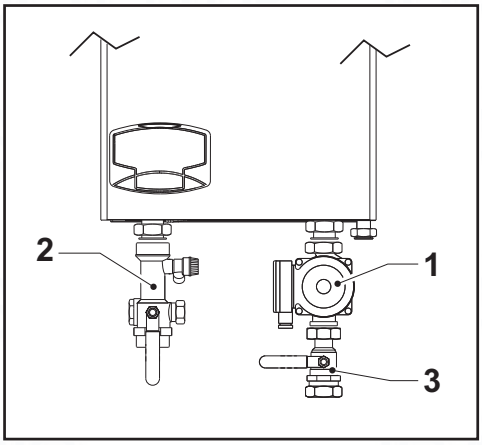

fig. 15 - Contents of optional Kits

Plumbing circuit examples

Key of examples

I*	ISPESL safety devices (When required - not supplied)
D	Hydraulic separator (not supplied)
32	Circulating pump (not supplied)
72	Room thermostat (not supplied)
72b	Room thermostat (not supplied)
95	3-way valve - with spring return: at rest on DHW side (not supplied)
130	Hot water tank circulating pump (not supplied)
138	External probe (not supplied)
139	Remote control (not supplied)
155	Hot water tank temperature probe (not supplied)
298	Cascade temperature sensor (not supplied)
306	Heating system circulating pump (not supplied)
307	Heating system second circulating pump (not supplied)
SM	Delivery probe (supplied with kit FZ4)
TS	Safety thermostat (not supplied)
PZ	Zone pump (not supplied)
FZ4	Zone regulator

Parameters

Each system requires a different parametrisation. Follow the procedure for accessing the two menus, given below; for the parameters to be modified, refer to the tables given alongside the plumbing diagrams.

"Service Menu"

The card Service Menu is accessed by pressing the Reset button for 10 seconds.

Press the Heating buttons to select "tS", "In", "Hi" or "rE"". "tS" means Transparent Parameters Menu, "In" Information Menu, "Hi" History Menu, and "rE" History Menu Reset. Select "tS" and press the Reset button.

The card is equipped with 29 transparent parameters also modifiable from Remote Control (Service Menu).

Press the Heating buttons to scroll the list of parameters in increasing or decreasing order. Press the DHW buttons to modify the value of a parameter: the change will be automatically saved.

Press the Reset button to return to the Service Menu. Press the Reset button for 10 seconds to exit to the card Service Menu.

"System Type Menu"

Press the Summer/Winter button for 10 seconds to access the card System Type Menu.

The card has 21 transparent parameters.

Press the Heating buttons to scroll the list of parameters in increasing or decreasing order. Press the DHW buttons to modify the value of a parameter: the change will be automatically saved.

Press the Summer/Winter button for 10 seconds to exit the card System Type Menu.

One direct heating circuit

Check/Change parameter P02 of the "Transparent Parameters Menu" to **4**.

Change parameter P.02 of the "System Type Menu" to 1.

Change parameter P.09 of the "System Type Menu" to 1.

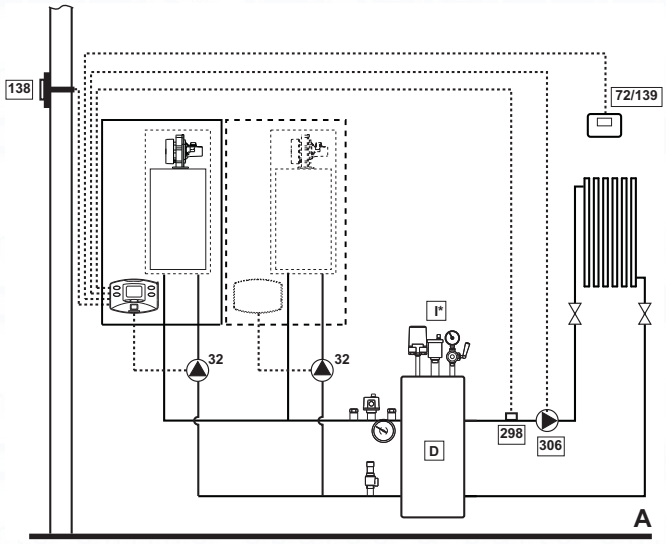

fig. 16

One direct heating circuit and one DHW circuit with pump

Check/Change parameter P02 of the "Transparent Parameters Menu" to **5**.

Change parameter P.02 of the "System Type Menu" to 1.

Change parameter P.09 of the "System Type Menu" to 1.

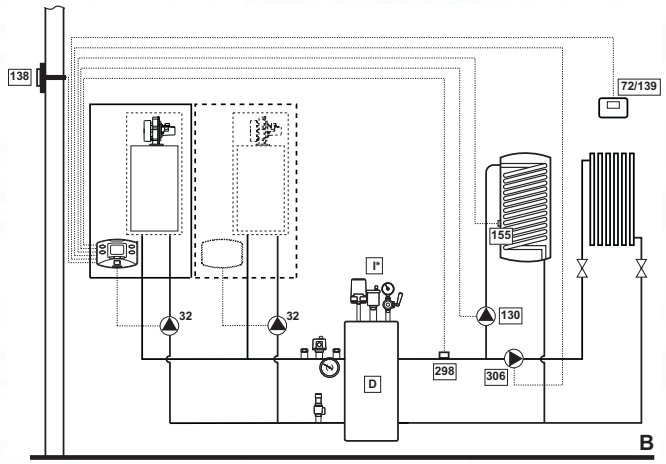

fig. 17

One direct heating circuit and one DHW circuit with diverter valve

Check/Change parameter P02 of the "Transparent Parameters Menu" to **6**.

Change parameter P.02 of the "System Type Menu" to 1.

Change parameter P.09 of the "System Type Menu" to 1.

Change parameter P.11 of the "System Type Menu" to 1.

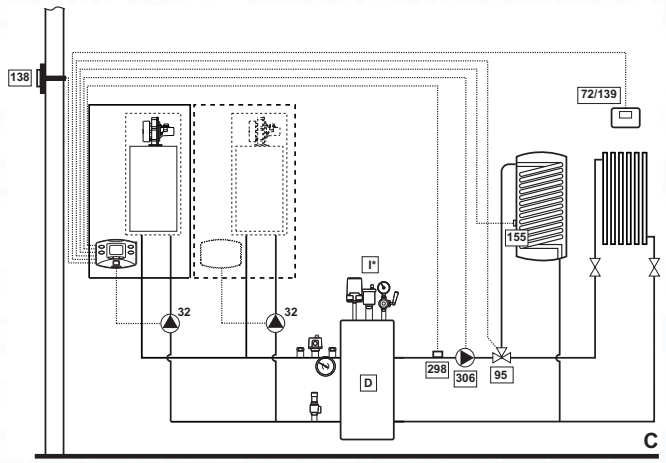

fig. 18

Two direct heating circuits

Check/Change parameter P02 of the "Transparent Parameters Menu" to **4**.

Change parameter P.01 of the "System Type Menu" to 4.

Change parameter P.02 of the "System Type Menu" to 1.

Change parameter P.09 of the "System Type Menu" to 1.

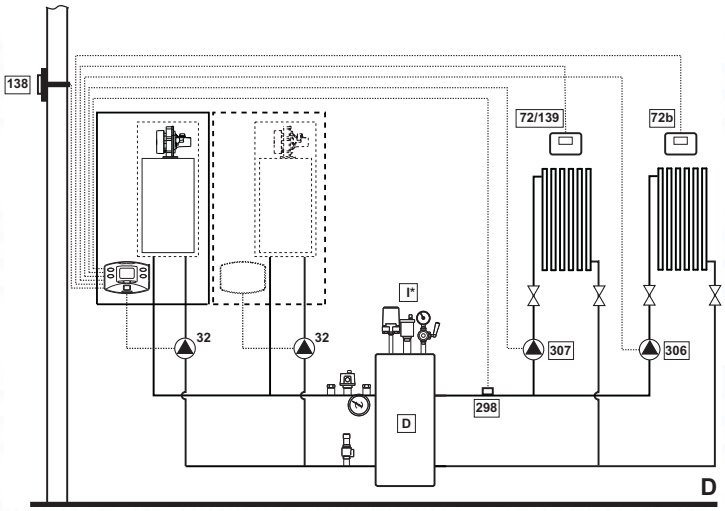

fig. 19

Two mixed heating circuits and one direct heating circuit

Check/Change parameter P02 of the "Transparent Parameters Menu" to **4**.

Change parameter P.02 of the "System Type Menu" to 1.

Change parameter P.09 of the "System Type Menu" to 1.

For the electrical connection and the zone system settings, refer to the "FZ4 zone regulator" handbook

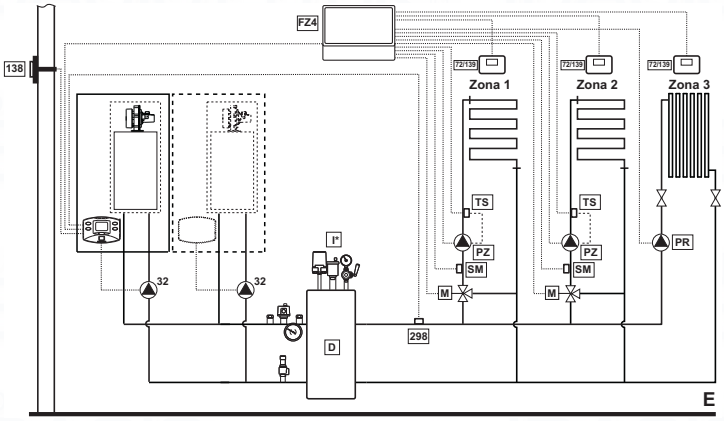

fig. 20

Two mixed heating circuits, one direct heating circuit and one DHW circuit with pump

Check/Change parameter P02 of the "Transparent Parameters Menu" to **5**.

Change parameter P.02 of the "System Type Menu" to 1.

Change parameter P.09 of the "System Type Menu" to 1.

For the electrical connection and the zone system settings, refer to the "FZ4 zone regulator" handbook

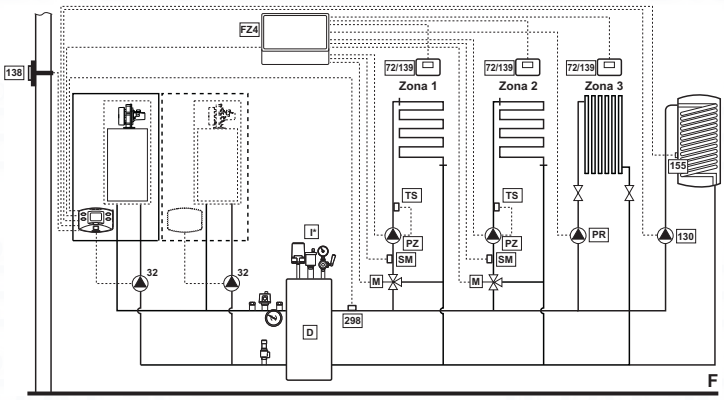

fig. 21

3.4 Gas connection

Before carrying out the connection, make sure the unit is arranged for operation with the type of fuel available and carefully clean all the pipes of the gas system to remove any residues that could affect proper boiler operation.

The gas must be connected to the relevant connection (see fig. 38) in conformity with the current standards, with a rigid metal pipe or with a continuous surface flexible s/steel tube, installing a gas cock between the system and boiler. Make sure all the gas connections are tight. The gas meter capacity must be suitable for the simultaneous use of all the units connected to it. The diameter of the gas pipe leaving the boiler does not determine the diameter of the pipe between the unit and the meter; it must be chosen according to its length and pressure losses, in conformity with the current standards.

Do not use the gas pipes to earth electrical appliances.

In case of connection in cascade, make sure to install a fuel shutoff valve externally with respect to the modules.

3.5 Electrical connections

Connection to the electrical grid

The unit's electrical safety is only guaranteed when correctly connected to an efficient earthing system executed according to current safety standards. Have the efficiency and suitability of the earthing system checked by professionally qualified personnel. The manufacturer is not responsible for any damage caused by failure to earth the system. Also make sure that the electrical system is adequate for the maximum power absorbed by the unit, as specified on the boiler dataplate.

The boiler is prewired and provided with a Y-cable and plug for connection to the electricity line. The connections to the grid must be made with a permanent connection and equipped with a bipolar switch whose contacts have a minimum opening of at least 3 mm, interposing fuses of max. 3A between the boiler and the line. It is important to respect the polarities (LINE: brown wire / NEUTRAL: blue wire / EARTH: yellow-green wire) in making connections to the electrical line. During installation or when changing the power cable, the earth wire must be left 2 cm longer than the others.

The user must never change the unit's power cable. If the cable gets damaged, switch off the unit and have it changed solely by professionally qualified personnel. If changing the electric power cable, use solely **"HAR H05 VV-F"** 3x0.75 mm2 cable with a maximum outside diameter of 8 mm.

Room thermostat (optional)

CAUTION: The room thermostat must have clean contacts. CONNECTING 230 V. TO THE TERMINALS OF THE ROOM THERMOSTAT WILL IRREPARABLY DAMAGE THE ELECTRONIC CARD.

When connecting a remote timer control or a timer switch, do not take the power supply for these devices from their cut-out contacts. Their power supply must be taken with a direct connection from the mains or with batteries, depending on the kind of device.

External probe (optional)

Connect the probe to the respective terminals. The maximum permissible length of the electric cable connecting the boiler - external probe is 50 m. A common 2-wire cable can be used. The external probe should preferably be installed on the North, North-West wall or on the wall facing most of the main living-room. The probe must never be exposed to the early morning sun, and in general (as far as possible) it should not be exposed to direct sunlight; protect it if necessary. In any case, the probe must not be installed near windows, doors, vents, flues or heat sources that could affect the reading.

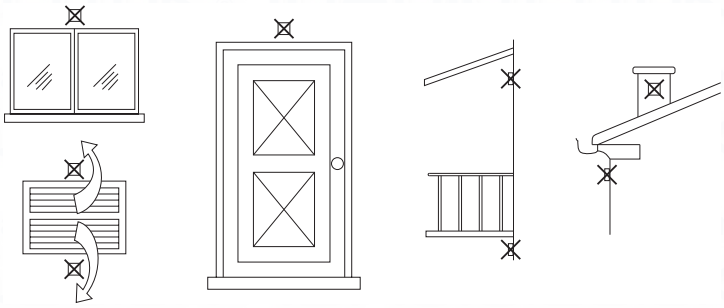

fig. 22 - Inadvisable positioning of external probe

Accessing the electrical terminal block

The electrical terminal block can be accessed after removing the front panel. Make the electrical connections as shown in the wiring diagram in fig. 42 .

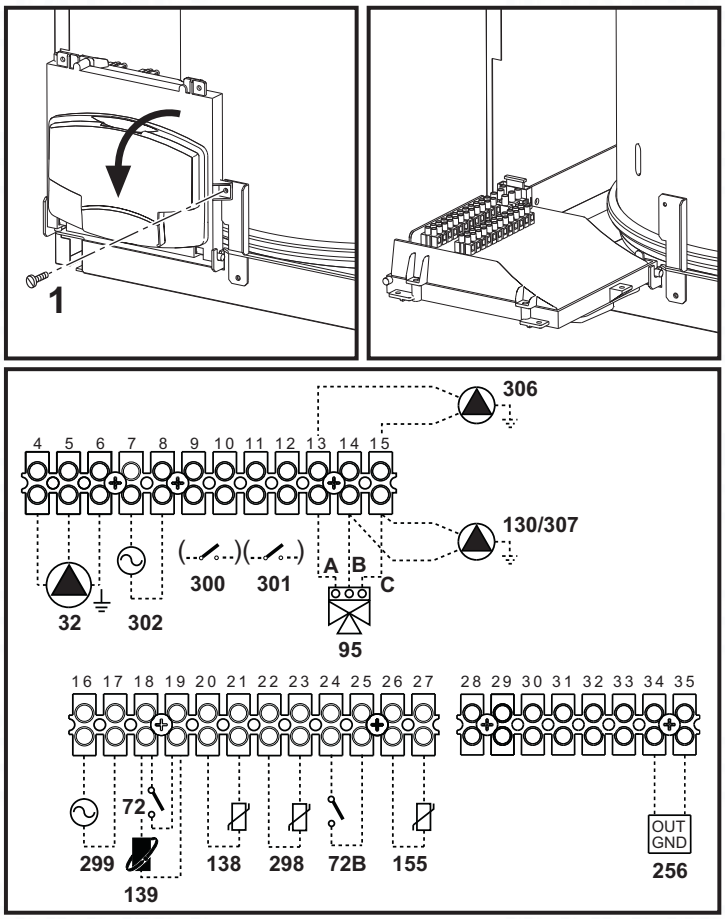

fig. 23 - Electrical terminal block

32	Circulating pump (not supplied)
72	Room thermostat (not supplied)
72b	Room thermostat (not supplied)
95	Diverter valve (not supplied)
	A = Heating phase
	B = DHW phase
	C = Neutral
	NOTE: For valves with 2 wires and spring return, use the connections B and C
130	DHW circulating pump (not supplied)
138	External probe (not supplied)
139	Remote timer control (not supplied)
155	Hot water tank temperature probe (not supplied)
256	Modulating heating circulating pump signal
298	Cascade temperature sensor (not supplied)
299	Input 0-10 Vdc
300	Burner lit contact (voltage-free contact)
301	Fault contact (voltage-free contact)
302	Remote reset input (230 Volt)
306	Heating system circulating pump (not supplied)
307	Heating system second circulating pump (not supplied)

For the connection in cascade

Note: The boiler's electronics can manage up to **6 modules**.

1. Connect the modules as shown in fig. 24 (**example with 4 modules**)

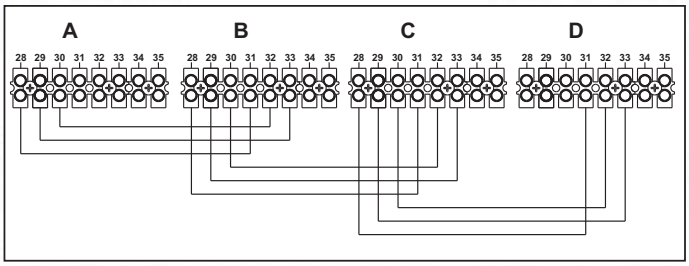

fig. 24 - Connection in cascade

A	1st Module
B	2nd Module
C	3rd Module
D	4th Module

2. Carry out all the electrical connections (terminals 4 to 27) on module no. 1
3. On the remaining modules, only connect the power supply and possible contacts for: burner lit (300), fault contact (301) and remote reset input (302).
4. Switch on the power to the entire cascade
5. After the "FH" procedure, check correct operation of the cascade:
   - Module 1: arrow symbol at top left of the display
   - Module 2: arrow symbol at bottom right of the display
   - Module 3: arrow symbol at bottom right of the display
   - Module 4: arrow symbol at top right of the display

   If this does not occur, disconnect the power and check the wiring in fig. 24.

Settings

All adjustments must be made on all the modules.

Possible faults

If the electrical connection of a module is disconnected for any reason, module 1 will activate fault **F70**.

If the electrical connection of a module is disconnected for any reason, the next module will activate fault **F71**.

3.6 Fume ducts

The unit is a "C type" with sealed chamber and forced draught, the air inlet and fume outlet must be connected to one of the following extraction/suction systems. The unit is approved to operate with all the Cxy and Bxy flue configurations given on the dataplate (some configurations are given by way of example in this section). Some configurations may be expressly limited or not permitted by law, standards or local regulations. Before proceeding with installation, check and carefully observe the above-mentioned prescriptions. Also, comply with the provisions on the positioning of wall and/or roof terminals and the minimum distances from windows, walls, vents, etc.

This C-type unit must be installed using the inlet and fume exhaust ducts supplied by the manufacturer in accordance with UNI-CIG 7129/92. Failure to use them automatically invalidates every warranty and relieves the manufacturer of any liability.

For fume exhaust pipes longer than 1 metre, during installation take into account the natural expansion of the materials when the boiler is operating.

To prevent deformations, leave an expansion space of approx. 2 ÷ 4 mm for every metre of pipe.

Connection with coaxial pipes

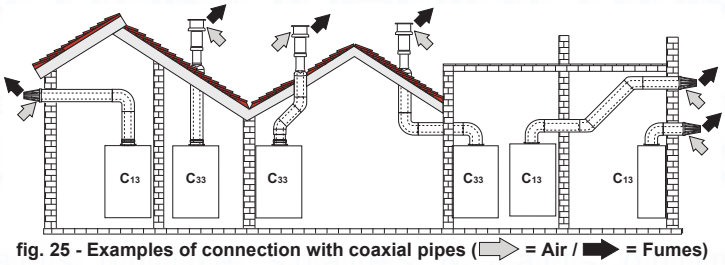

fig. 25 - Examples of connection with coaxial pipes (⇨ = Air / ➡ = Fumes)

For coaxial connection, fit the unit with one of the following starting accessories. For the wall hole dimensions, refer to sec. 5.1. Any horizontal sections of the fume exhaust must be kept sloping slightly towards the boiler, to prevent condensate from flowing back towards the outside and causing dripping.

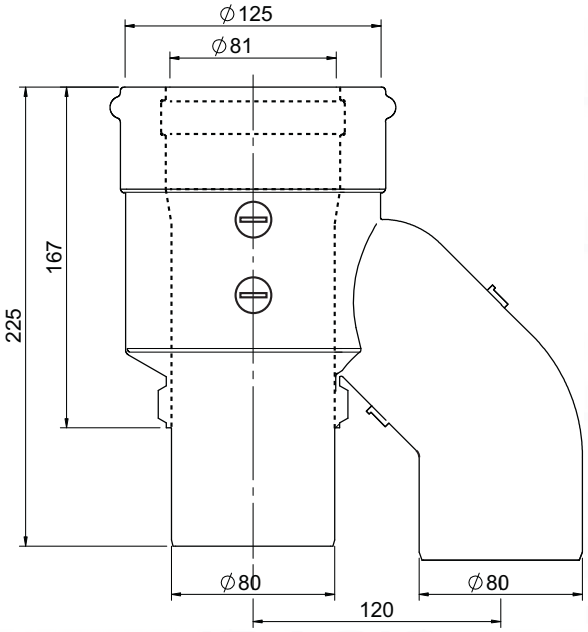

fig. 26 - Starting accessories for coaxial ducts 041007X0

Before proceeding with installation, check with table 2 that the maximum permissible length is not exceeded, bearing in mind that every coaxial bend gives rise to the reduction indicated in the table. For example, a Ø 80/125 duct comprising a 90° bend + 1 horizontal metre has a total equivalent length of 1.5 metres.

Table. 2 - Max. length coaxial ducts

	ENERGY TOP W 70 - W 80	ENERGY TOP W 125
	Coaxial 80/125	Coaxial 80/125
Max. permissible length	**4 m**	**2 m**
Reduction factor 90° bend	0.5 m	0.5 m
Reduction factor 45° bend	0.25 m	0.25 m

Connection with separate pipes

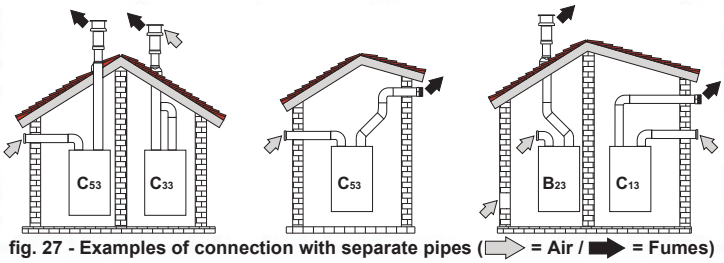

fig. 27 - Examples of connection with separate pipes (⇨ = Air / ➡ = Fumes)

Separate Ø80 ducts can be connected directly to the unit.

Before proceeding with installation, make sure the maximum permissible length has not been exceeded, by means of a simple calculation:

1. Establish the layout of the system of split flues, including accessories and outlet terminals.
2. Consult the table 4 and identify the losses in m_{eq} (equivalent metres) of every component, according to the installation position.
3. Check that the sum total of losses is less than or equal to the maximum permissible length in table 3.

Table. 3 - Max. length separate ducts

	Separate ducts	
	ENERGY TOP W 70 - W 80	ENERGY TOP W 125
Max. permissible length	20 m_{eq}	10 m_{eq}

Table. 4 - Accessories

				Losses in m_{eq}		
				Air inlet	Fume exhaust	
					Vertical	Horizontal
Ø 80	**PIPE**	1 m M/F	1KWMA83W	1.0	1.6	2.0
	BEND	45° M/F	1KWMA65W	1.2	1.8	
		90° M/F	1KWMA01W	1.5	2.0	
	PIPE SECTION	with test point	1KWMA70W	0.3	0.3	
	TERMINAL	air, wall	1KWMA85A	2.0	-	
		fumes, wall with antiwind	1KWMA86A	-	5.0	

3.7 Condensate drain connection

The boiler is equipped with a trap to drain condensate. Carry out the following instructions for fitting.

1. Fix the support bracket "A" to the bottom of the boiler.
2. Connect the preformed black tube "B" to the condensate drain "S" on the bottom of the boiler, fixing it with a clamp.
3. Remove the trap ring nut "C" and insert the preformed black tube "B" in the special opening, making sure to fit the seal "D".
4. Refit the trap ring nut, insert it in the bracket and fix with the special clip "E".
5. Connect the flexible tube "F" from the trap to the condensate drain system.

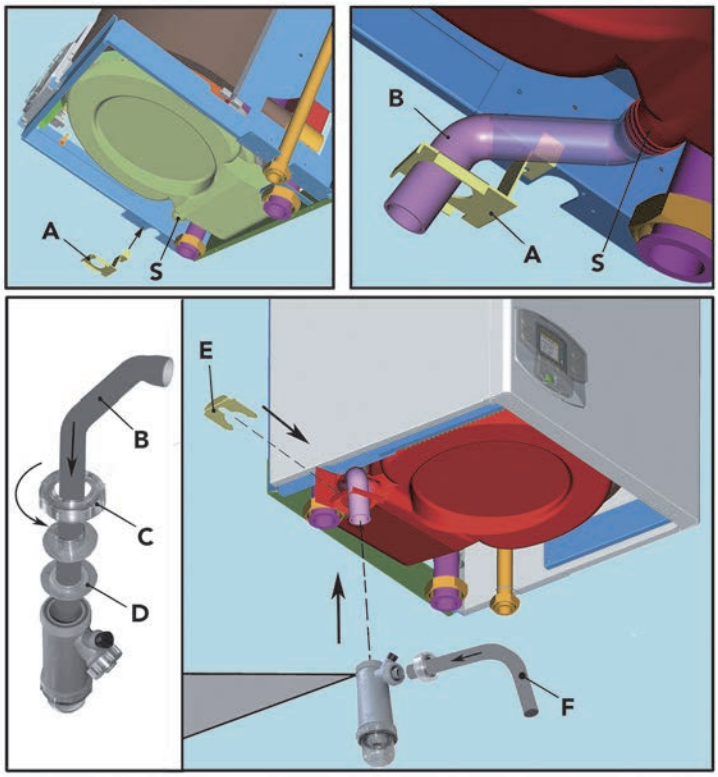

fig. 28 - Condensate drain connection

4. SERVICE AND MAINTENANCE

All adjustment, conversion, startup and maintenance operations described below must only be carried out by Qualified Personnel (meeting the professional technical requirements prescribed by current regulations) such as those of the Local After-Sales Technical Service.

FERROLI declines any liability for damage and/or injury caused by unqualified and unauthorised persons tampering with the unit.

4.1 Adjustments

Gas conversion

The unit can operate on Natural Gas or LPG and is factory-set for use with one of these two gases, as clearly shown on the packing and on the dataplate. Whenever a different gas to that for which the unit is set has to be used, the special conversion kit will be required, proceeding as follows:

1. Disconnect the power supply to the boiler.
2. Remove the casing.
3. Detach the electrical connections from the gas valve controller.
4. Unscrew the gas valve (**e**) fixing ring fig. 29"A"fig. 30.
5. Undo the two fixing screws **"B"** and remove the fan assembly as indicated in fig. 29 for the model **ENERGY TOP W 70 - W 80** and in fig. 30 for the model **ENERGY TOP W 125**.

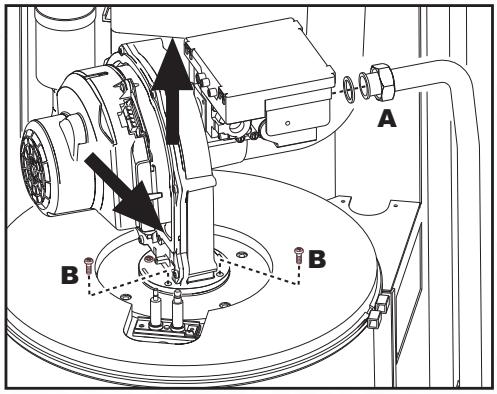

fig. 29 - model ENERGY TOP W 70 - W 80

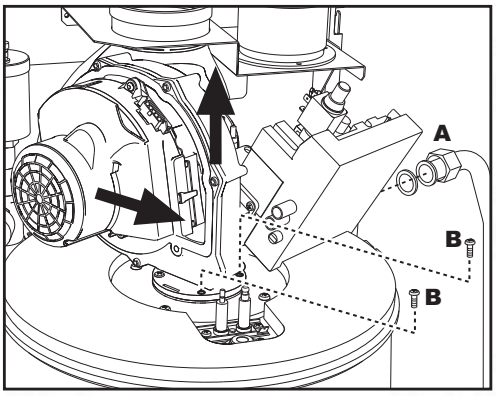

fig. 30 - model ENERGY TOP W 125

6. Undo the screws **"C"** and remove the fan **"D"** (fig. 31 - only model **ENERGY TOP W 125**)

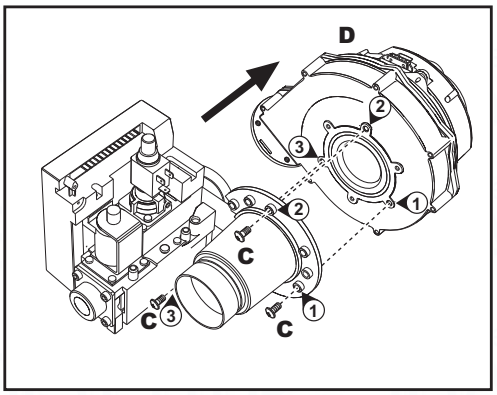

fig. 31 - model ENERGY TOP W 125

7. Undo the fixing screws **"E"** (fig. 32 model **ENERGY TOP W 70 - W 80** and fig. 33 model **ENERGY TOP W 125**) and remove the gas valve.

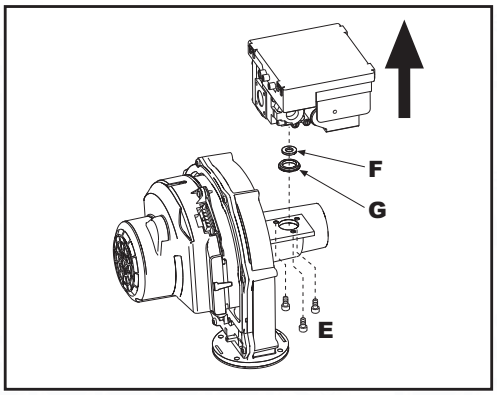

fig. 32 - model ENERGY TOP W 70 - W 80

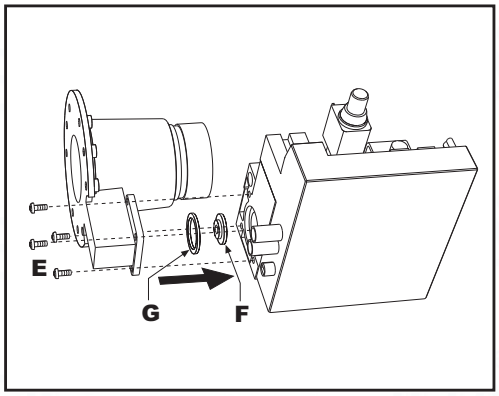

fig. 33 - model ENERGY TOP W 125

8. Replace the gas nozzle **"F"** (see fig. 32 for the model **ENERGY TOP W 70 - W 80** and fig. 33 the model **ENERGY TOP W 125**) with the one contained in the conversion kit, positioning it inside the seal **"G"**. Refit the parts and check the tightness.
9. Modify the parameter for the type of gas:
   - put the boiler in standby mode
   - press the DHW buttons (details 1 and 2 - fig. 1) together for 10 seconds: the display shows "**P01**" flashing.
   - press the DHW buttons (details 1 and 2 - fig. 1) together to set the parameter **00** (for natural gas) or **01** (for LPG).
   - press the DHW buttons (details 1 and 2 - fig. 1) together for 10 seconds. The boiler will return to standby mode
10. Apply the label, contained in the conversion kit, near the dataplate.
11. Using a combustion analyser connected to the boiler fume outlet, make sure the CO_2 content in the fumes, with the boiler operating at max. and min. output, complies with that given in the technical data table for the corresponding type of gas.

TEST mode activation

Press the heating buttons **+/-** (details 3 and 4 - fig. 1) together for 5 seconds to activate **TEST**mode. The boiler lights at the maximum heating power (Range Rated) set as described in the following section.

The heating symbol (detail 13 - fig. 1) and DHW symbol (detail 9 - fig. 1) flash; the heating power will appear alongside.

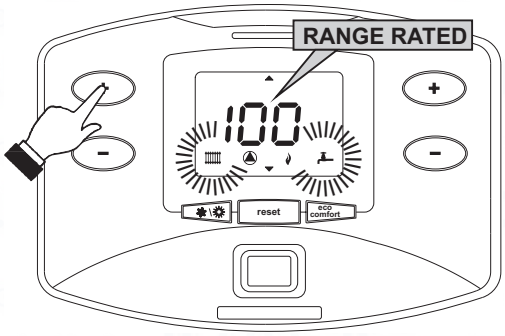

fig. 34 - TEST mode (heating power = 100%)

To deactivate Test mode, repeat the activation sequence.

The TEST mode is automatically disabled in any case after 15 minutes.

Heating Capacity Adjustment (RANGE RATED)

This is a **"RANGE RATED"** boiler (according to EN 483) and can be adjusted to the system's thermal requirement by setting the maximum heating capacity for operation in heating mode, as follows:

- Put the boiler in TEST mode (see sec. 4.1).
- Press the **heating buttons** (details 3 and 4 - fig. 1) to increase or decrease the power (min. = 00 - max. = 100). See the diagram "Heating Capacity Adjustment" (fig. 35).
- Press the **reset button** (detail 8 - fig. 1) within 5 seconds and the maximum heating capacity will remain that just set. Exit TEST mode (see sec. 4.1).

THE HEATING CAPACITY ADJUSTMENT THUS SET ENSURES KEEPING OF THE EFFICIENCY VALUES DECLARED ON cap. 5.4

Heating power adjustment diagram

A = kW - **B =** Electronic Board Parameter

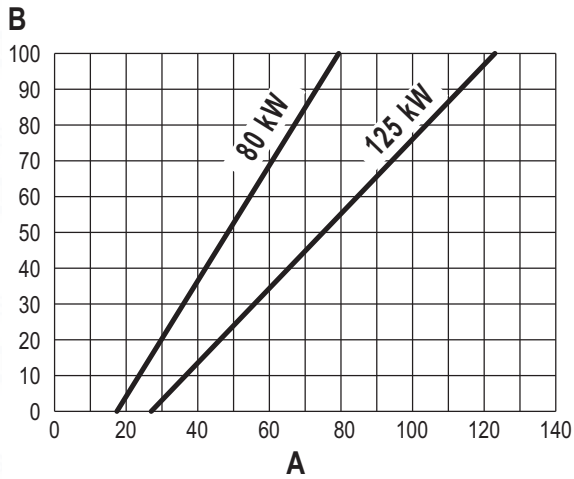

fig. 35

4.2 Start-up

Checks to be made at first lighting, and after all maintenance operations that involved disconnection from the systems or an operation on safety devices or parts of the boiler:

Before lighting the boiler

- Open any on-off valves between the boiler and the systems.
- Check the tightness of the gas system, proceeding with caution and using a soap and water solution to detect any leaks in connections.
- Check correct prefilling of the expansion tank (ref. sec. 5.4).
- Fill the water system and make sure all air contained in the boiler and the system has been vented, by opening the air vent valve on the boiler and any vent valves on the system.
- Fill the condensate trap and check correct connection of the condensate elimination system.
- Make sure there are no water leaks in the system, DHW circuits, connections or boiler.
- Check correct connection of the electrical system and efficiency of the earthing system
- Make sure the gas pressure value for heating is that required.
- Make sure there are no flammable liquids or materials in the immediate vicinity of the boiler

Checks during operation

- Turn the unit on as described in sec. 2.3.
- Make sure the fuel circuit and water systems are tight.
- Check the efficiency of the flue and air-fume ducts while the boiler is working.
- Check the correct tightness and functionality of the condensate elimination system and trap.
- Make sure the water is circulating properly between the boiler and the systems.
- Make sure the gas valve modulates correctly in the heating and domestic hot water production phases.
- Check proper boiler lighting by doing several tests, turning it on and off with the room thermostat or remote control.
- Using a combustion analyser connected to the boiler fume outlet, check that the CO_2 content in the fumes, with the boiler operating at max. and min. output, corresponds to that given in the technical data table for the corresponding type of gas.
- Make sure the fuel consumption indicated on the meter matches that given in the technical data table on sec. 5.4.
- Check the correct programming of the parameters and carry out any necessary customization (compensation curve, power, temperatures, etc.).

4.3 Maintenance

Periodical check

To keep the unit working properly over time, it is necessary to have qualified personnel make an annual check that includes the following tests:

- The control and safety devices (gas valve, flow meter, thermostats, etc.) must function correctly.
- The fume extraction circuit must be fully efficient.
- The airtight chamber must be sealed
- The air-fume end piece and ducts must be free of obstructions and leaks
- The condensate evacuation system must be efficient with no leakage or obstructions.
- The burner and exchanger must be clean and free of scale. When cleaning, do not use chemical products or wire brushes.
- The electrode must be free of scale and properly positioned.
- The gas and water systems must be airtight.
- The water pressure in the cold water system must be about 1 bar; otherwise, bring it to that value.
- The circulation pump must not be blocked.
- The expansion tank must be filled.
- The gas flow and pressure must correspond to that given in the respective tables.

The boiler casing, panel and aesthetic parts can be cleaned with a soft damp cloth, possibly soaked in soapy water. Do not use any abrasive detergents and solvents.

Opening the casing

To open the boiler casing (fig. 36):

1. Undo the screws **(A)**
2. Open, turning the casing **(B)**
3. Lift and remove the casing **(B)**

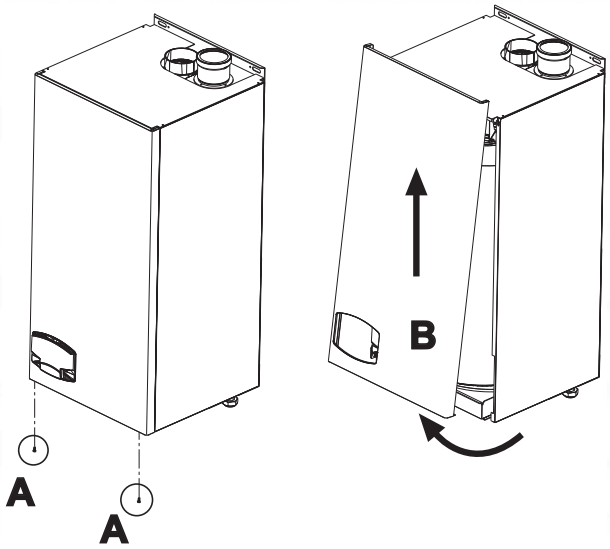

fig. 36 - Opening the casing

Combustion analysis

Combustion can be analysed through the air sampling point (**detail 2**) and fume sampling point (**detail 1**) shown in fig. 37.

To make the measurement, it is necessary to:

1. Open the air and fume sampling points
2. Insert the probes
3. Press the **"+"** and **"-"** buttons for 5 seconds to activate the TEST mode
4. Wait 10 minutes for the boiler to stabilise
5. Take the measurement

For natural gas the CO_2 reading must be between 8.7 and 9%.

For LPG the CO_2 reading must be between 9.5 and 10%.

Analyses made with an unstabilised boiler can cause measurement errors.

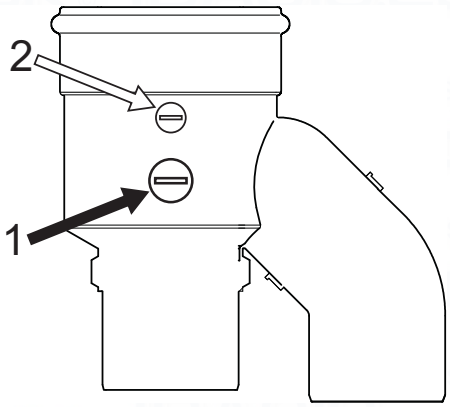

fig. 37 - Combustion analysis

4.4 Troubleshooting

Diagnostics

The boiler is equipped with an advanced self-diagnosis system. In case of a boiler fault, the display will flash together with the fault symbol (detail 20 - fig. 1) indicating the fault code.

There are faults that cause permanent shutdown (marked with the letter "**A**"): to restore operation just press the **RESET** button (detail 8 - fig. 1) for 1 second or RESET on the optional remote timer control if installed; if the boiler fails to start, it is necessary to firstly eliminate the fault.

Other faults (marked with the letter "**F**") cause temporary shutdowns that are automatically reset as soon as the value returns within the boiler's normal working range, except for fault **F37** which is reset by turning the unit off and then on again with button **14** of fig. 1.

Table of faults

Table. 5 - List of faults

Fault code	Fault	Possible cause	Cure
A01	No burner ignition	**EXCHANGER SAFETY THERMOSTAT ACTIVATED**	**CHECK THE BOILER SHELL AND CLEAN IT IF NECESSARY**
			Check the thermostat and replace it if necessary
			Check the thermostat wiring
		No gas	Check the regular gas flow to the boiler and that the air has been eliminated from the pipes
		Ignition/detection electrode fault	Check the wiring of the electrode and that it is correctly positioned and free of any deposits
		Faulty gas valve	Check the gas valve and replace it if necessary
		Insufficient gas supply pressure	Check the gas supply pressure
		Trap blocked	Check the trap and clean it if necessary
A02	Flame present signal with burner off	Electrode fault	Check the ionisation electrode wiring
		Card fault	Check the card
A03	Overtemperature protection activated	Heating sensor damaged	Check the correct positioning and operation of the heating sensor
		No water circulation in the system	Check the circulating pump
		Air in the system	Vent the system
A04	Fume extraction duct safety device activated	Fault F07 generated 3 times in the last 24 hours	See fault F07
A05	Fan protection activated	Fault F15 generated for 1 hour (consecutive)	See fault F15
A06	No flame after ignition stage (6 times in 4 minutes)	Ionisation electrode fault	Check the position of the ionisation electrode and replace it if necessary
		Flame unstable	Check the burner
		Gas valve Offset fault	Check the Offset adjustment at minimum power
		air/fume ducts obstructed	Remove the obstruction from the flue, fume extraction ducts and air inlet and terminals
		Trap blocked	Check the trap and clean it if necessary
F07	High fume temperature	Flue partially obstructed or insufficient	Check the efficiency of the flue, fume extraction ducts and outlet terminal
		Fume sensor position	Check the correct positioning and operation of the fume sensor
F10	Delivery sensor 1 fault	Sensor damaged	Check the wiring or replace the sensor
		Wiring shorted	
		Wiring disconnected	
F11	Return sensor fault	Sensor damaged	Check the wiring or replace the sensor
		Wiring shorted	
		Wiring disconnected	
F12	DHW sensor fault	Sensor damaged	Check the wiring or replace the sensor
		Wiring shorted	
		Wiring disconnected	
F13	Fume sensor fault	Sensor damaged	Check the wiring or replace the sensor
		Wiring shorted	
		Wiring disconnected	
F14	Delivery sensor 2 fault	Sensor damaged	Check the wiring or replace the sensor
		Wiring shorted	
		Wiring disconnected	
F15	Fan fault	No 230V power supply	Check the 3-pin connector wiring
		Tachometric signal interrupted	Check the 5-pin connector wiring
		Fan damaged	Check the fan
F34	Supply voltage under 170V	Electric mains trouble	Check the electrical system
F35	Faulty mains frequency	Electric mains trouble	Check the electrical system
F37	Flowswitch or pressure switch contact open	Insufficient system pressure or circulation	Check the system water pressure or for air in the system
		Circulating pump not working	Check the circulating pump
		Wrong card parameter setting	Check the card parameter and modify it if necessary
F38	Flowswitch contact blocked closed	Flowswitch dirty or blocked	Clean the flowswitch or replace it if necessary
F39	External probe fault	Probe damaged or wiring shorted	Check the wiring or replace the sensor
		Probe disconnected after activating the sliding temperature	Reconnect the external probe or disable the sliding temperature
A41	Sensor positioning	Delivery sensor disconnected from the pipe	Check the correct positioning and operation of the heating sensor
A42	Heating sensor fault	Sensor damaged	Replace the sensor
F42	Heating sensor fault	Sensor damaged	Replace the sensor
F50	Cascade temperature sensor fault	Sensor damaged	Check the wiring or replace the sensor
		Wiring shorted	
		Wiring disconnected	
A61	Controller DBM12 fault	Controller DBM12 internal error	Check the earth connection and replace the controller if necessary.
A62	No communication between controller and gas valve	Controller not connected	Connect the controller to the gas valve
		Valve damaged	Replace the valve
A63 A64 A65 F66	Controller DBM12 fault	Controller DBM12 internal error	Check the earth connection and replace the controller if necessary.

5. TECHNICAL DATA AND CHARACTERISTICS

Key of figures cap. 5

7 Gas inlet
10 System delivery
11 System return
16 Fan
22 Main burner
29 Fume outlet manifold
32 Heating circulating pump (not supplied)
36 Automatic air vent
38 Flow switch
44 Gas valve
72 Room thermostat (not supplied)
72b Second room thermostat (not supplied)
81 Ignition electrode
82 Detection electrode
95 Diverter valve (not supplied)

A = Heating phase

B = DHW phase

C = Neutral

NOTE: For valves with 2 wires and spring return, use the connections B and C

98 Switch
114 Water pressure switch
130 DHW circulating pump (not supplied)
138 External probe (not supplied)
139 Remote timer control (not supplied)
154 Condensate drain pipe
155 Hot water tank temperature probe (not supplied)
186 Return sensor
191 Fume temperature sensor
193 Trap
196 Condensate tray
215 Air inlet reducer
220 Ignition card
256 Modulating heating circulating pump signal
278 Double sensor (Safety + Heating)
298 Cascade temperature sensor (not supplied)
299 Input 0-10 Vdc
300 Burner lit contact (voltage-free contact)
301 Fault contact (voltage-free contact)
302 Remote reset input (230 Volt)
306 Heating system circulating pump (not supplied)
307 Heating system second circulating pump (not supplied)
345 Exchanger safety thermostat

5.1 Dimensions and connections

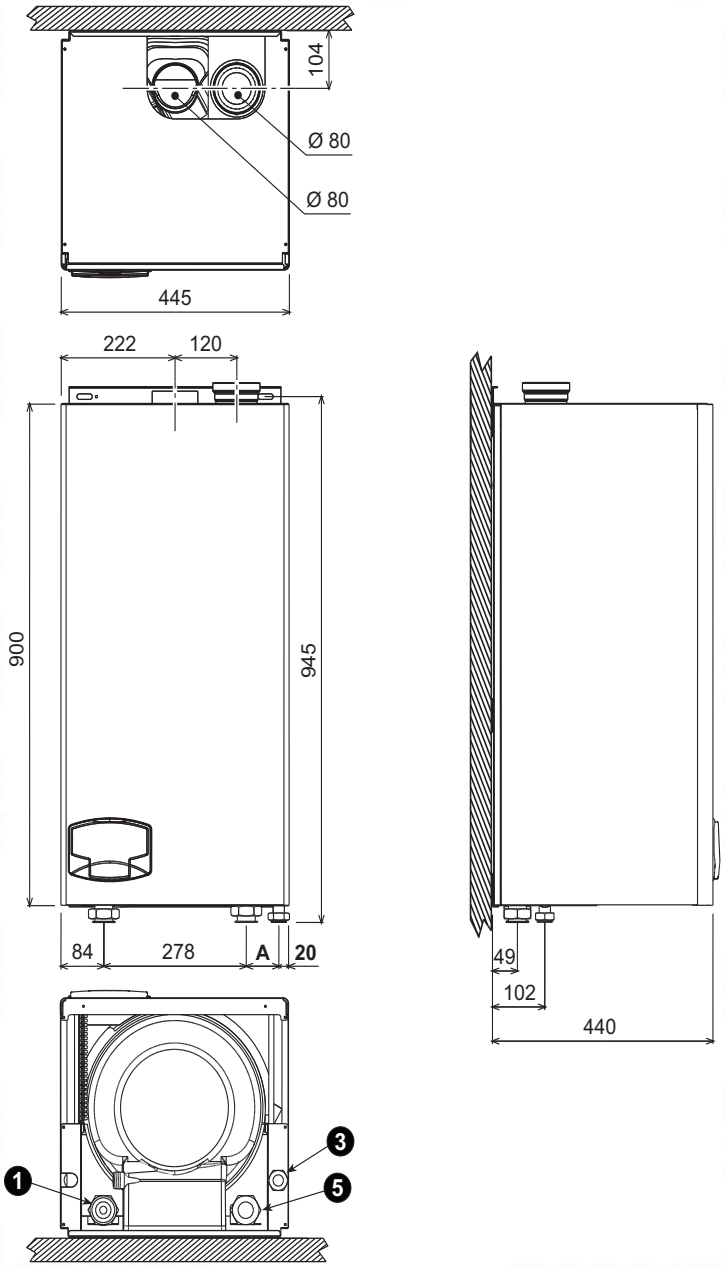

fig. 38 - Dimensions and connections

	A
ENERGY TOP W 70 - W 80	65
ENERGY TOP W 125	63

1 = Heating system delivery - 1" 1/2 F
3 = Gas inlet - 1" M
5 = Heating system return - 1" 1/2 F

5.2 General view and main components

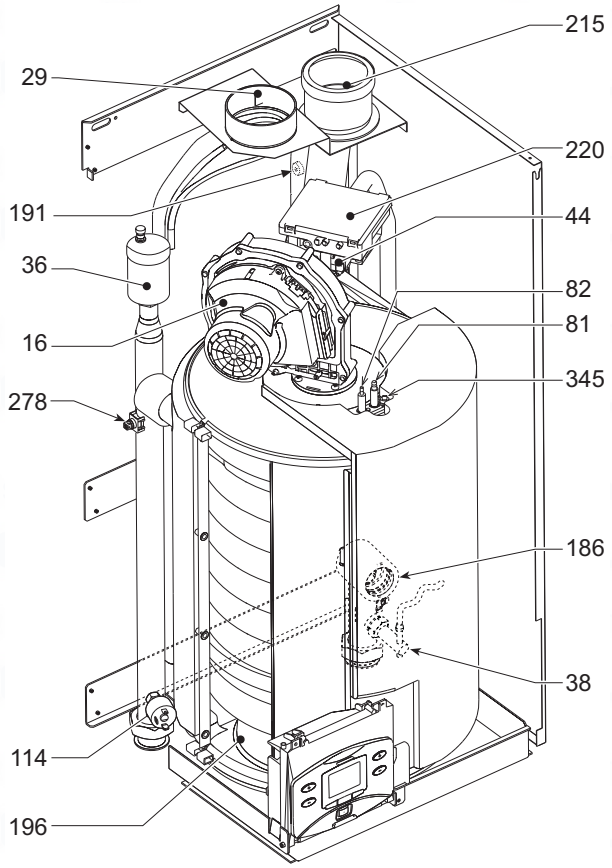

fig. 39 - General view ENERGY TOP W 70 - W 80

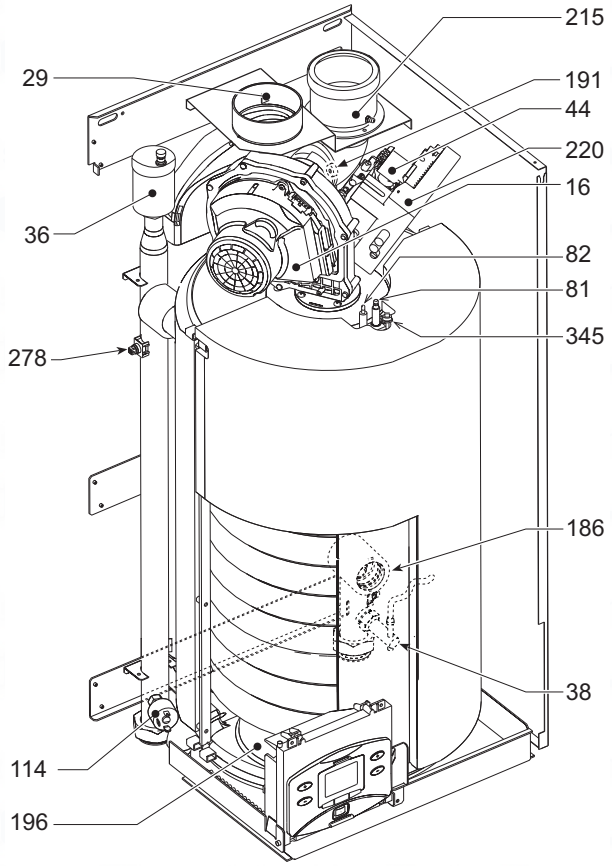

fig. 40 - General view ENERGY TOP W 125

5.3 Water circuit

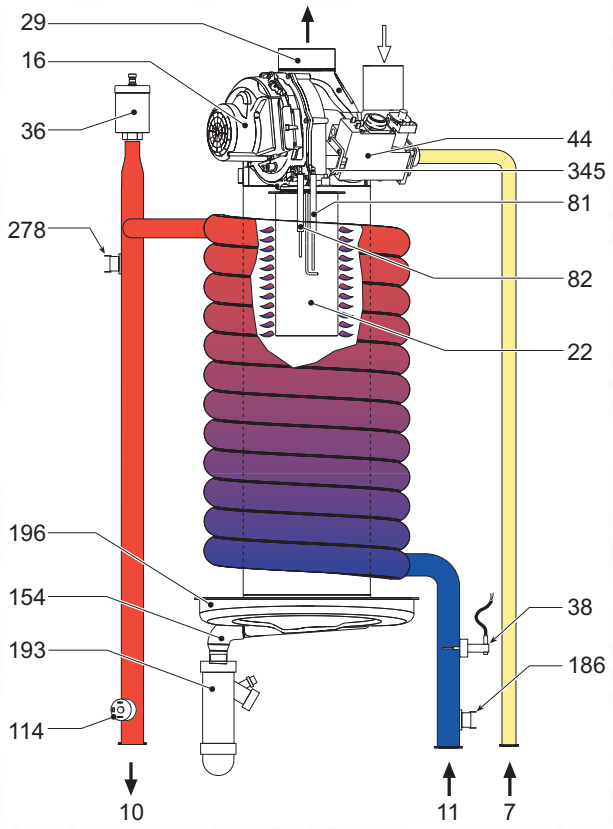

fig. 41 - Water circuit

5.4 Technical data table

Factory settings

The unit is factory-set to 80% power.

Technical data

The column on the right gives the abbreviation used on the dataplate.

Data	Unit	Value	Value	Value	
Model		ENERGY TOP W 70	ENERGY TOP W 80	ENERGY TOP W 125	
Max. heating capacity	kW	65.9	75	116	(Q)
Min. heating capacity	kW	17	17	25	(Q)
Max. Heat Output in heating (80/60°C)	kW	64.6	73.5	113.7	(P)
Min. Heat Output in heating (80/60°C)	kW	16.7	16.7	24.6	(P)
Max. Heat Output in heating (50/30°C)	kW	69.9	79.5	123	(P)
Min. Heat Output in heating (50/30°C)	kW	18.3	18.3	26.9	(P)
Efficiency Pmax (80/60°C)	%	98	98	98	
Efficiency Pmin (80/60°C)	%	98.5	98.5	98.5	
Efficiency Pmax (50/30°C)	%	106	106	106	
Efficiency Pmin (50/30°C)	%	107.5	107.5	107.5	
Efficiency 30%	%	109	109	109	
Gas baffle (G20)	Ø	8.50	8.50	9.4	
Gas supply pressure G20	mbar	20	20	20	
CO_2 max. (G20)	%	9	9	9	
CO_2 min. (G20)	%	8.5	8.5	8.5	
Max. gas delivery G20	m^3/h	6.97	7.94	12.38	
Min. gas delivery G20	m^3/h	1.8	1.8	2.65	
Gas baffle (G31)	Ø	5.8	5.8	7.0	
Gas supply pressure G31	mbar	37	37	37	
CO_2 max. (G31)	%	10	10	10	
CO_2 min. (G31)	%	9.2	9.2	9.2	
Max. gas delivery G31	kg/h	5.16	5.87	9.08	
Min. gas delivery G31	kg/h	1.33	1.33	1.96	

Efficiency class Directive 92/42 EEC	-	★★★★			
NOx emission class	-	5	5	5	(NOx)
Max. fume temperature (80°C - 60°C)	°C	65	65	65	
Min. fume temperature (80°C - 60°C)	°C	60	60	60	
Max. fume temperature (50°C - 30°C)	°C	43	43	45	
Min. fume temperature (50°C - 30°C)	°C	33	33	34	
Max. fume flowrate	kg/h	127.5	127.5	197	
Min. fume flowrate	kg/h	31.4	31.4	44.7	
Max. working pressure in heating	bar	6	6	6	(PMS)
Min. working pressure in heating	bar	0.8	0.8	0.8	
Max. heating temperature	°C	95	95	95	(tmax)
Heating water content	litres	5	5	7	
Protection rating	IP	X5D	X5D	X5D	
Power supply voltage	V/Hz	230V/50Hz	230V/50Hz	230V/50Hz	
Electrical power input	W	70	95	200	
Empty weight	kg	46	46	51	
Type of unit		C_{13} - C_{23} - C_{33} - C_{43} - C_{53} - C_{63} - C_{83} - B_{23} - B_{33}			
PIN CE		0461BS0879			

5.5 Diagrams

A = Pressure losses model **ENERGY TOP W 70 - W 80**

B = Pressure losses model **ENERGY TOP W 125**

Diagram of pressure losses, boiler shell only

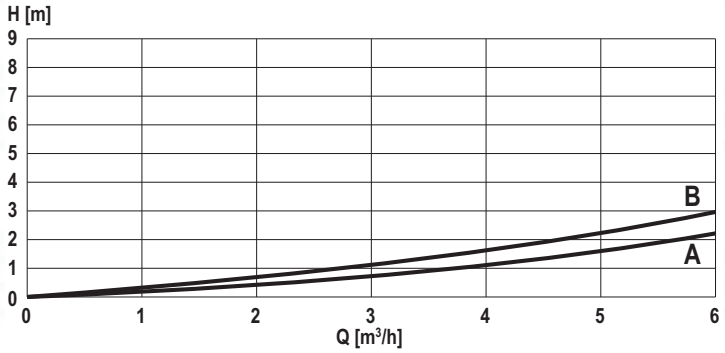

Head and pressure losses with Kit code 042021X0
(3-SPEED Circulating Pump Kit)

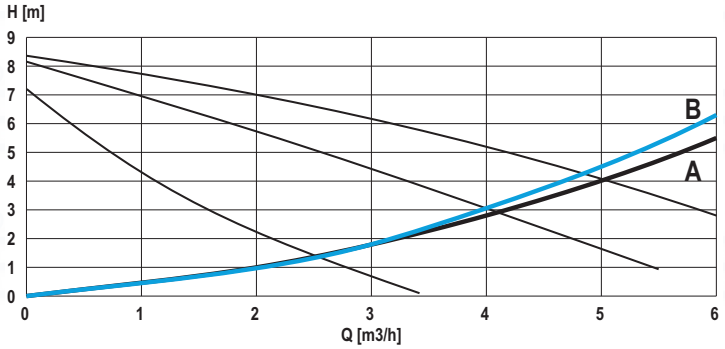

Head and pressure losses with Kit code 042047X0
(3-SPEED HIGH HEAD Circulating Pump Kit)

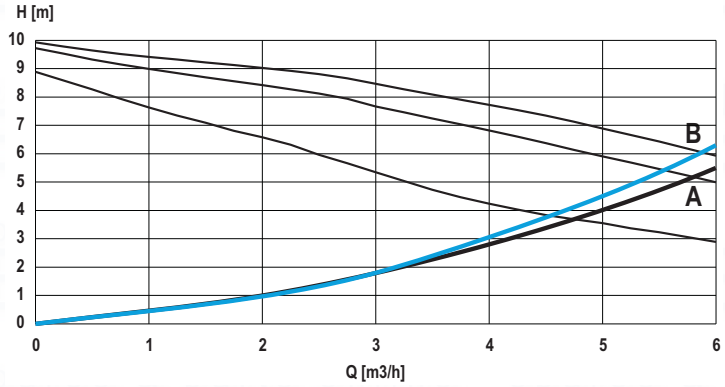

Head and pressure losses with Kit code 042043X0
(MODULATING Circulating Pump Kit)

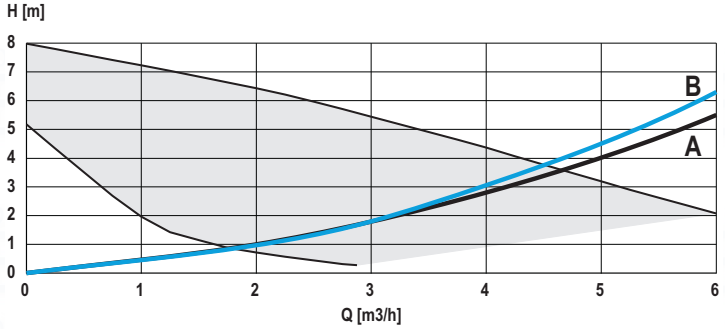

5.6 Wiring diagram

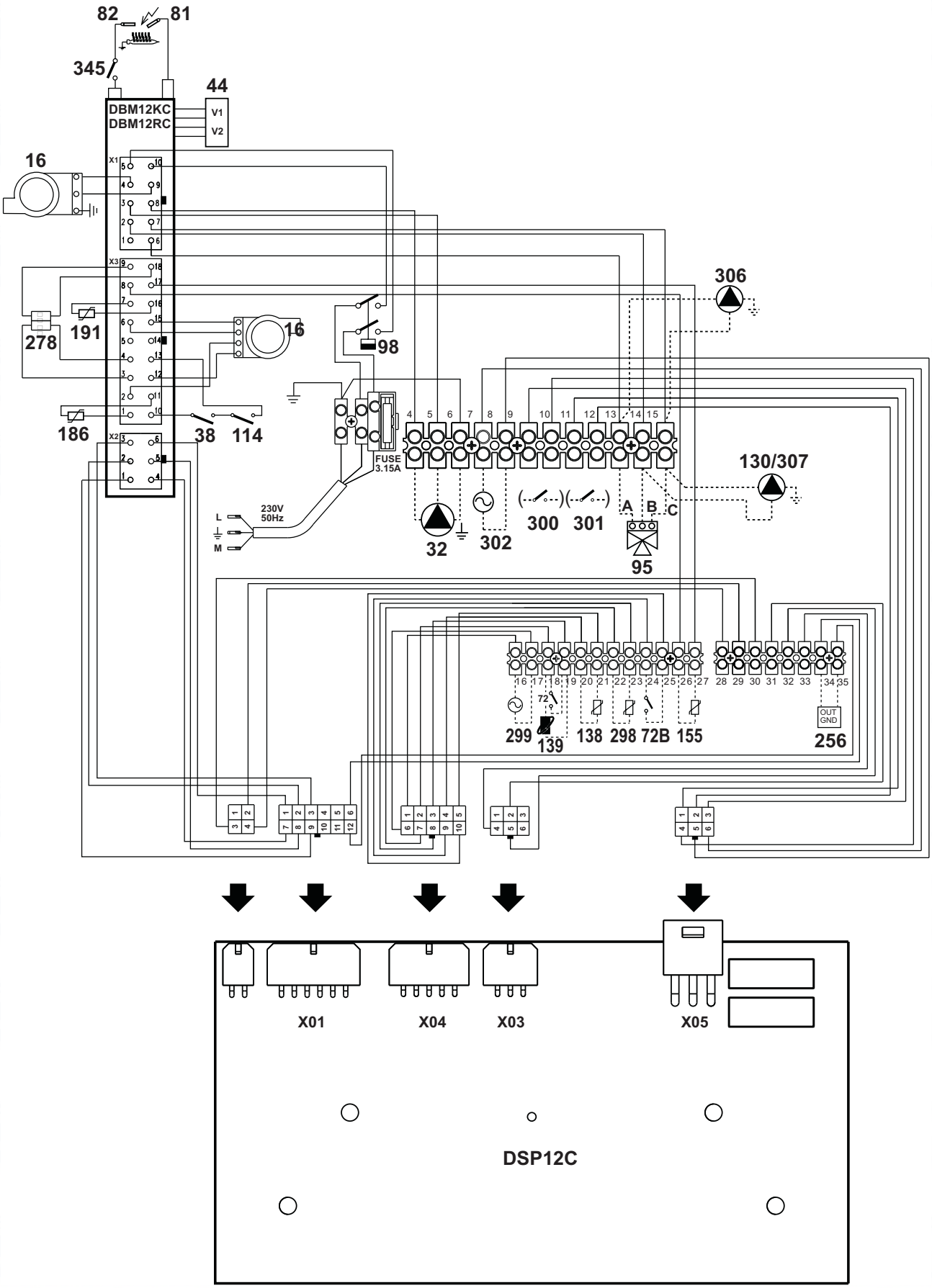

fig. 42 - Wiring diagram

IT Dichiarazione di conformità

CE

Il costruttore: FERROLI S.p.A.

Indirizzo: Via Ritonda 78/a 37047 San Bonifacio VR

dichiara che questo apparecchio è conforme alle seguenti direttive CEE:

- Direttiva Apparecchi a Gas 2009/142
- Direttiva Rendimenti 92/42
- Direttiva Bassa Tensione 2006/95
- Direttiva Compatibilità Elettromagnetica 2004/108

Presidente e Legale rappresentante
Cav. del Lavoro
Dante Ferroli

ES Declaración de conformidad

CE

El fabricante: FERROLI S.p.A.

Dirección: Via Ritonda 78/a 37047 San Bonifacio (Verona)

declara que este equipo satisface las siguientes directivas CEE:

- Directiva de Aparatos de Gas 2009/142
- Directiva de Rendimientos 92/42
- Directiva de Baja Tensión 2006/95
- Directiva de Compatibilidad Electromagnética 2004/108

Presidente y representante legal
Caballero del Trabajo
Dante Ferroli

TR Uygunluk beyani

CE

İmalatçi: FERROLI S.p.A.

Adres: Via Ritonda 78/a 37047 San Bonifacio VR

bu cihazin; asagida yer alan AET(EEC) yönergelerine uygunluk içinde oldugunu beyan etmektedir:

- 2009/142 Gazla çalistirilan üniteler için Yönetmelik
- 92/42 Randiman/Verimlilik Yönetmeligi
- Yönerge 2006/95, Düsük Voltaj
- 2004/108 Elektromanyetik Uygunluk Yönetmeligi

Baskan ve yasal temsilci
İş. Dep.
Dante Ferroli

EN Declaration of conformity

CE

Manufacturer: FERROLI S.p.A.

Address: Via Ritonda 78/a 37047 San Bonifacio VR Italy

declares that this unit complies with the following EU directives:

- Gas Appliance Directive 2009/142
- Efficiency Directive 92/42
- Low Voltage Directive 2006/95
- Electromagnetic Compatibility Directive 2004/108

President and Legal Representative
Cav. del Lavoro
Dante Ferroli

FR Déclaration de conformité

Le constructeur : FERROLI S.p.A.

Adresse: Via Ritonda 78/a 37047 San Bonifacio VR

déclare que cet appareil est conforme aux directives CEE ci-dessous:

- Directives appareils à gaz 2009/142
- Directive rendements 92/42
- Directive basse tension 2006/95
- Directive Compatibilité Electromagnétique 2004/108

Président et fondé de pouvoirs

Cav. du travail

Dante Ferroli

RO Declarație de conformitate

Producător: FERROLI S.p.A.

Adresă: Via Ritonda 78/a 37047 San Bonifacio VR

declară că acest aparat este în conformitate cu următoarele directive CEE:

- Directiva Aparate cu Gaz 2009/142
- Directiva Randament 92/42
- Directiva Joasă Tensiune 2006/95
- Directiva Compatibilitate Electromagnetică 2004/108

Preşedinte şi reprezentant legal
Cavaler al Muncii
Dante Ferroli

RU Декларация соответствия

Изготовитель: FERROLI S.p.A.,

адрес: Via Ritonda 78/a 37047 San Bonifacio VR,

заявляет, что настоящее изделие соответствует следующим директивам CEE:

- Директива по газовым приборам 2009/142
- Директива по К.П.Д. 92/42
- Директива по низкому напряжению 2006/95
- Директива по электромагнитной совместимости 2004/108

Президент и уполномоченный представитель

Кавальере дель лаворо (почетный титул, присуждаемый

государством за заслуги в руководстве промышленностью)

Dante Ferroli

UA Декларація про відповідність

Виробник: компанія FERROLI S.p.A.

за адресою: Via Ritonda 78/a 37047 San Bonifacio VR

заявляє, що цей апарат відповідає усім наступним Директивам ЄС:

- Директива ЄС 2009/142 (Директива про зближення правових норм країн-членів ЄС для газо-розхідних установок)
- Директива ЄС 92/42 (Директива про вимоги КПД для нових водогрійних котлів, працюючих на рідинному і газоподібному паливі)
- Директива ЄС 2006/95 (Директива про зближення правових норм країн-членів ЄС, що стосуються електрообладнання, яке використовується в певних межах напруги)
- Директива ЄС 2004/108 (Директива про приведення у відповідність законодавств країн-членів в області електромагнітної сумісності).

Президент і законний представник
Кавалер праці

Dante Ferroli

spares & parts online
IBASIS.co.uk®

spares & parts online
IBASIS.co.uk®

spares & parts online
IBASIS.CO.UK

FERROLI S.p.A.
Via Ritonda 78/a
37047 San Bonifacio - Verona - ITALY
www.ferroli.it