Ferroli

spares & parts online
IBASIS.co.uk©

T-ONE S HE

cod. 3541E790 – Rev. 00 - 04/2014

CE

INSTRUCTIONS FOR USE INSTALLATION AND MAINTENANCE

"T-ONE 18S HE" GC N° 41-267-43
"T-ONE 25S HE" GC N° 41-267-44
"T-ONE 32S HE" GC N° 41-267-45

IMPORTANT

- **Your "benchmark" Installation, Commissioning and Service Record Log Book is enclosed in the last pages of this manual. "This record must be completed and left with the end user".**
  Ferroli is a member of the Benchmark initiative and fully supports the aims of the programme. Benchmark has been introduced to improve the standards of installation and commissioning of central heating systems in the UK and to encourage the regular servicing of all central heating systems to ensure safety and efficiency. Please see installation and servicing guidelines.
- **"Ferroli declare that no substances harmful to health are contained in the appliance or used during the appliance manufacture".**

- Carefully read the warnings in this instruction booklet since they provide important information on safe installation, use and maintenance.
- This instruction booklet is an integral part of the product and must be carefully kept by the user for future reference.
- If the unit is sold or transferred to another owner or if it is to be moved, always make sure that the booklet accompanies the boiler so that it can be consulted by the new owner and/or installer.
- Installation and maintenance must be carried out by professionally qualified personnel, according to current regulations and the manufacturer's instructions.
- Incorrect installation or poor maintenance can cause damage or physical injury. The manufacturer declines any responsibility for damage caused by errors in installation and use or by failure to follow the manufacturer's instructions.
- Before carrying out any cleaning or maintenance operation, ISOLATE AND DISCONNECT the boiler from the electrical power supply.
- In case the unit breaks down and/or functions poorly, deactivate it, do not make any attempt to repair it or directly intervene. Contact professionally qualified personnel. Any repair/replacement of products must only be carried out by qualified professional personnel using exclusively genuine parts. Failure to comply with the above could affect the safety of the unit.
- Periodical maintenance carried out by qualified personnel is essential for guaranteeing good operation of the unit.
- This unit must only be used for the purpose for which it was designed. Any other use is considered improper and therefore hazardous.
- After removing the packing, check the integrity of the contents. Packing materials must not be left within the reach of children as they are potentially hazardous.
- The unit must not be used by people (including children) with limited physical, sensory or mental abilities or without experience and knowledge of it, unless instructed or supervised in its use by someone responsible for their safety.
- In case of doubt do not use the unit, and contact the supplier.
- The images shown in this manual are a simplified representation of the product. In this representation there may be slight, unimportant differences with the supplied product.
- Whilst every effort is taken to ensure the accuracy of the information contained within these instructions, the details are offered in good faith and the Manufacturer accepts no liability for matters arising as a result of errors and/or omissions.
- The unit and its accessories must be disposed of appropriately, in conformity with the current regulations
- Due to the Manufacturers continuous product research and development, the details contained in this manual may not truly reflect the actual product.

⚠	This symbol indicates **"Caution"** and is placed next to all safety warnings. Strictly follow these instructions to avoid danger and damage to persons, animals and property.
☞	This symbol calls attention to a note or important notice.

Declaration of conformity

CE

Manufacturer: FERROLI S.p.A.
Address: Via Ritonda 78/a 37047 San Bonifacio VR Italy
declares that this unit complies with the following EU directives:

- Gas Appliance Directive 2009/142
- Efficiency Directive 92/42
- Low Voltage Directive 2006/95
- Electromagnetic Compatibility Directive 2004/108

President and Legal Representative
Cav. del Lavoro
Dante Ferroli

1 Instructions 4

1.1 Introduction 4
1.2 Control panel 4
1.3 Turning ON and OFF 5
1.4 Adjustments 6

2 Installation 7

2.1 General Instructions 7
2.2 Place of installation 8
2.3 Plumbing connections 8
2.4 Connection to the gas system 10
2.5 Electrical connections 10
2.6 Flue system 14
2.7 Condensate drain connection 18

3 Service and maintenance 19

3.1 Adjustments 19
3.2 Start-up 20
3.3 Commisioning instructions 20
3.4 Routine servicing, maintenance & repair 21
3.5 Troubleshooting 25

4 Technical data and characteristics 26

4.1 Dimensions and connections 26
4.2 General view and main components 27
4.3 Water circuit 28
4.4 Technical data table 29
4.5 Diagrams 30
4.6 Wiring diagram 31

1. Instructions

1.1 Introduction

Thank you for choosing the **T-ONE S HE**, a **FERROLI** wall-mounted boiler the latest generation appliance, featuring advanced design and cutting-edge technology.

T-ONE S HE is a high-efficiency **condensing pre-mix** appliance for central heating and hot water production, running on natural gas or LPG, generating extremely low emissions.

The boiler is constructed with a stainless steel heat exchanger providing effective condensation of the water vapour contained in the flue gases, permitting extremely high efficiency.

Inside the boiler there is a premix burner with an integral fan, with a large stainless steel surface.

The boiler is totally **room sealed** from the installation room: the air needed for combustion is drawn from outside. The boiler also includes a modulating speed fan, modulating gas valve, pump, expansion vessel, safety valve, flow sensor, dual safety and control temperature sensor, a safety thermostat and a low water pressure switch.

Thanks to the **microprocessor** control and adjustment system with advanced self-diagnosis, unit operation is for the most part automatic. The power for heating is automatically governed by the control system.

The display continuously provides information on the unit's operating status and it is easily possible to obtain additional information on the sensor temperatures, set-points, etc. or configure them. Any operating problems associated with the boiler or system are immediately signalled by the display and, if possible, corrected automatically.

1.2 Control panel

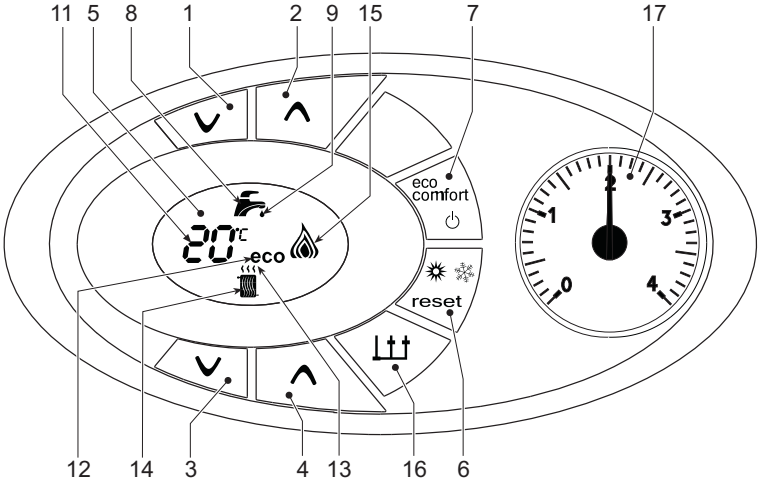

fig. 1 - Control panel

Key

1 = Domestic Hot Water temperature setpoint decreasing button
2 = Domestic Hot Water temperature setpoint increasing button
3 = Central Heating water temperature setpoint decreasing button
4 = Central Heating water temperature setpoint increasing button
5 = LCD Display
6 = Reset
7 = On-Off button
8 = Domestic Hot Water symbol
11 = Multi-function indication (Flashing during heat exchanger protection)
13 = Central Heating mode operation
14 = Central Heating symbol
15 = Burner on and actual load indication (Flashing during flame current supervision)
16 = Service tool connector
17 = Water gauge

Indication during boiler operation

Central Heating mode

The Central Heating heat demand (generated by the Room Thermostat or the Clock) is indicated by the flashing of the Hot Air symbol over the radiator (part. 13 and 14 - fig. 1). The display indicates the actual Central Heating water temperature (part. 11 - fig. 1) and when the required temperature is reached "**d2**" will be displayed.

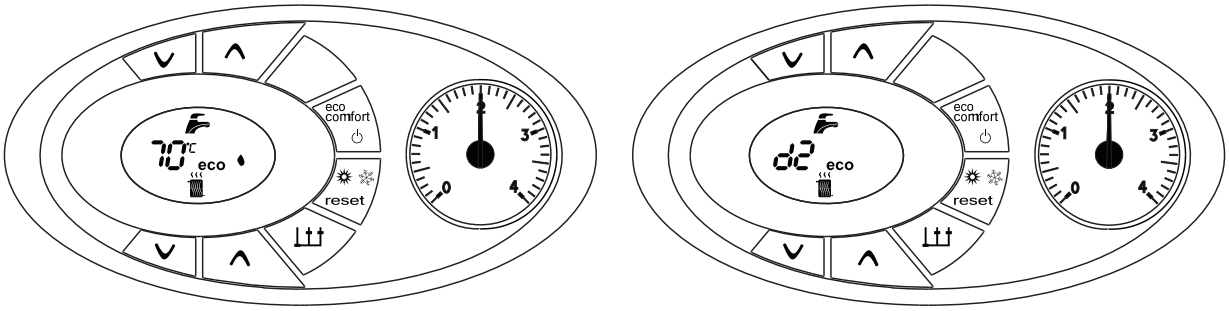

fig. 2

1.3 Turning ON and OFF

Without main power supply

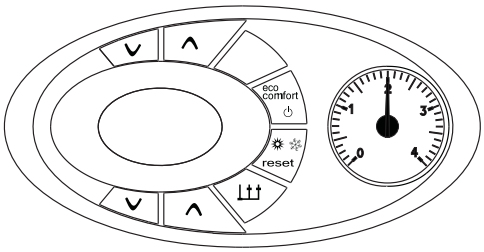

fig. 3 - Boiler without main power supply

To avoid damage caused by freezing during long shutdowns in winter, it is advisable to drain all water from the system.

Ignition

Ensure the power is on to the appliance.

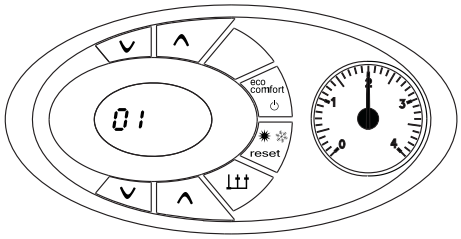

fig. 4 - Ignition

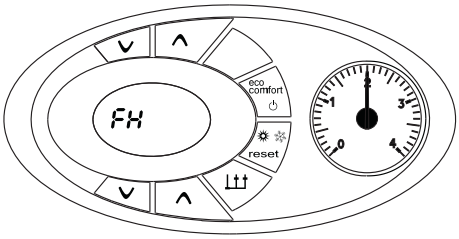

fig. 5 - Air purge

- During the first 5 seconds, the display shows the software version of the pcb.
- For the first 300 seconds, the display shows FH that identifies the Air purge function.
- Open the gas cock on the boiler and purge the air from the pipework upstream of the gas valve.
- When the FH disappears, the boiler is ready to function automatically whenever the external controls are calling for heat.

Turning off

Press the **on/off** button (part. 7 - fig. 1) for 5 seconds.

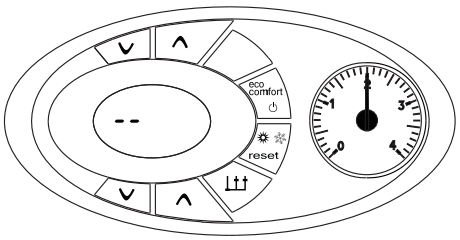

fig. 6 - Turning off

When the boiler is turned off with this key, the p.c.b is still powered, heating operation is disabled and the display is off however the frost protection will still be active.

To totally isolate close the gas cock before the boiler and disconnect electricity supply.

To avoid damage caused by freezing during long shutdowns in winter, it is advisable to drain all water from the system.

To turn boiler on again, press the **on/off** button (part. 7 - fig. 1) for 5 seconds

The boiler is ready to function automatically whenever the external controls are calling for heat.

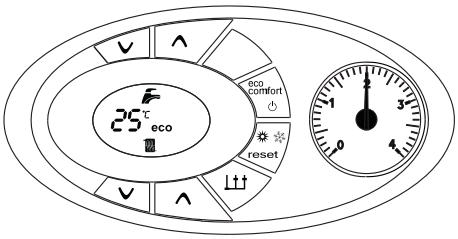

fig. 7

1.4 Adjustments

Heating temperature setting

To set the system flow temperature, use the CH buttons (part. 3 and 4 - fig. 1). It can be varied from a minimum of 20°C to a maximum of 80°C.

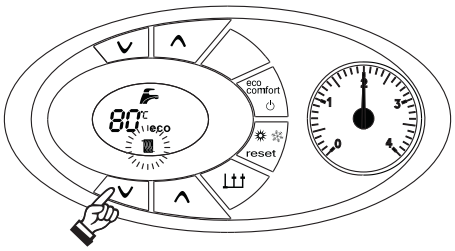

fig. 8

Room temperature adjustment (using a room thermostat)

Using the room thermostat, set the temperature desired. Controlled by the room thermostat, the boiler lights and heats the system water to the system delivery setpoint temperature. The burner shuts down when the desired temperature in the room is reached.

A room thermostat and programmer are a mandatory requirement (Building regulations Doc 'L' 2002).

Room temperature adjustment (using an optional Remote Control)

Using the remote control, set the temperature desired. The flow temperature will be controlled by the remote control. For settings and other informations, see the relative manual.

2. Installation

2.1 General Instructions

This unit must only be used for its intended purpose. This unit is designed to heat water to a temperature below boiling point and must be connected to a heating system and/or a water supply system for domestic use, compatible with its performance, characteristics and heating capacity. Any other use is deemed improper.

THE BOILER MUST ONLY BE INSTALLED BY QUALIFIED PERSONNEL, IN COMPLIANCE WITH ALL THE INSTRUCTIONS GIVEN IN THIS TECHNICAL MANUAL, THE PROVISIONS OF CURRENT LAW, THE REQUIREMENTS OF THE TECHNICAL STANDARDS (BS) AND ANY LOCAL REGULATIONS AND THE RULES OF PROPER WORKMANSHIP.

Incorrect installation can cause damage or injury for which the manufacturer cannot be deemed responsible.

The unit must be installed in compliance with these instructions and the following standards applicable in Great Britain.

Gas Safety Regulations (Installations & Use).

Local Building Regulations.

The Building Regulations (Part L).

The Buildings Standards (Scotland - Consolidated) Regulations).British Standards Codes of Practice (BSI):

B.S.	5440	Part 1	Flues
B.S.	5440	Part 2	Air flow and ventilation
B.S.	5449	.....	Forced circulation hot water production systems
B.S.	6798	.....	Installation of gas-fired boilers for hot water
B.S.	6891	.....	Gas systems
B.S.	7671	.....	IEE wiring system standards
B.S.	4814	.....	Specifications for expansion tanks
B.S.	5482	.....	LPG systems
B.S.	7593	.....	Water treatment in central heating systems for DHW production
B.S.	5546	.....	Installation of systems for DHW production

Model Water By-Laws (Great Britain)

B.S.	5955-8	.....	Installation of plastic pipes

For Northern Ireland the relevant laws in force must be observed.

Safe handling of materials

Pay attention when handling the boiler insulation panels as they contain materials that could irritate the skin. No part of the boiler contains asbestos, mercury or CFC's.

The use Personal Protective Equipment (PPE) is always recommended.

Advice for transport and handling

For lifting and transporting always take suitable safety precautions: keep your back straight, bend knees, do not turn your body, move feet, avoid bending forward or sideways and keep the load as close as possible to your body.

If possible, use a trolley or other suitable means to carry the boiler.

Grip the boiler firmly and, before lifting it, try and find the point where the load is concentrated in order to establish the centre of gravity and suitably reposition yourself. Ideally seek assistance in lifting the boiler.

2.2 Place of installation

The combustion circuit is sealed with respect to the place of installation and therefore the unit can be installed in any room. However, the place of installation must be sufficiently ventilated to prevent the creation of dangerous conditions in case of even slight gas leaks. This safety regulation is provided for by EEC Directive no. 2009/142 for all gas units, including those with a sealed chamber.

In any case, the place of installation must be free of dust, flammable materials or objects or corrosive gases.

The boiler is arranged for wall mounting and comes standard with a hanging bracket. A paper template for marking the drilling points on the wall is provided in the box. The wall fixing must ensure stable and effective support for the boiler.

If the unit is enclosed in a cabinet or mounted alongside, a space must be provided for removing the casing and for normal maintenance operations. The minimum measurements to be respected are given in fig. 9.

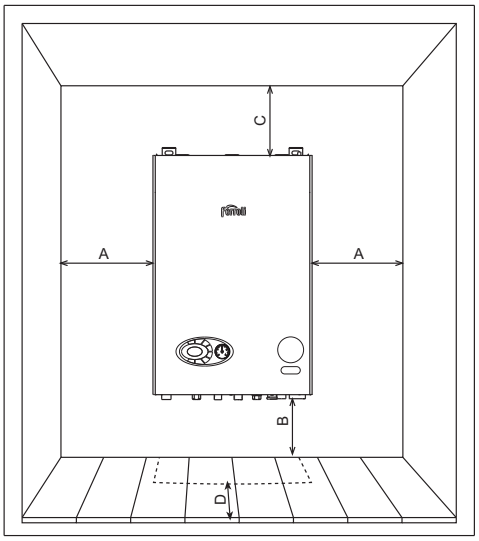

fig. 9 - Minimum distances around the boiler

A Min. 2,5 cm
B Min. 20 cm
C Min. 30 cm
D Min. 60 cm (via an openable panel)

2.3 Plumbing connections

Important

The heating capacity of the boiler must be previously established by calculating the building's heat requirement according to the current regulations. To ensure proper operation and long boiler life, the plumbing system must be adequately sized and complete with all the necessary accessories, including a room thermostat, a thermostatic radiator valve (TRV), etc. The system flow and return pipes must have a diameter of at least 22 mm for the first 3 m of length from the unit.

If the system delivery and return pipes follow a path where air pockets could form in certain places, it is advisable to install vent valves at these points. Also, install type "A" drain cocks at the lowest points in the system to allow complete emptying.

The temperature drop between the delivery manifold and the return to the boiler should not exceed 20 °C.

A flow rate of at least 6 litres/min through the heat exchanger is required.

Do not use the water system pipes to earth electrical appliances.

Before installation, carefully flush all the heating system pipes to remove any residuals or impurities that could affect proper operation of the unit (as required by BS 7593 Building regs Doc L).

Carry out the connections to the unit as indicated in fig. 32.

The safety valve discharge must be connected to a 15 mm diameter copper pipe descending from the boiler to run off system water in case of overpressure in the heating circuit. Otherwise, the boiler manufacturer cannot be held liable if the discharge valve operates and floods the room. The discharge must be run to the outside of the building to prevent the risk of damage or injury caused by discharged hot water in case of overpressure in the system.

Connections to the boiler are to be made in such a way as to ensure that its internal pipes and fittings are free of stress. If a non-return valve is installed also on the DHW circuit (if provided for), it is necessary to install a safety valve between the boiler and circuit (with non-return valve at least 3 metres from the boiler) or an expansion tank for domestic use.

Isolation valve kit

The isolation valves supplied (see fig. 10) must be installed between the boiler and heating system to allow the boiler to be isolated from the system if necessary.

For installation, follow the instructions contained in the kit.

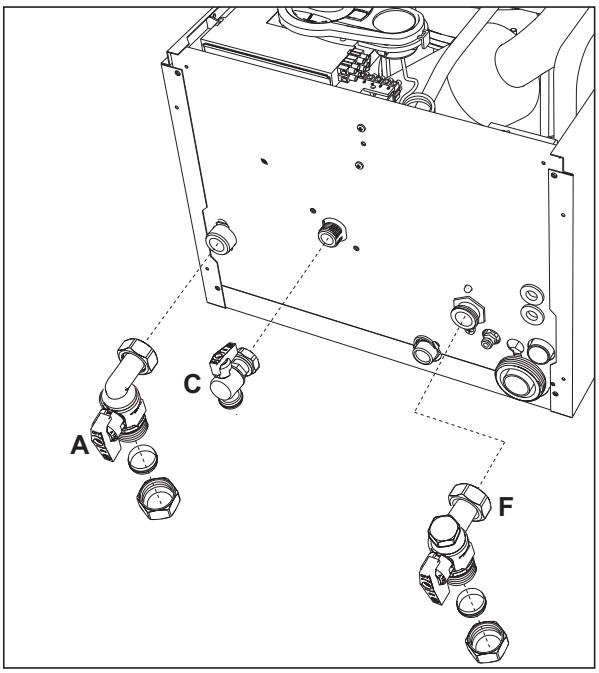

A Flow isolation valve 3/4” (Red)
C Gas cock 1/2” (yellow)
F Return isolation valve 3/4” - System filling

fig. 10 - Isolation valve kit

Make up water

Provision must be made for replacing water lost from the sealed system. Reference should be made to BS6798, for methods of filling and making up sealed systems. There must be no direct connection between the boiler's central heating system and the mains water supply. The use of mains water to charge and pressurise the system directly, is conditional upon the Local Water Byelaws. Again any such connection must be disconnected after use. Ensure the filling point is on the return pipe to the boiler.

Attention - is drawn to the Model Water Byelaws.

Key

1. C.H. filling valve
2. Temporary connection
3. Cold water supply valve
4. Double check valve

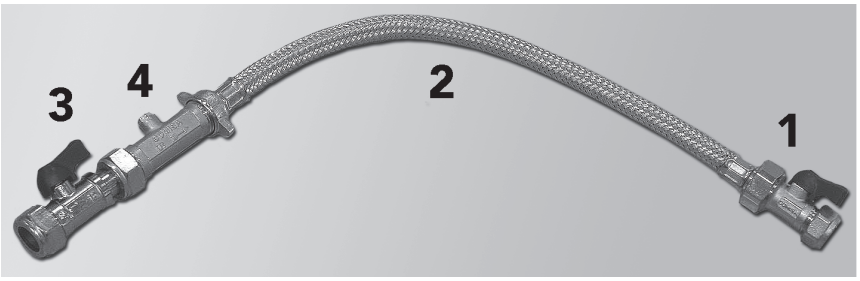

fig. 11 - Filling Loop (not supplied with boiler)

The maximum domestic water pressure for the inlet supply is 9 bar (130 P.S.I.). If the cold mains supply exceeds 5 bar (72 P.S.I.), a water governor or pressure reducing valve must be fitted by the installer into the mains supply in an inconspicuous but accessible position preferably between 3 and 5 metres (10-16ft) before the appliance. Such a valve must be approved by WRAS. The fitting of a DHW expansion vessel is also recommended.

Water treatment

If treatment of the water is necessary, Ferroli recommends the exclusive use of specific products such as Fernox or Sentinel to be applied in compliance with the producer's instructions. For more information, please contact:

Fernox Manufacturing Co. LTD.
Cookson Electronics, Forsyth Road
Sheerwater, Woking, Surrey, GU21 5RZ
Tel.: 0870 8700362

Sentinel Performance Solutions Ltd
The Heath Business & Technical Park
Runcorn, Cheshire WA7 4QX
Tel.: 0151 424 5351

If the boiler is installed in an existing system, it is necessary to remove any unsuitable additives by thoroughly cleaning the system. Cleaning of all the systems must be carried out in compliance with the provisions of Standard B.S. 7593.

In areas characterised by the presence of hard water, treatment may be necessary to prevent the formation of scale in the boiler.

Make sure to use the water treatment product in the correct concentration, in compliance with the producer's instructions.

2.4 Connection to the gas system

If necessary the local Gas supplier should be consulted, at the installation planning stage, in order to establish the availability of an adequate supply of gas.

An existing service pipe must **not** be used without prior consultation with the local Gas supplier.

A gas meter can only be connected by the Local Gas supplier, or by a Local Gas suppliers Contractor.

Installation pipes should be fitted in accordance with BS6891.

Appliance inlet **working pressure** must be 20mbar MINIMUM, for NG and 37 mbar minimum for LPG.

Do not use pipes of a smaller size than the combination boiler inlet gas connection (22 mm).

The complete installation must be tested for gas soundness and purged as described in BS689. All pipework must be adquately supported. An isolating gas valve is provided and should be fitted on the boiler gas inlet. Please wait 10 minutes when lighting from cold before checking. Gas pressures should be checked after the boiler has operated for 10 minutes to reach thermal equilibrium. This appliance has no facility to check the burner pressure, however if the inlet pressure and the gas rate are correct the boiler should be set correctly, the gas valve is set and sealed at the factory and should not be adjusted without authorisation from Ferroli Personnel. A combustion test should be carried out to ensure correct air/gas mix (see page 28 combustion analyser testing).

The isolation kit shown in fig. 10 is supplied as standard.

2.5 Electrical connections

The unit must be installed in conformity with current national and local regulations.

Connection to the electrical grid

The unit's electrical safety is only guaranteed when correctly connected to an efficient earthing system executed according to current safety standards. Have the efficiency and suitability of the earthing system checked by professionally qualified personnel. The manufacturer is not responsible for any damage caused by failure to earth the system. Also make sure that the electrical system is adequate for the maximum power absorbed by the unit, as specified on the boiler dataplate.

The boiler is prewired and provided with a cable and plug for connection to the electricity supply. The connections to the grid must be made with a permanent connection and equipped with a double pole switch whose contacts have a minimum opening of at least 3 mm and 3A max fuse protection between the boiler and the line. Ensure correct polarity (LINE: brown wire / NEUTRAL: blue wire / EARTH: yellow-green wire) in making connections to the electrical supply. During installation or when changing the power cable, the earth wire must be left 2 cm longer than the others.

The user must never change the unit's power cable. If the cable gets damaged, switch off the unit and have it changed solely by professionally qualified personnel. If changing the electric power cable, use solely **"HAR H05 VV-F"** 3x0.75 mm2 cable with a maximum outside diameter of 8 mm.

Accessing electrical terminal block

The electrical connections terminal block can be accessed after removing the casing. The layout of the terminals for the various connections is given in the wiring diagram in fig. 37.

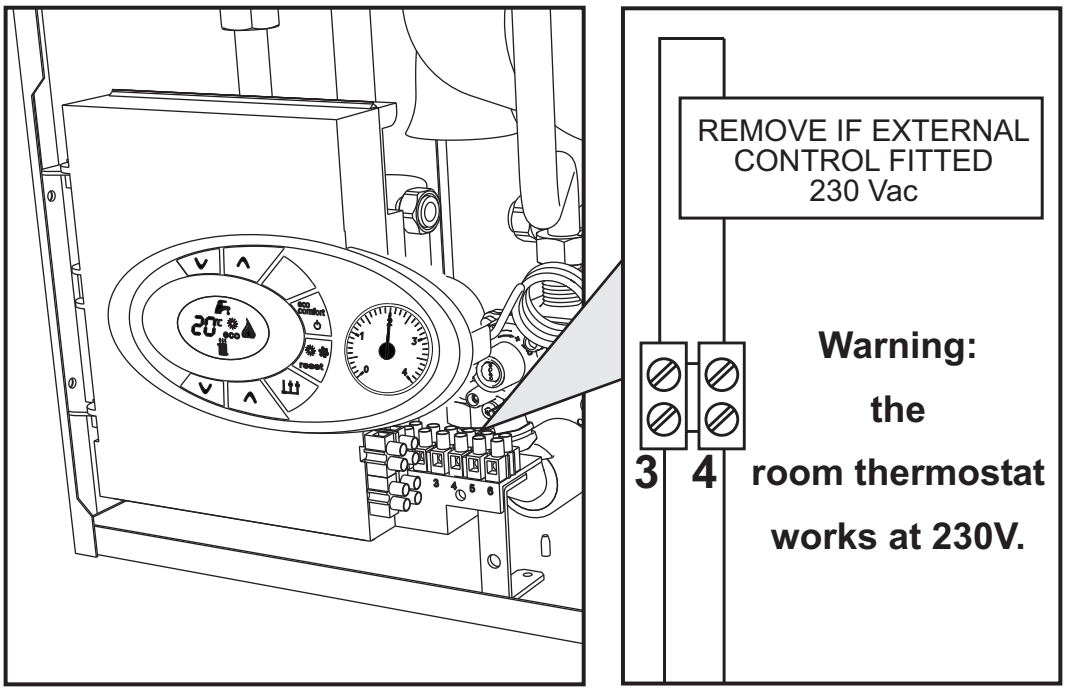

fig. 12 - Electrical terminal block

Room thermostat (optional)

Remove connections 3 - 4 if external control fitted.

If using external controls the switched line can be connected into terminal 3 of the electrical block (see fig. 14 and fig. 16).

Central heating Demand

The heat demand can be controlled by the room thermostat (terminal 3-4) or by a switch line 230 V (terminal 3).

Standard system

For a general pipe layout and wiring diagram on the “S” and “Y” plan systems please see fig. 13, fig. 14, fig. 15 and fig. 16.

T-ONE “S” Plan

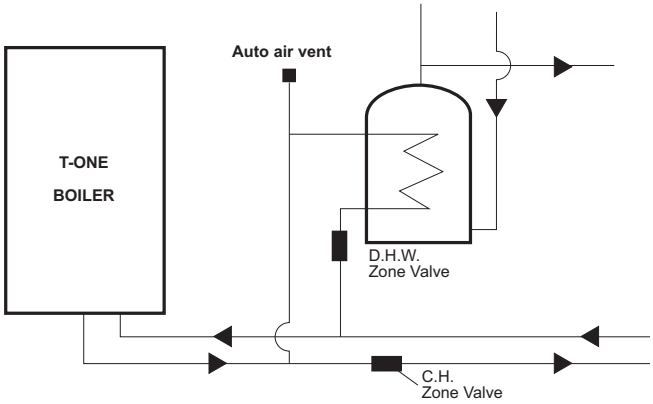

fig. 13 - Pipe layout

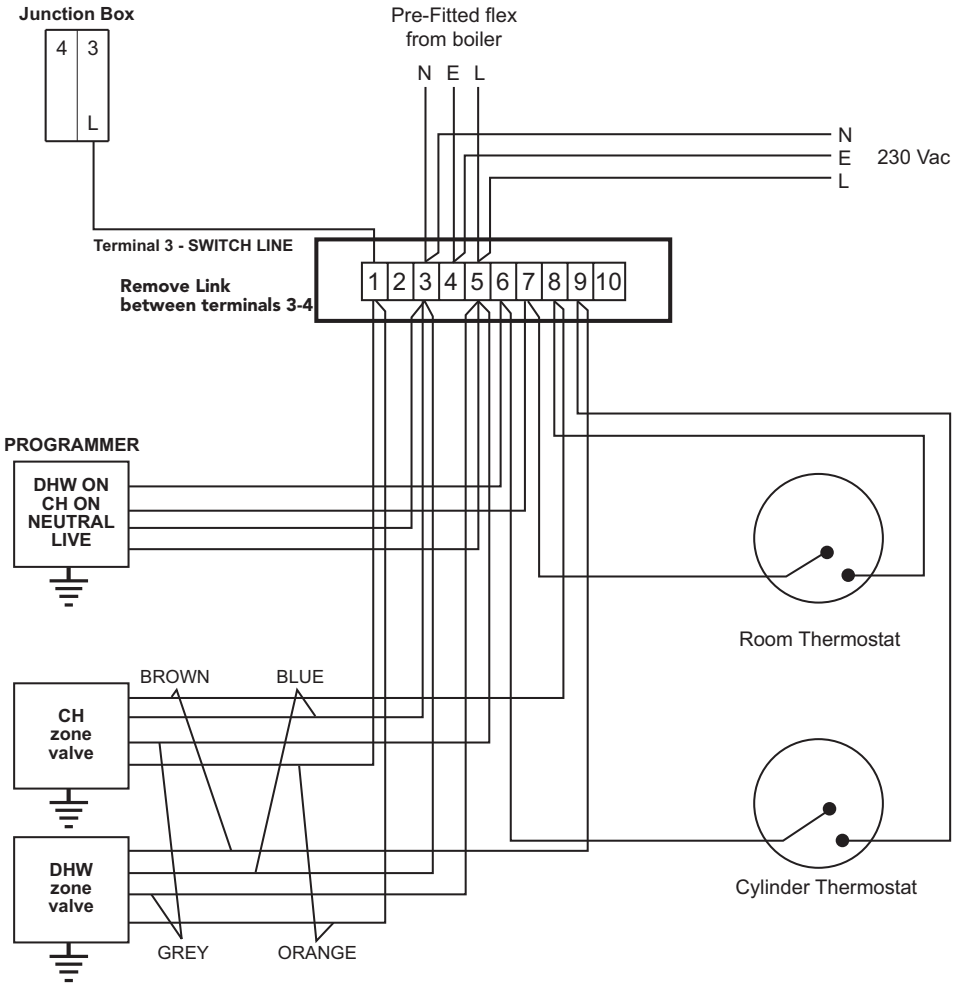

fig. 14 - Wiring diagram

T-ONE "Y" Plan

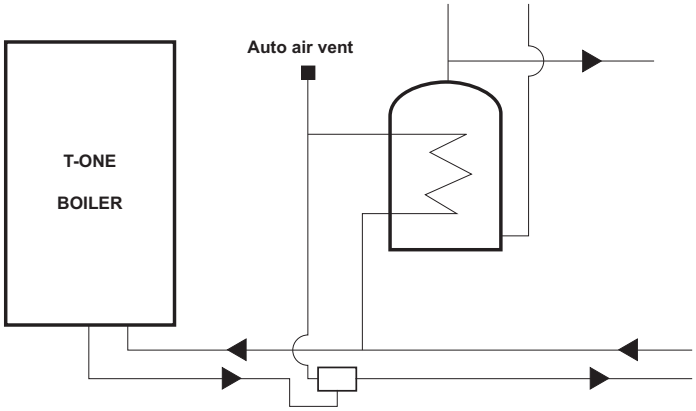

fig. 15 - Pipe layout

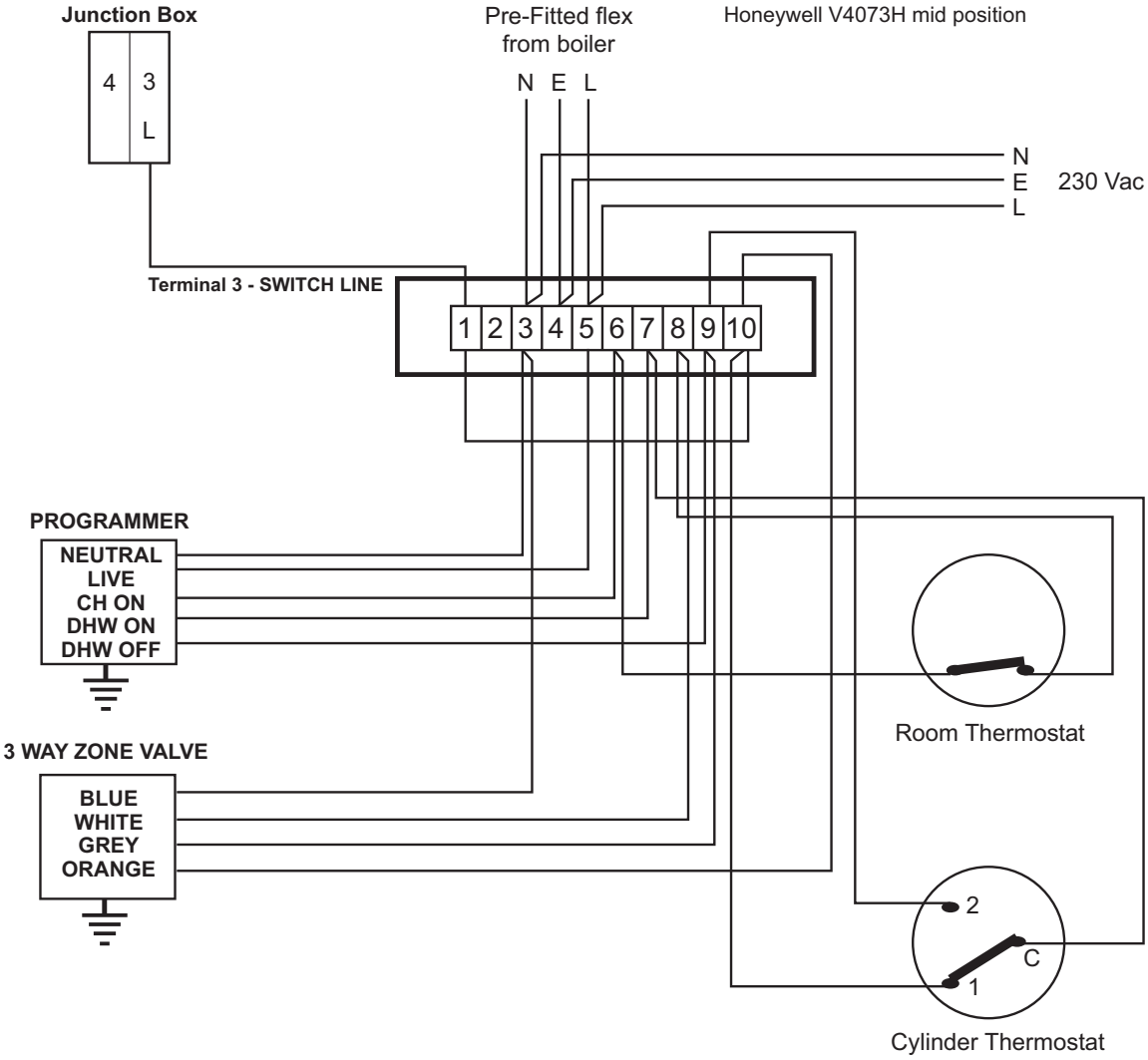

fig. 16 - Wiring diagram

2.6 Flue system

This unit is a "C type" with **sealed chamber** and forced draught, with air inlet and flue exhaust to be connected to one of the following flue systems. Before installation, with the aid of the tables and calculation methods given, check that the pipes of the flue system do not exceed the maximum permissible lengths. The current standards and local regulations must be observed. It is absolutely essential, to ensure that products of combustion discarging from the terminal cannot re-enter the building, or enter any adjacent building, through ventilators, windows, doors, natural air infiltration or forced ventilation/air conditioning.

Only a Ferroli flue system (with respective accessories) must be used with this unit, as required by BS 5440 and CE standards.

Connection with coaxial pipes

Standard connection with coaxial pipes (code 041049G0)

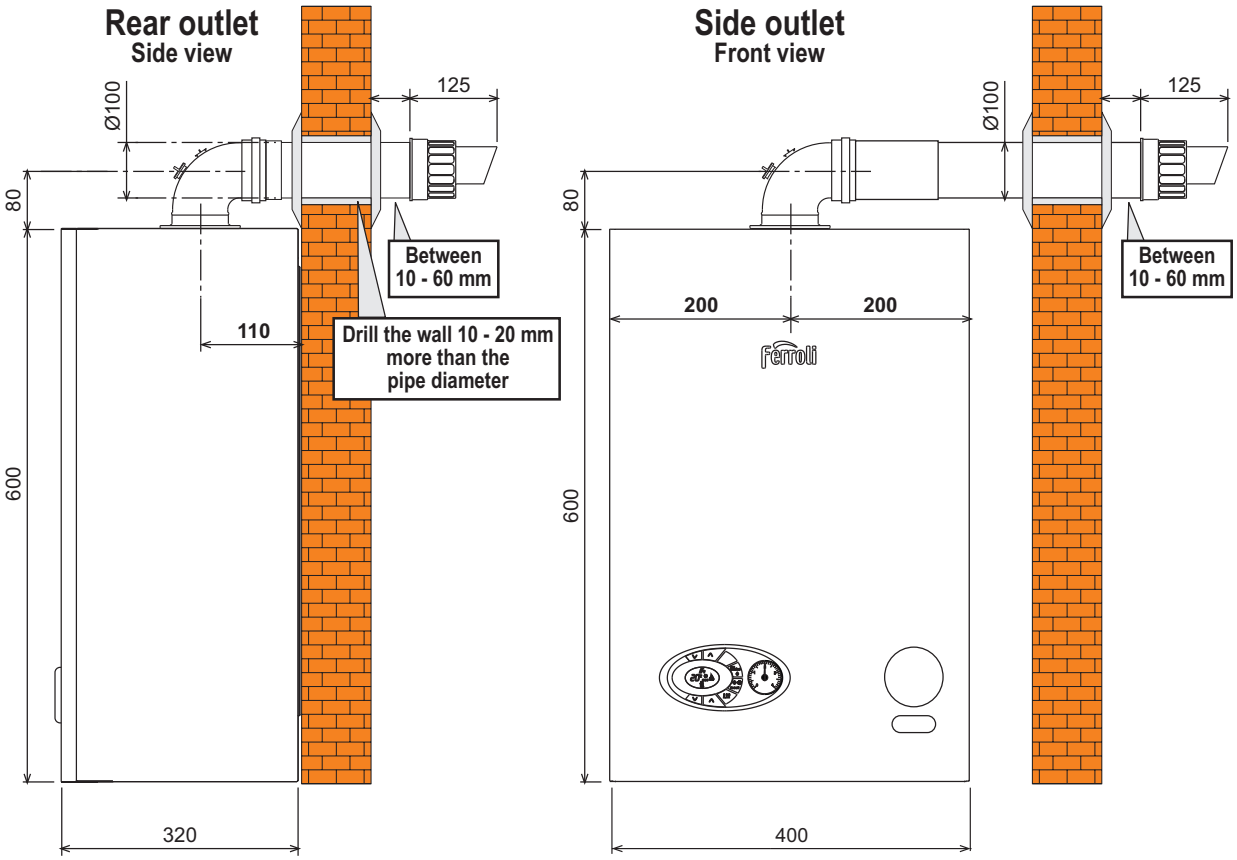

fig. 17 - Standard connection

Horizontal flue installation

1. Define the position for installing the unit.
2. If using standard flue (**041049G0**) this must be installed level. For extended horizontal flue lengths over 1m a fall of 3° of the flue exhaust should be incorporated back to the boiler.
3. Make a hole of diameter 10 - 20 mm greater than the nominal diameter of the concentric pipe used.
4. If necessary, cut the terminal length to size, ensuring that the external pipe protrudes from the wall by between 10 and 60 mm. Remove the cutting burrs.
5. Connect flue to the boiler, positioning the seals correctly. Seal the flue into the wall with silicone or sand + cement and cover with wall seals provided.

Flue seals should be lubricated with a silicone type grease to prevent damage (grease not supplied).

Other coaxial connections

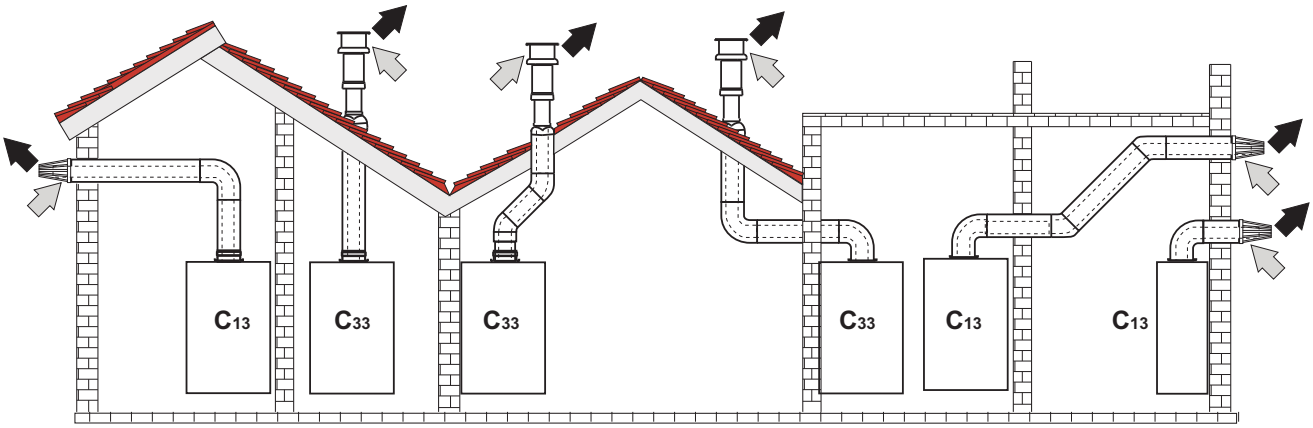

fig. 18 - Examples of connection with coaxial pipes (⇨ = Air / ➡ = Fumes)

For coaxial connection, fit the unit with one of the following starting accessories. For the wall hole dimensions, refer to section "4.1 Dimensions and connections" pag. 26.

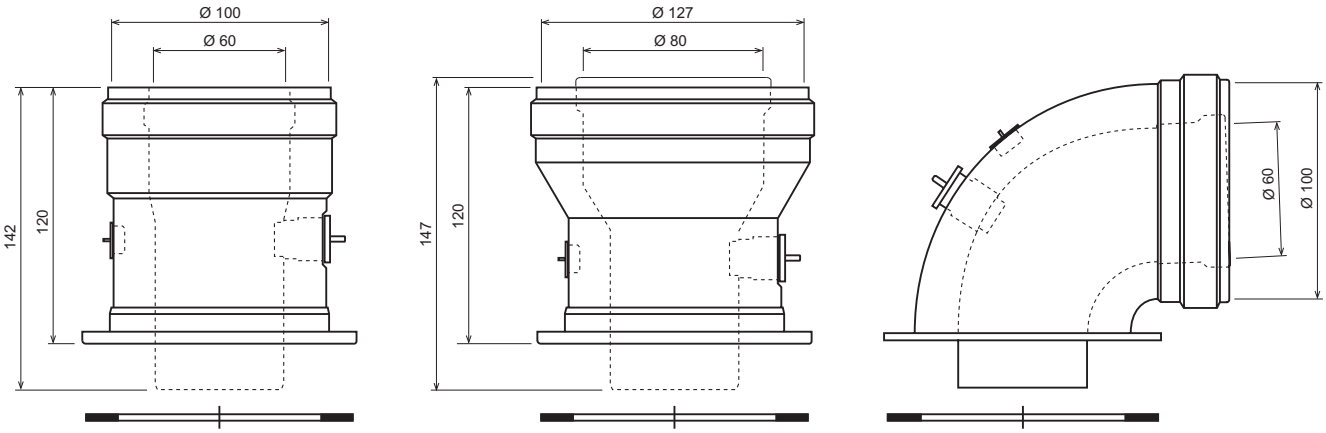

041002X0 **041006X0** **041001X0**

fig. 19 - Starting accessory for coaxial ducts

Before proceeding with installation, check with table 1 that the maximum permissible length is not exceeded, bearing in mind that every coaxial bend gives rise to the reduction indicated in the table. For example, a Ø 60/100 duct comprising a 90° bend + 1 horizontal metre has a total equivalent length of 2 metres.

Table. 1 - Max. length coaxial ducts

	Coaxial 60/100	Coaxial 80/125
	T-ONE 18 S HE - 25 S HE - 32 S HE	T-ONE 18 S HE - 25 S HE - 32 S HE
Max permissible (horizontal) equivalent flue length	**7 m**	**28 m**
Max permissible (vertical) equivalent flue length	**8 m**	
Reduction factor 90° bend	1 m	0.5 m
Reduction factor 45° bend	0.5 m	0.25 m

Connection with twin pipe flue

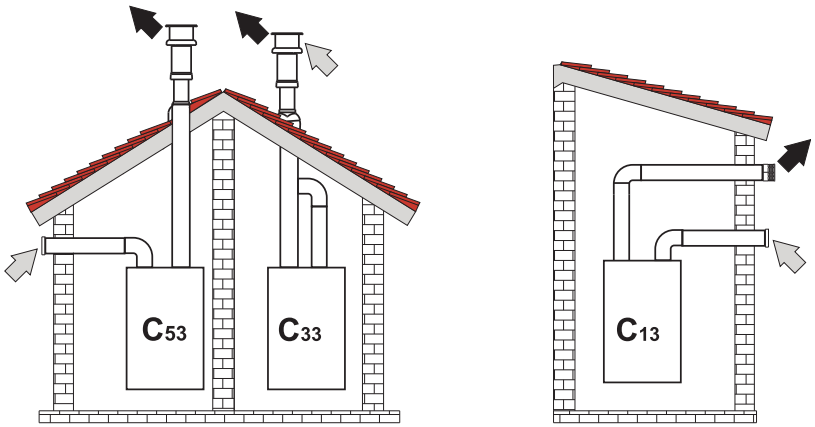

fig. 20 - Examples of connection with twin pipe flue (⇨ = Air / ➡ = Fumes)

For the connection of twin pipe flue, fit the unit with the following starting accessories:

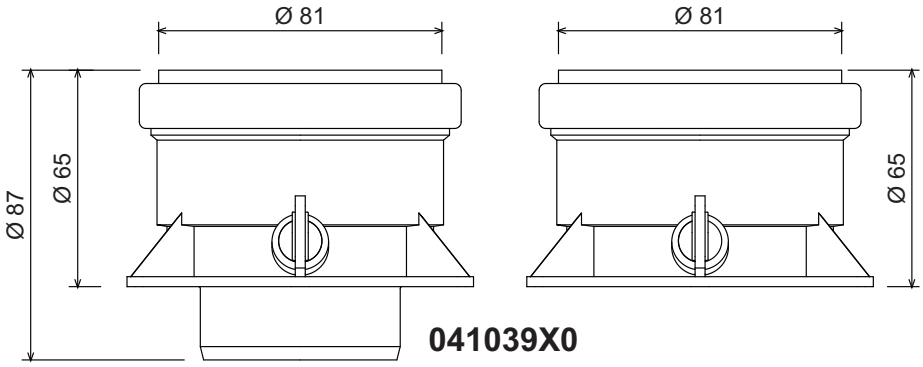

fig. 21 - Starting accessory for twin pipe flue

Before proceeding with installation make sure the maximum permissible length has not been exceeded, by means of a simple calculation:

1. Completely establish the layout of the system of split flues, including accessories and outlet terminals.
2. Consult the table 3 and identify the losses in m_{eq} (equivalent metres) of every component, according to the installation position.
3. Check that the sum total of losses is less than or equal to the maximum permissible length in table 2.

Table. 2 - Max. length twin pipe flue

	Separate ducts		
	T-ONE 18S HE	**T-ONE 25S HE**	**T-ONE 32S HE**
Max. permissible length	$70m_{eq}$	$70m_{eq}$	$70m_{eq}$

Table. 3 - Accessories

				Losses in m_{eq}		
				Air inlet	Fume exhaust	
					Vertical	Horizontal
Ø 80	**PIPE**	1 m M/F		1.0	1.6	2.0
	BEND	45° M/F		1.2	1.8	
		90° M/F		1.5	2.0	
	PIPE SECTION	with test point		0.3	0.3	
	TERMINAL	Horizontal air intake		2.0	-	
		Horizontal flue terminal		-	5.0	
	TERMINAL	Vertical flue terminal 80/80, 80/125		-	12.0	

Position of terminals

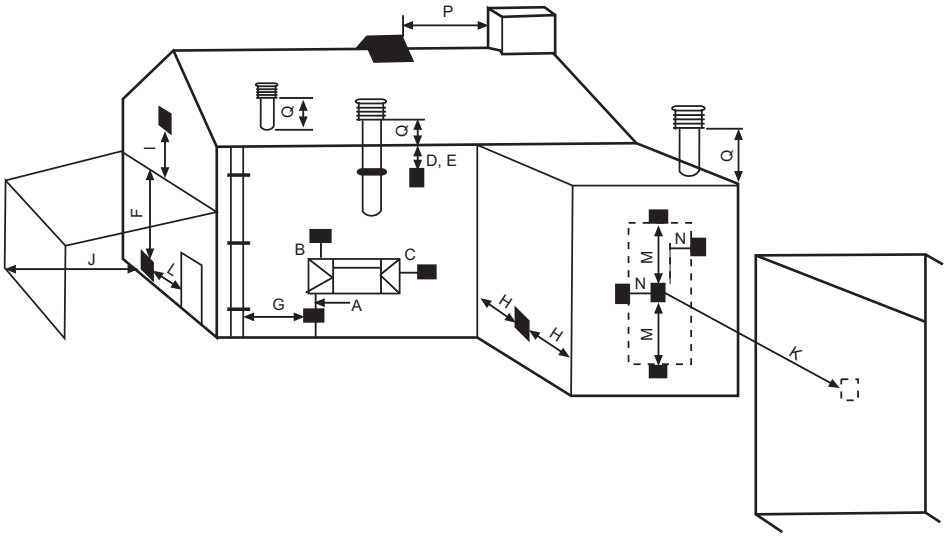

fig. 22

Minimum dimensions of fume exhaust terminals		
A	Directly under an opening, air inlet, openable window, etc.	300 mm
B	Above an opening, air inlet, openable window, etc.	300 mm
C	Horizontally to an opening, air inlet, openable window, etc.	300 mm
D	Under gutters, drain pipes	75 mm
E	Under cornices or under eaves	200 mm
F	Under balconies or garages	200 mm
G	From a drain pipe or a vertical drain pipe	150 mm
H	From an internal or external corner	100 mm
I	Above ground level, a roof or balcony	300 mm
J	From a surface facing the terminal	600 mm
K	From a terminal facing the terminal	1200 mm
L	From a garage opening (e.g. door, window) with access to the home	1200 mm
M	Vertically from a terminal on the same wall	1500 mm
N	Horizontally from a terminal on the same wall	300 mm
O	From the wall on which the terminal is fitted	N/A
P	From a vertical structure on the roof	150 mm
Q	Above the intersection with the roof	300 mm
NOTES	• **N/A = Not applicable** • Also, the terminal must be at least 150 mm (fanned draught) from an opening made in the structure of the building to house a fitted element such as a window frame. • Positions of flue terminals: if the flue is installed at a low level the potential effect of the plume must be considered. Special plume management kits are available by request. • The plume must not be directed towards: - A frequented approach - A window or door - An adjacent property	

Connection to multiple flues or single flues with natural draught

To connect the **T-ONE S HE** boiler to a multiple flue or a single flue with natural draught, the flue or chimney must be expressly designed by professionally qualified technical personnel in conformity with the current standards and regulations.

In particular, flues and chimneys must:

- Be sized according to the method of calculation given in the standard.
- Be tight with respect to the products of combustion, resistant to the fumes and heat and impermeable to condensate.
- Have a circular or square cross-section (some hydraulically equivalent sections are permissible), with a vertical progression and with no constrictions.
- Have the ducts conveying the hot fumes at a suitable distance or separately from combustible materials.
- Be connected to just one unit per floor, for not more than 6 units (8 if there is a compensation duct or opening).
- Have no mechanical suction devices in the main ducts.
- Be at low pressure, all along their length, in conditions of stationary operation.
- Have at their base a collection chamber for solid materials or condensate, of at least 0.5 m, equipped with an airtight metal door.

2.7 Condensate drain connection

Installation

The boiler has an internal trap for draining condensate. Fit the inspection coupling **A** and the hose **B**. Fill the trap with approx. 0.5 L of water and connect the hose to the disposal system.

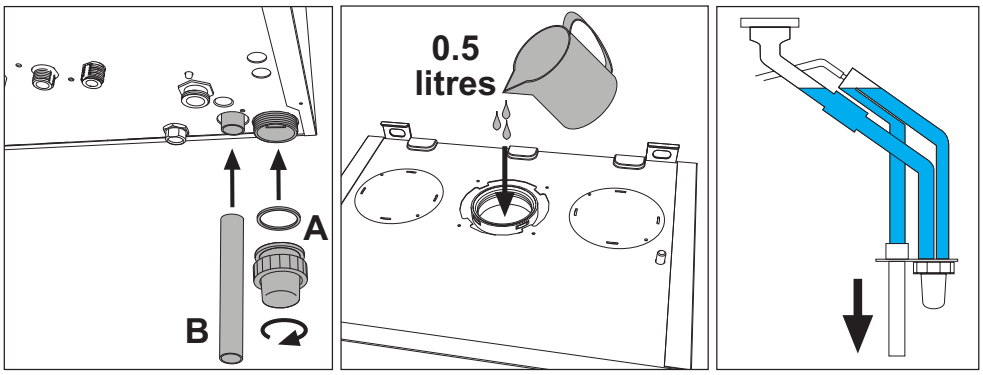

fig. 23

Condensate drain

The condensate should be run inside as far as is practicably possible. For that purpose, use a pipe of at least 22 mm diameter and a trap with flexible connection supplied with the unit to facilitate connection of the condensate drain pipe.

The pipe must be in solvent weld plastic and not in copper, since the condensate has a pH of 4 (slightly acid).

If the condensate drain pipe cannot be ended on the inside, it is advisable to run it outside as shown in the following figure.

The pipe sections going to the outside are exposed to the risk of freezing in particularly extreme weather conditions. To prevent this from occurring, it is advisable to reduce the length of the condensate drain pipes and run them on the inside, as much as possible, before going to the outside. It may also be necessary to insulate the condensate pipe or apply a trace heating device to prevent freezing of the condensate.

The pipes outside the building must be in solvent weld plastic with increased diameter of up to 32 or 40 mm with a maximum run of 3m for connection to a condensate collection soakaway or external drain.

If using a condensate collection soakaway, it must be as indicated in the figure below, or use a specific system (such as Mc Alpine SOAK1GR) available from the majority of plumbing and heating suppliers.

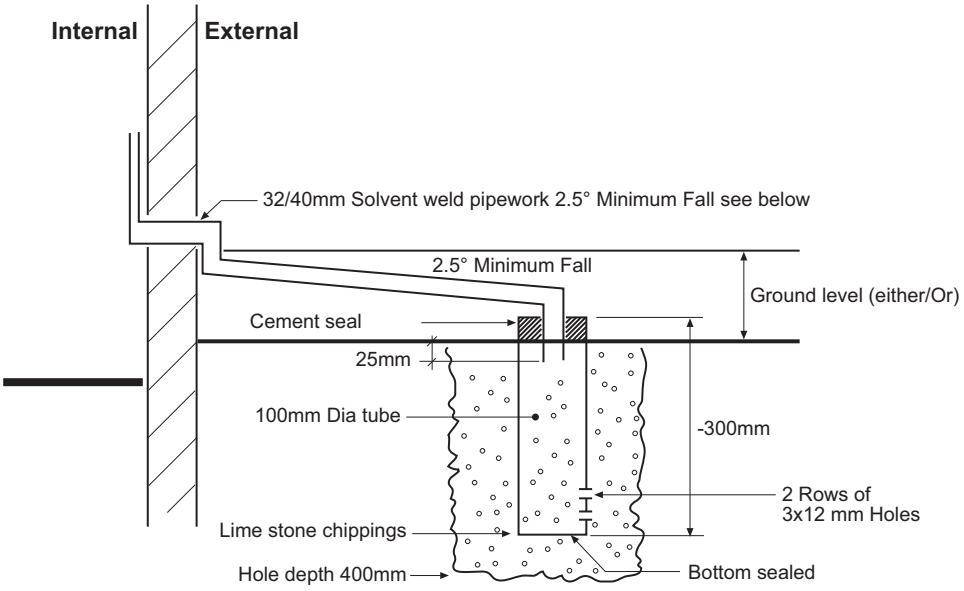

fig. 24 - Condensate drain

3. Service and maintenance

All adjustment, conversion, startup and maintenance operations described below must only be carried out by Qualified Personnel (meeting the professional technical requirements prescribed by current regulations).

FERROLI declines any liability for damage and/or injury caused by unqualified and unauthorised persons tampering with the unit.

3.1 Adjustments

Gas supply conversion

The unit can operate on natural gas or LPG and is factory-set for use with one of these two gases, as clearly shown on the packing and on the dataplate. If a gas different from that for which the unit is arranged has to be used, a conversion kit will be required, proceeding as follows (fig. 25):

1. Remove the front panel.
2. Turn the control panel.
3. Unscrew the nut “C” and remove gas pipe “A” from the gas valve.
4. Replace injector “B”, inserted in the gas pipe, with that contained in the conversion kit.
5. Reassemble gas pipe “A” and check the seal of the connection.
6. Apply the label, contained in the conversion kit, near the dataplate.
7. Refit the front panel.
8. Adjust the parameter for the type of gas:
   - put the boiler in standby mode
   - press the DHW buttons details 1 and 2 - fig. 1 for 10 seconds: the display shows **“b01“** flashing.
   - press the DHW buttons fig. 1 details 1 and 2 - to set parameter 00 (for use with natural gas) or 01 (for use withLPG).
   - press the DHW buttons details 1 and 2 - fig. 1 for 10 seconds.
   - the boiler will return to standby mode
9. Check the working pressure
10. Using a combustion analyser insert probe into the flue test point, check that the CO_2 content in the fumes, with the boiler operating at max. and min. power, matches that given in the technical data table for the corresponding type of gas.

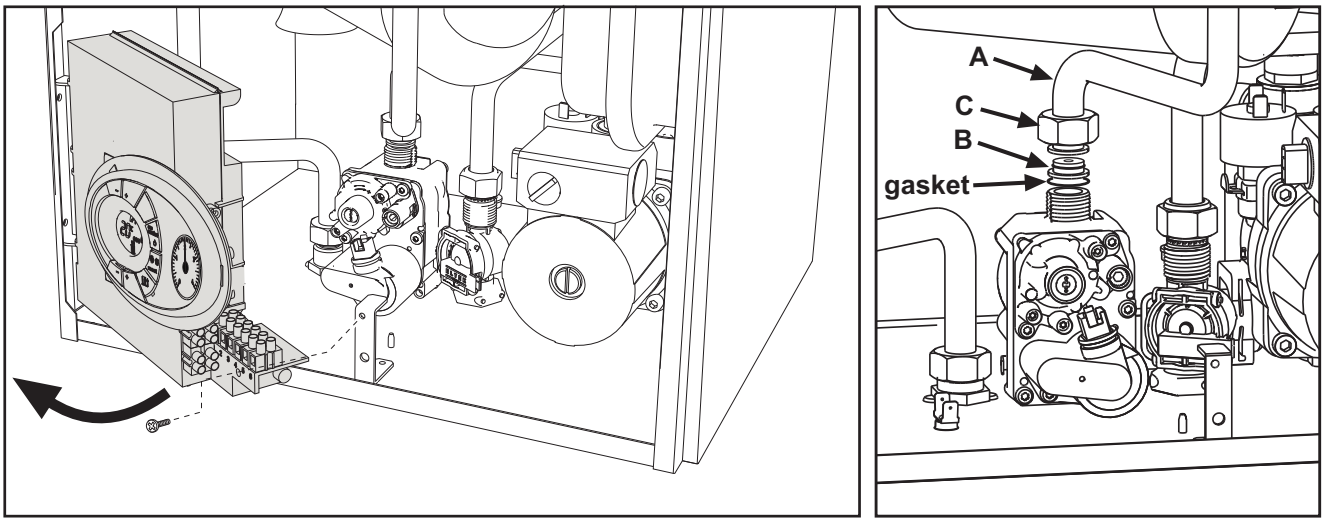

fig. 25 - Changing the gas injector

3.2 Start-up

Checks to be made on initial start up, and after all maintenance operations that involved disconnection from the systems or an operation on safety devices or parts of the boiler:

Before lighting the boiler

- Open any valves between the boiler and the system.
- Check the tightness of the gas system, proceeding with caution and using a Leack Dectection Fluid (LDF) to dectect any leaks on any connections.
- Check correct air pressure of the expansion tank (ref. section "4.4 Technical data table" pag. 29).
- Fill the water system and make sure all air contained in the boiler and the system has been vented, by opening the air vent valve on the boiler and any vent valves on the system.
- Fill the condensate trap and check correct connection of the condensate discharge system.
- Make sure there are no water leaks in the system, DHW circuits, connections or boiler.
- Check correct connection of the electrical system and efficiency of the earthing system
- Make sure there are no flammable liquids or materials in the immediate vicinity of the boiler.

Checks during operation

- Turn the unit on as described in section "1.3 Turning ON and OFF" pag. 5.
- Make sure the fuel circuit and water systems are tight.
- Check the efficiency of the flue exhaust and air ducts while the boiler is working.
- Check the correct tightness and functionality of the condensate discharge system and trap.
- Make sure the water is circulating properly between the boiler and the systems.
- Check proper boiler lighting by doing several tests, turning it on and off with the room thermostat or remote control.
- Using a combustion analyser connected to the flue test point, check that the CO_2 content in the fumes, with the boiler operating at max. and min. output, corresponds to that given in the technical data table for the corresponding type of gas. (Because the combustion for this appliance has been checked, adjusted and preset at the factory, it is only necessary to undertake a further combustion check. If there are operating performance difficulties or the boiler has been converted or if essential components have been replaced further adjustment may be necessary).
- Make sure the gas rate indicated on the meter matches that given in the technical data table on section "4.4 Technical data table" pag. 29.
- Check the correct programming of the parameters and carry out any necessary customization (compensation curve, power, temperatures, etc.).
  (As the parameters for each boiler are factory set, there is no requirement to recheck parameters at the time of commissioning unless a gas conversion has been undertaken.)

3.3 Commisioning instructions

General

PLEASE NOTE: The combustion for this appliance has been checked, adjusted and preset at the factory for operation on the gas type defined on the appliance data plate.

Having checked:

- That the boiler has been installed in accordance with these instructions,
- The integrity of the flue system and the flue seals.
- The integrity of the boiler combustion circuit and the relevant seals.

Test mode

Proceed to put the boiler into operation as follows:

1. To operate the boiler in test mode, press the CH keys together for 5 seconds (see fig. 26)
2. The boiler lights at the ignition percentage rate (40% dependant on model)

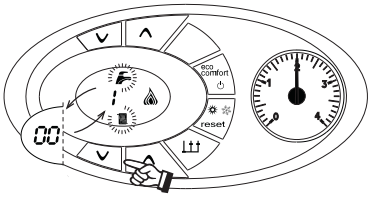

fig. 26 - Test Mode

3. The heating power will be displayed 80% on the LCD display.
4. The flame symbol will be displayed once the boiler has lit.
5. Use the **CH keys** (part. 3 and 4 fig. 1) to give the required output.
6. To exit the test mode, press the **CH keys** (part. 3 and 4 fig. 1) together for 5 seconds, or leave the boiler to automatically switch off after 15 minutes or stopping DHW draw off.

Check the operational (working) gas inlet pressure

Set up the boiler to operate at maximum rate as described in section " Test mode" pag. 20 of section 3.3.

With the boiler operating at maximum rate check that the operational (working) gas pressure at the inlet gas pressure test point (see fig. 27) complies with the requirements of section 4.4.

Ensure that this inlet pressure can be obtained with all other gas appliances in the property working.

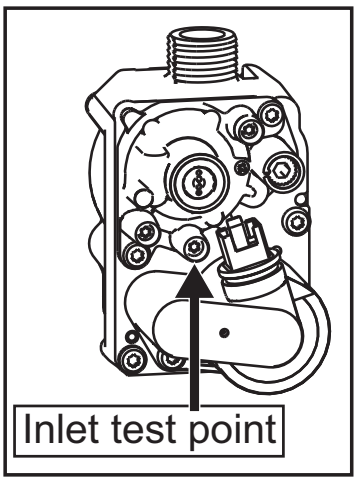

fig. 27

Measure the gas rate

Measure the gas rate and check against following table:

GAS RATES (NATURAL GAS) AFTER 10 MINUTES FROM COLD				
BOILER MODEL	**Maximum rate**		**Minimum rate**	
	m^3/h	ft^3/h	m^3/h	ft^3/h
T-ONE 18S HE	1.84	64.98	0.42	14.83
T-ONE 25S HE	2.64	93.23	0.61	21.54
T-ONE 32S HE	3.38	119.36	0.71	25.07

3.4 Routine servicing, maintenance & repair

General

PLEASE NOTE: During routine servicing, and after any maintenance or change of part of the combustion circuit, we recommend that the following is checked:

- The integrity of the flue system and the flue seals;
- The integrity of the boiler combustion circuit and the relevant seals;
- The operational (working) gas inlet pressure at maximum rate, as described in section 4.4;
- The gas rate, as described in section 4.4;
- The combustion performance, as described in section 3.4 Combustion check.

Competence to carry out the check of combustion performance

PLEASE NOTE: BS 6798: 2009 **Specification for installation and maintenance of gas-fired boilers of rated input not exceeding 70 kW net** advises that:

- The person carrying out a combustion measurement should have been assessed as competent in the use of a flue gas analyser and the interpretation of the results;
- The flue gas analyser used should be one meeting the requirements of BS7927 or BS-EN50379-3 and be calibrated in accordance with the analyser manufacturers' requirements, and
- Competence can be demonstrated by satisfactory completion of the CPA1 ACS assessment, which covers the use of electronic portable combustion gas analysers in accordance with BS 7967, Parts 1 to 4.

Periodical check

To keep the unit working properly over time, it is necessary to have qualified personnel make an annual check that includes the following tests:

- The control and safety devices (gas valve, flow meter, thermostats, etc.) must function correctly.
- The flue pipe must be fully efficient.
- The airtight chamber must be sealed
- The air-flue terminal and ducts must be free of obstructions and leaks
- The condensate evacuation system must be efficient with no leakage or obstructions.
- The burner and exchanger must be clean and free of scale. When cleaning, do not use chemical products or wire brushes.
- The electrode must be free of scale and properly positioned.
- The gas and water systems must be leak free.
- The water pressure in the heating system must be about 1 bar; otherwise, bring it to that value.
- The circulation pump must not be blocked.
- The expansion tank must be filled.
- The gas flow and pressure must correspond to that given in the respective tables.

The boiler casing, panel and aesthetic parts can be cleaned with a soft damp cloth, possibly soaked in soapy water. Do not use any abrasive detergents and solvents.

Opening the casing

To open the boiler casing, you need to follow the sequence given below and the instructions of fig. 29.

1. Using a screwdriver, partially unscrew the 2 screws “A” (fig. 28)
2. Lift the panel “B”

Before carrying out any operation inside the boiler, disconnect the electrical power supply and close the gas cock upstream

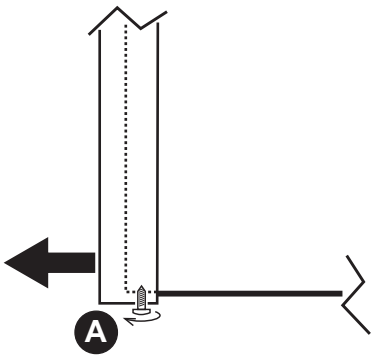

fig. 28

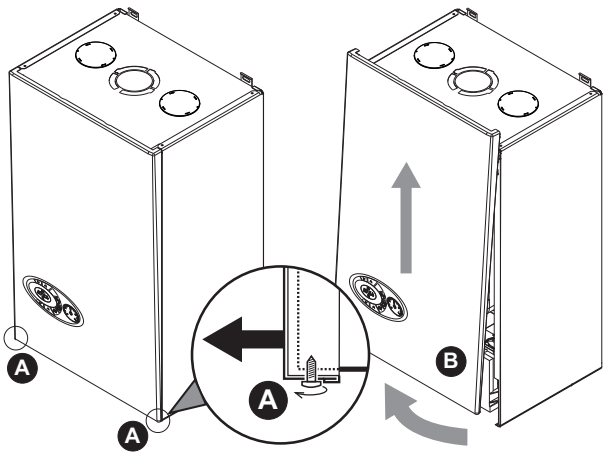

fig. 29 - Opening the casing

When remounting the panel “B” check carefully it is correctly mounted.

Combustion check

Connect the flue gas analyzer to the flue gas sampling point as shown in the fig. 30 and check combustion as described in table 4 and table 5.

1. Press the CH button for 5 seconds to place boiler into test mode
2. Wait for 10 minutes for the boiler to stabilize fully
3. Take the measurement and record
4. Take the boiler to minimum output by pressing the CH – button, allow the boiler to stabilize for a further 10 minutes.
5. Take the measurement and record.

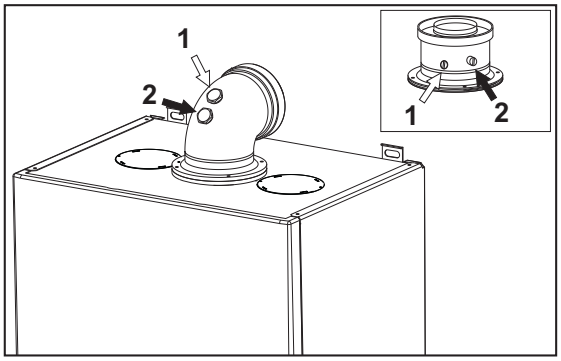

fig. 30 - Flue gas sampling point

1 = Air - **2** = Flue gas

Tabella. 4 - Maximum rate

NATURAL GAS ACCEPTABLE **COMBUSTION RANGE** MAXIMUM RATE AFTER 10 MINUTES FROM COLD			
Boiler Model	**CO/CO_2 RATIO**	**CO_2 NG**	**CO_2 LPG**
T-ONE 18S HE	$\leq$ 0.004	8,7 ÷ 9,2	10 ÷ 10,5
T-ONE 25S HE	$\leq$ 0.004		
T-ONE 32S HE	$\leq$ 0.004		

Tabella. 5 - Minimum rate

NATURAL GAS ACCEPTABLE **COMBUSTION RANGE** MINIMUM RATE AFTER 10 MINUTES FROM COLD			
Boiler Model	CO/CO_2 RATIO	**CO_2 NG**	**CO_2 LPG**
T-ONE 18S HE	$\leq$ 0.004	8,2 ÷ 8,7	9,5 ÷ 10,0
T-ONE 25S HE	$\leq$ 0.004		
T-ONE 32S HE	$\leq$ 0.004		

If the combustion reading is greater than the acceptable value AND the integrity of the complete flue system and combustion circuit seals have been verified and the inlet gas pressure (and gas rate) have been verified, proceed as in section " Setting the Air/Gas Ratio valve" pag. 23.

Setting the Air/Gas Ratio valve

There are two adjustments possible on the air/gas ratio valve, the throttle setting at maximum rate and the offset setting at minimum rate. If either setting is adjusted the combustion values must be rechecked at both rates.

At Maximum Rate:

1. Adjust the boiler to maximum rate in section 3.3 Test Mode.
2. Wait 10 minutes to allow the boiler to stabilize.
3. Now adjust the **Throttle setting** (fig. 31 - screw **A**) until the CO_2 is at the correct **SETTING LEVEL** (see table 4), confirm that the CO/CO_2 ratio is within limits (clockwise to increase gas).

NOTE: ADJUST IN STEPS OF **NO MORE THAN 1/8 OF A TURN** AND WAIT 1 MINUTE AFTER EACH ADJUSTMENT TO ALLOW THE SETTING TO STABILISE.

In the event that the CO_2 setting level with an acceptable CO/CO_2 ratio cannot be obtained please contact the helpline number.

Should you require any assistance during the set up procedure call our Technical service helpline or should you require a service engineer to visit call our service centre at numbers listed on last page of this manual.

At Minimum Rate:

1. Adjust the boiler to minimum output and allow the boiler to stabilize.
2. Now adjust the **offset pressure setting** (fig. 31 - cup **B**) until the CO_2 is at the correct **SETTING LEVEL** (see table 5), confirm that the CO/CO_2 ratio is within limits (clockwise to increase gas).

NOTE: ADJUST IN STEPS OF **NO MORE THAN 1/8 OF A TURN** AND WAIT 1 MINUTE AFTER EACH ADJUSTMENT TO ALLOW THE SETTING TO STABILISE.

Re-check the Minimum Rate

Turn off the boiler and then turn it back on and put in Test Mode at maximum for 1minute. Reduce to minimum and re-check the minimum rate output ensuring the CO2 setting level has remained unchanged and confirm that the CO/CO_2 ratio is within limits.

In the event that the CO_2 setting level with an acceptable CO/CO_2 ratio cannot be obtained please contact the helpline number.

Should you require any assistance during the set up procedure call our Technical service helpline or should you require a service engineer to visit call our service centre at numbers listed on last page of this manual.

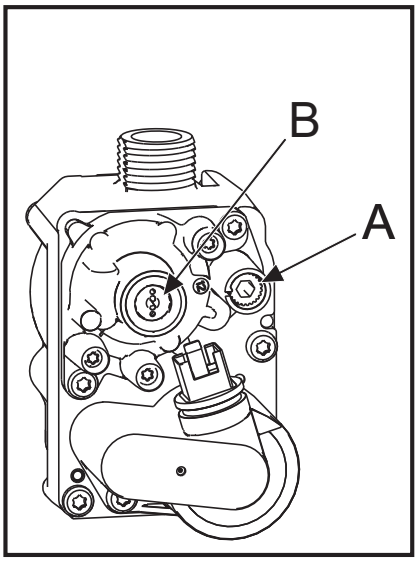

fig. 31 - Gas valve

A Throttle
B Offset adjustment

NOTE: In the event that an acceptable setting level cannot be obtained it will be necessary to change the Air/Gas Ratio Valve.

3.5 Troubleshooting

Diagnostics

The boiler is equipped with an advanced self-diagnosis system. In case of a boiler fault, the display will flash together with the fault symbol (detail 11 - fig. 1) indicating the fault code.

Certain faults cause permanent boiler shutdowns (marked with the letter "**A**"): to restore operation, press the RESET button (detail 6 - fig. 1) for 1 second or RESET on the optional remote timer control if installed; if the boiler fails to start, it is necessary to firstly eliminate the fault.

other faults (indicated with the letter "**F**") cause temporary shutdowns that are automatically reset as soon as the value returns within the boiler's normal working range.

Table. 6 - List of faults

Fault code	Fault	Possible cause	Cure
A01	No burner ignition	No gas	Check the regular gas flow to the boiler and that the air has been purged from the pipes
		Electrode fault	Check that the electrode is correctly positioned and free of any deposits
		Defective gas valve	Check and change the gas valve
		Incorrect inlet gas pressure	Check inlet gas pressure
		Siphon obstructed	Check and if necessary change the siphon
A02	Flame detected with the burner off	Electrode defective	Check the electrode wiring
		Main board defective	Check the PCB
A03	High limit protection	Flow temperature sensor not active or correctly located	Check the correct positioning and operation of the flow sensor
		No system circulation	Check pump and radiator valves present in the system Check operation of the internal by-pass
A04	Flue gas fault	Fault F07 happened 3 times in the last 24 hours	Check the exchanger
A05	Fan problem	Tachometer signal interrupted for 1 hour or longer	Check the wiring and the fan
A06	No flame after the ignition phase (6 times in 4 minutes)	Electrode fault	Check that the electrode is correctly positioned and if necessary change it
		Flame unstable	Check the burner
		Incorrect valve gas Offset	Check the Offset at the minimum power
		Flue gas circuit obstructed	Check if flue gas circuit is free
		Siphon obstructed	Check and if necessary change the siphon
A41	Flow sensor disconnected	Sensor disconnected	Check the correct positioning and operation of the flow sensor
A42	Flow sensor fault	Sensor damaged	Change the sensor
F07	High fume temperature	The exchanger probe detects and excessive temperature	Check the exchanger
F10	Flow sensor fault	Sensor damaged or short circuited	Check the wiring or change the sensor
		Sensor damaged or wiring broken	
F11	Return sensor fault	Sensor damaged or wiring shorted	Check the wiring or change the sensor
		Sensor damaged or wiring broken	
F13	Exchanger probe fault	Sensor damaged or wiring shorted	Check the wiring or replace the probe
		Sensor damaged or wiring broken	
F14	Flow sensor fault	Sensor damaged or short circuited	Check the wiring or change the sensor
		Sensor damaged or wiring broken	
F15	Fan problem	Tachometer signal interrupted, fan connection	Check the wiring and the fan
		Fan damaged, debris in fan	Check the fan, clean debris
F34	Supply voltage under 170V	Electric supply problem	Check the electrical system
F35	Irregular mains frequency	Electric supply problem	Check the electrical system
F37	Incorrect system water pressure	Pressure too low	Fill the system
		Sensor damaged	Check the sensor
F43	Exchanger protection activation.	No system circulation	Check the circulating pump
		Air in the system	Vent the system
F52	Flow sensor fault	Sensor damaged	Change the sensor
A61	Controller **ABM03A** fault	Controller **ABM03A** internal error	Check the earth connection and replace the controller if necessary.
A62	No communication between controller and gas valve	Controller not connected	Connect the controller to the gas valve
		Valve damaged	Replace the valve
A63 A64 F66	Controller **ABM03A** fault	Controller **ABM03A** internal error	Check the earth connection and replace the controller if necessary.

4. Technical data and characteristics

4.1 Dimensions and connections

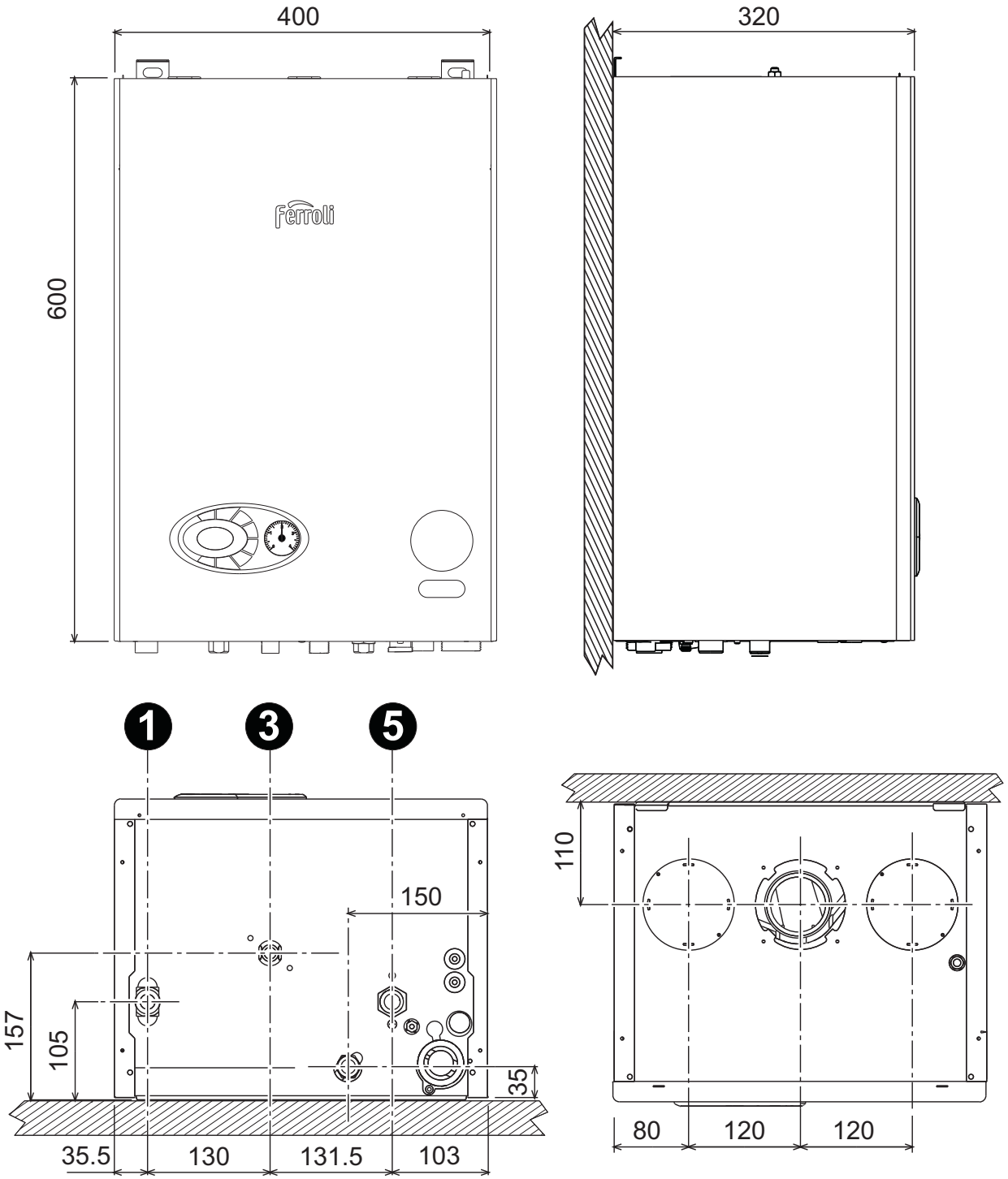

fig. 32 - Dimensions and connections

1 = Heating system flow
3 = Gas inlet
5 = Heating system return

4.2 General view and main components

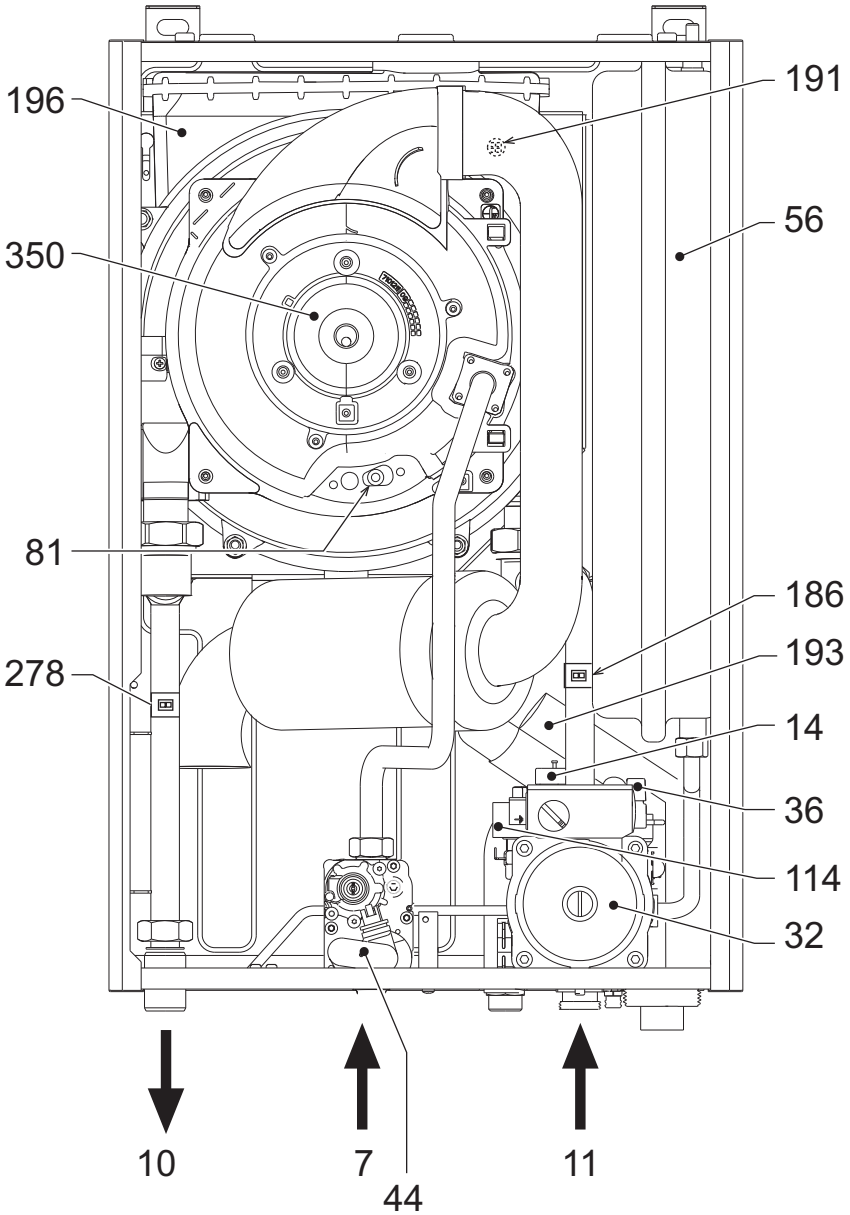

fig. 33 - General view

Key

7 Gas inlet
10 System flow
11 System return
14 Safety valve
32 Heating circulating pump
36 Automatic air vent
44 Gas valve
56 Expansion tank
81 Ignition/ionization electrode
114 Water pressure switch
186 Return sensor
191 Exhaust temperature sensor
193 Siphon
196 Condensate tray
278 Double sensor (Safety + Heating)
350 Fan/Burner

4.3 Water circuit

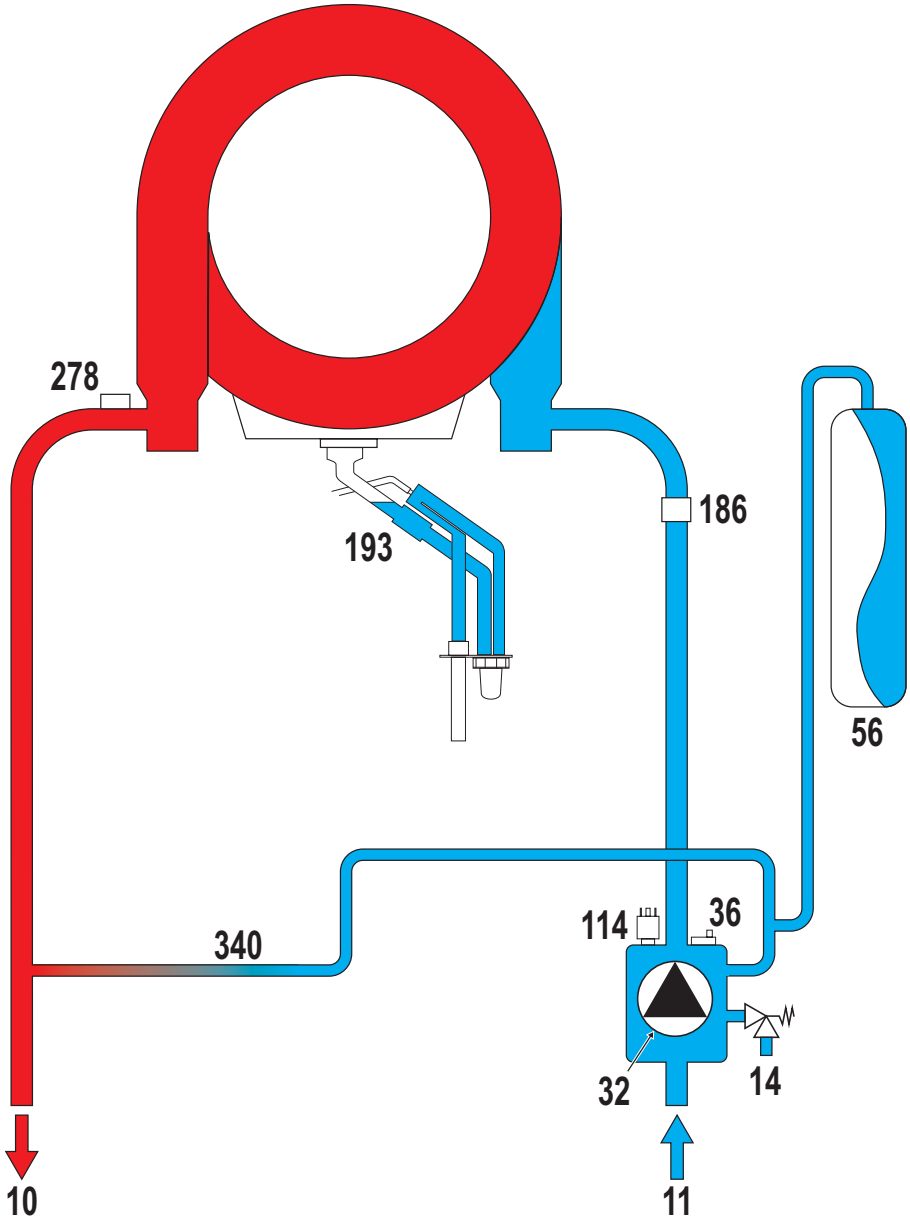

fig. 34 - Water circuit

Key

10 System flow
11 System return
14 Safety valve
32 Heating circulating pump
36 Automatic air vent
56 Expansion tank
114 Water pressure switch
186 Return sensor
193 Condensate Trap
278 Double sensor (Safety + Heating)
340 Bypass pipe

4.4 Technical data table

Data	Unit	T-ONE 18S HE	T-ONE 25S HE	T-ONE 32S HE	
CH Max Heat Input	kW	17.4	25.0	32.0	(Q)
CH Min Heat Input	kW	4.0	5.8	6.7	(Q)
CH Max. Heat Output (80/60°C)	kW	17.0	24.5	31.4	(P)
CH Min Heat Output (80/60°C)	kW	3.9	5.7	6.6	(P)
CH Max. Heat Output (50/30°C)	kW	18.5	26.5	34.0	(P)
CH Min Heat Output (50/30°C	kW	4.3	6.2	7.2	(P)
Efficiency Pmax (80-60°C)	%	98.0	98.0	98.0	
Efficiency Pmin (80-60°C)	%	97.8	97.8	97.8	
Efficiency Pmax (50-30°C)	%	106.1	106.1	106.1	
Efficiency Pmin (50-30°C)	%	107.5	107.5	107.5	
Efficiency 30%	%	108.8	108.8	108.8	
Efficiency class Directive 92/42 EEC	--	★★★★			
NOx emission class	--	5	5	5	(NOx)
Gas inyector G20	mbar	5.0	5.0	5.0	
Gas inlet pressure G20	mbar	20	20	20	
Max. gas flow rate G20	m^3/h	1.84	2.64	3.38	
Min. gas flow rate G20	m^3/h	0.42	0.61	0.71	
CO2 max G20	%	9.20	9.20	9.20	
CO2 min G20	%	8.70	8.70	8.70	
Gas inyector G31	mbar	3.8	3.8	3.8	
Gas inlet pressure G31	mbar	37	37	37	
Max. gas flow rate G31	kg/h	1.36	1.96	2.50	
Min. gas flow rate G31	kg/h	0.31	0.45	0.52	
CO2 max G31	%	10.70	10.70	10.70	
CO2 min G31	%	9.80	9.80	9.80	
CH Max. working pressure	bar	3	3	3	(PMS)
CH Min. working pressure	bar	0.8	0.8	0.8	
CH Max. temperature	°C	90	90	90	(tmax)
CH water content	litres	1.7	1.7	1.7	
CH expansion vassel capacity	litres	8	8	10	
CH expansion vassel prefilling pressure	bar	0.8	0.8	0.8	
Protection rating	IP	X5D	X5D	X5D	
Power supply voltage	V/Hz	230/50	230/50	230/50	
Electrical power input	W	90	100	120	
Weight empty	kg	28	28	30	
Type of unit	--	C_{13}-C_{23}-C_{33}-C_{43}-C_{53}-C_{63}-C_{83}-B_{23}-B_{33}			
PIN CE	--	0461CM0988	0461CM0988	0461CM0988	

4.5 Diagrams

Head available for the system

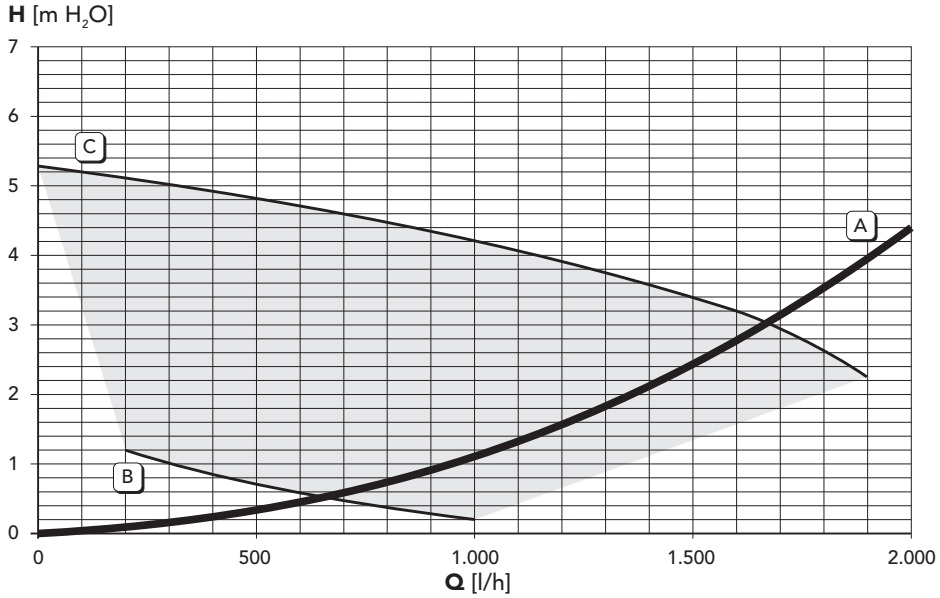

fig. 35 - Pressure loss (T-ONE 18S HE - T-ONE 25S HE)

A Boiler pressure losses
B Circulating pump min. speed
C Circulating pump max. speed

Head available for the system

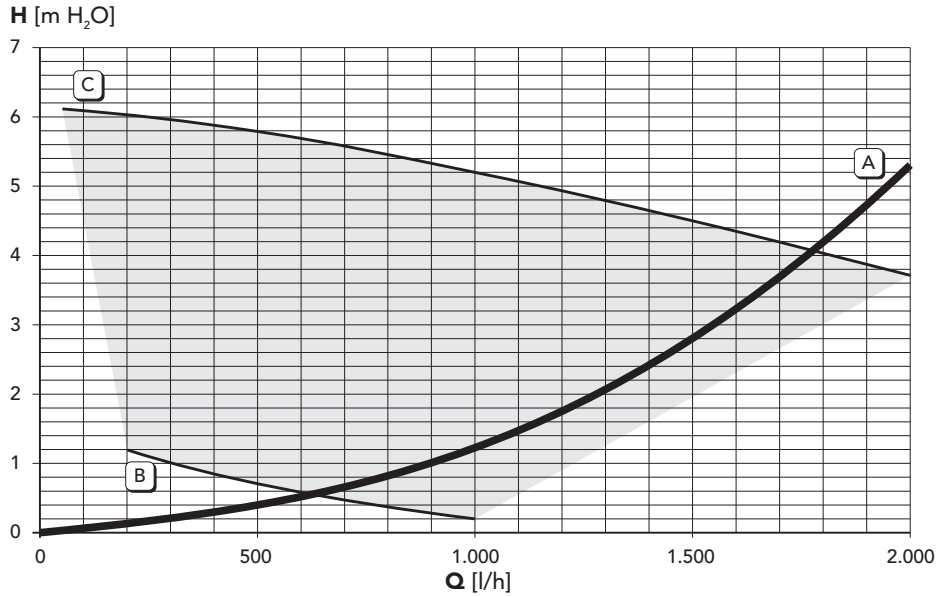

fig. 36 - Pressure loss (T-ONE 32S HE)

A Boiler pressure losses
B Circulating pump min. speed
C Circulating pump max. speed

4.6 Wiring diagram

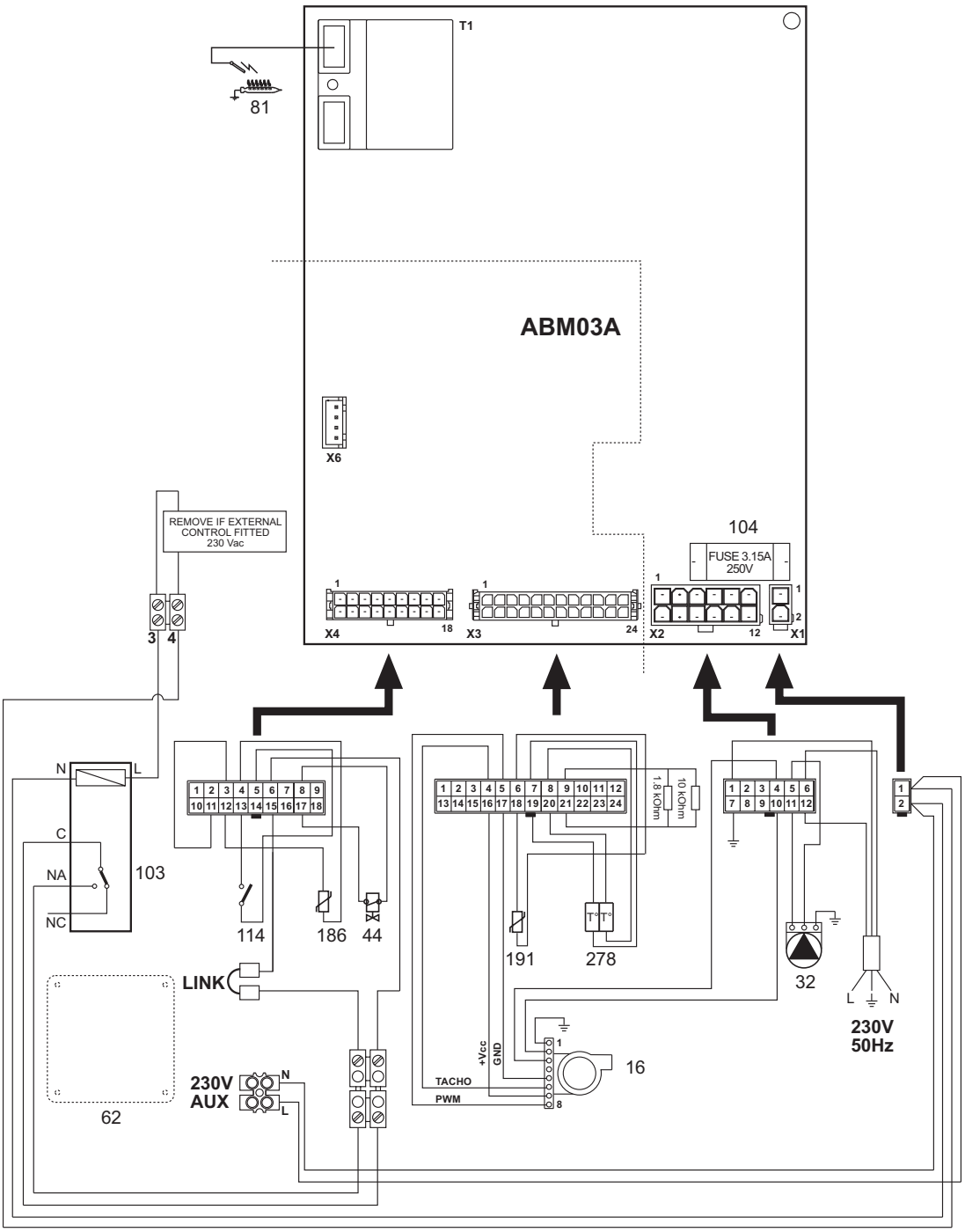

fig. 37 - Wiring diagram

Important: Before connecting the **room thermostat** or the **remote timer control**, remove the jumper on the terminal block.

16 Fan
32 Heating circulating pump
44 Gas valve
62 Time clock (optional)
81 Ignition electrode
103 Relay
104 Fuse
114 Water pressure switch
186 Return sensor
191 Exhaust temperature sensor
278 Double sensor (heating + safety)

Benchmark Commissioning and Servicing Section

It is a requirement that the boiler is installed and commissioned in accordance with manufacturer's instructions and the data fields on the commissioning checklist are completed in full.

To validate the boiler guarantee the boiler needs to be registered with the manufacturer within one month of the installation.

To maintain the boiler guarantee it is essential that the boiler is serviced annually by a Gas Safe registered engineer who has been trained on the boiler installed. The service details should be recorded on the Benchmark Service Interval Record and left with the householder.

benchmark
COLLECTIVE MARK
THE MARK OF QUALITY FOR THE INSTALLATION, COMMISSIONING AND SERVICING OF DOMESTIC HEATING AND HOT WATER SYSTEMS

www.centralheating.co.uk

© Heating and Hotwater Industry Council (HHIC)

GAS BOILER SYSTEM COMMISSIONING CHECKLIST

This Commissioning Checklist is to be completed in full by the competent person who commissioned the boiler as a means of demonstrating compliance with the appropriate Building Regulations and then handed to the customer to keep for future reference.

Failure to install and commission according to the manufacturer's instructions and complete this Benchmark Commissioning Checklist will invalidate the warranty. This does not affect the customer's statutory rights.

Customer name:	Telephone number:
Address:	
Boiler make and model:	
Boiler serial number:	
Commissioned by (PRINT NAME):	Gas Safe register number:
Company name:	Telephone number:
Company address:	
	Commissioning date:
To be completed by the customer on receipt of a Building Regulations Compliance Certificate*	
Building Regulations Notification Number (if applicable):	

CONTROLS (tick the appropriate boxes)				
Time and temperature control to heating	Room thermostat and programmer/timer		Programmable room thermostat	
	Load/weather compensation		Optimum start control	
Time and temperature control to hot water	Cylinder thermostat and programmer/timer		Combination Boiler	
Heating zone valves	Fitted		Not required	
Hot water zone valves	Fitted		Not required	
Thermostatic radiator valves	Fitted		Not required	
Automatic bypass to system	Fitted		Not required	
Boiler interlock			Provided	

ALL SYSTEMS				
The system has been flushed and cleaned in accordance with BS7593 and boiler manufacturer's instructions			Yes	
What system cleaner was used?				
What inhibitor was used?		Quantity		litres
Has a primary water system filter been installed?	Yes		No	

CENTRAL HEATING MODE measure and record:			
Gas rate	m³/hr	**OR**	ft³/hr
Burner operating pressure (if applicable)	mbar	**OR** Gas inlet pressure	mbar
Central heating flow temperature			°C
Central heating return temperature			°C

COMBINATION BOILERS ONLY				
Is the installation in a hard water area (above 200ppm)?	Yes		No	
If yes, has a water scale reducer been fitted?	Yes		No	
What type of scale reducer has been fitted?				
DOMESTIC HOT WATER MODE Measure and Record:				
Gas rate	m³/hr	**OR**	ft³/hr	
Burner operating pressure (at maximum rate)	mbar	**OR** Gas inlet pressure at maximum rate	mbar	
Cold water inlet temperature			°C	
Hot water has been checked at all outlets	Yes		Temperature	°C
Water flow rate			l/min	

CONDENSING BOILERS ONLY		
The condensate drain has been installed in accordance with the manufacturer's instructions and/or BS5546/BS6798	Yes	

ALL INSTALLATIONS						
Record the following:	At max. rate:	CO	ppm	**AND**	CO/CO_2	Ratio
	At min. rate: (where possible)	CO	ppm	**AND**	CO/CO_2	Ratio
Mandatory Requirement	CO_2 @Max Rate	%	CO_2 @Min Rate	%		
The heating and hot water system complies with the appropriate Building Regulations					Yes	
The boiler and associated products have been installed and commissioned in accordance with the manufacturer's instructions					Yes	
The operation of the boiler and system controls have been demonstrated to and understood by the customer					Yes	
The manufacturer's literature, including Benchmark Checklist and Service Record, has been explained and left with the customer					Yes	

Commissioning Engineer's Signature
Customer's Signature
(To confirm satisfactory demonstration and receipt of manufacturer's literature)

All installations in England and Wales must be notified to Local Authority Building Control (LABC) either directly or through a *Competent Persons Scheme. A Building Regulations Compliance Certificate will then be issued to the customer.

benchmark COLLECTIVE MARK
THE MARK OF QUALITY FOR THE INSTALLATION, COMMISSIONING AND SERVICING OF DOMESTIC HEATING AND HOT WATER SYSTEMS

© Heating and Hotwater Industry Council (HHIC)

www.centralheating.co.uk

SERVICE INTERVAL RECORD

It is necessary that your heating system is serviced annually to validate your warranty and that the appropriate Service Interval Record is completed.

Service Provider

Before completing the appropriate Service Record below, please ensure you have carried out the service as described in the manufacturer's instructions. Always use the manufacturer's specified spares when replacing parts.

SERVICE 01					Date:
Engineer name:					
Company name:					
Telephone No:					
Gas safe register No:					
Record:	At max. rate:	CO	ppm	**AND**	CO_2 %
	At min. rate:	CO	ppm	**AND**	CO_2 %
CO/CO_2 Ratio	min. rate			max rate	
Comments:					
Signature					

SERVICE 02					Date:
Engineer name:					
Company name:					
Telephone No:					
Gas safe register No:					
Record:	At max. rate:	CO	ppm	**AND**	CO_2 %
	At min. rate:	CO	ppm	**AND**	CO_2 %
CO/CO_2 Ratio	min. rate			max rate	
Comments:					
Signature					

SERVICE 03					Date:
Engineer name:					
Company name:					
Telephone No:					
Gas safe register No:					
Record:	At max. rate:	CO	ppm	**AND**	CO_2 %
	At min. rate:	CO	ppm	**AND**	CO_2 %
CO/CO_2 Ratio	min. rate			max rate	
Comments:					
Signature					

SERVICE 04					Date:
Engineer name:					
Company name:					
Telephone No:					
Gas safe register No:					
Record:	At max. rate:	CO	ppm	**AND**	CO_2 %
	At min. rate:	CO	ppm	**AND**	CO_2 %
CO/CO_2 Ratio	min. rate			max rate	
Comments:					
Signature					

SERVICE 05					Date:
Engineer name:					
Company name:					
Telephone No:					
Gas safe register No:					
Record:	At max. rate:	CO	ppm	**AND**	CO_2 %
	At min. rate:	CO	ppm	**AND**	CO_2 %
CO/CO_2 Ratio	min. rate			max rate	
Comments:					
Signature					

SERVICE 06					Date:
Engineer name:					
Company name:					
Telephone No:					
Gas safe register No:					
Record:	At max. rate:	CO	ppm	**AND**	CO_2 %
	At min. rate:	CO	ppm	**AND**	CO_2 %
CO/CO_2 Ratio	min. rate			max rate	
Comments:					
Signature					

SERVICE 07					Date:
Engineer name:					
Company name:					
Telephone No:					
Gas safe register No:					
Record:	At max. rate:	CO	ppm	**AND**	CO_2 %
	At min. rate:	CO	ppm	**AND**	CO_2 %
CO/CO_2 Ratio	min. rate			max rate	
Comments:					
Signature					

SERVICE 08					Date:
Engineer name:					
Company name:					
Telephone No:					
Gas safe register No:					
Record:	At max. rate:	CO	ppm	**AND**	CO_2 %
	At min. rate:	CO	ppm	**AND**	CO_2 %
CO/CO_2 Ratio	min. rate			max rate	
Comments:					
Signature					

SERVICE 09					Date:
Engineer name:					
Company name:					
Telephone No:					
Gas safe register No:					
Record:	At max. rate:	CO	ppm	**AND**	CO_2 %
	At min. rate:	CO	ppm	**AND**	CO_2 %
CO/CO_2 Ratio	min. rate			max rate	
Comments:					
Signature					

SERVICE 10					Date:
Engineer name:					
Company name:					
Telephone No:					
Gas safe register No:					
Record:	At max. rate:	CO	ppm	**AND**	CO_2 %
	At min. rate:	CO	ppm	**AND**	CO_2 %
CO/CO_2 Ratio	min. rate			max rate	
Comments:					
Signature					

*All installations in England and Wales must be notified to Local Authority Building Control (LABC) either directly or through a Competent Persons Scheme. A Building Regulations Compliance Certificate will then be issued to the customer.

benchmark COLLECTIVE MARK
THE MARK OF QUALITY FOR THE INSTALLATION, COMMISSIONING AND SERVICING OF DOMESTIC HEATING AND HOT WATER SYSTEMS

© Heating and Hotwater Industry Council (HHIC)

Notes

*All installations in England and Wales must be notified to Local Authority Building Control (LABC) either directly or through a Competent Persons Scheme. A Building Regulations Compliance Certificate will then be issued to the customer.

© Heating and Hotwater Industry Council (HHIC)

Before contacting Ferroli please have available the completed BENCHMARK document (located in the back of this manual), boiler serial number and model detail.

For Technical assistance during the installation, call our
Technical Helpline on 0843 479 0479.
You will be required to provide your Gas Safe Register Number.

Should you require a Service Engineer to visit, call our
Service Centre on 0843 479 0479.

Calls to these numbers are charged at National Rate from BT landlines.
Calls made from mobile networks may be considerable more.

Phone numbers:

Installer _____

Service Engineer _____

BECAUSE OF OUR CONSTANT ENDEAVOUR FOR IMPROVEMENT DETAILS MAY VARY SLIGHTLY FROM THOSE QUOTED IN THESE INSTRUCTIONS.

Ferroli

ALL SPECIFICATIONS SUBJECT TO CHANGE

Please note - to avoid incurring unnecessary expense, in the event of a boiler shut down, check this is not caused by lack of electricity supply, gas supply or low water pressure before calling our Customer Service Helpline.