FIREBIRD

OIL FIRED BOILERS

FIREBIRD 'S' RANGE

POPULAR

HEAT-PAC

INSTALLATION
COMMISSIONING
SERVICING &
USER INSTRUCTIONS

THIS MANUAL MUST REMAIN WITH
THE HOUSEHOLDER ON COMPLETION
OF INSTALLATION

FIREBIRD

ISO 9001:2000 QUALITY

OIL FIRING TECHNICAL ASSOCIATION FOR THE PETROLEUM INDUSTRY
OFTEC
OIL FIRING EQUIPMENT GROUP MEMBER

A

FIREBIRD BOILERS

Formula
For Better Boiler Service

HOUSEHOLDER

Switch on your central heating boiler and check its operation before commencement of heating season.

During the summer season your boiler may be switched off for long periods. In our climate, summer dampness attacks electrical circuits, burner and boiler parts. Deposits on boiler and flue surfaces dampen, and may fall loose resulting in flues and ducts becoming clogged. Deposits also act as an insulator and thus reduce efficiency.

Boilers and burners should be cleaned and serviced before summer switch-off, then switched on and checked again before needed for the winter heating.

This eases seasonal rush on your service engineer and helps him/her give you a better service. Arranging a regular service contract with him/her will help keep your boiler in top condition.

"A stitch in time saves nine" - and disappointment.

Issued by FIREBIRD BOILERS in the interest of our customers and the heating industry.

CONTENTS

FOREWORD		P. 3
1.	INTRODUCTION	P. 3
2.	STANDARDS & REGULATIONS	P. 4
3.	SAFETY Health & Safety Fuel Spillage Safety First Aid	P. 5
4.	OPERATING INSTRUCTIONS a. Boiler controls b. Operating procedure c. Burner lockout / resetting	P.6-7
5.	BOILER TECHNICAL SPECIFICATIONS Boiler Diagrams, Dimensions & Specifications	P. 8 - 11
6.	BURNER TECHNICAL SPECIFICATIONS Oil Burner Outputs Specification Riello oil burner specification & technical details	P. 12 - 15
7.	WIRING SPECIFICATIONS Thermostat Control & Wiring	P. 16
8.	INSTALLATION Positioning Boiler Flue Systems Boiler siting Regulations & Standards Ventilation and Combustion Air 1. Conventional Flue 2. Balanced Flue Domestic Htg. & H.W. Systems, Electrical Supply	P. 17 - 21
9.	FLUE SYSTEMS Important notice Important Balanced flue systems Concentric flue systems High Level Balanced Flue systems Flue installation instructions	P. 22 - 27
10.	OIL SUPPLY Oil storage tank siting Flexible oil pipe(s) Single pipe system Two pipe systems Tigerloop single pipe systems Regulations & Standards	P. 28 - 29
11.	COMMISSIONING Procedures Handing over	P. 30
12.	SERVICING Recommended service intervals The oil tank The boiler The Burner	P. 31
13.	FAULT FINDING BURNER	P. 32
14.	SPARE PARTS Burner P. 33 Popular/Boilerhouse P. 34 Kitchen P. 35 Heat Pac 'S' P. 36 Heat Pac 'S' Turret P. 37 Heat Pac Slimline P. 38 Control Unit P. 39 View Glass P. 40 Baffles P. 41	P. 33 - 41
15.	REPORTS & RECORDS Service Record P. 42 Commissioning Record P. 43 Notes P. 44 OFCERT Standard P. 47 Attention Installer P. 48	P. 42-49

INSTALLATION & COMMISSIONING:

Boilers must be installed, commissioned and serviced by qualified and experienced persons and as set out in the Installation Manual, using correct test equipment.

EXPANSION VESSEL:

Total water content of system and boiler must be calculated to determine the correct size of pressure vessel.

WARNING:

The manufacturer cannot accept responsibility for any damage to persons, animals or property due to error in installation or in the burner adjustment or due to improper or unreasonable use or non observance of the technical instruction enclosed with the burner, or due to the intervention of unqualified personnel.

GUARANTEE:

- **All Firebird oil Boilers have a 2 year comprehensive warranty which extends to 5 year on the boiler shell.**
- **The Guarantee card must be fully completed and returned to Firebird within 28 day's of complete installation & commissioning.**
- **Consumable components, the nozzles and the oil hose are excluded.**
- **The terms laid down on the Guarantee must be adhered to.**

FOREWORD

We would like to thank you for purchasing a high efficiency Firebird domestic central heating oil fired boiler. This instruction manual is produced for the reference and guidance of qualified installation engineers such as those who are OFTEC registered. EU legislation governs the manufacture, operation and efficiency of all domestic central heating oil boilers. Our boilers and burners will are supplied as matched units tested and approved to OFTEC Standard OFS Al00.

FIREBIRD Boilers are full manufacturing members of OFTEC (Oil Firing Technical Association) and are participating in its Boiler testing and approvals programme to comply with OFS A100 and EC Efficiency Directive.

Boilers must be installed, commissioned and serviced by qualified and experienced engineers (OFTEC approved/competence certified required in UK.) It is the responsibility of the Installer/Householder to ensure that the boiler is properly commissioned. Failure to do so may invalidate the boiler Guarantee and extended warranty.

All appropriate OFTEC manuals and BS Standards should be studied and their requirements adhered to and used in conjunction with these instructions. This manual includes a list of some BS Standards and Building Regulations.

OFTEC is conducting training and registration of engineers and this is to be commended, as reading of this manual alone for installation and servicing procedures cannot replace the critical advantage provided by training and years of experience.

1 INTRODUCTION

The Firebird range of Oil Boilers includes the Firebird S Range, Kitchen Model, Room Sealed and Boilerhouse models. The range is further extended with the Popular Conventional flue Boilerhouse models, Heat Pac Outdoor models.

All units give clean combustion while Kitchen-quiet operation is a feature of balanced flue indoor models. The entire range is complemented by a highly efficient matching pressure jet burner which produces very low NO_X emissions.

A drain-off cock is fitted inside the boiler beside the burner and there are flow and return connections provided under top lid of the boiler for connection to the heating and hot water systems. As all servicing can be carried out from the front, the boiler many be fitted under a kitchen worktop.

The burner is factory set for use with C2 kerosene to BS 2869:1998. However, **Class D fuel to BS 2869:1998 (gas oil) may only be used on a conventional flue installation, a oil pre-heater may be necessary.**

To ensure the highest standards of installation & safety, it is important that the boiler be installed in compliance with the following regulations where applicable.

All **CURRENT** editions of the appropriate Building Regulations:-

Part L & J	**England & Wales**
Part F	**Section III Scotland - Conservation of Fuel Power**
Part L	**Northern Ireland - Conservation of Fuel Power**
Part J	**Republic of Ireland - Conservation of Fuel Power**
BS 5410	Part 1 1997. Code of practice for Oil Firing Installations.
BS 799	Part 5 1987. Specification for Oil Storage Tanks.
BS 4876 1984.	Performance requirements for oil burning appliances.
BSEN 12828:2003	(UK National Annex). Heating Systems in Buildings - Designed for water based heating systems
BS 7074	Part 1 1989. Application, selection and installation of expansion vessels and ancillary equipment for sealed water systems.
BS 5446 1990.	Installation of hot water supplies for domestic purposes.
BS 7593 1992.	Code of Practice for treatment of water in heating systems.
BS 715 1989.	Metal flue pipes, fittings, terminals and accessories.
BS 1189 1989.	Clay flue linings and flue terminals.
BS 4543 part 3 1990.	**Factory made insulated chimneys for oil fired appliances.**
BS 6700.	Design, installation, testing and maintenance of Services supplying water.
BS 7671.	Current IEE Regulations. Local Water Undertaking Bylaws. Water supply (water fittings) Regulations 1999. The Control of Pollution (Oil) Regulations.

In addition, the work must comply with OFTEC Installation Requirements for oil fired boilers and oil storage tanks.

The installer should also be aware of his/her responsibilities under The Health and Safety at Work Act. The interests of safety are best served if the boiler is installed and commissioned by a competent engineer, OFTEC trained and Registered. If not a Building Notice is required in England & Wales. Other parts of the British Isles including the Channel Islands also require notification to building Control.

It is the responsibility of installer and everyone concerned with any aspect of installation to ensure that all applicable standards and regulations are fully adhered to.

OFTEC also publish excellent guides including: Safe Working Practices for Oil Firing Technicians' - OFTEC Technical Book Three (Installation requirements for Oil Fired Boilers and Oil Storage Tanks) - OFTEC Technical Book Four (Domestic Heating Systems) and it is recommended that these should adhered to Domestic Heating Design Guide.

COPIES OF BRITISH STANDARDS MAY BE PURCHASED DIRECT FROM:
BSI (Customer Services),
389 Chiswick High Rd., London W4 4AL. Tel.: 0181-9967002 Fax: 0181-9967001
International and EC Standards are also available from above.

OFTEC PUBLICATIONS ARE AVAILABLE FROM:-
OFTEC, Oil Firing Technical Association,
Foxwood House, Dobbs Lane, Kesgrave, Ipswich. IP5 2QQ
www.oftec.org

BOILER INSTALLATION:

BS 5410 : Part 1 1997 gives the requirements for domestic boiler and oil storage installations.

For boilers installation with regard to cleaning and flushing and providing inhibitors as are followed for any other boiler. Manufacturers instructions must always be followed together with the requirements of BSEN 12828, 2003 & BS EN 12831, 2003, which supersede BS 5449 1990, and the statutory requirements of the Building Regulations.

HEALTH & SAFETY INFORMATION

Under the Consumer Protection Act 1987 and Section 6 of the Health and Safety Act 1974, we are required to provide information on substances hazardous to health.

Insulation and Seals

Ceramic Fibre, Alumino - Silicone Fibre material are used for boards, ropes and gaskets. Known hazards are that people may suffer reddening and itching of the skin. Fibre entering the eye will cause foreign body irritation. It may also cause irritation to the respiratory tract.

Precautions should be taken by people with a history of skin complaints or who may be particularly susceptible to irritation. High dust levels are only likely to arise following harsh abrasion. Suitable personal protective equipment should be worn where appropriate.

Generally, normal handling and use will not give discomfort. Follow good hygiene practices, wash hands before consuming food, drink or using the toilet.

First Aid - Medical attention should be sought following eye contact or prolonged reddening of the skin.

The small quantities of adhesives and sealants used in the product are cured. They present no known hazards when used in the manner for which they are intended.

THIS PRODUCT HAS BEEN DESIGNED TO THE FOLLOWING STANDARDS:

EMC Directive
(Electromagnetic compatibility) 89/336/EC
Standards:
EN 61000-6-1: Electromagnetic Compatibility Generic Standard - Immunity for residential, commercial and light industrial environments. (Feb.2001)

EN 61000-6-3: Electromagnetic Compatibility Generic Standard - Emission standard for residential, commercial and light industrial environments. (Feb.2001)

LV Directive
(Low voltage) 73/23/EEC
Standard:
IEC 60335-1: Household and similar electrical appliances - Safety (May 2001)

Boiler Efficiency Directive 92/42/EEC
Standard:
BSEN 304: Oil boilers with forced draft burners.

FUEL SPILLAGE

1. Switch off all electrical and other ignition sources.
2. Remove all contaminated clothing to safeguard against fire risk and skin damage. Wash affected skin thoroughly with soap and water and remove clothing to a safe well ventilated area and allow to air before cleaning.
3. Contain and smother the spill using sand or other suitable oil absorbent media or non-combustible material.
4. Do not allow fuel to escape into drains or water courses. If this happens, contact the relevant authorities in your area. (Ireland Only)
   Contact The Environment Agency on 0800 807060 (UK Only)
5. Consult local Authority about disposal of contaminated soil.

SAFETY

Safe use of Kerosene and Gas Oil.

These fuels give off a flammable vapour when heated moderately. Vapour ignites easily, burns intensely and may cause explosion. The vapour can follow along at ground level for considerable distances from open containers and spillages collecting as an explosive mixture in drains, cellars, etc.

Fuels remove natural oils and fats from the skin and this may cause irritation and cracking of skin. Barrier cream containing lanolin is highly recommended together with good personal hygiene and where necessary appropriate personal protection equipment. (P.P.E.)

Gas oil may also cause irreversible damage to health on prolonged or repeated skin contact.

Always store fuels in a properly constructed and labelled tank. Always handle fuel in open air or well ventilated space away from sources of ignition and refrain from smoking.

Always drain fuel using a proper fuel retriever, funnel or mechanical siphon. Never apply heat to a fuel tank, container or pipework. Never siphon fuel through tube by mouth. If accidentally swallowed contact doctor immediately and do **NOT** induce vomiting. Avoid inhaling fuel vapour as this can cause light headedness and seriously impair judgement.

FIRST AID

If fuel is accidentally swallowed:-

* Seek medical attention immediately. Do NOT induce vomiting.

If fuel is splashed into eyes:-

* Wash out with running water for at least ten minutes and seek medical attention.

(a) BOILER CONTROLS

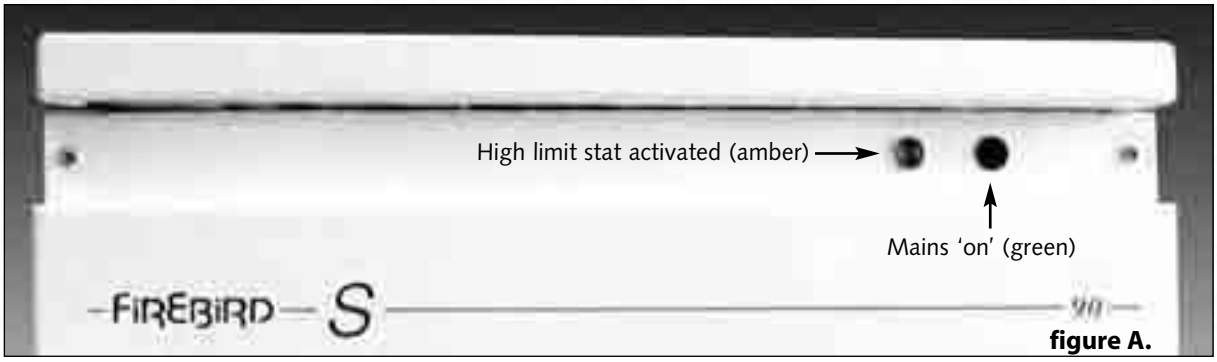

figure A.

(b) OPERATING PROCEDURE (All models)

TO START THE BOILER FOLLOW THIS SEQUENCE:

- Turn on fuel supply.
- Switch power supply to boiler 'ON'.
- For Model S remove front cover.
- Activate the 'mains on' switch.
- Set the boiler thermostat to the required temperature (figure B). The boiler thermostat controls the boiler operation by automatically maintaining the required boiler water temperature output. Safe operation is also maintained by the burner control system which provides the required ignition and shut off sequence. If the optional timer control is fitted this will automatically switch the boiler off and on when heat is required.

THE BOILER CAN BE TURNED OFF BY ANY OF THE FOLLOWING MEANS:

- Turn the timer control (if fitted) to OFF.
- Turn the boiler thermostat to OFF.
- Turn the mains 'ON' switch to OFF.
- Turn OFF the mains electrical supply to the boiler.

WHEN SERVICING ALWAYS SWITCH OFF THE MAINS SUPPLY TO THE BOILER.

figure B.

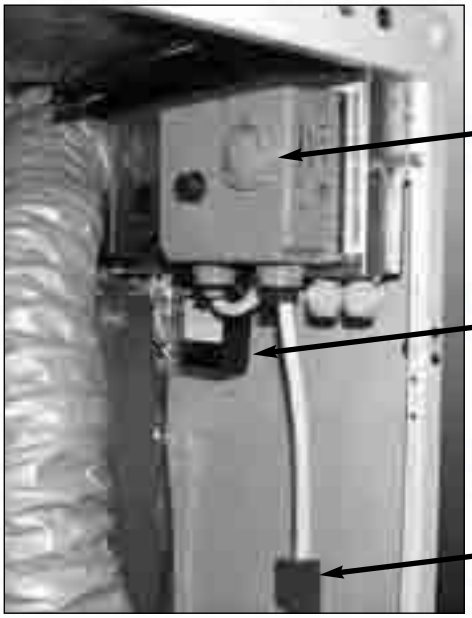

(c) BURNER LOCKOUT

To reset when Lock-out light shows: Press glowing reset button on burner control box.

Reset Button Inside Burner Box

The boiler is factory fitted with a burner control box lockout safety feature which operates automatically if a fault occurs in the burners operation. Should this occur, the light on the front of the burner - See above - will illuminate and its cause must be investigated. This could be caused by:

A. An interruption in the fuel supply. (Eg. empty oil supply tank)
B. An electrical supply fault.
C. A fault with the burner or its safety control system.
D. The failure of a component. (Eg. photo cell)
E. Worn or dirty oil nozzle.

Before attempting to restart the boiler the front panel and the burner cover should be removed and a visual check made for any obvious problems such as oil leaks, loose connections etc.

ENSURE OIL TANK CONTAINS CORRECT GRADE FUEL.

TO RESTART THE BOILER

1. Press reset button (see diagram above)
2. Ensure that the boiler thermostat, time switch (if fitted) and any external controls connected to the boiler are set to call for heat.
3. Check that the oil supply valves are open and that there is sufficient oil in the tank.
4. Check that the burner lockout light is unlit and with the 'mains ON' the boiler will be ready to commence its start sequence.

HOW TO BLEED AN OIL PUMP

See Page 15 - Burner Specifications. Ref: Priming Pump.

SERVICING

The boiler requires servicing on an annual basis to ensure it maintains its efficiency, continues to perform reliably and as a regular check on its built-in safety features.

It is important that servicing should be conducted by a competent engineer, preferably one who is OFTEC trained and registered.

Firebird S. Kitchen Model Diagrams

Firebird S. Kitchen Model

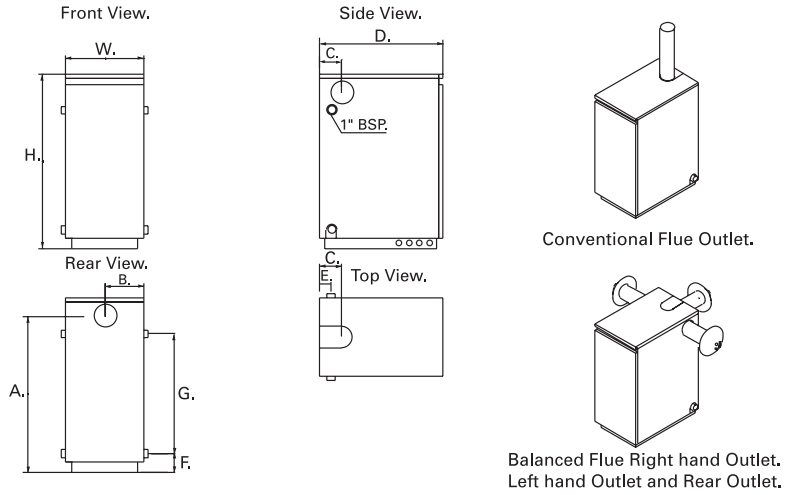

50-70/70-90				90-120				120-150				150-200			
H.	845mm	B.	190mm	H.	845mm	B.	220mm	H.	1050mm	B.	221mm	H.	1055mm	B.	232mm
W.	380mm	C.	140mm	W.	440mm	C.	140mm	W.	442mm	C.	175mm	W.	462mm	C.	165mm
D.	595mm	E.	85mm	D.	595mm	E.	85mm	D.	705mm	E.	95mm	D.	790mm	E.	95mm
A.	745mm	F.	60mm	A.	745mm	F.	60mm	A.	925mm	F.	115mm	A.	925mm	F.	115mm
		G.	590mm			G.	590mm			G.	640mm			G.	640mm

Firebird S. Kitchen Model

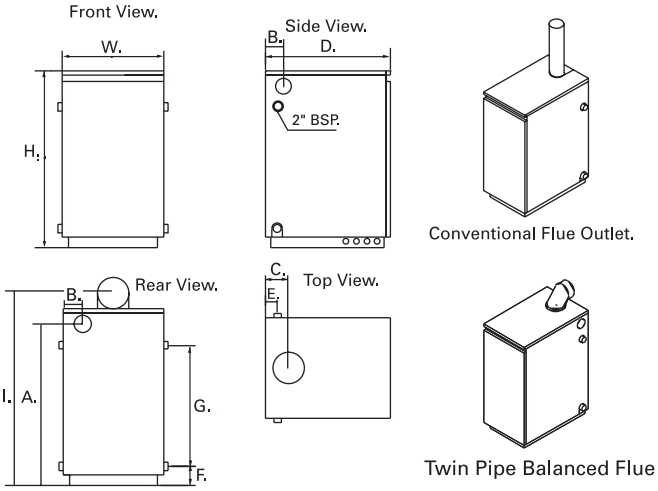

200-250				250-310			
H.	960mm	C.	190mm	H.	1015mm	C.	190mm
W.	510mm	E.	95mm	W.	580mm	E.	65mm
D.	820mm	F.	115mm	D.	945mm	F.	135mm
A.	885mm	G.	675mm	A.	930mm	G.	700mm
B.	90mm	I.	1115mm	B.	90mm	I.	1165mm

Firebird S. Boiler House Dimensions

Firebird S. Boiler House Model

CONVENTIONAL.

ROOM SEALED (SNORKEL)

Building Reg. & BS Require a base tray for this design of unit.

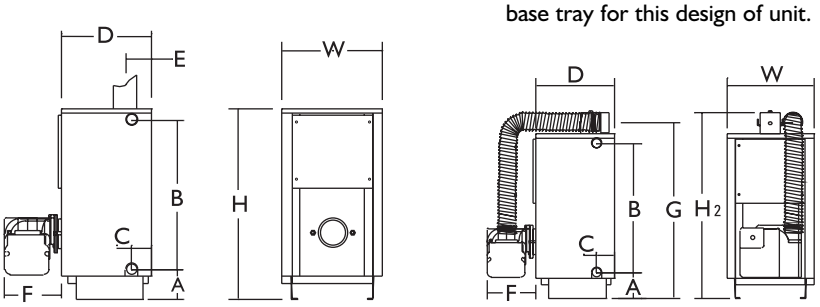

MODEL	H	W	D	A	B	C	E	F	G	H2
50/70	690	395	355	60	590	80	135	200	740	785
70/90	690	390	355	60	590	80	135	200	740	785
90/120	690	450	355	60	590	80	135	200	740	785
120/150	855	460	415	110	640	80	145	280	935	955
150/200	860	470	495	120	640	80	145	280	935	955
200/250	860	520	545	115	675	75	160	280	1110	1210
250/310	920	575	660	135	705	75	170	280	1170	1270

2-C Firebird S. Boiler Specifications

OUTPUT RANGE	**50-70**	**70-90**	**90-120**	**120-150**	**150-200**	**200-250**	**250-310**
PRESSURE JET OIL BURNER	RIELLO - SEE SECTION 2D BURNER SETTINGS (ECOFLAM & BENTONE STERLING OPTIONS AVAILABLE)						
FLOW & RETURN CONNECTIONS	4x1"BSP	4x1"BSP	4x1"BSP	4x1 1/2"BSP	4x1 1/2"BSP	4x2"BSP	4x2"BSP
DRAIN OFF CONNECTION	1/2 BSP SOCKET & PLUG FITTED ON ALL MODELS						
FLUE OPTIONS							
A. CONVENTIONAL FLUE	4"	4"	4"-5"	6"	6"	7"	7"
B. BALANCED FLUE	5"O.D.	5"O.D.	5"O.D.	6"O.D.	6"O.D.	8"O.D.	8"O.D.
CONVENTIONAL FLUE DRAUGHT	MINIMUM: 0.04 INCHES WATER GAUGE. MAXIMUM 0.15 INCHES W.G.						
MAXIMUM OPERATING PRESSURE	3 BAR	3 BAR	3 BAR	3 BAR	3 BAR	3 BAR	3 BAR
TEST PRESSURE	4.5 BAR						
WEIGHT "in Kg"							
BOILER. BOILERHOUSE	80	82	95	131	150	170	230
BURNER	13	13	13	15	15	15	15
WHITE CASED BOILER & BURNER	105	107	118	161	180	202	266
WATER CONTENT IN LITRES	19	19	24	28	37	53	65
TEMPERATURE CONTROL	**CONTROL THERMOSTAT:** ADJUSTABLE BETWEEN 60°C - 80°C.						
	LIMIT THERMOSTAT: MANUAL RESET LIMIT THERMOSTAT FACTORY SET AT 110°C.						
ELECTRICAL SUPPLY	230v. AC 50Hz 5 AMP FUSE						
FUEL	USE C2 KEROSENE IN BALANCED FLUE INSTALLATIONS ONLY. Class D GAS OIL (CF Option).						

Heat Pac Diagrams & Specifications

SLIMLINE HEAT PAC

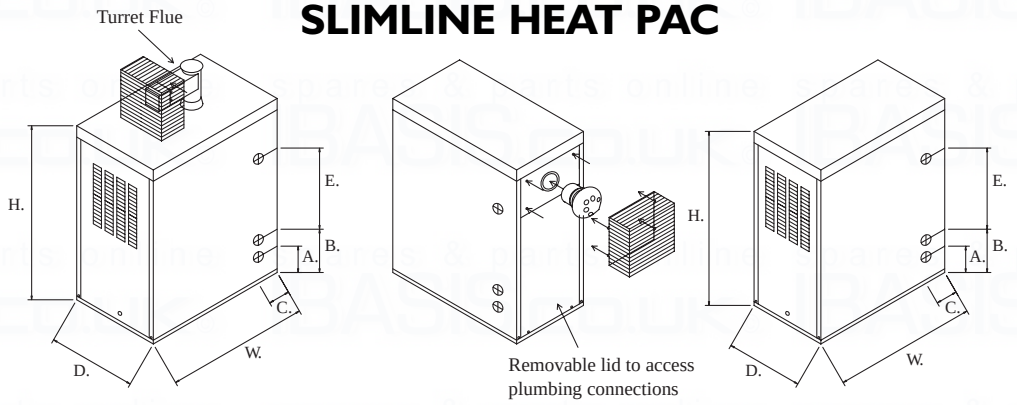

Heat Pac	Outline Dimensions			Plumbing Access Point Dimensions			
MODEL	D	W	H	A	B	C	E
50-70-90	410	760	925	140	230	115	480
90/120	470	760	925	140	230	115	480

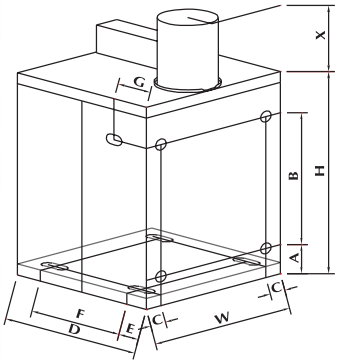

HEAT PAC

Heat Pac	Outline Dimensions				Plumbing Access Point Dimensions					
MODEL	D	W	H	X	A	B	C	E	F	G
70/90	625	655	945	310	170	575	120	100	420	175
90/120	625	710	945	340	170	575	120	100	420	175
120/150	735	720	1010	340	170	640	80	180	475	85
150/200	860	895	1025	340	170	640	90	135	590	85
200/250	860	895	1025	350	160	655	90	100	630	105
250/310	960	950	1125	350	230	700	90	100	730	100

HEAT PAC 'S'

(Northern Ireland Only)

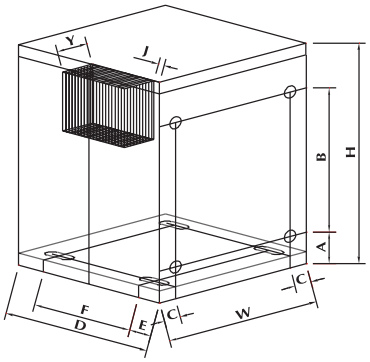

Heat Pac-S	Outline Dimensions				Plumbing Access Point Dimensions					
MODEL	D	W	H	Y	A	B	C	E	F	J
70/90 S	625	655	945	130	170	575	120	100	420	35
90/120 S	625	710	945	130	170	575	120	100	420	35
120/150 S	735	720	1010	340	170	640	80	180	475	85

BOILER THERMOSTATS - FUNCTION

The CONTROL THERMOSTAT [1] on the boiler allows the householder to vary the water flow temperature from a low of 60˚C to a high of 80˚C to 82˚C, depending on the model.

In accordance with EU boiler standards, your boiler is also fitted with a SAFETY HIGH LIMIT THERMOSTAT [2], fixed at 114˚C. This system protects the boiler in the event of the control thermostat failing and keeps the boiler safe. The safety high limit thermostat [2] will shut off the boiler and will require the limit button to be pushed to restart the boiler. If the problem re-occurs, you should call your service engineer.

In cases where the flow from the boiler is down to the heating system, fitting a PUMP OVER RUN THERMOSTAT [3] (A Pipe Stat) is recommended. This is to prevent the residual heat build up in the boiler from unnecessarily activating the high limit thermostat and thus causing nuisance. See Heat Pac Wiring Diagram in Installation Instructions on **page 16.**

PLASTIC PIPING - WARNING

The boiler thermostat control and safety system is not designed, and must not be relied on, to protect plastic pipe from overheating. Plastic pipe must never be connected directly to the boiler.

If you choose to use plastic pipe anywhere on your hot water circuits, then please consult the plastic pipe manufacturer for their instructions on how to ensure their product never overheats. Our boiler control and safety high limit thermostats are not designed to fulfil this function. (They may suggest the fitting of independent pipe thermostats, or thermostatic mixing valves linking flow and return).

• Firebird accepts no responsibility for failure of plastic piping and fittings for what ever reason.

TIME AND TEMPERATURE CONTROLS

The Building Regulations state that central heating systems must have time and temperature control on the pipe circuits (eg Thermostatic Radiator Valves / TRVs, Room thermostats, cylinder thermostats etc.) on both fully pumped and semi-gravity systems.

The burner nozzle, pump pressure and air setting may have to be changed from the factory setting to suite sight conditions.

Riello RDB 2.2 Range Burner Settings (K).

Variations in nozzle throughput, flue type & draught, oil viscosity etc. may give results differing from these laboratory performance figures. These settings were carried out using a conventional flue.

KEROSENE SETTINGS FOR FIREBIRD 'S' RANGE USING RDB 2.2 & 4.2 BURNERS

Output	Range	Nozzel Size - Angle - Type			Pump Pressure	Head Type	Air Shutter	CO_2	Air Box
70,000	59	0.5	80°	ES	8.5 bar	LD2X	1.5	11.5%	1
	68	0.6	80°	ES	8 bar	LD2X	2.8	11.5%	1
90,000	68	0.6	80°	ES	9 bar	T3	1.8	11.5%	1
	89	0.75	80°	ES	9 bar	T3	4.0	11.5%	1
120,000	89	0.75	80°	ES	9 bar	T3	4.0	11.5%	1
	120	1.0	80°	ES	8.2 bar	T3	6.5	11.5%	1
150,000	120	1.1	60°	ES	9 bar	T5	3.3	11.5%	2
	135	1.1	60°	ES	10 bar	T5	4.0	11.5%	2
	150	1.25	60°	S	7.5 bar	T5	5.5	11.5%	2
200,000	150	1.25	60°	S	8 bar	Adj.	2.5	11.5%	-
	174	1.5	60°	S	7 bar	Adj.	3.5	11.5%	-
	198	1.5	60°	S	9 bar	Adj.	5.0	11.5%	-
250,000	198	1.5	60°	S	9 bar	Adj.	5.9	11.5%	-
	222	1.75	60°	S	8.5 bar	Adj.	6.0	11.5%	-
	249	1.75	60°	S	10 bar	Adj.	6.5	11.5%	-
280,000	272	2.25	60°	S	8 bar	Adj.	8.0	11.5%	-
310,000	307	2.5	60°	S	8 bar	Adj.	8.5	11.5%	-
	340	2.5	60°	S	9.2 bar	Adj.	8.5	11.5%	-

Override settings in burner manual.

The above performance figures are based on ideal laboratory test conditions. Air shutter settings above may need to be revised to take into consideration difference in resistances between conventional and balanced flue installations, air temperature and Nozzle tolerance. Use flue gas analyzer to achieve optimum results.
Danfoss ES Nozzles are a kerosene nozzle have a tolerance of +- 5%. Danfoss S + H Nozzles are Diesel nozzles and have a tolerance of +- 15% when used with Kerosene.

Deflector Plate

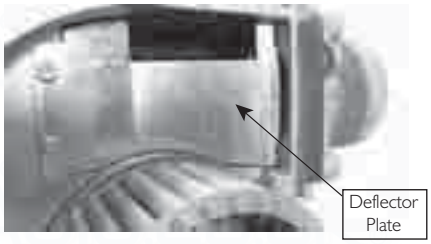

Restrictor Disc

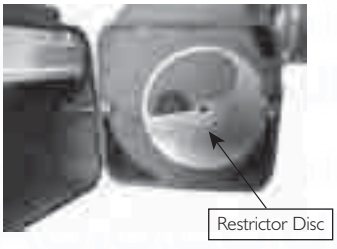

LD2X Blast Tube

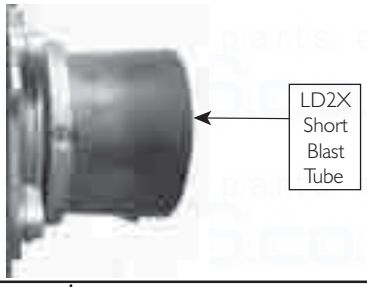

Air Box 1

Air Box 2

LD2X

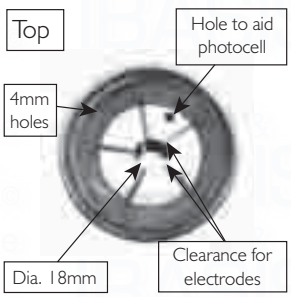

T3 Part No. 7139

RDB T3

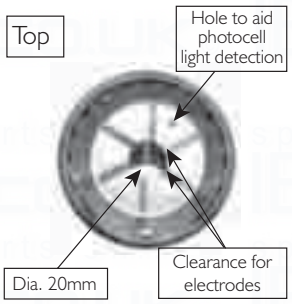

T5 Part No. 7140

RDB T5

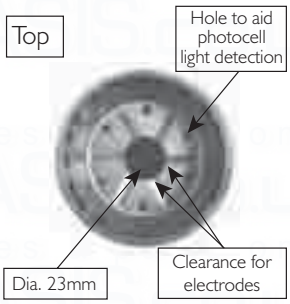

BLANK PAGE

1. BURNER DESCRIPTION

One stage kerosene burner.

The intake air temperature must not be over 70˚.

Burner with CE marking in conformity with EEC directives: EMC 89/336/EEC and Efficiency 92/42/EEC.

CE Certification No.: **0036 0316/01** as 92/42/EEC.

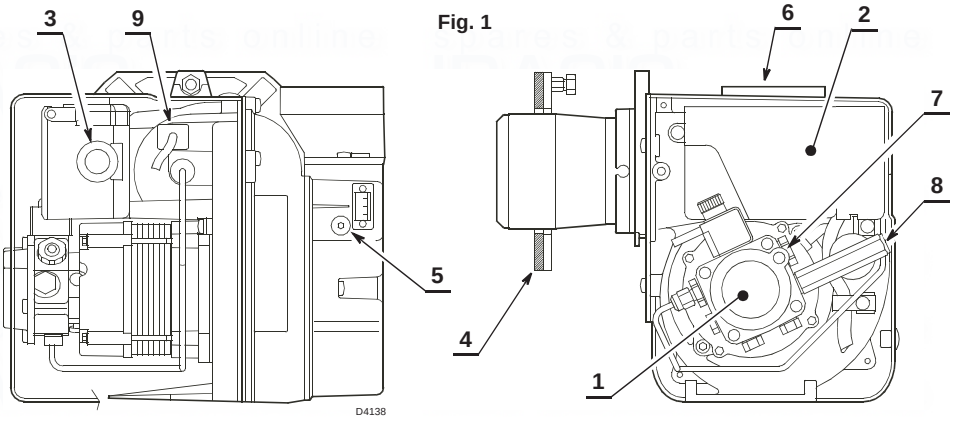

Fig. 1

1 - Pump
2 - Control box
3 - Reset button with lock-out lamp
4 - Flange with insulating gasket
5 - Air damper adjustment screw
6 - Snorkel (BF)
7 - Pump pressure adjustment screw
8 - Pressure gauge port
9 - Photoresistance

1.1 BURNER EQUIPMENT

Flange with insulating gasket . . . . . No. 1
Screw and nuts for flange . . . . . No. 1
Hexagonal key . . . . . No. 1
Plastic air cover . . . . . No. 1
Screws for flange to be fixed to boiler . . . . . No. 4
Flexible oil pipes with nipples. . . . . No. 2
Screw of by-pass pump . . . . . No. 1

ELECTRODE SETTING

Riello RDB 2.2

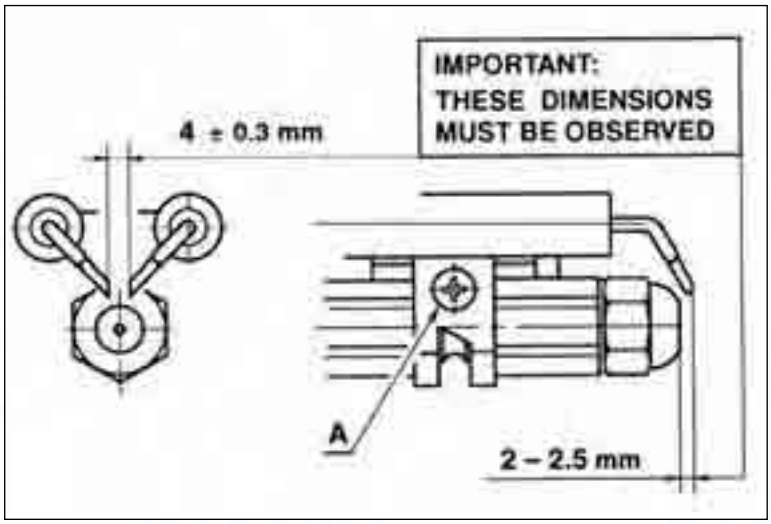

ATTENTION

Before assembling or removing the nozzle loosen screw (A) and move electrodes forward.

Riello Burner Specification

HYDRAULIC SYSTEM

WARNING

The pump is designed to allow working with one pipe.
In order to obtain two pipe working it is necessary to unscrew the return plug (2), screw in the by-pass screw (3) and then screw in return oil line (2). (See fig. 4).
In the two pipes systems, before starting the burner make sure that the return pipe-line is not clogged. An excessive back pressure would cause the damage of the pump seal.

Fig. 4

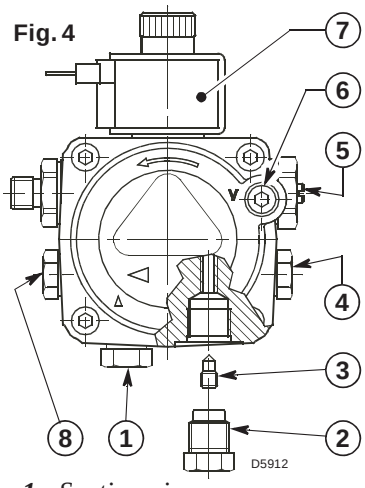

1 - Suction pipe
2 - Return line
3 - By-pass screw
4 - Pressure gauge connection & Bleed screw
5 - Pressure adjuster
6 - Vacuum gauge connection
7 - Valve
8 - Auxiliary pressure test point

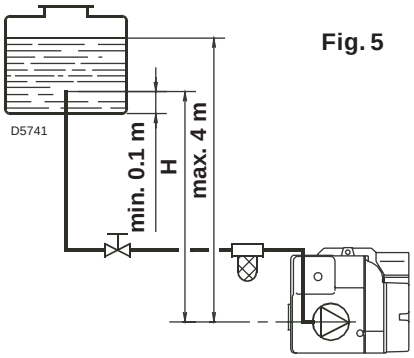

Fig. 5

H meters	L meters	
	I. D. 8 mm	I. D. 10 mm
0.5	10	20
1	20	40
1.5	40	80
2	60	100

PRIMING PUMP:

On the system in fig. 5 it is sufficient to loosen the suction gauge connection (6, fig. 4) and wait until oil flows out.
On the systems in fig. 6 and 7 start the burner and wait for the priming. Should lock-out occur prior to the arrival of the fuel, await at least 20 seconds before repeating the operation.
The pump suction should not exceed a maximum of 0,4 bar (30 cm Hg). Beyond this limit gas is released from the oil. Oil pipes must be completely tight.
In the vacuum systems (fig. 7) the return line should terminate within the oil tank at the same level as the suction line. In this case a non-return valve is not required. Should however the return line arrive over the fuel level, a non-return valve is required. This solution however is less safe than previous one, due to the possibility of leakage of the valve.

H meters	L meters	
	I. D. 8 mm	I. D. 10 mm
0	35	100
0.5	30	100
1	25	100
1.5	20	90
2	15	70
3	8	30
3.5	6	20

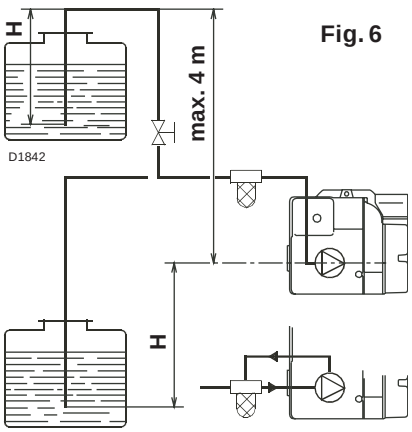

Fig. 6

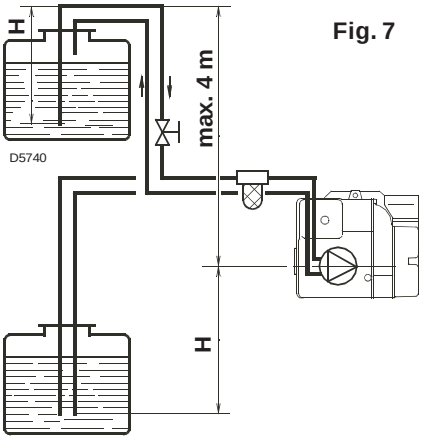

Fig. 7

Check periodically the flexible pipes conditions.
It is necessary to install a filter on the fuel supply line.

H = difference of level **L** = Max. lenght of the suction line **I.D.** = Interminal diameter of the oil pipes.

For Full details on suction line systems please refer to OFTEC Technical Information Sheet T1/139 (T32)

ELECTRICAL SUPPLY

The boiler and controls require 230V 1 phase 50Hz electric supply protected with a 5amp fuse.

THIS APPLIANCE MUST BE EARTHED.

A qualified electrician must carry out all electric wiring in accordance with current I.E.E Regulations and any local regulations which may apply.

The mains electrical supply must be taken from a double pole isolating switch with a 5amp fuse, positioned somewhere close to the boiler. Heat resisting cable must be used which can be routed into the boiler through the access provided on either side of the base.

Ancillary controls may be provided for with terminal connections in the control panel.

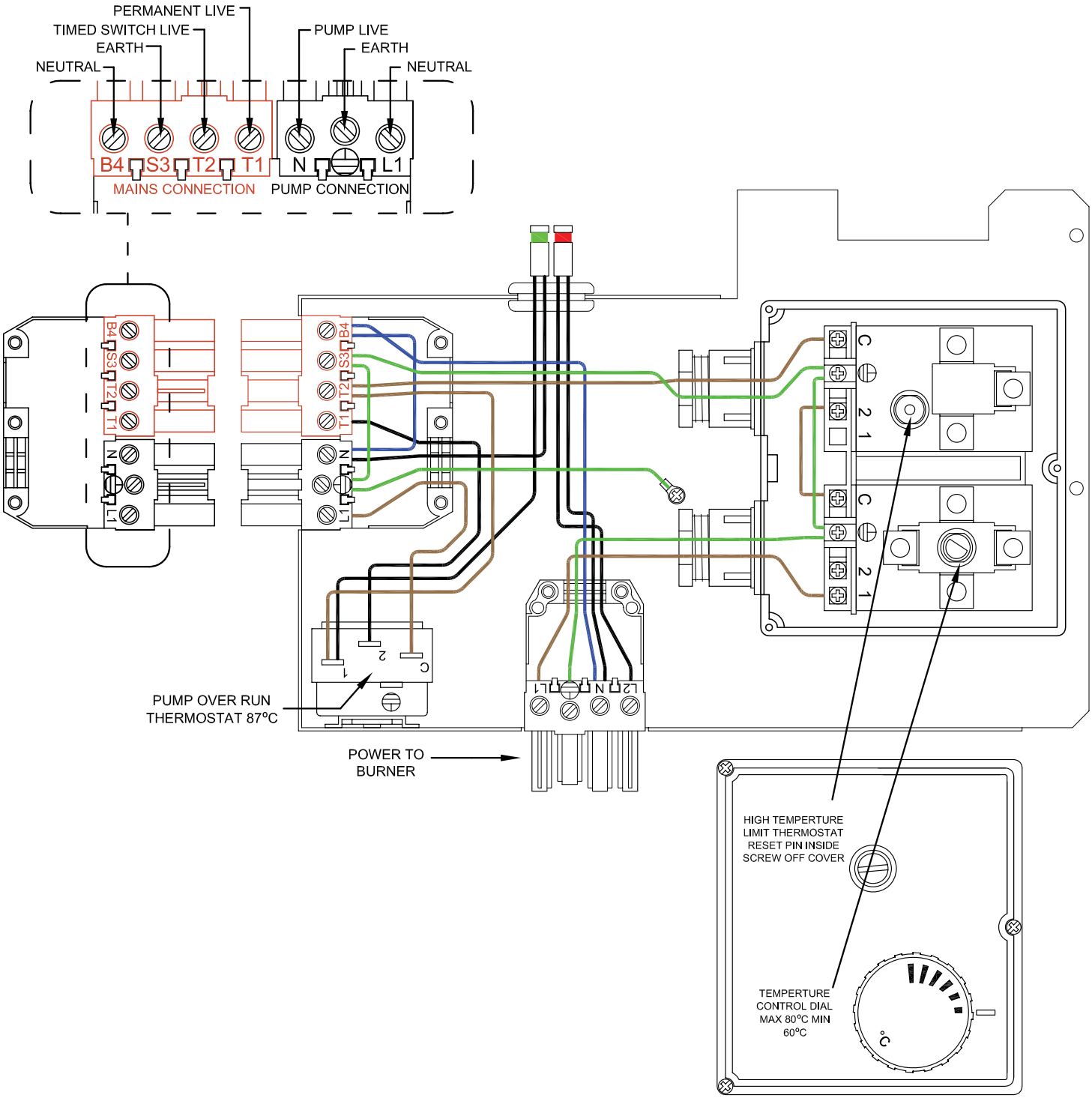

POSITIONING BOILER

Ensure that adequate clearance is available for making the water and flue connections.

As the boiler is serviced from the front, no headroom clearance is necessary but a clearance of 750mm must be available at the front of the boiler.

No special hearth is required as the boiler is fully insulated, but the floor must be level and capable of supporting the weight of the boiler and its water content.

Sound levels must also be a consideration. Whilst the Firebird is one of the quietest boilers on the market, some householders are particularly sensitive and the following points should be considered:

1. Tiled surfaces in a small room will amplify noise - particularly if the wall construction is hollow.
2. If a conventional flue passes through a bedroom it is capable of transmitting noise.
3. Low level balanced flue terminals can produce exhaust noise on the outside terminal and this should be considered when siting near adjacent property.
4. The Firebird Balanced Flue Kit has been specifically designed for Firebird's indoor boilers. The use of third party low level flue kits is not recommended and will affect its warranty.
5. The Siting of the boiler should take into account the disposal of condensate products.

- **It is recommended that a suitable corrosion inhibitor is added to the heating system.**
- **Dilution of the inhibitor due to the system being constantly topped up via mains supply will invalidate warrantee on boiler shell**
- **Existing systems should be treated with chemical cleaner and properly flushed before the boiler is fitted and corrosion inhibitor added.**

FLUE SYSTEMS

IMPORTANT

Because of the improved efficiencies of boilers under E.U. Efficiency requirements and OFS A100 Standard, it is necessary to pay extra special attention to flues and chimneys. The improved efficiency figures achieved by modern oil boilers are attained by using more of the heat (higher temperatures) heretofore allowed into flues and chimneys. This previously wasted heat helped to keep bad and poorly operating and often uninsulated flues and chimneys from condensing and causing problems. Please be fully aware of this when replacing an existing boiler. An old and poorly operating flue may need to be replaced to take full advantage of improved efficiencies and to avoid flue gases condensing and appearing as white water vapour (pluming) at flue (chimney) outlet.

New flues and chimneys should be properly insulated and constructed to prevent condensation and draughting problems. Every individual concerned with any aspect of installation should be aware of the foregoing and should have full knowledge of and **work to European, National and Local Govt. Standards and Building and Installation Regulations**.
These manufactures instructions must not in any way be mis-interpreted as over-riding the above or any statutory regulations. It is absolutely essential that the boiler is properly installed so that NO FLUE GASES can enter the building at any time. Flue pipes should be safely sealed into the wall to prevent flue gases re-entering room or building. Refer also to page 20.

NOTE:
All brick chimney constructions must comply with current building regulations and BS 5410: Part 1. Insulated factory made chimneys should comply with BS 4543.

*** DRAUGHT READINGS ARE SHOWN ON PAGE 9**

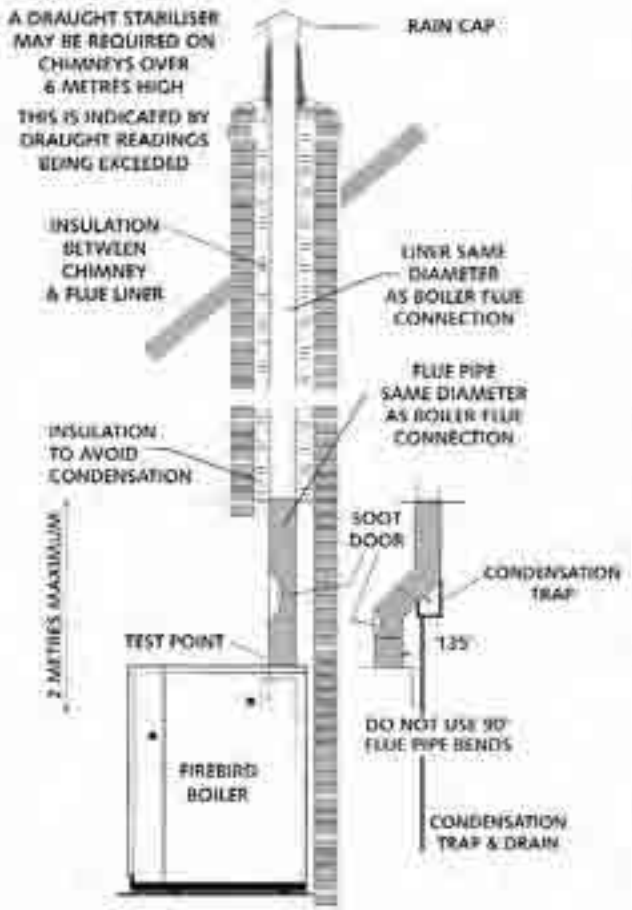

CONVENTIONAL BRICK CHIMNEY WITH LINER

BALANCED FLUE SITING

A. Horizontal from opening, airbrick, opening window etc.

B. From an internal or external corner.

C. Below an opening, airbrick, opening window etc.

Information supplied by OFTEC
Book three Aug. 2002
See note at foot of page

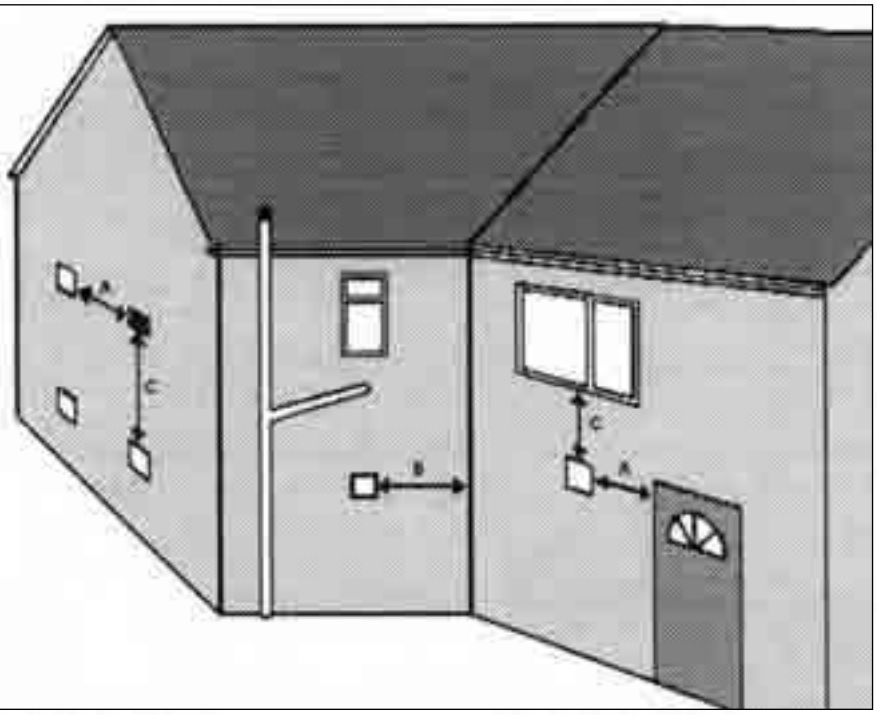

Notes:

1. The terminal should be positioned to avoid combustion products entering the building or accumulating in stagnant pockets around buildings.
2. The terminal must be protected by a guard if it is less than 2 metres above ground level or in a position where any person has access to it (i.e. a balcony).
3. A heat protection shield should be fitted if the terminal is less than 850mm from a plastic or painted gutter or less than 450mm from painted eaves.

Building Regulations

BUILDING REGULATIONS	A	B	C
Northern Ireland 1990	600	600	600
Republic of Ireland 1997	600	600	600

*Where the terminal is within 1 metre of any plastic material, such material should be protected from the effects of combustion products of fuel. There are additional general requirements in most Regulations and Standards that the flue must be positioned so that it does not cause a nuisance and permits the dispersal of combustion products.

NOTE: The Buildings Regulations clearances shown above are minimum allowed. To take account of prevailing site conditions it is advisable wherever necessary to follow the manufacturers preferred recommendation. If in doubt contact manufacturer for advice.

ALWAYS CHECK FOR ANY BUILDING REGULATIONS AMENDMENTS WHICH MAY HAVE BEEN ISSUED AFTER THE PUBLICATION OF THIS MANUAL

Clearances advised by the BRITISH STANDARDS for Open Flues, Low Level Balanced Flues and Balanced Flues fitted to Oil Fired Boilers.

THESE ARE ALSO THE BUILDING REGULATIONS FOR ENGLAND, WALES & SCOTLAND

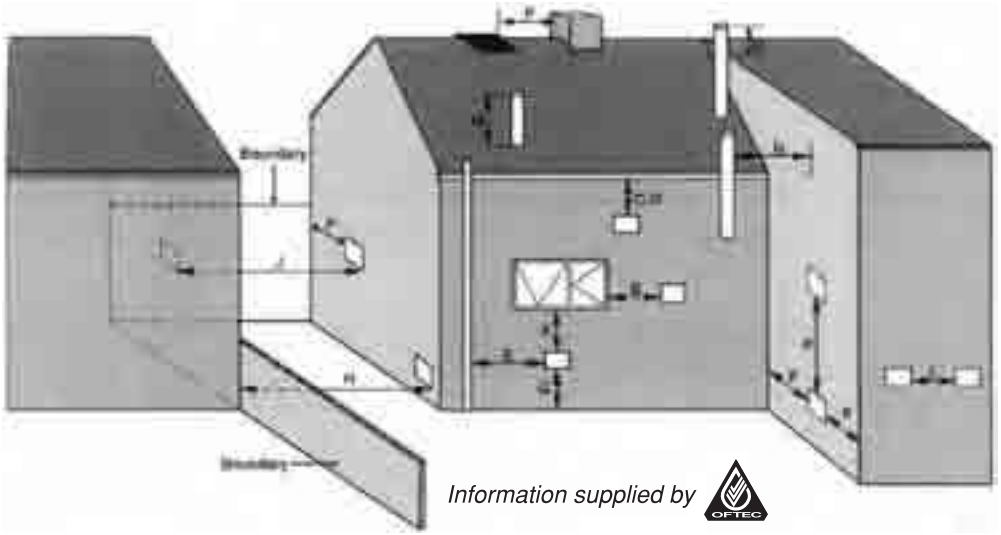

Minimum distances to terminals in millimetres as measured from top of the chimney or the rim of a low level discharge opening.

	APPLIANCE BURNER TYPE	PRESSURE JET	VAPOURISING
A	Directly below an opening, air brick, opening window etc *	600	Not allowed
B	Horizontally to an opening, air brick, opening window etc *	600	Not allowed
C	Below a gutter, eaves or balcony with protection *	75	Not allowed
D	Below a gutter or a balcony without protection	600	Not allowed
E	From vertical sanitary pipework	300	Not allowed
F	From an internal or external corner or surface or boundary alongside the terminal	300	Not allowed
G	Above ground or balcony level	300	Not allowed
H	From a surface or boundary facing the terminal	600	Not allowed
J	From a terminal facing the terminal	1200	Not allowed
K	Vertically from a terminal on the same wall	1500	Not allowed
L	Horizontally from a terminal on the same wall	750	Not allowed
M	Above the highest point of an intersection with the roof	600	1000
N	From a vertical structure on the side of the terminal	750	2300
0	Above a vertical structure less than 750mm from the side of the terminal	600	1000
P	From a ridge terminal to a vertical structure on the roof	1500	Not allowed

These notes form an integral part of the information shown above.

1. Terminals should be positioned so as to avoid products of combustion accumulating in stagnant pockets around the building or entering into buildings.
2. Appliances burning Class D oil have additional restrictions.(See 1.7.3 in Oftec Book 3 - Aug. 2002)
3. Vertical structure in N, 0 and P include tank or lift rooms, parapets, dormers etc.
4. Terminating positions A to L are only permitted for appliances that have been approved for low level flue discharge when tested to OFS A100 or A101.
5. Terminating positions must be at least 1.8 metres distant from an oil storage tank unless a wall with at least 30 mins fire resistance and extending 300mm higher and wider than the tank is provided between the tank and the terminating position.
6. Where a flue is terminated less than 600mm away from a projection above it and the projection consists of plastic or has a combustible or painted surface, then a heat shield of at least 750mm wide should be fitted to protect these surfaces.
7. For terminals used with vapourising burners, a horizontal distance of at least 2300mm is required between the terminal and the roof line.
8. If the lowest part of the terminal is less than 2 metres above the ground, balcony, flat roof or other place to which any person has access, the terminal must be protected by a guard.
9. Notwithstanding the dimensions given in the drawing and table, a terminal should not be sited closer than 300mm to combustible material.

BALANCED FLUE BOILERS

The Firebird boiler may be set for Room-sealed balanced flue operation using a Firebird condensing balanced flue kit. This kit does **not** draw **combustion air** from inside the room. **It is drawn from outside direct to burner by airpipe supplied with boiler.** Flue gases are expelled through the same kit. However, if the boiler is installed in a **compartment** or **small room**, some **ventilation air** is necessary to maintain acceptable temperature in boiler area.

Balanced flue boiler in room (eg. kitchen) does not require individual ventilation.

BALANCED - FLUE BOILERS IN COMPARTMENTS

Information supplied by OFTEC

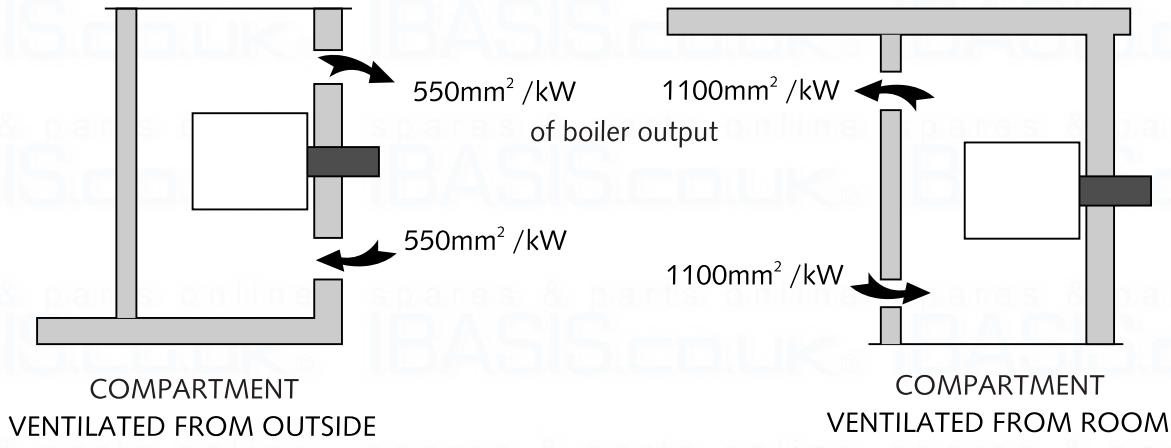

Use of any equipment other then the matching Firebird low level roomsealed concentric flue kit is not guaranteed for low level discharge and will probably invalidate the warranty.

DOMESTIC HEATING & HOT WATER SYSTEMS

HVCA Codes of Practice and BS 5449: Part 1 "Forced Circulation Hot Water Systems" should be adhered to when installing the boiler. Refer also to Regulations and Standards listed on **PAGE 4.**

ELECTRICAL SUPPLY

The boiler and controls require 230V 1 phase 50Hz electric supply with a 5amp fuse.

THIS APPLIANCE MUST BE EARTHED.

A qualified electrician must carry out all electric wiring in accordance with current I.E.E Regulations and any local regulations which may apply.

The mains electrical supply must be taken from a double pole isolating switch with a 5amp fuse, positioned somewhere close to the boiler. Heat resisting cable must be used which can be routed into the boiler through the access provided on either side of the base.

Ancillary controls may be provided for with terminal connections in the control panel.

VENTILATION AND COMBUSTION AIR

Conventional Flue Boilers
An adequate supply of **combustion and ventilation air** is essential for efficient and safe boiler operation and the openings for this should be positioned to cause least possible draught, **with no possibility of being accidentally blocked.**

Please note: The British Standard Code of Practice for Oil Firing BS5410: Part 1, requires a permanent air inlet opening of **550mm² per kW (above 5 kW)** of boiler rated output. (Note: 1kW = 3412 Btu/h).

Also, when the boiler is installed in a compartment or confined space, **ventilation** openings are required to ventilate and to avoid overheating in the boiler area.

Combustion & Ventilation air supply for conventional open flue boilers

The figures shown are free areas of grilles in mm² per kw of appliance rating (output).

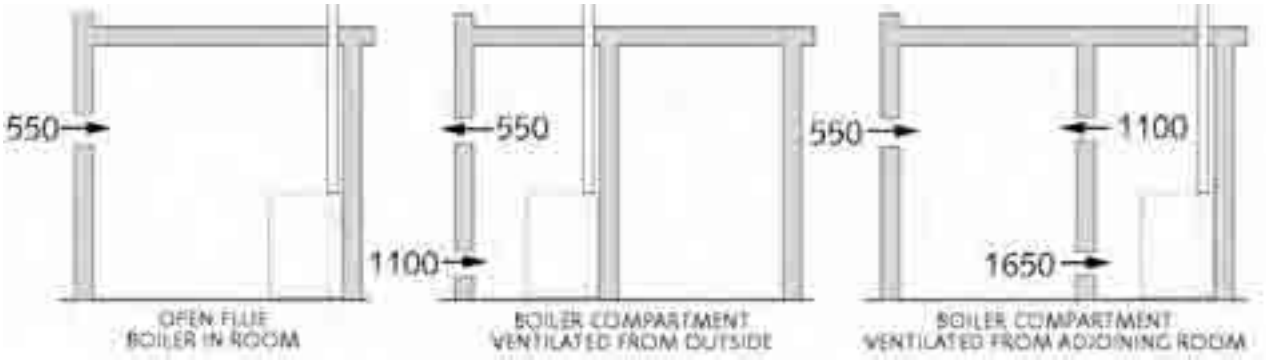

Information supplied by OFTEC

FULL TEXT of both BS 5410 Part 1: 1997 and appropriate Building Regulations for each country should be obtained and fully applied

N.B. Please Carefully Note:

A. For boiler installations in domestic garages in Scotland, Part F of Building Regulations permits **only** Room Sealed appliances to be used (Ref. OFTEC Bk. Three May 1999 page 1 (18).

B. Technical annex T1/127 to OFTEC Book Three, May 1999 page 2 (19) Para. 1, 2 states "In Scotland and the Republic of Ireland **only** Room Sealed Balanced Flue Appliances can be used in that location" (i.e. domestic garages).

Definitions

Combustion Air : Air required directly by boiler oil burner for combustion process.
Ventilation Air : Air required in room for ventilation, cooling, etc. and to promote a healthy living environment.

6-A Important Notice

Because of the improved efficiencies of boilers under E.U. Efficiency requirements and OFT A100 Standard, it is necessary to pay extra special attention to flues and chimneys. The improved efficiency figures achieved by modern oil boilers are attained by using more of the heat (higher temperatures) heretofore allowed into flues and chimneys. This previously wasted heat helped to keep bad and poorly operating and often uninsulated flues and chimneys from condensing and causing problems. Please be fully aware of this when replacing an existing boiler. An old and poorly operating flue may need to be replaced to take full advantage of improved efficiencies and to avoid flue gases condensing and appearing as white water vapour (pluming) at flue (chimney) outlet.

New flues and chimneys should be properly insulated and constructed to prevent condensation and draughting problems. Every individual concerned with any aspect of installation should be aware of the foregoing and should have full knowledge of and work to **European, National and Local Govt. Standards and Building and Installation Regulations**.
These manufactures instructions must not in any way be mis-interpreted as over-riding the above or any statutory regulations. It is absolutely essential that the boiler is properly installed so that NO FLUE GASES can enter the building at any time. Flue pipes should be safely sealed into the wall to prevent flue gases re-entering room or building
Refer also to page 16.

PREPARING BOILER FOR CONVENTIONAL CHIMNEY/FLUE OPERATION

Before installing boiler in the above mode please ensure:

A. That chimney flue is cleaned, draughting adequately, lined and not subject to downdraughts. **It is emphasised that boiler and flue should be connected properly in a manner which will not allow flue gases to enter room or building at any time from any part of the installation.**

B. That adequate unrestricted air for combustion and ventilation is provided to room in which boiler is situated - see diagram pg.20 & 21.

C. That there is no extractor fan capable of causing negative pressure in boiler room resulting in burner malfunction and flue gases being drawn back into boiler room.

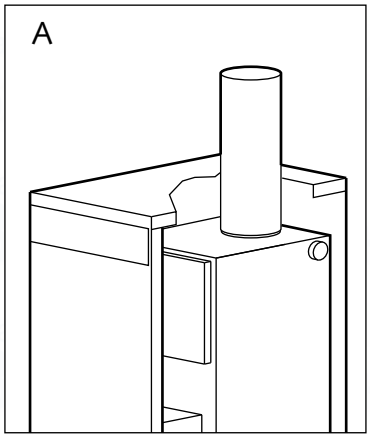

Conventional Flue Installations-

1. Remove blanking plate from top panel by pulling backwards.

2. Fit trim sleeve to flue pipe (if supplied).

3. Slide upwards and 'park' it out of the way

4. Fit flue pipe into boiler socket and properly seal with high temperature silicone mastic or non-cracking fire cement.

5. Fit white enamel top panel

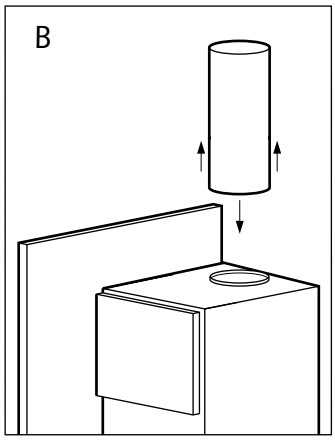

6. Fit cut-out cover plate behind flue pipe (shown in diagram)

7. Slide trim sleeve down against top panel (If Supplied)

ENSURE UNRESTRICTED AIR-SUPPLY TO BOILER ROOM. No further adjustments are required for adequate combustion-air supply. Check burner operation when installation is completed, use burner **Combustion Analyser** to ensure correct performance.
Consult separate burner manual supplied with boiler.

IMPORTANT

SINGLE PIPE LOW LEVEL FLUES ARE NOT PERMITTED

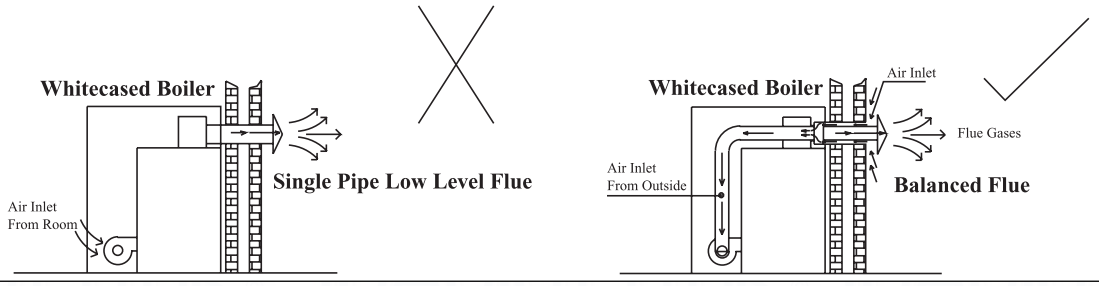

BALANCED FLUE SYSTEM

IMPORTANT: THE INSTALLER **MUST EXAMINE** THIS ILLUSTRATION CAREFULLY BEFORE PROCEEDING WITH INSTALLATION.

• Firebird do not recommend the use of a low level flue's on white cased indoor boilers.
• The Firebird low level concentric flue kit has been specifically designed for Firebird's indoor boilers. The use of third party low level flue kits is not recommended and may affect its warranty.

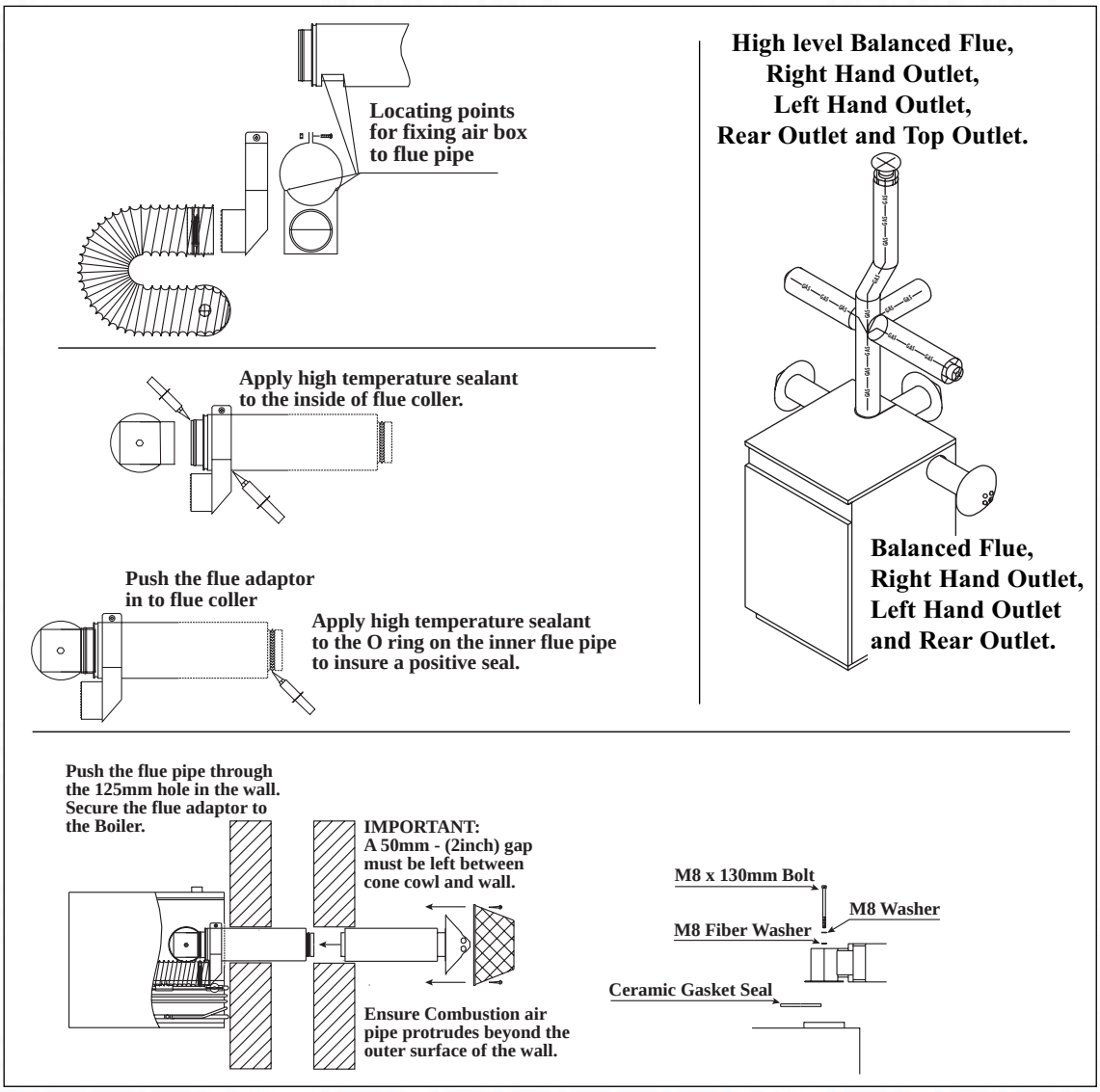

ENSURE UNRESTRICTED AIR-SUPPLY TO BOILER ROOM.

No further adjustments are required for adequate combustion-air supply. Check burner operation when installation is completed, use burner **Combustion Analyser** to ensure correct performance. Consult separate burner manual supplied with boiler.

8" Twin Pipe Flue for Firebird 250,000 and 310,000 btu's boilers. 3" (75mm) air pipe supplied with balanced flue kits

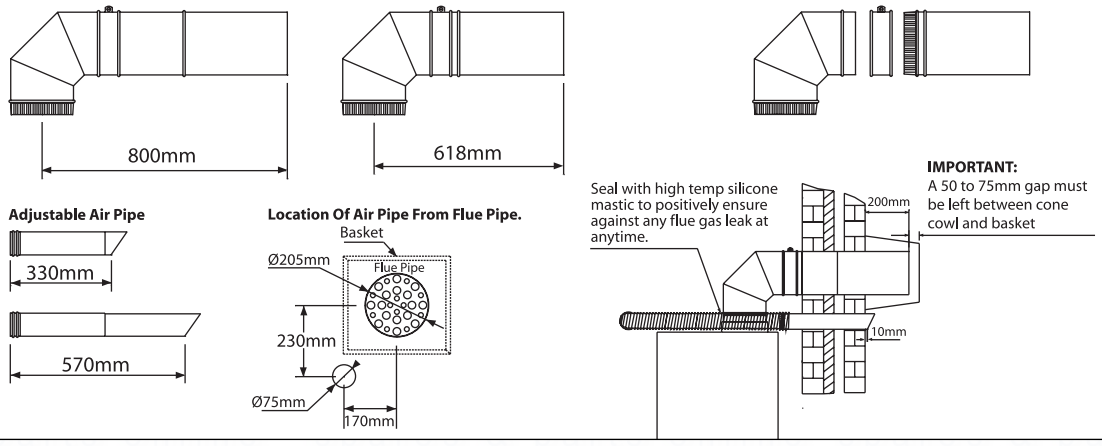

Flue Extension For Right Hand Outlet Combi.

Assembly for concentric flue when going side outlet on White cased boiler

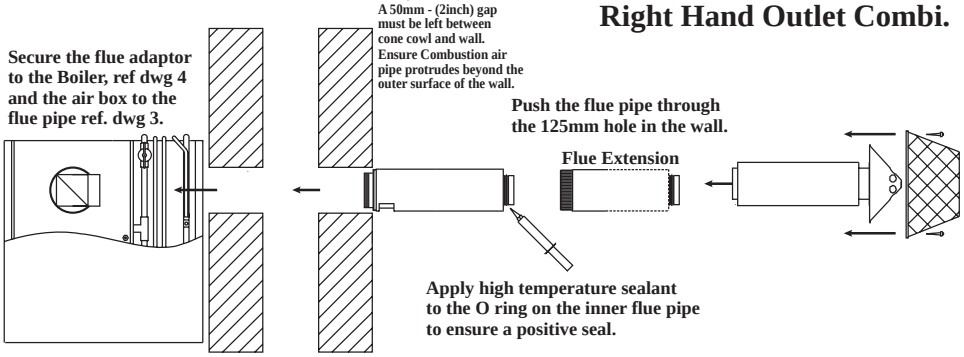

CONCENTRIC FLUE SYSTEM

5" (125mm) O.D. Concentric flue Firebird S 70,000 - 90,000 and 120,000 btu's Boilers.

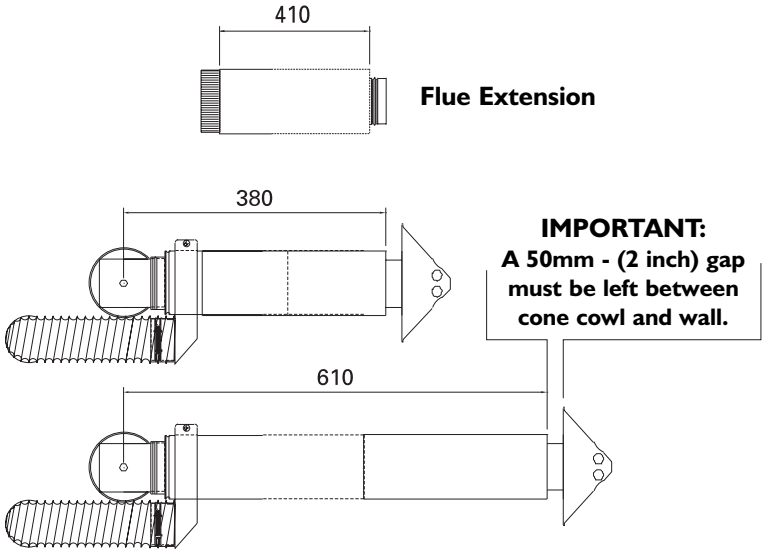

INSTALLATION INSTRUCTIONS SUPPLIED WITH FLUE KITS

HEAT PAC - Concentric Flue Assembly. Please follow all instructions and Building Regulation extracts supplied with boiler.

(A.)

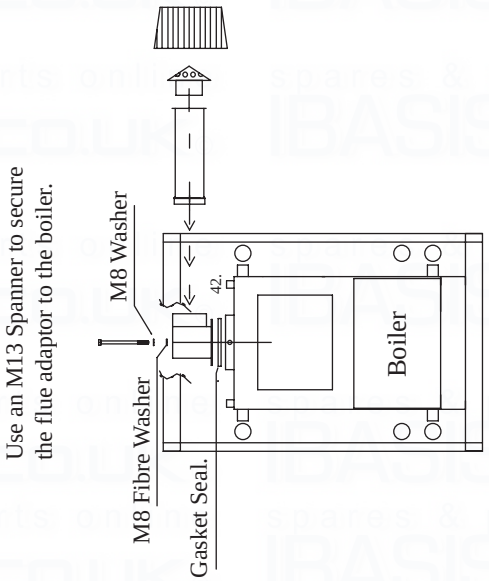

(B.)

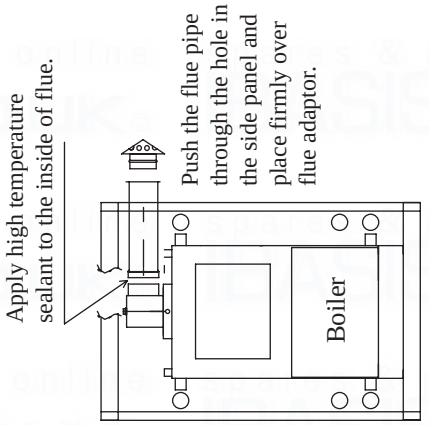

(C.)

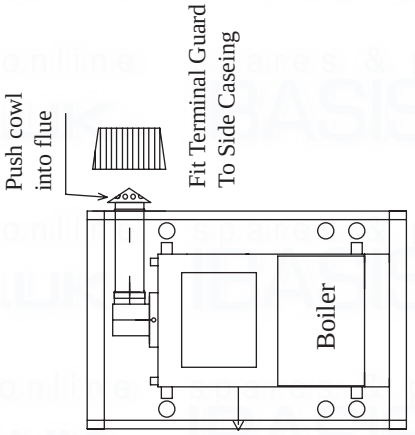

Slimline Heat Hac

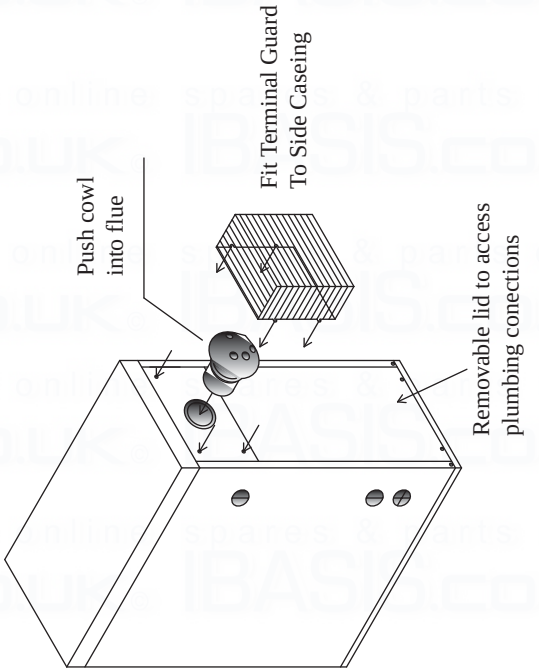

(D.)

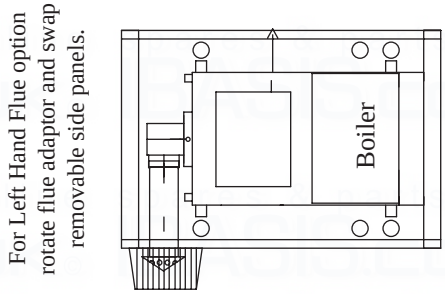

HIGH LEVEL BALANCED FLUE SYSTEMS

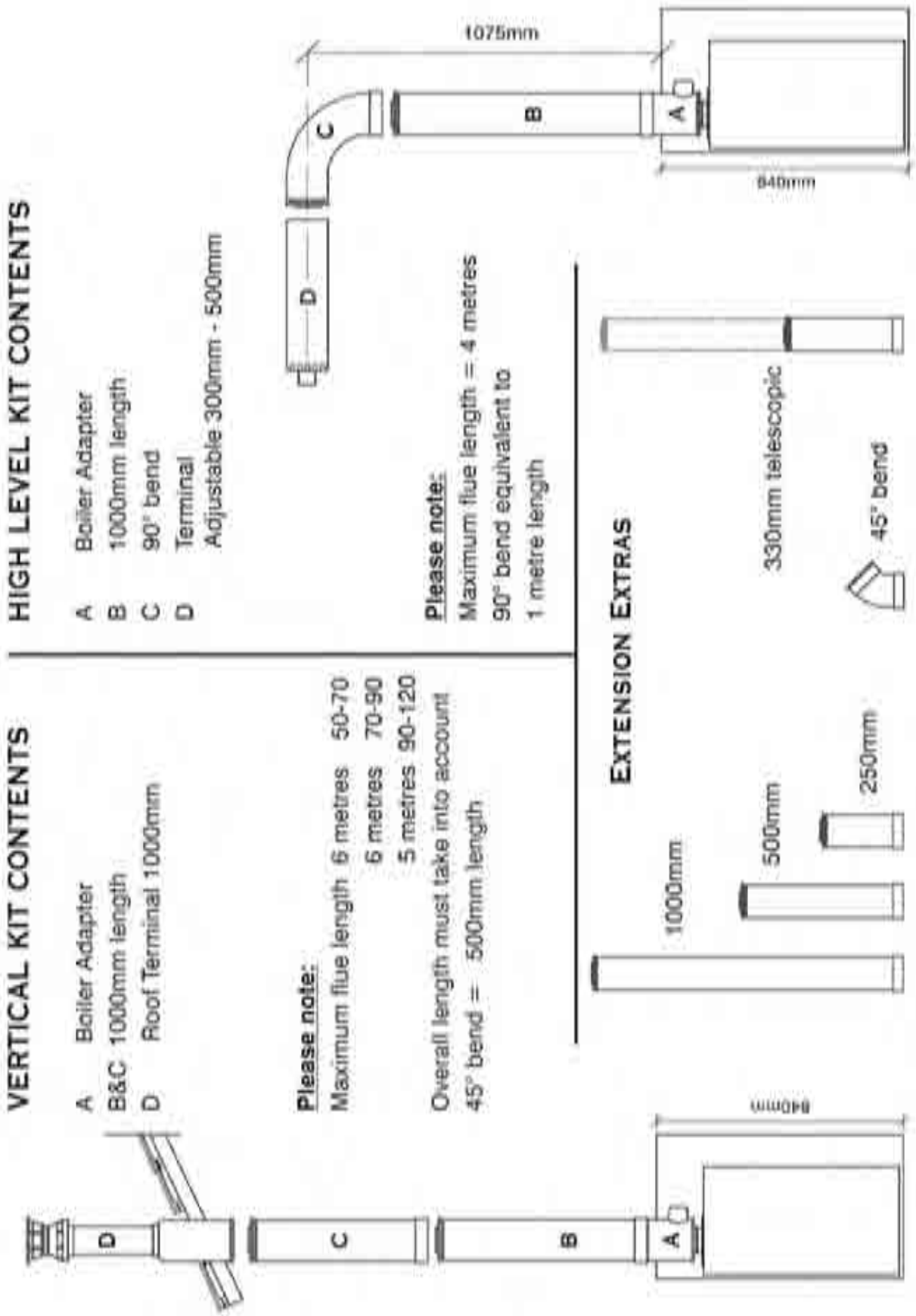

FLUE INSTALLATION INSTRUCTIONS

FLUE INSTALLATION INSTRUCTIONS

For maximum permissible flue runs see page 20.

Typically the figure given is the flue distance from the boiler to the terminal (not inclusive of terminal). A 45° elbow is given a straight equivalent of 0.5 metres and a 90° elbow is given a straight equivalent of 1.0 metre, and consideration has already been given to the diameter of the flue to be used.

(i.e. Boiler X has been given a maximum flue run of 6 metres using a 100mm flue and 10 metres using a 125mm flue.)

For long flue runs it may be necessary to fit a condensation drain. Please consult the boiler manufacturer's handbook.

INSTALLATION OF FIREBIRD FLUES

For best results using Firebird flues it is recommended to work from the terminal back to the boiler. All Firebird components are designed to be push fit. The components have male fittings one end and female fittings the other. The female fitting should always be facing towards the terminal. The straight extension pieces can be dis-assembled to help installation. The inner component should be firmly pushed onto the bottom of the previous piece until is it sat firmly home (see fig. 1). The outer component can then be slid over the inner component and pushed onto the previous piece (see fig. 2).

fig. 1

fig. 2

CUTTING FIREBIRD FLUES

Sometimes flue components need to be cut. We recommend that the piece requiring cutting should be dis-assembled. The inner piece should be cut using a sharp hack saw, taking care that the piece be cut square. To help, the inner piece should be 95mm longer than the gap between the two components to be joined. This 95mm is approximately the depth of the sockets. The outer should be 20mm shorter than the inner component. Once the cutting is finished, take care to remove all sharp edges and burrs as this can damage the inner seals upon assembly.

fig. 3

SUPPORT

All Firebird flues require support by use of brackets. It is recommended to use one bracket per metre of horizontal flue and one bracket per 2 metres of vertical flue. Brackets should be located directly under the socket section of the pipe work, where possible. Any flue run less than 90° should be treated as horizontal.

fig. 4

OIL STORAGE TANK SITING

Consult OFTEC Manuals

It is very unlikely that a fire should start from a domestic oil tank, however it does need to be protected from a fire which may originate in a building nearby. For this reason, the tank should be located at least 1.8 metres from any building and no closer than 760mm from any boundary. If it must be closer than 1.8 metres, the building wall should not have any openings other than ventilation openings. In addition, the wall should have at least 30 minutes fire resistance and extending 300mm higher and extends 300mm beyond both ends of the tank is provided between the tank and the terminating position and the wall should have a half hour resistance to an internal fire and extend 1.8 metres from any part of the tank.

A non-combustible radiation barrier is an alternative but this must meet the requirements of BS 5410 Part 1: 1997, "clause 28" Section 6.4.

Steel tanks must be mounted on brick or block piers with a waterproof membrane between the piers and tank.

See Oftec Technical Information T19

Oil storage tanks should not be sited within 1.8m of boiler flue outlets.

Do not allow household waste or hot ashes container in vicinity of oil storage tank or boiler flue outlet.

FLEXIBLE OIL PIPE(S)

A flexible burner oil hose is supplied with the boiler which must be wholly contained with in the appliance case.

Please note: A filter must not be fitted inside the boiler and all joints in the oil line <u>MUST BE OIL-TIGHT.</u> Soldered joints are not permissible. Before connecting to the boiler always flush the complete oil supply line and ensure that oil supply is completely clean and free of any dirt or foreign matter.

SINGLE PIPE SYSTEM

Where installations have the bottom of the tank above the oil burner, a single pipe system may be used.The oil burner should then be set for single pipe operation - **<u>See also manufacturers oil burner manual</u>**

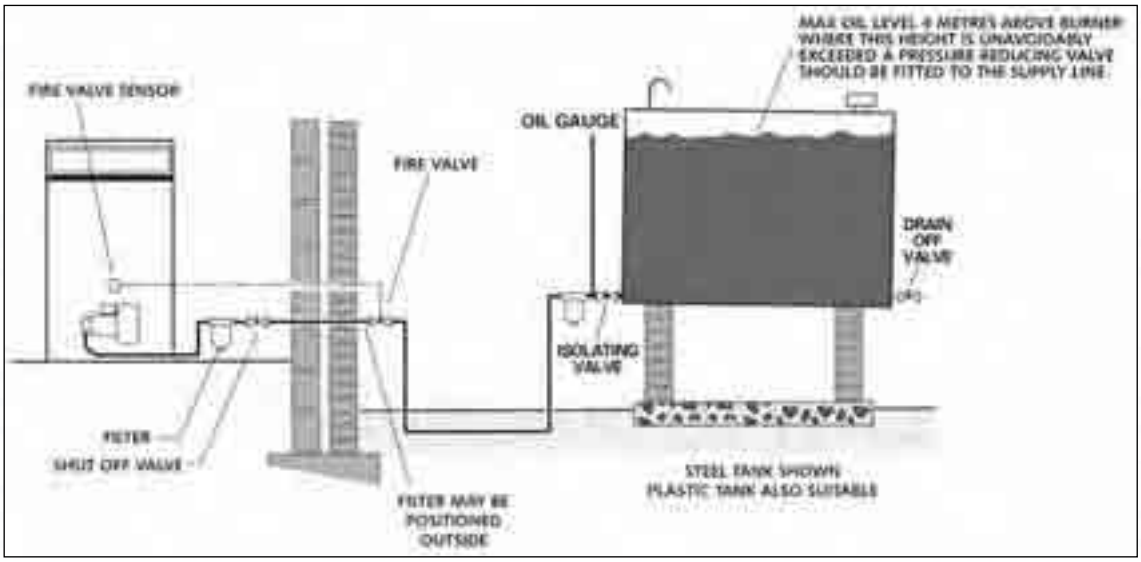

TWO PIPE SYSTEMS

Where installations have the bottom of the tank below the oil burner pump a two pipe system is required. Ensure that valves and filters are not fitted in the return line as this must be unobstructed at all times.

The oil burner pump should be set for two pipe operation as detailed in accompanying oil burner manufacturers manual, refer also to **PAGE 15** of this manual.

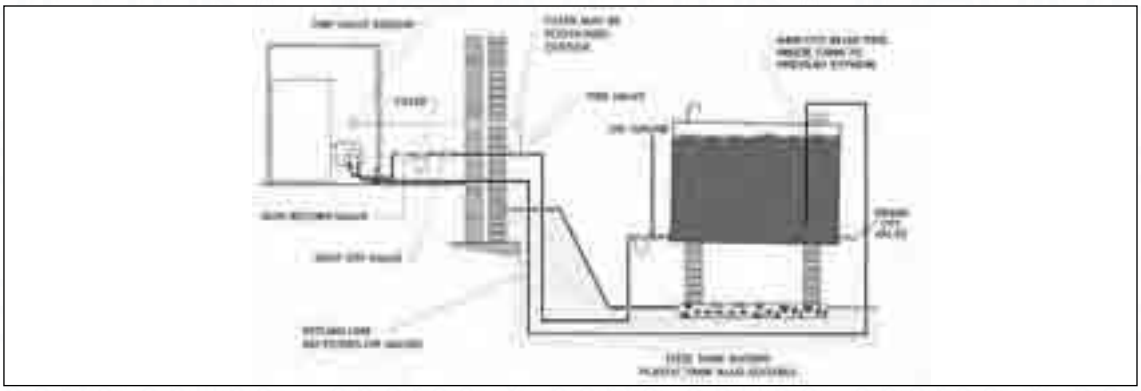

TIGERLOOP SINGLE PIPE SYSTEMS

IMPORTANT: The Tigerloop should not be fitted inside the dwelling -
See TI/139 drawing below and OFTEC manual book 3 page 2(8:1)

Where installations normally require a two pipe system but have long or impractical return line runs, a 'Tigerloop' De-aerator can be used which removes air from a single - pipe - lift oil feed. Higher lift heights can be achieved than are possible with conventional two pipe systems.

The oil burner pump should be set for two pipe operation.

INDIVIDUAL TIGERLOOP INSTRUCTIONS MUST BE IMPLICITLY FOLLOWED.

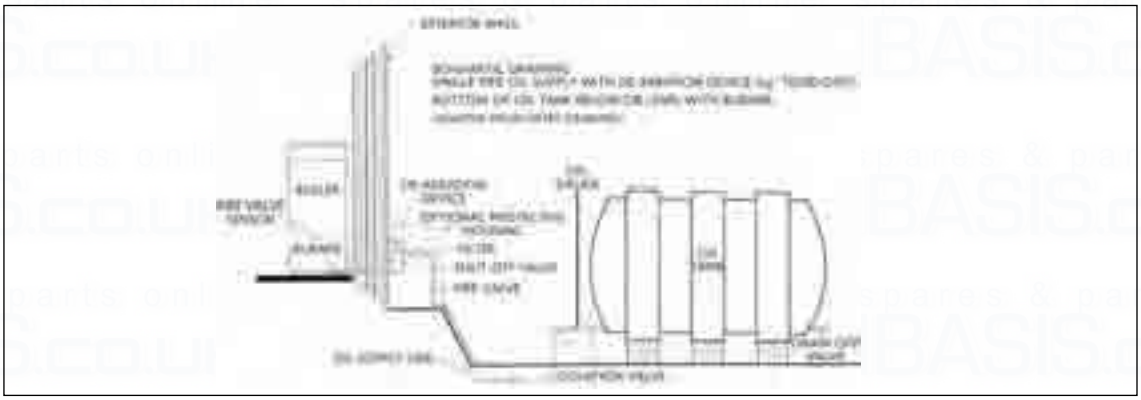

FIRE VALVES

A fire valve is an essential part of the oil supply system. It should be capable of cutting off the flow of oil outside the building in the event of a fire starting up within the boiler. The valve should be located just outside the building at the point where the oil supply line enters. It must be activated by a remote sensor located over the burner, but in a position clear of any direct radiation or excessive heat.

IMPORTANT: Fire Valves should comply with **OFTEC Standards OFS E101**
Fitting of Fire Valves should comply with **BS : 5410 Part 1**

REGULATIONS & STANDARDS

In **England and Wales,** installation in single family dwellings have to comply with the building Regulations Part J. This requires compliance with BS 5410 : Part 1 : 1997. All tanks either deemed to be at risk or with a capacity of more than 2,500 litres will require to be bunded.

For installation in **Scotland,** Building Standard Part F applies. This requires compliance with BS 5410 : Parts 1 and 2. All tanks either deemed to be at risk or with a capacity of more than 2,500 litres will require to be bunded.

Those externally installed tanks with a capacity of less than 2,500 litres will require a bund if located not more than 50 metres from a spring or bore hole, 10 metres from controlled waters and additionally where it may constitute a hazard.

The above risks and hazards are described in OFTEC Technical Information Note TI/133.

In **Northern Ireland,** the Building Regulations do not currently cover the installation of oil storage tanks.

In the **Republic of Ireland** the requirements of BS 5410 : Parts 1 and 2 are required to be complied with be Building Regulations Part J.

It is recommended that commissioning is carried out by a competent and qualified service engineer.

It should be noted that it is the responsibility of the installer to ensure that the boiler is properly commissioned. Failure to do so may invalidate the boiler guarantee and any extended warranty.

PROCEDURES

1. Oil Tank

The installation of the oil tank and supply line should comply with all the instructions shown earlier in this manual. Consult OFTEC Manual - Book No. 3, Section 2.

If a single supply line is used ensure that the bottom of the tank is above the burner. A suction line system via a de-aerator should be used where the level of the oil in the tank may fall below the level of the oil burner pump.

CHECK AND ENSURE CORRECT GRADE FUEL OIL HAS BEEN SUPPLIED.

2. The Burner

A two single pipe system may also be used in low-level tank installations. See page 21 Section 5. Please flush out oil pipe by drawing off some oil before connecting fuel pipe to burner - otherwise there is a danger of grit and dirt being forced into the burner pump, resulting in pump blockage, damage and 'lock-out'

3. The Boiler

A. Switch off the power supply, ensure that the boiler and system is full of water, all valves are open and that installation conforms with all Standards, Regulations and Instructions.

B. Check that boiler baffles are correctly positioned.

C. Check the oil supply by disconnecting the oil supply hose at the burner and running off a quantity to ensure it is free from air. then bleed air from burner pump. Refer to section 2, page 7, sketch C, Item-E.

D. If fitted, check that the time switch is 'ON' and that both room and boiler thermostats are calling for heat.

E. Reconnect electrical supply and the boiler should start. If the burner lock-out activates, this suggests air in the pump. Wait a minute or so and try again. If lock-out occurs again, air must be bled from the pump pressure gauge connection point once more.

F. View the burner flame through the sight glass - it should be bright cream/yellow without any sign of smoke. Use a smoke gun to check that the burner is burning clean.

G. Run the boiler for about fifteen minutes then take a CO_2 reading and adjust as necessary.

HANDING OVER

A thorough check of the system should be made, then the householder should receive a clear and concise demonstration of the boiler operation and any system controls.

This manual and burner manufacturers manual plus any other instructions should be handed over to the user, the guarantee card should be completed and posted, and the user advised about the importance of annual servicing.

COMMISSIONING RECORD - PAGE 43

Should be completed and a copy kept in engineers file.

NOTE: IT IS STRONGLY RECOMMENDED THAT SERVICING IS CARRIED OUT BY A COMPETENTLY QUALIFIED ENGINEER.

RECOMMENDED SERVICE INTERVALS

C2 Kerosene Annually

Before carrying out a service it is recommended that the following is checked:

A). Smoke

B). CO2

C). The flue gas temperature

D). Oil pressure

E). Ensure flue is unrestricted & operating properly

At the same time check for oil and combustion leaks. Advance to service **ONLY** after ensuring that both electric and oil supply to boiler is safely isolated

THE OIL TANK

Draw off any accumulated water and sludge from the tank by opening the drain cock. Turn off the oil supply and remove the filter bowl, then wash the element clean with kerosene. Steel Tank Only

THE BOILER

Remove combustion access door for access to baffles and to clean heat exchanger.

Check insulation sealing and its silver foil lining in combustion access door - replacing when necessary. When refitting this door be careful not to damage the foil and insulation by over tightening.

THE BURNER

Check performance of oil-nozzle and replace as necessary.

Ensure correct specification replacement nozzle is used.

Check all oil filters and replace as necessary.

Remove burner and clean blast tube and ensure that airways are clear.

Ensure electrodes are clean, dry, not broken and are set as per burner specifications.

Clean fan and photocell.

Once again check flexible oil lines and connections for damage or leaks, replace as necessary.

Combustion Check

Carry out combustion analysis and ensure that boiler is performing to specification outlined in manual. Flue conditions may cause deviation from these figures.

Always keep careful record of flue gas analysis results including any verbal and written advice to customer (householder). Always check carefully for restricted or blocked flue. If possible record CO levels and advise customer of need to keep boiler room well ventilated.

SERVICING RECORD - PAGE 42

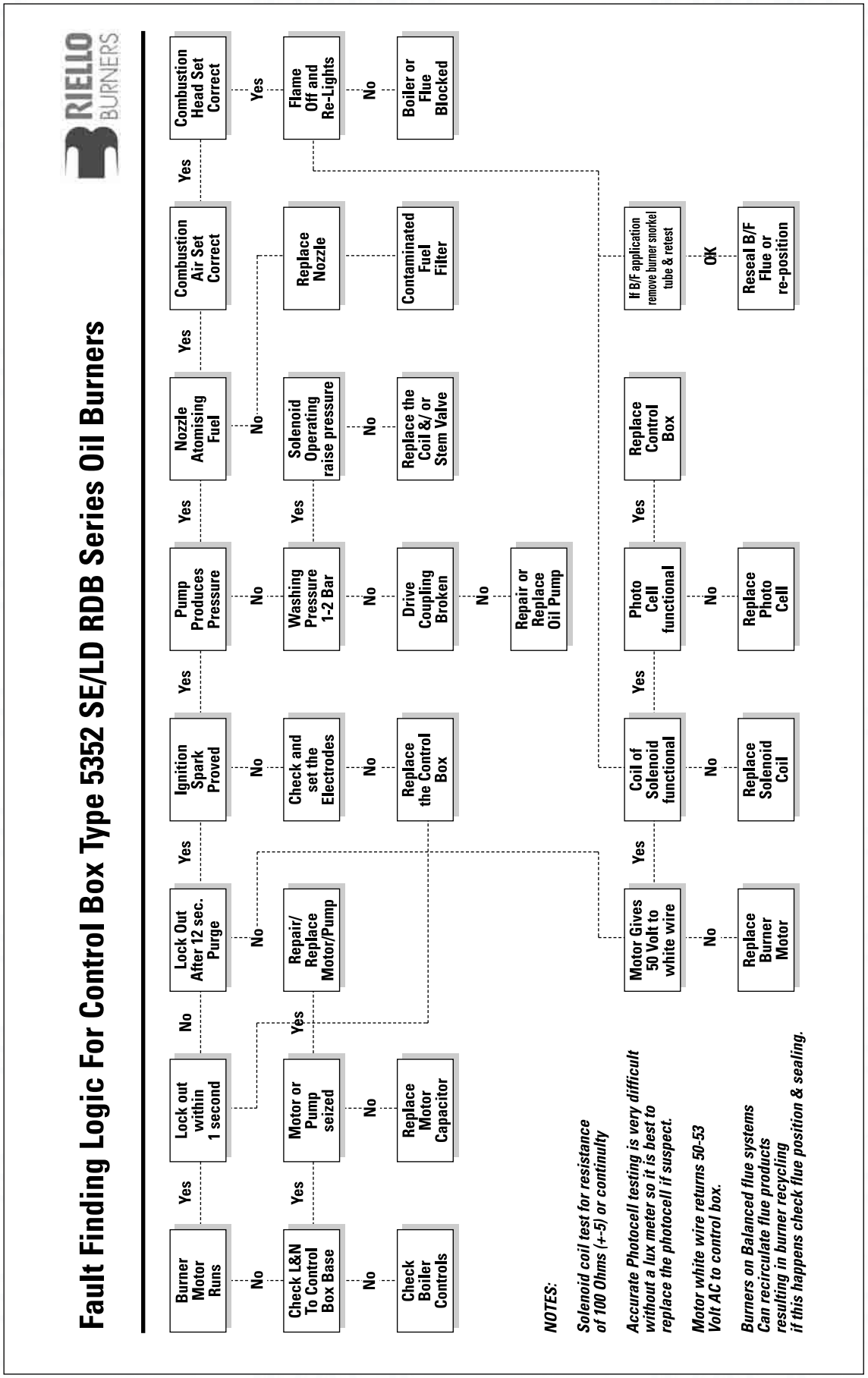
Fault Finding Logic For Control Box Type 5352 SE/LD RDB Series Oil Burners
RIELLO BURNERS
Burner Motor Runs
Yes
No
Check L&N To Control Box Base
Yes
No
Check Boiler Controls
Lock out within 1 second
No
Yes
Motor or Pump seized
No
Replace Motor Capacitor
Lock Out After 12 sec. Purge
Yes
No
Repair/ Replace Motor/Pump
Ignition Spark Proved
Yes
No
Check and set the Electrodes
No
Replace the Control Box
Pump Produces Pressure
Yes
No
Washing Pressure 1-2 Bar
Yes
No
Drive Coupling Broken
No
Repair or Replace Oil Pump
Nozzle Atomising Fuel
Yes
No
Solenoid Operating raise pressure
No
Replace the Coil &/ or Stem Valve
Replace Nozzle
Contaminated Fuel Filter
Combustion Air Set Correct
Yes
Combustion Head Set Correct
Yes
Flame Off and Re-Lights
No
Boiler or Flue Blocked
Motor Gives 50 Volt to white wire
Yes
No
Replace Burner Motor
Coil of Solenoid functional
Yes
No
Replace Solenoid Coil
Photo Cell functional
Yes
No
Replace Photo Cell
Replace Control Box
If B/F application remove burner snorkel tube & retest
OK
Reseal B/F Flue or re-position
NOTES:
Solenoid coil test for resistance of 100 Ohms (+-5) or continuity
Accurate Photocell testing is very difficult without a lux meter so it is best to replace the photocell if suspect.
Motor white wire returns 50-53 Volt AC to control box.
Burners on Balanced flue systems Can recirculate flue products resulting in burner recycling if this happens check flue position & sealing.

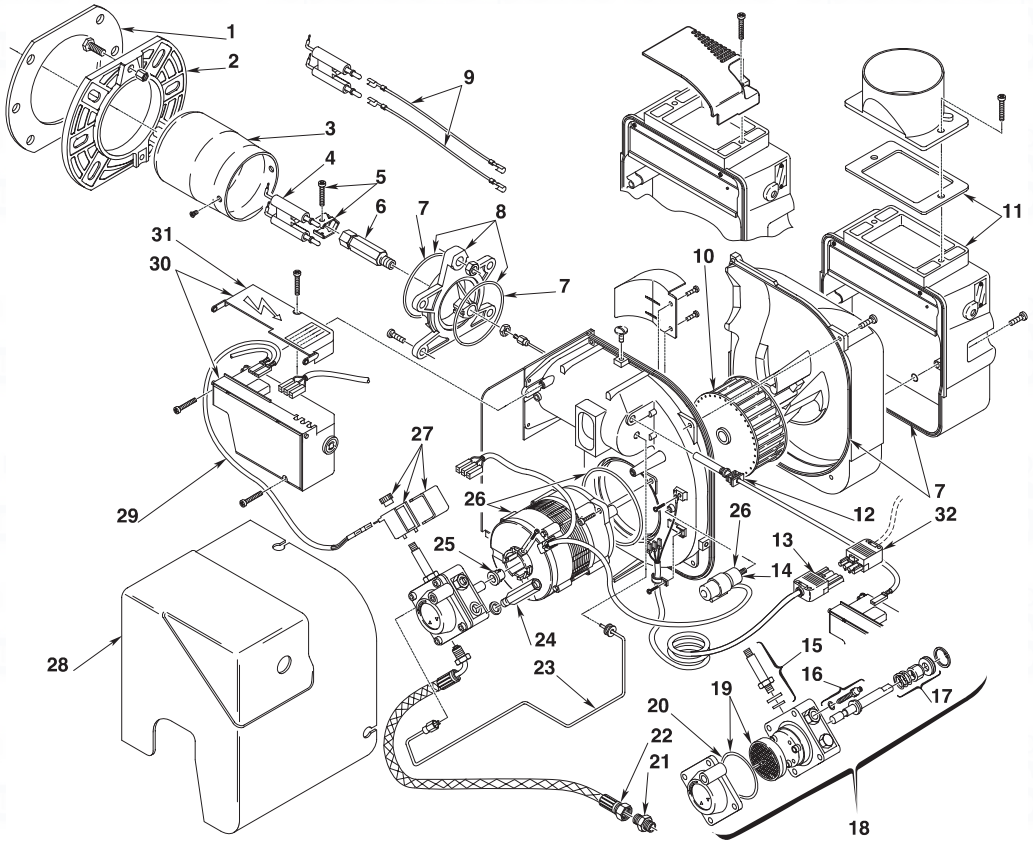

Item No	3514105	3514305	3514306	Code Spare Parts	Description
1	•	•	•	3005787	Gasket
2	•	•	•	3006384	Flange
3		•	•	3002447	Cup-Shaped Head
3				3002533	Cup-Shaped Head
3	•			3002507	Cup-Shaped Head
3				3008768	Cup-Shaped Head
4	•	•	•	3007513	Electrode Assembly
5	•	•	•	3006552	Electrode Bracket
6	•	•	•	3008642	Nozzle Holder
7	•	•	•	3008878	Kit Seals
8	•	•	•	3008643	Collar
9	•	•	•	3008794	High Voltage Lead
10	•	•	•	3005788	Fan
11	•	•	•	3008647	Air Damper Assembly
11				3008839	Air Damper Assembly
12	•	•	•	3008646	P.E. Cell
13	•	•	•	3002657	4 Pole Socket
14	•	•	•	3002837	Capacitor 4,5uf
15	•	•	•	3007582	Needle Valve
16	•	•	•	3008651	Regulator
17	•	•	•	3000439	Pump Seal
18	•	•	•	3008654	Pump
19	•	•	•	3008653	Filter - O - Ring
20	•	•	•	3007162	O - Ring
21	•	•	•	3003602	Connector
22				3007621	Flexible Oil Line
22	•	•	•	3005720	Flexible Oil Line
23	•	•	•	3008644	Tube
24	•	•	•	3008876	Pressure Gauge
25	•	•	•	3000443	Joint
26	•	•	•	3002836	Motor + Capacitor
27	•	•	•	3008648	Coil
28	•	•	•	3008879	Cover
29	•	•	•	3008851	Lead Coil
30	•	•	•	3008652	Control Box 535RSE/LD
31	•	•	•	3008649	Protection
32	•	•	•	3007418	4 Pin Plug

When Ordering Please Quote Part Description and Burner Type

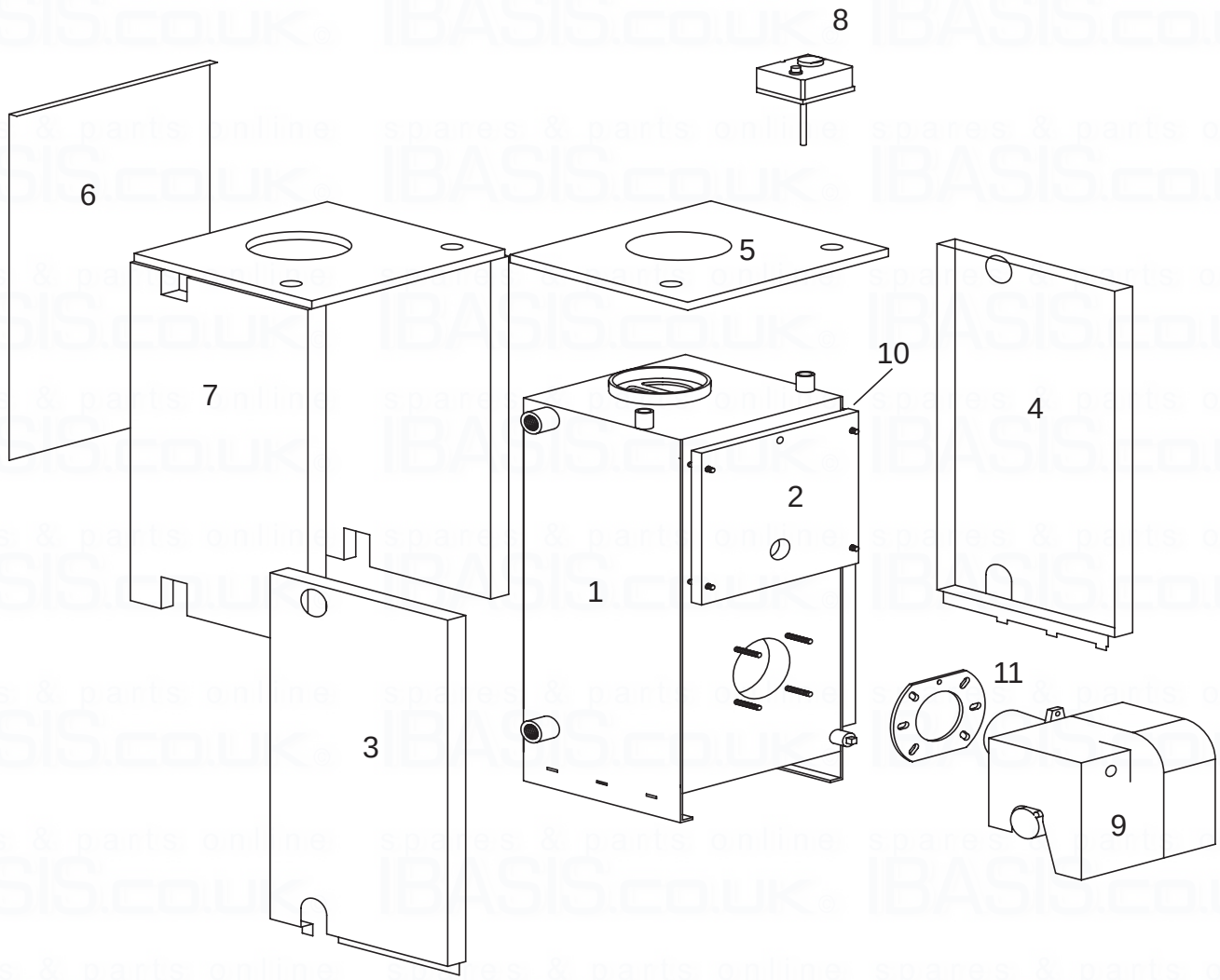

ITEM	COMPONENT	Qty	POPULAR / BOILERHOUSE 'S' MODELS & PART NUMBERS					
			50-70-90	90-120	120-150	150-200	200-250	250-310
1	Boiler Shell Assembly	1	310058	310059	310193	310197	310199	310202
2	Baffle Door	1	210016	210066	210083	210100	210122	210139
3	Popular Sides (Set)	1	210022	210022	210149	210152	210157	210161
4	Popular Sides (Set)	1	210022	210022	210149	210152	210157	210161
5	Popular Top	1	210020	210053	210148	210153	210156	210160
6	Popular Back	1	210021	210054	210150	210154	210158	210162
7	Boiler Insulation Wrap	1	110019	110052	110151	110155	110159	110163
8	Stat	1	410204	410204	410204	410204	410204	410204
9	Burner	1	410208	410208	410209	410210	410211	410212
10	Ceraboard Door	1	110017	110051	110168	110170	110172	110174
11	Flange	1	see page 33	see page 33	see page 33	see page 33	see page 33	see page 33

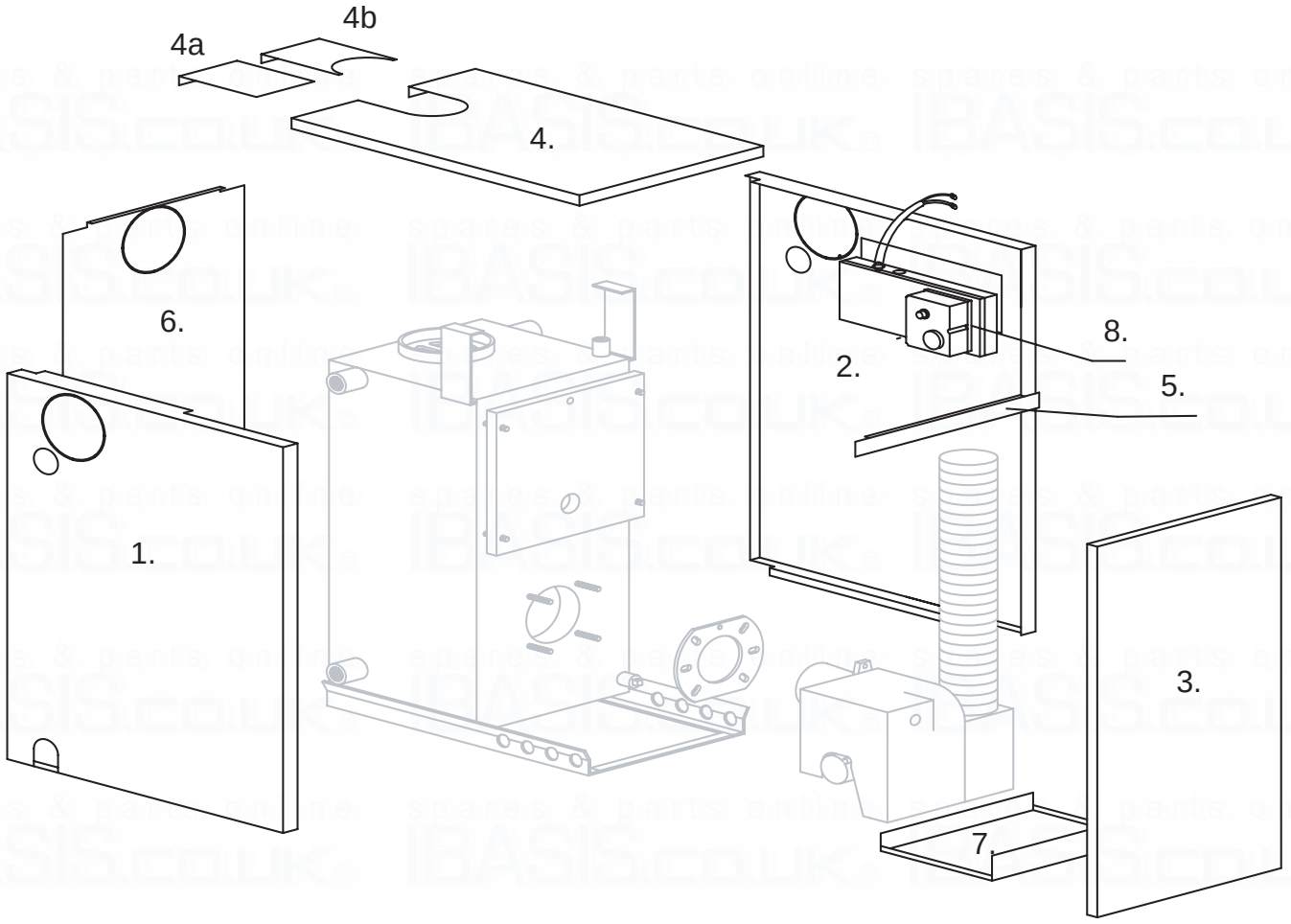

ITEM	COMPONENT	Qty	KITCHEN 'S' MODELS & PART NUMBERS 50-70-90	90-120	120-150	150-200	200-250	250-310
1	Side Panel L H Side	1	FS90- LH-L-01	FS125- LH-L-01	FS150- LH-L-01	FS150- LH-L-01	FS200- LH-L-01	FS310- LH-L-01
2	Side Panel R H Side	1	FS90-RH-L-02	FS125-RH-L-02	FS150-RH-L-02	FS150-RH-L-02	FS200-RH-L-02	FS310-RH-L-02
3	Front Panel	1	FS90-FP-L-05	FS125-FP-L-05	FS150-FP-L-05	FS150-FP-L-05	FS200-FP-L-05	FS310-FP-L-05
4	Top Panel	1	FS90-TP-L-03	FS125-TP-L-03	FS150-TP-L-03	FS150-TP-L-03	FS200-TP-L-03	FS310-TP-L-03
4a	Flue Trim Plate	1	FS90-FTP-L-03	FS125-FTP-L-03	FS150-FTP-L-03	FS150-FTP-L-03	FS200-FTP-L-03	FS310-FTP-L-03
4b	Conventional Trim Plate	1	FS90-GP-L-03	FS125-CTGP-L-03	FS150-CTGP-L-03	FS150-CTGP-L-03	FS200-CTGP-L-03	FS310-CTGP-L-03
5	Light Strip	1	FS90-LS-L-46	FS125-LS-L-46	FS150-LS-L-46	FS150-LS-L-46	FS200-LS-L-46	FS310-LS-L-46
6	Back Panel	1	FS90-BP-L-04	FS125-BP-L-04	FS150-BP-L-04	FS150-BP-L-04	FS200-BP-L-04	FS310-BP-L-04
7	Drip Tray	1	FS90-L-31	FS125-L-31	FS150-L-31	FS150-L-31	FS200-L-31	FS310-L-31
8	Dual Stat	1	IM TLSC 542764	IM TLSC 542764	IM TLSC 542764	IM TLSC 542764	IM TLSC 542764	IM TLSC 542764
	Boiler	1	see page 34	see page 34	see page 34	see page 34	see page 34	see page 34

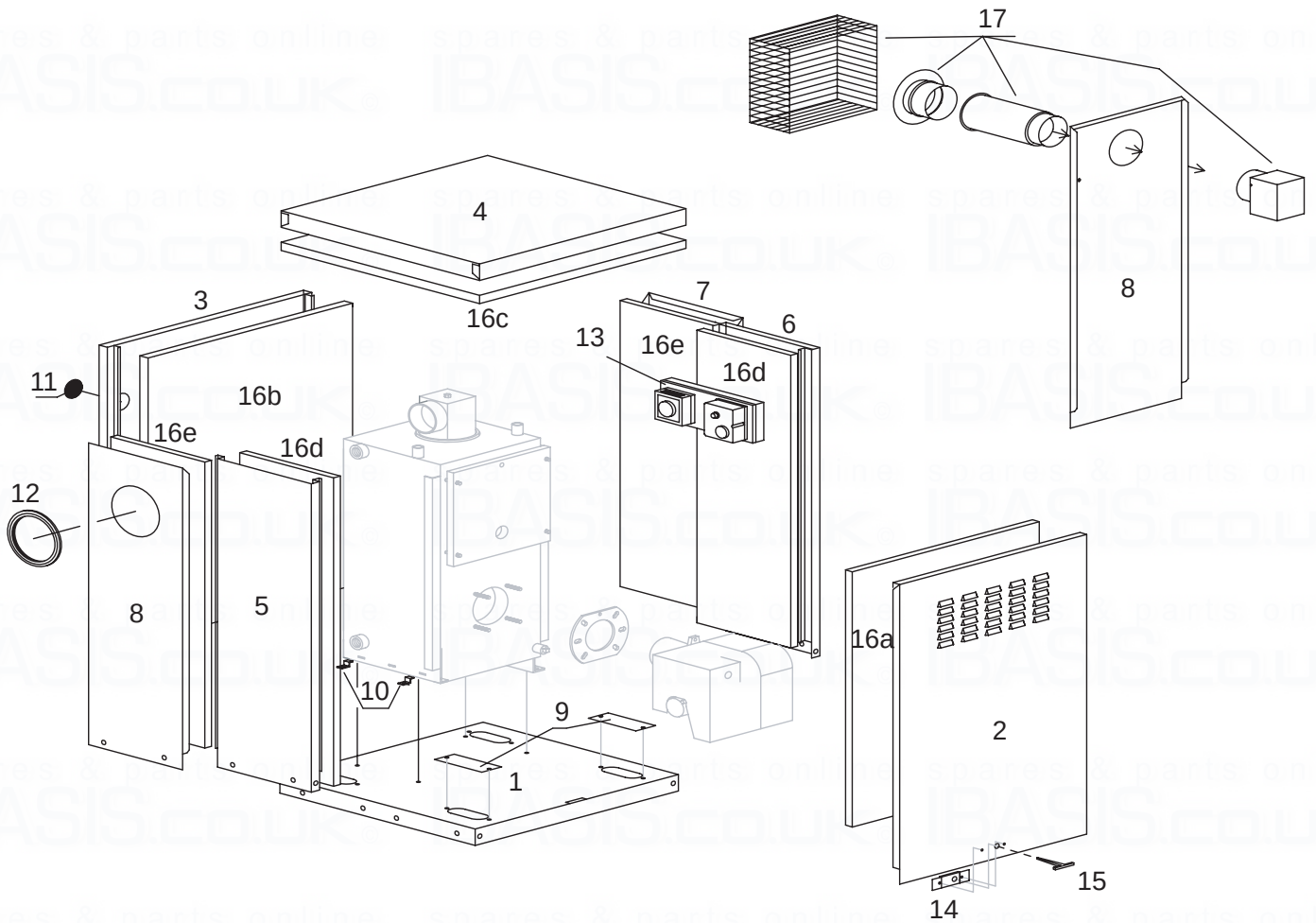

ITEM	COMPONENT	Qty	HEAT PAC 'S' MODELS & PART NUMBERS 70-90	90-120	120-150
1	Base	1	210322	210353	210366
2	Front	1	210328	210356	210379
3	Back	1	210323	210354	210367
4	Top	1	210324	210355	210368
5	Fixed Left Side	1	210325	210325	210376
6	Fixed Right Side	1	210326	210326	210377
7	Removable Left Side	1	210422	210422	210433
8	Removable Right Side	1	210423	210423	210434
9	Base Blanks	4	210256	210256	210369
10	Boiler Securing Bracket	2	210261	210261	210370
11	45mm Body Plug	6	110277	110277	110277
12	Flue Outlet Rubber Seal	1	110721	110721	110721
13	Stat Box Assembly				
	(a) Without Frost Stat.	1	310348	310348	310348
	(b) With Frost Stat.	1	310453	310453	310453
14	Lock	1	110266	110266	110266
15	Key	1	110267	110267	110267
16	Panel Insulation Kit	1	110291	110358	110374
	16a Front Insulation	1	110291	110358	110374
	16b Back Insulation	1	110291	110358	110374
	16c Top Insulation	1	110291	110358	110374
	16d Fixed Side Insulation	2	110291	110358	110374
	16e Flue Side Insulation	2	110291	110358	110374
17	Flue Kit	1	410286	410286	110436
	Boiler	1	see page 34	see page 34	see page 34

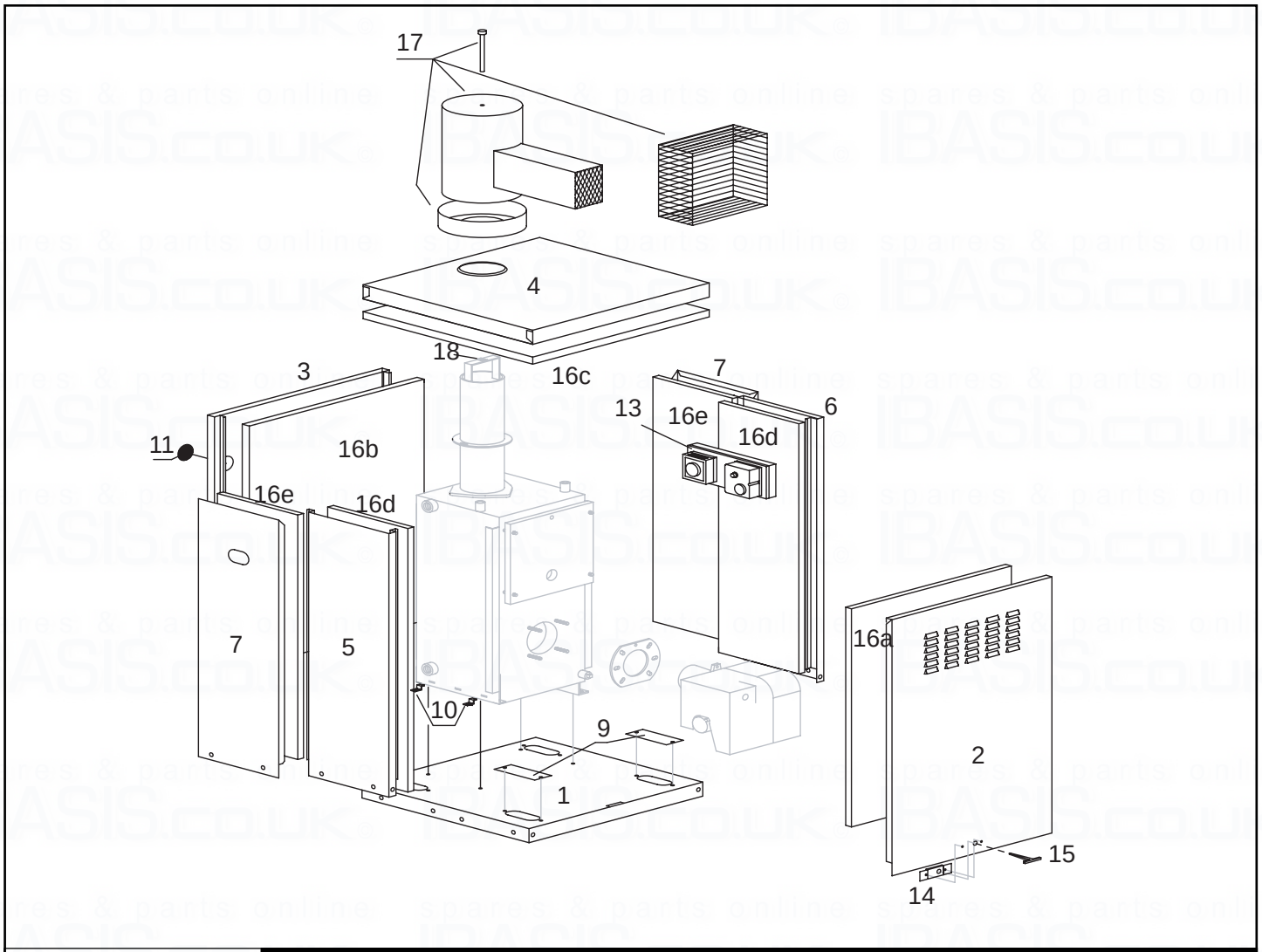

			HEAT PAC 'S' TURRET MODELS & PART NUMBERS					
ITEM	COMPONENT	Qty	50-70-90	90-120	120-150	150-200	200-250	250-310
1	Base	1	210322	210353	210366	210383	210383	210409
2	Front	1	210328	210356	210379	210385	210385	210411
3	Back	1	210323	210354	210367	210384	210384	210410
4	Top	1	210324	210355	210368	210386	210392	210412
5	Fixed Left Side	1	210325	210325	210376	210389	210389	210413
6	Fixed Right Side	1	210326	210326	210377	210390	210390	210414
7	Removable Side Blank	1	210327	210327	210378	210391	210391	210415
9	Base Blanks	4	210256	210256	210369	210369	210369	210369
10	Boiler Securing Bracket	2	210261	210261	210370	210370	210370	210370
11	45mm Body Plug	6	110277	110277	110277	110277	110277	110277
12	Flue Outlet Rubber Seal	1	110721	110721	110721	110721	110721	110721
13	Stat Box Assembly							
	(a) Without Frost Stat.	1	310348	310348	310348	310348	310348	310348
	(b) With Frost Stat.	1	310453	310453	310453	310453	310453	310453
14	Lock	1	110266	110266	110266	110266	110266	110266
15	Key	1	110267	110267	110267	110267	110267	110267
16	Panel Insulation Kit	1	110291	110358	110374	110400	110400	110400
	16a Front Insulation	1	110291	110358	110374	110400	110400	110400
	16b Back Insulation	1	110291	110358	110374	110400	110400	110400
	16c Top Insulation	1	110291	110358	110374	110400	110400	110400
	16d Fixed Side Insulation	2	110291	110358	110374	110400	110400	110400
	16e Flue Side Insulation	2	410331	410331	410331	110380	110380	110400
17	Flue Kit	1	410286	410286	110436	11380	11380	110399
	Boiler	1	see page 34	see page 34	see page 34	see page 34	see page 34	see page 34

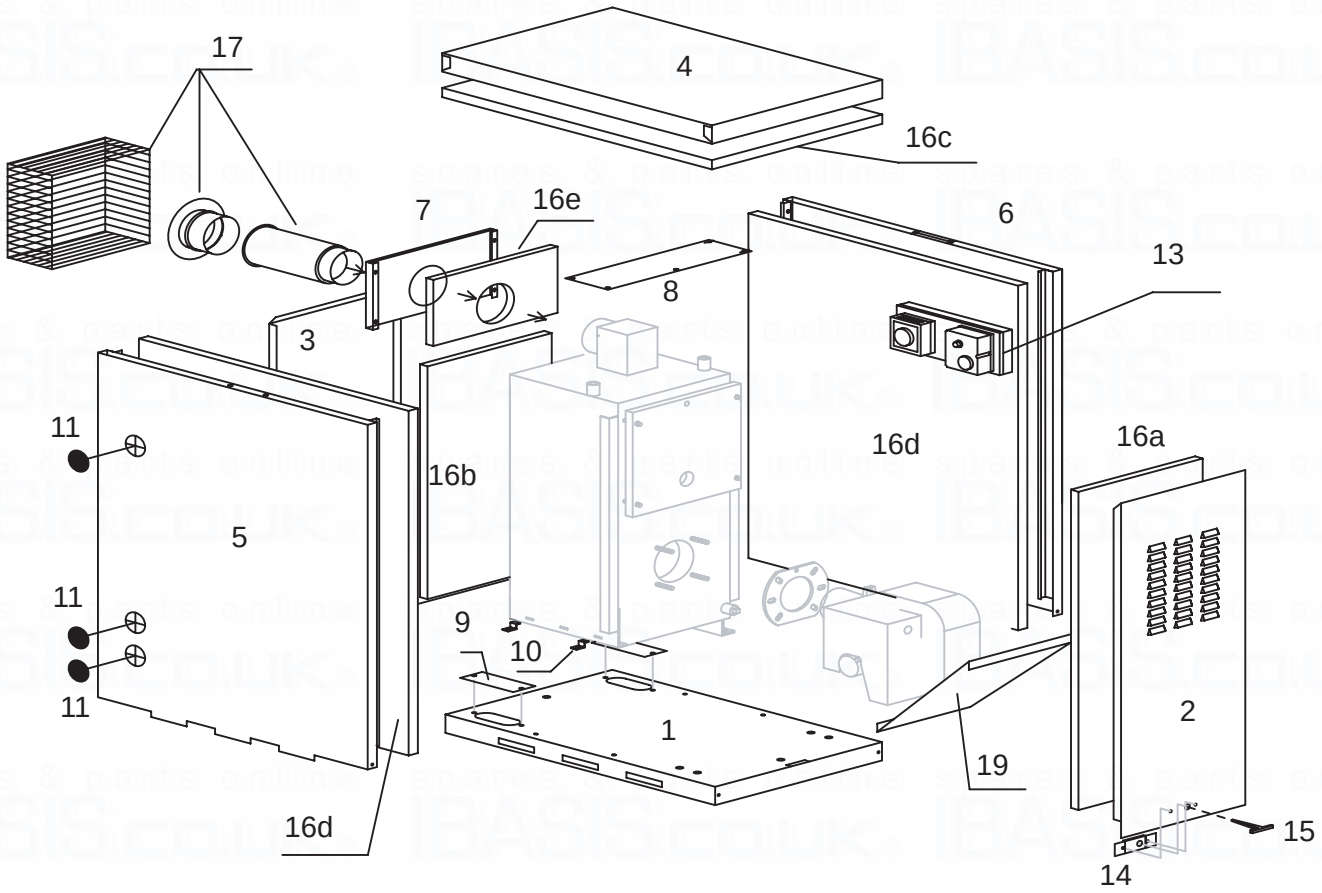

SLIMLINE HEAT PAC MODELS & PART NUMBERS				
ITEM	COMPONENT	Qty	50-70-90	90-120
1	Base	1	210255	210299
2	Front	1	210272	210298
3	Back	1	210275	210300
4	Top	1	210289	210297
5	Left Side	1	210274	210274
6	Right Side	1	210273	210273
7	Back Flue Outlet	1	210276	210276
8	Panel Support Bracket	1	210250	210250
9	Base Blanks	4	210256	210256
10	Boiler Securing Bracket	2	210261	210261
11	45mm Body Plug	6	110277	110277
13	Stat Box Assembly			
	(a) Without Frost Stat.	1	310348	310348
	(b) With Frost Stat.	1	310453	310453
14	Lock	1	110266	110266
15	Key	1	110267	110267
16	Panel Insulation Kit	1	110305	110305
	16a Front Insulation	1	110305	110305
	16b Back Insulation	1	110305	110305
	16c Top Insulation	1	110305	110305
	16d Side Insulation	2	110305	110305
	16e Flue Outlet Insulation	1	110305	110305
17	Flue Kit	1	410286	410286
19	Splash Gauard	1	210294	210294
	Boiler	1	see page 34	see page 34

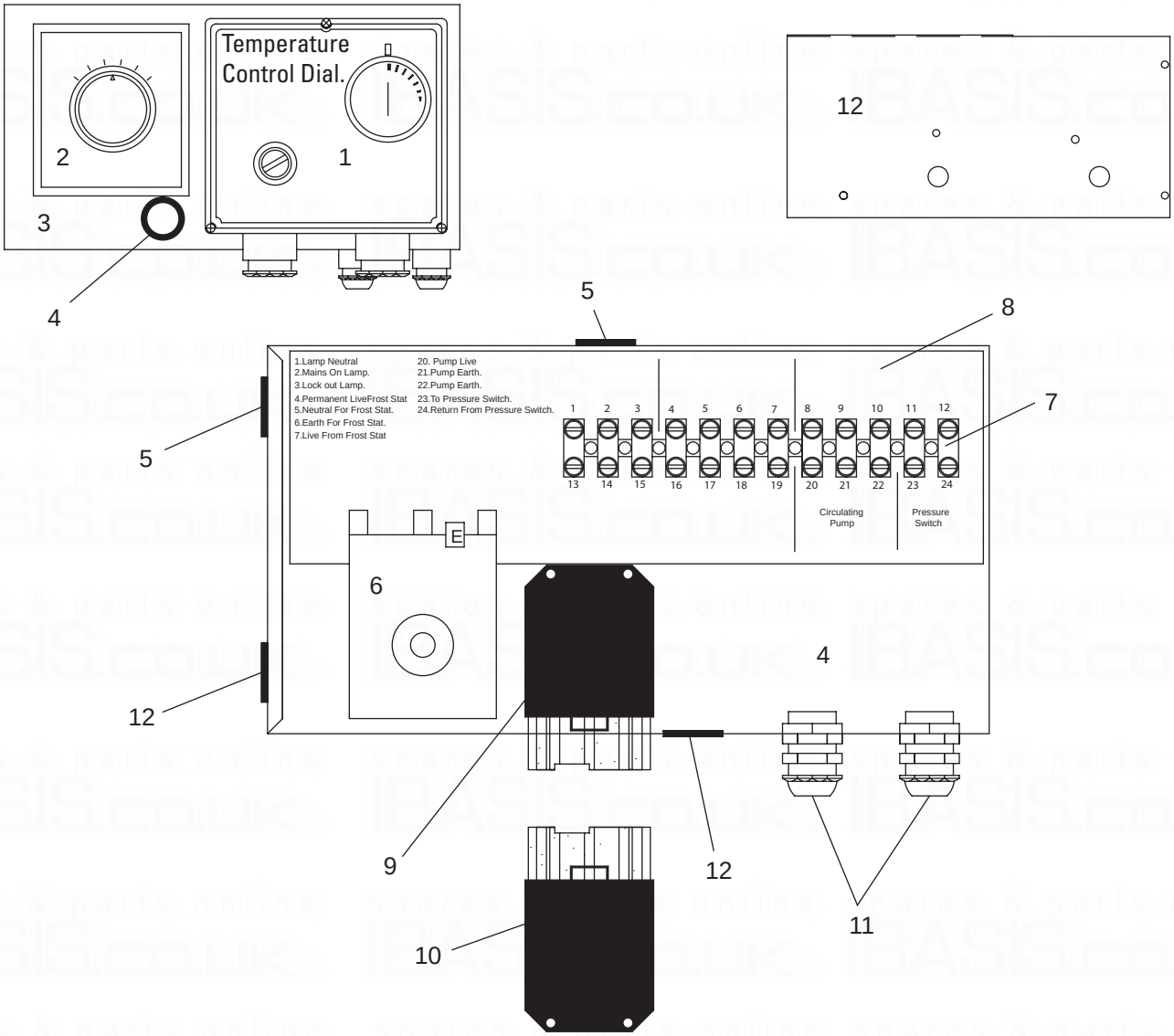

CONTROL UNIT MODELS & PART NUMBERS				
ITEM	COMPONENT	Qty	Heat Pac	Kitchen
1	Dual Stat	1	TLSC542788	TLSC542788
2	Frost Stat	1	TLM2257	TLM2257
3	Control Box Cover	1	119183	119183
4	Control Box	1	119184	119184
5	Control Box Mounting	1	119185	119185
6	Over Heat Thermostat	1	FC03154	FC03154
7	Strip Connector	1	FC03144	FC03144
8	Label	1	W-1001	W-1001
9	Socket [Wieland]	1	FC031542	FC031542
10	Plug [Wieland]	2	FC03143	FC03143
11	Open Grommet	3	MO10281	MO10281
12	Blank Grommet	2	MO11321	MO11321

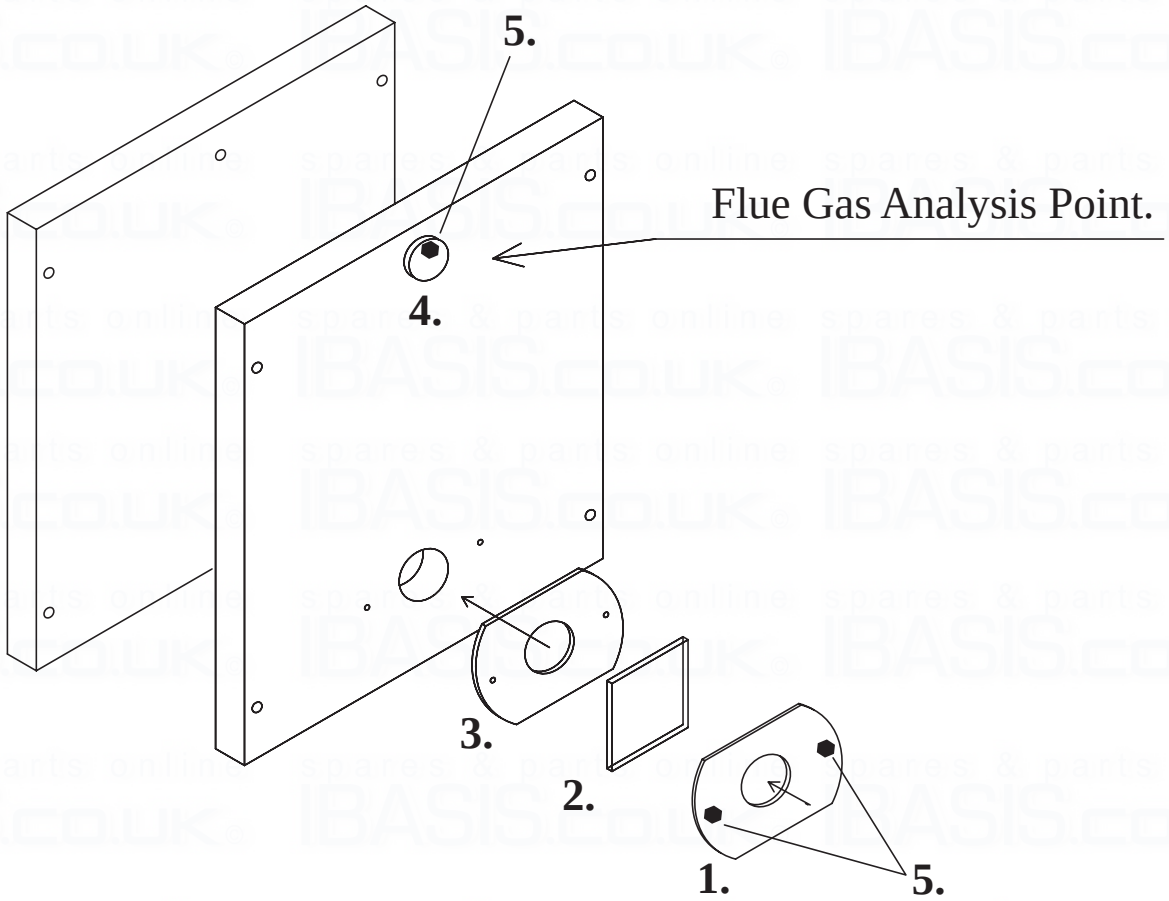

VIEW GLASS ASSEMBLY

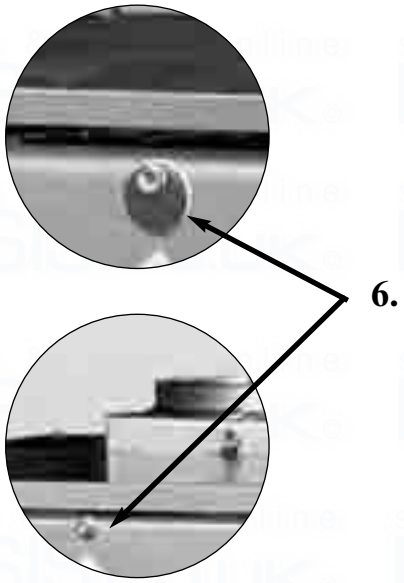

VIEW GLASS PART NUMBERS

ITEM	COMPONENT	Qty	Part No.
1	View Glass Galv Bracket	1	210028
2	Viewing Glass	1	210027
3	Eye Spy Inspection Gasket & Blank	1	110029
4	Red Blank Analysis Point (50-120btu's)	1	210031
5	M6 x 16 Hex Flange	3	110030
6	Socket Cap Screw Analysis Point (150-310btu's)	1	110147

Baffles for 50/70 and 70/90 Boiler Models

R 50-70

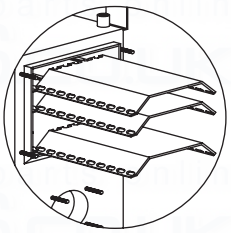

R 70-90

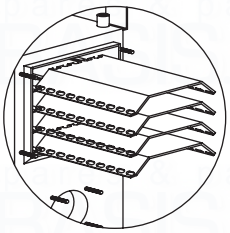

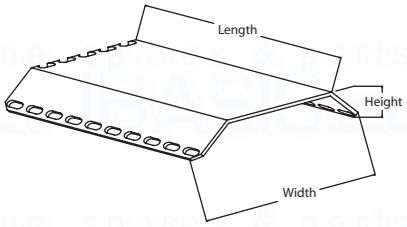

BAFFLE PART NO:

R 50-70-90:	210015

Baffles for 90/120 Boiler Models

(8b).

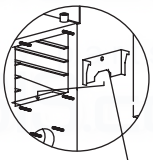

Drop In Baffle

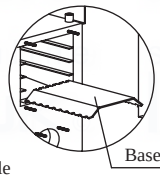

Base Baffle

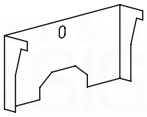

Drop In Baffle

(8).

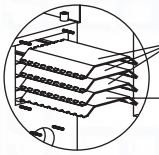

Baffle 1

Base Baffle

(8a).

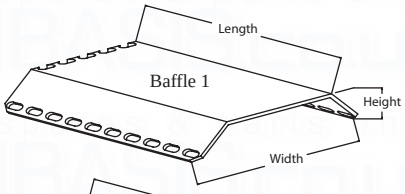

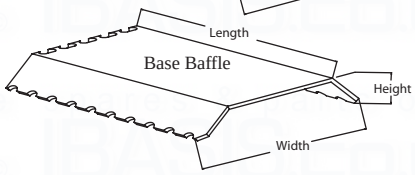

BAFFLE PART NO:

Baffle 1:	210060
Base Baffle:	210050
Drop In Baffle:	210049

Baffles for 120/150 and 150/200 Boiler Models

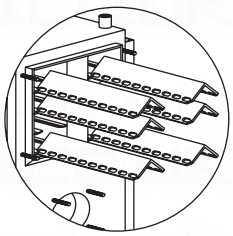

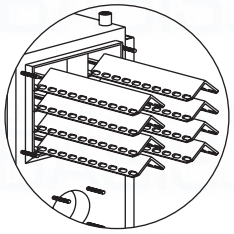

Remove Second Row Of Baffles
To Lower Setup

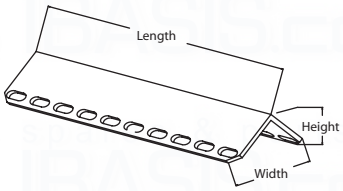

BAFFLE PART NO:

120-150:	210082
150-200:	210090

Baffles for 200/250 and 250/310 Boiler Models

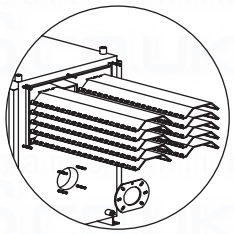

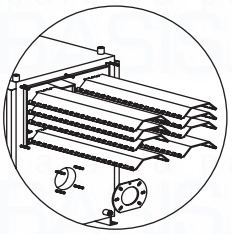

Remove Second Row Of Baffles
To Lower Setup

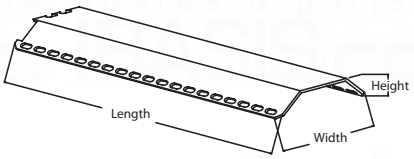

BAFFLE PART NO:

200-250:	210121
250-310:	210138

• • • • PATENTED BAFFLE DESIGN • • • •

Service Report

NB All Information recorded hereunder should also be included in Engineers own filed service reports. It is recommended that the boiler be serviced, ***at least once a year***, and the details recorded below. Engineer should advise householder.

	1ST SERVICE	2ND SERVICE	3RD SERVICE	4TH SERVICE
Burner Model	❒	❒	❒	❒ .....
Oil Type	❒	❒	❒	❒ .....
Nozzle Type	❒	❒	❒	❒ .....
Nozzle Size	❒	❒	❒	❒ .....
Nozzle Angle	❒	❒	❒	❒ .....
Pump Pressure	❒	❒	❒	❒ .....
Air	❒	❒	❒	❒ .....
Smoke Reading	❒	❒	❒	❒ .....
Flue Draft "W.g.	❒	❒	❒	❒ .....
CO_2%	❒	❒	❒	❒ .....
F.G.T. °C	❒	❒	❒	❒ .....
Flue Seal	❒	❒	❒	❒ .....
Gaskets	❒	❒	❒	❒ .....
Fire Valve Location	❒	❒	❒	❒ .....
CHECK				
Water	❒	❒	❒	❒ .....
All Connections	❒	❒	❒	❒ .....
Baffles	❒	❒	❒	❒ .....
Baffles in position and correct	❒	❒	❒	❒ .....
CHECK				
D.M. Hot Water	❒	❒	❒	❒ .....
Central Heating	❒	❒	❒	❒ .....
Flow Switch	❒	❒	❒	❒ .....
Power Supply	❒	❒	❒	❒ .....
Date:	.....	.....	.....	.....
Service Engineer:	.....	.....	.....	.....
Tel. No:	.....	.....	.....	.....
Signature:	.....	.....	.....	.....
Comments:	.....	.....	.....	.....
	.....	.....	.....	.....
	.....	.....	.....	.....
	.....	.....	.....	.....

This record should be carefully completed, remain in this manual and be left with householder. A copy should be kept on file by engineer

INSTALLER/COMMISSIONING ENGINEER (In block capitals)

NAME .....

ADDRESS .....

.....

POSTCODE ..... TEL .....

COMMISSIONING CHECK DETAILS

BOILER MODEL ..... OUTPUT ..... SERIAL NUMBER .....

Burner Model	❒	.....	Gaskets	❒	.....
Oil Type	❒	.....	Fire Valve Location	❒	.....
Nozzle Type	❒	.....			
Nozzle Size	❒	.....	**CHECK**		
Nozzle Angle	❒	.....	Water	❒	.....
Pump Pressure	❒	.....	All Connections	❒	.....
Air	❒	.....	Baffles	❒	.....
Smoke Reading	❒	.....	Baffles in position and correct	❒	.....
Flue Draft "W.g.	❒	.....	**CHECK**		
CO_2%	❒	.....	D.M. Hot Water	❒	.....
F.G.T. ˚C	❒	.....	Central Heating	❒	.....
Flue Seal	❒	.....	Flow Switch	❒	.....
			Power Supply	❒	.....

Notes: .....

.....

.....

.....

.....

DATE ..... NAME ..... ADDRESS .....

COMMISSIONING COMPANY .....

.....

SIGNATURE ..... POSTCODE ..... TEL .....

15 NOTES

spares & parts online IBASIS.CO.UK

15 NOTES

spares & parts online IBASIS.CO.UK

15 NOTES

spares & parts online IBASIS.CO.UK

OFCERT - Floor Standing Appliances - Standard

Standard Boilers			OFCERT Licence No.
Firebird Popular	50/70	Boilerhouse	0011020533
Firebird Popular	70/90	Boilerhouse	0011020529
Firebird Popular	90/120	Boilerhouse	0011030515
Firebird Popular	120/150	Boilerhouse	0011020515
Firebird Popular	150/200	Boilerhouse	0011020509
Firebird Popular	200/250	Boilerhouse	0011020501
Firebird Popular	250/310	Boilerhouse	0011020536
Firebird Boilerhouse S	50/70	Boilerhouse	0011020534
Firebird Boilerhouse S	70/90	Boilerhouse	0011020530
Firebird Boilerhouse S	90/120	Boilerhouse	0011030516
Firebird Boilerhouse S	120/150	Boilerhouse	0011020516
Firebird Boilerhouse S	150/200	Boilerhouse	0011020510
Firebird Boilerhouse S	200/250	Boilerhouse	0011020502
Firebird Boilerhouse S	250/310	Boilerhouse	0011020537
Firebird Roomsealed Popular	50/90	Hideaway	0011020525
Firebird Roomsealed Popular	90/120	Hideaway	0011030517
Firebird Roomsealed Popular	120/150	Hideaway	0011020517
Firebird Roomsealed Popular	150/200	Hideaway	0011020511
Firebird Roomsealed Popular	200/250	Hideaway	0011020504
Firebird Roomsealed Popular	250/310	Hideaway	0011020538
Firebird S Kitchen	50/70	White Cased/Indoor	
Firebird S Kitchen	70/90	White Cased/Indoor	
Firebird S Kitchen	90/120	White Cased/Indoor	0011030518
Firebird S Kitchen	120/150	White Cased/Indoor	
Firebird S Kitchen	150/200	White Cased/Indoor	
Firebird S Kitchen	200/250	White Cased/Indoor	0011020503
Firebird S Kitchen	250/310	White Cased/Indoor	0011020542
Roomsealed Super Q	50/90	Balanced Flue White Indoor	0011020527
Roomsealed Super Q	90/120	Balanced Flue White Indoor	
Roomsealed Super Q	120/150	Balanced Flue White Indoor	0011020520
Roomsealed Super Q	150/200	Balanced Flue White Indoor	0011020513
Roomsealed Super Q	200/250	Balanced Flue White Indoor	0011020507
Roomsealed Super Q	250/310	Balanced Flue White Indoor	0011020540
Heatpac 90	50/90	Outdoor - Turret Flue	0011030504
Heatpac 120	90/120	Outdoor - Turret Flue	0011020501
Heatpac 150	120/150	Outdoor - Turret Flue	0011020521
Heatpac 200	150/200	Outdoor - Turret Flue	0011020514
Heatpac 250	200/250	Outdoor - Turret Flue	0011020508
Heatpac 310	250/310	Outdoor - Turret Flue	0011020541
Heatpac 70 Slimline	50/70	Outdoor - Side Flue	0011030502
Heatpac 90 Slimline	70/90	Outdoor - Side Flue	0011030503
Heatpac 90 S	50/90	Outdoor - Side Flue	0011020528
Heatpac 120 S	90/120	Outdoor - Side Flue	0011030505
Heatpac 90	70/90	Outdoor - Turret Flue	0011030514

ATTENTION ALL OIL FIRED BOILERS INSTALLERS

It is the responsibility of INSTALLER / HOUSEHOLDER to ensure that the boiler is PROPERLY COMMISSIONED by a competent or OFTEC registered engineer.

Failure to have the appliance commissioned and warranty card completed and returned may invalidate the warranty.

It is not the responsibility of the Manufacture or the Supplier if a boiler will not operate properly due to non commissioning of the appliance.

Please Note: **Should a site inspection be required from the manufacturer's engineer, a call-out fee will be charged if the fault is a result of non commissioning.**

FIREBIRD BOILERS Guarantee

1. Firebird hereby guarantees the following (The Guarantees)

a. The Boiler Shell will be free from defective parts or workmanship for a period of 5 years from the date of installation.

b. Burner, controls and flue kits (supplied by Firebird) will be free from defective parts or workmanship for a period of 2 years from the date of installation. (With the exception of burner nozzles, which should be replaced at the recommended service intervals.)

2. Guarantees are subject to the following conditions:

a. All claims under the guarantees must be within the above stated time limits.

b. The boiler must be commissioned by qualified persons and as set out in the Installation Manual, using correct test equipment.

c. Maintenance should be carried out at the intervals stated in the Installation Manual.

d. Installation of the boiler must be in accordance with (a) Installation Manual, (b) all relevant standards and codes of practice.

e. Firebird can accept no liability in respect of any defect arising from incorrect installation, negligence, fair wear and tear, misuse, alteration or repair by unqualified persons.

f. Firebird will not accept any liability in respect of any defect occurring in the heat exchanger due to limescale build-up and or low return water temperature.

g. The guarantees extend to reasonable labour costs EXCEPT under clause 1a where any valid claim made after 3 years will not include labour costs.

h. Firebird's prior authorisation must be obtained before examination or repair of the boiler takes place.

i. Firebird will examine all claims made under the guarantees and for any claims that are deemed invalid, the costs incurred will be borne by the owner.

j. That the appliance was used only for normal domestic central heating purposes.

3. Any defective part removed under any or all of the guarantees **MUST** be returned to Firebird.

STATUTORY RIGHTS OF THE OWNER ARE NOT AFFECTED BY THIS GUARANTEE

Firebird Boilers Guarantee Registration

IMPORTANT

Please ensure that the appliance is commissioned and the installer or commissioning engineer fills in the commissioning check details below, which should then be promptly returned to nearest Firebird address.

FIREBIRD UK
EAST CENTRAL HOUSE,1 EASTWAY, LEE MILL,
NR. IVYBRIDGE, DEVON, ENGLAND. PL21 9ES
TEL: 01 752 691177
FAX: 01 752 691131

FIREBIRD BOILERS
BAILE MHIC ÍRE,
CO. CHORCAÍ.
TEL: 026 45253
FAX: 026 45309

FIREBIRD PRODUCTS
SHEAN, FORKHILL,
NEWRY, N. IRELAND. BT35 9SY
TEL: 028 30888330
FAX: 028 30889096

TEAR OFF HERE & RETURN TO THE APPROPRIATE ADDRESS

HOUSEHOLDER (In block capitals)

NAME .....

ADDRESS .....

.....

POSTCODE ..... TEL .....

INSTALLER (In block capitals)

NAME .....

ADDRESS .....

.....

POSTCODE ..... TEL .....

COMMISSIONING CHECK DETAILS

BOILER MODEL .....

Burner Model	❒	.....
Oil Type	❒	.....
Nozzle Type	❒	.....
Nozzle Size	❒	.....
Nozzle Angle	❒	.....
Pump Pressure	❒	.....
Air	❒	.....
Smoke Reading	❒	.....
Flue Draft in W.C.	❒	.....

OUTPUT .....

CO_2%	❒	.....
Condensed Trap Primed	❒	.....
F.G.T. °C	❒	.....
Flue Seal	❒	.....
Gaskets	❒	.....
Fire Valve Location	❒	.....
CHECK		
Water	❒	.....
All Connections	❒	.....

SERIAL NUMBER .....

Baffles	❒	.....
Baffles in position and correct	❒	.....
CHECK		
D.M. Hot Water	❒	.....
Central Heating	❒	.....
Flow Switch	❒	.....
Power Supply	❒	.....

DATE ..... NAME .....

COMMISSIONING COMPANY .....

SIGNATURE .....

ADDRESS .....

.....

POSTCODE ..... TEL .....

For further information on Firebird Products please contact

FIREBIRD UK
East Central House, Central Ave., Lee Mill Ind. Est., Devon PL 21 9 PE.
Tel: [+44] 01 752 691177 Fax: [+44] 01 752 691131

FIREBIRD BOILERS
Baile Mhic Íre, Co. Chorcaí.
Tel: [+353] 026 45253 Fax: [+353] 026 45309

FIREBIRD PRODUCTS
Shean, Forkhill, Newry. BT35 9SY.
Tel: [+44] 028 30888330 Fax: [+44] 028 30889096

Int. Access Codes: Eg. N.I. +44 28 30888330

Revision 2. © 18 5 06

© Copyright applies to all FIREBIRD products. Our policy is one of continual development and we therefore reserve the right to change without prior notice the specification of our products at any time and be without obligation to make similar changes in products previously produced.

Print: 10-11-11