spares & parts online
IBASIS.co.UK©

FIREBIRD

OIL FIRED BOILERS

System Range

INSTALLATION
COMMISSIONING
SERVICING &
USER INSTRUCTIONS

THIS MANUAL MUST REMAIN WITH THE HOUSEHOLDER ON COMPLETION OF INSTALLATION

NSAI
I.S. EN ISO 9002

OIL FIRING TECHNICAL ASSOCIATION FOR THE PETROLEUM INDUSTRY
OFTEC
OIL FIRING EQUIPMENT GROUP MEMBER

CE

CONTENTS

FOREWORD

1. INTRODUCTION - P. 1
Health & Safety
Fuel Spillage
First Aid

2. TECHNICAL SPECIFICATIONS - P. 4
2a Boiler Dimensions
2b Boiler Specifications & Recommendations Etc.
2c Oil Burner Performance Specification
2d & e Riello Oil Burner Specification & Technical Details
2g & i Thermostat Control & Wiring

3. OPERATING INSTRUCTIONS - P. 11
3a Boiler controls
3b Operating procedure
3c Burner lock out

4. INSTALLATION - P. 13
4a Standards & Regulations
4b Positioning Boiler
4c Flue Systems
4d Boiler siting regulations & Standards
4e Ventilation and Combustion Air
1. Conventional Flue
2. Balanced Flue
4.f Domestic Htc. & H.w. Systems electrical supply

5. OIL SUPPLY - P. 20
5a Oil storage tank siting
5b Flexible oil pipe(s)
5c Single pipe system
5d Two pipe systems
5e Tigerloop single pipe systems

6. FLUE SYSTEMS - P. 22
6a Important notice
6b Balanced flue systems
6c Concentric flue systems

7. COMMISSIONING - P. 25
7a Procedures
7b Handing over

8. SERVICING - P. 26
8a Recommended service intervals
8b The oil tank
8c The boiler
8d The Burner

9. FAULT FINDING - P. 27 & 28

SYSTEM PART 2.
Sealed System & Domestic Heating - Page 29 - 34

SYSTEM PART 3.

10. SPARE PARTS - P. 35 - 46
10a Riello RDB burner illustration & parts
10b Riello burner illustration & parts
10c Pluming parts illustration
10d Pluming parts description
10e Boiler parts illustration - System Range 50/70 - 70/90
10f Boiler parts description - System Range 50/70 - 70/90
10g Boiler parts illustration - System Range 90/120 - 120/150
10h Boiler parts description - System Range 90/120 - 120/150
10i Boiler parts illustration - System Heat Pac 70
10j Boiler parts illustration - System Heat Pac 70/90
10k Boiler parts illustration - System Heat Pac 90/120 - 120/150

10. RECORDS & REPORTS - P. 47 - 49
Commissioning record Page 47
Service reports Page 48 & 49

FIREBIRD

FOREWORD

This instruction manual is produced for the reference and guidance of qualified installation engineers. EU legislation governs the manufacture, operation and efficiency of all domestic oil boilers. One effect of this will be that boilers and burners will require to be supplied as matched units tested and approved to OFTEC Standard OFS Al00.

FIREBIRD Boilers are full manufacturing members of OFTEC (Oil Firing Technical Association for the Petroleum Industry) and are participating in its Boiler testing and approvals programme to comply with OFS A100 and EC Efficiency Directive.

Boilers must be installed, commissioned and serviced by qualified and experienced OFTEC approved personnel (U.K. only). It should be noted that it is the responsibility of the installer to ensure that the boiler is properly commissioned. Failure to do so may invalidate the boiler guarantee and any extended warranty.

All appropriate OFTEC manuals and BS Standards should be studied and their requirements adhered to and used in conjunction with these instructions. This manual includes a list of some BS Standards and Building Regulations.

OFTEC is conducting training and registration of engineers and this is to be commended, as reading of this manual alone for installation and servicing procedures cannot replace the critical advantage provided by training and years of experience.

1 INTRODUCTION

The Firebird System Boiler Range is based on the 'S' Range Boilers. All boilers in the range are designed and manufactured to meet all the latest European standards and the thermal efficiency requirements of the Boiler (efficiency) Regulations 1993. All Boilers can be fitted to a conventional flue or easily adapted to a room sealed unit by using a Firebird matched balanced flue kit.

The control panel can be easily accessed by the simple removal of four screws, then this assembly can be pulled forward for access to components.

Clean combustion with kitchen-quiet operation is assured by a highly efficient matching pressure jet burner which produces very low NO_x emissions. The Combi Range is a dedicated sealed system boiler having a 12 litre expansion vessel on the 50-70 and 70-90 models, on the 90-120 model there is a 14 litre expansion vessel, system filling kit and 3 bar safety valve all fitted within its cabinet.

A drain-off cock is fitted inside the boiler beside the burner and there are flow and return connections provided under top lid of the boiler for connection to the heating and hot water systems. As all servicing can be carried out from the front, the boiler many be fitted under a kitchen worktop.

The burner is factory set for use with kerosene 28 second class C fuel. However, **35 second gas oil may be used on a conventional flue installation, a oil pre-heater may be necessary.**

GUARANTEE

- **All Firebird oil Boilers have a 2 year comprehensive warranty which extends to 5 year on the boiler shell**
- **The Guarantee card must be fully completed and returned to firebird within 28 day's of installation.**
- **Consumable components, the nozzles and the oil hose are excluded.**
- **The terms laid down on the Guarantee must be adhered to.**

NOTE: Some Firebird boilers are suitable for conversion to gas. Conversion must only be undertaken by Firebird approved gas technicians using a Firebird supplied conversion kit suitable for the particular boiler.

1 HEALTH & SAFETY INFORMATION

Under the Consumer Protection Act 1987 and Section 6 of the Health and Safety Act 1974, we are required to provide information on substances hazardous to health.

Insulation and Seals

Ceramic Fibre, Alumino - Silicone Fibre material are used for boards, ropes and gaskets. Known hazards are that people may suffer reddening and itching of the skin. Fibre entering the eye will cause foreign body irritation. It may also cause irritation to the respiratory tract.

Precautions should be taken by people with a history of skin complaints or who may be particularly susceptible to irritation. High dust levels are only likely to arise following harsh abrasion.

Generally, normal handling and use will not give discomfort. Follow good hygiene practices, wash hands before consuming food, drink or using the toilet.

First Aid - Medical attention should be sought following eye contact or prolonged reddening of the skin.

The small quantities of adhesives and sealants used in the product are cured. They present no known hazards when used in the manner for which they are intended.

THIS PRODUCT HAS BEEN DESIGNED TO THE FOLLOWING STANDARDS:

EMC Directive
(Electromagnetic compatibility) 89/336/EC
Standards:
EN 61000-6-1: Electromagnetic Compatibility Generic Standard - Immunity for residential, commercial and light industrial environments. (Feb.2001)

EN 61000-6-3: Electromagnetic Compatibility Generic Standard - Emission standard for residential, commercial and light industrial environments. (Feb.2001)

LV Directive
(Low voltage) 73/23/EEC
Standard:
IEC 60335-1: Household and similar electrical appliances - Safety (May 2001)

Boiler Efficiency Directive 92/42/EEC
Standard:
BSEN 304: Oil boilers with forced draft burners.

1 FUEL SPILLAGE

1. Switch off all electrical and other ignition sources.
2. Remove all contaminated clothing to safeguard against fire risk and skin damage. Wash affected skin throughly with soap and water and remove clothing to a safe well ventilated area and allow to air before cleaning.
3. Contain and smother the spill using sand or other suitable non-combustible material.
4. Do not allow fuel to escape into drains or water courses. If this happens, contact Fire Brigade and Local Water Authority.
5. Consult local Authority about disposal of contaminated soil.

1 SAFETY

Safe use of Kerosene and Gas Oil.

These fuels give off a flammable vapour when heated moderately. Vapour ignites easily, burns intensely and may cause explosion. The vapour can follow along at ground level for considerable distances from open containers and spillages collecting as an explosive mixture in drains, cellars, etc.

Fuels remove natural oils and fats from the skin and this may cause irritation and cracking of skin. Barrier cream containing lanolin is highly recommended together with good personal hygiene.

Gas oil may also cause irreversible damage to health on prolonged or repeated skin contact.

Always store fuels in a properly constructed and labelled tank. Always handle fuel in open air or well ventilated space away from sources of ignition and refrain from smoking.

Always drain fuel using a proper fuel retriever, funnel or mechanical siphon. Never apply heat to a fuel tank, container or pipework. Never siphon fuel through tube by mouth. If accidentally swallowed contact doctor immediately and do **NOT** induce vomiting. Avoid inhaling fuel vapour as this can cause light headedness and seriously impair judgement.

1 FIRST AID

If fuel is accidentally swallowed:-

* Seek medical attention immediately. Do NOT induce vomiting.

If fuel is splashed into eyes:-

* Wash out with running water for at least ten minutes and seek medical attention.

2 TECHNICAL SPECIFICATION

2-A Diagrams

System Dimensions

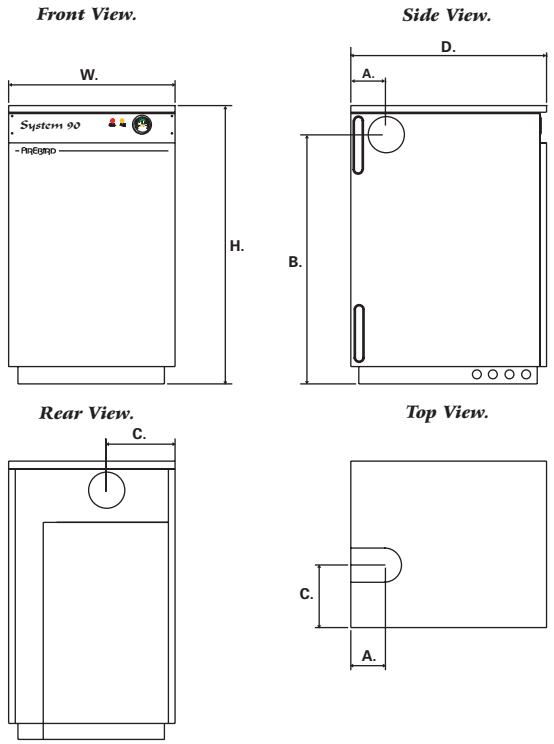

50/70 - 70/90	
H.	840mm
W.	505mm
D.	600mm
A.	155mm
B.	735mm
C.	190mm

90/120	
H.	840mm
W.	545mm
D.	600mm
A.	155mm
B.	735mm
C.	220mm

Pressure Vessel Sizes	
50-70	10 Litres
70-90	12 Litres
90-120	14 Litres

C.H. Flow & Return 22mm Copper
DMains Feed & Safety Valve 15mm Copper

Mains Feed & Safety Valve 15mm Copper
C.H. Flow & Return 28mm Copper

Heat Pac Dimensions

Heat Pac

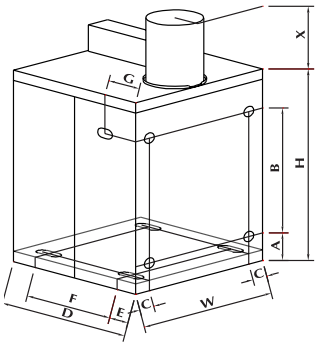

Slimline Heat Pac

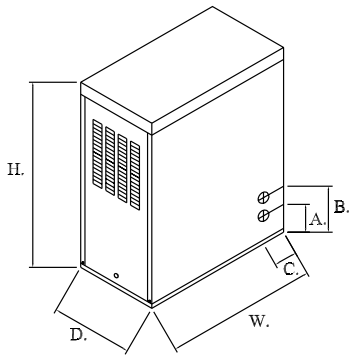

Heat Pac	Outline Dimensions				Plumbing Access Point Dimensions					
MODEL	D	W	H	X	A	B	C	E	F	G
70/90	625	655	945	310	170	575	80	100	420	175
90/120	625	710	945	340	170	575	80	100	420	175
120/150	690	720	1010	340	170	575	80	180	475	185

Slimline	Outline Dimensions			Plumbing Access Point Dimensions		
MODEL	D	W	H	A	B	C
50/70 & 70/90	410	760	925	140	230	115

FIREBIRD

2-B Technical Specifications and Recommendations

Heat Output	50-120,000 Btu/Hr
Electricity Supply	230 v - Boiler~50 Hz To be fused at 5 amp
System Pipe Connections (on boiler)	
Heating Flow	22 mm (28mm - 90-120,00 Btu/Hr)
Heating Return	22 mm (28mm - 90-120,00 Btu/Hr)
Mains Cold Water Boiler connection for filling loop	15 mm
Safety pressure Relief Valve Outlet	15 mm
All Copper Tube connections:	BS 2871 Copper Tube
Pressure Jet Oil Burner	Riello RDB or Ecoflam Flair or Bentone Sterling
Fuel	Kerosene Class C2
Circulating Pumps	Grundfos UPS 25/60
Flue Pipe Connection	
Conventional Flue Socket	To take tail piece for 4"(100mm) & 5"(125mm) S/S Flue Pipe
Balanced Flue Assembly	5"(125mm) Concentric Flue
Weight (Dry) - Incl. Pallet	50-70btu's - 160 Kg 70-90btu's - 162 Kg 90-120btu's - 177 Kg
Water Content - Total	50-70btu's - 59 Litres 70-90btu's - 59 Litres 90-120btu's - 68 Litres
Thermostats	
Boiler Central heating Control (Adjustable)	65°C - 85°C
Boiler Safety Limit	110°C
Boiler integral Expansion Vessel nominal capacity	10, 12 & 14 Litres pre-charged to 1 Bar
Heating System (Sealed)	Fit in accordance with BS 7074 Part I, BS 5449, OFTEC Standards, etc.
Max. Operating Pressure	2.5 Bar (Follow all BS & OFTEC Standards)
Max. System Pressure (Cold)	1.5 Bar
Min. System Pressure (Cold)	0.5 Bar + 0.3 Bar
Boiler Test Pressure	4.5 Bar
Safety Valve Operating Pressure	3 Bar
Heating System Pressure Gauge (mains supply excepted)	0 - 6 Bar Range
Flue Draught Reqd. (Conventional Flue)	Min: 0.040 In WG Max: 0.15 In WG
Water side resistance-10°C Diff -20°C Diff	26.8 ins WG 8.6 ins WG

2-C Burner Settings Firebird Boiler Range Kerosene Using RDB Range Of Burners (K).

Variations in nozzle throughput, flue type & draught, oil viscosity etc. may give results differing from these laboratory performance figures.

Range	Burner	Head Type	Fuel	Nozzle	P.P.	Air Shutter	Head	CO2	Fg.	Smoke No.
Burner Settings For System White Cased Model										
50,000	Riello RDB 1.	T1	K	.5 80'H	7 Bar	2.4	-	11.5	190	0-1
60,000	Riello RDB 1.	T1	K	.5 80'H	10 Bar	3.9	-	11.5	200	0-1
70,000	Riello RDB 1.	T3	K	.6 80'H	8 Bar	4.25	-	11.5	210	0-1
80,000	Riello RDB 1.	T3	K	.6 80'H	9.5 Bar	4.8	-	11.5	195	0-1
90,000	Riello RDB 1.	T3	K	.75 80'S	8 Bar	6	-	11.5	210	0-1
90,000	Riello RDB 2.	T3	K	.75 80'S	8 Bar	6	-	11.5	190	0-1
110,000	Riello RDB 2.	T3	K	1.00 80'S	7 Bar	2.6	-	11.5	190	0-1
120,000	Riello RDB 2.	T3	K	1.00 80'S	9 Bar	3.5	-	11.5	190	0-1
125,000	Riello RDB 3.	Comb.	K	1.00 80'S	9 Bar	1.9	0	11.5	210	0-1
135,000	Riello RDB 3.	Comb.	K	1.25 60'S	7 Bar	2.2	1	11.5	210	0-1
150,000	Riello RDB 3.	Comb.	K	1.25 60'S	8 Bar	2.5	1.5	11.5	210	0-1
Burner Settings For System Heat Pac Model										
50,000	Riello G5X.	T1	K	.5 80'H	8 Bar	1.2	-	11.5	190	0-1
60,000	Riello G5X.	T1	K	.5 80'H	10 Bar	1.35	-	11.5	200	0-1
70,000	Riello G5X.	T3	K	.6 80'H	8 Bar	1.8	-	11.5	210	0-1
80,000	Riello G5X.	T3	K	.6 80'H	9.5 Bar	2.15	-	11.5	200	0-1
90,000	Riello G5X.	T3	K	.75 80'S	8 Bar	2.65	-	11.5	210	0-1
90,000	Riello G5X.	T3	K	.75 80'S	8 Bar	2.65	-	11.5	190	0-1
110,000	Riello G5X.	LD3-5	K	.85 80'S	8 Bar	2.75	-	11.5	200	0-1
120,000	Riello G5X.	LD3-5	K	.85 80'S	10 Bar	3.4	-	11.5	210	0-1
125,000	Riello G7.	Comb.	K	.85 80'S	10 Bar	2	0	11.5	200	0-1
135,000	Riello G7.	Comb.	K	1.25 60'S	9 Bar	2.9	1	11.5	210	0-1
150,000	Riello G7.	Comb.	K	1.25 60'S	8 Bar	3	1.5	11.5	210	0-1

The above performance figures are based on ideal laboratory test conditions.

Air shutter settings above may need to be revised to take into consideration difference in resistances between conventional and balanced flue installations. Use flue gas analyser to achieve optimum results.

2-D&E Riello Burner Specification

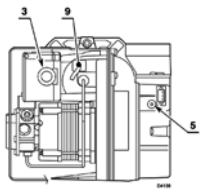

Burner Description

One stage kerosene and oil burner.

In case of BF applications the intake air temperature must not be over 70C

The burner meets protection level of IP 40, EN 60529.

Burnerwith CE marking in conformity with EEC directives: EMC 89/336/EEC, Low Voltage 73/23/EEC, Machines 98/37/EEC and Efficiency 92/42/EEC.

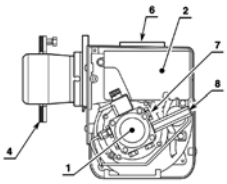

Burner Equipment

Flange with insulating gasket..... No.1
Screw and nut for flange..... No.1
Grill (CF Application)..... No.1
Bolts for flange to be fixed to boiler..No.4
Hexagonal Key..... No.1
Screw of by-pass pump..... No.1
Flexible oil pipe with nipple..... No.1

1. Pump
2. Control-box
3. Reset button with lock-out lamp
4. Flange with insulating gasket
5. Air damper adjustment screw
6. Snorkel (BF)
7. Pump pressure adjustment screw
8. Pressure gauge port
9. Photoresistance

HYDRAULIC SYSTEMS

WARNING:

The pump is designed to allow working with one pipe. In order to obtain two pipes working it is necessary to unscrew the return plug (2), screw the by-pass screw (3) and connect return flexible hose. (See fig. 5).

In the two pipes systems, before starting the burner make sure that the return pipe-line is not clogged. An excessive back pressure would cause the damage of the pump seal.

Fig. 5

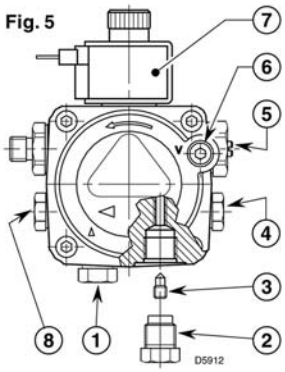

1 - Suction line
2 - Return line
3 - By-pass screw
4 - Gauge connection
5 - Pressure adjuster
6 - Suction gauge connection
7 - Valve
8 - Auxiliary pressure test point

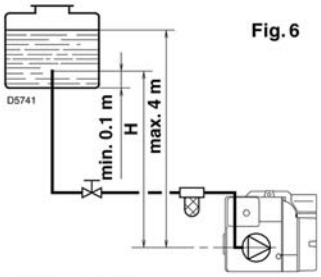

Fig. 6

H meters	L meters	
	I. D. 8 mm	I. D. 10 mm
0.5	10	20
1	20	40
1.5	40	80
2	60	100

PRIMING PUMP:

On the system in fig. 6 it is sufficient to loosen the suction gauge connection (6, fig. 5) and wait until oil flows out.
On the systems in fig. 7 and 8 start the burner and wait for the priming. Should lock-out occur prior to the arrival of the fuel, await at least 20 seconds before repeating the operation.
The pump suction should not exceed a maximum of 0,4 bar (30 cm Hg). Beyond this limit gas is released from the oil. Oil pipes must be completely tight.
In the vacuum systems (fig. 8) the return line should terminate within the oil tank at the same level as the suction line. In this case a non-return valve is not required. Should however the return line arrive over the fuel level, a non-return valve is required. This solution however is less safe than previous one, due to the possibility of leakage of the valve.

H meters	L meters	
	I. D. 8 mm	I. D. 10 mm
0	35	100
0.5	30	100
1	25	100
1.5	20	90
2	15	70
3	8	30
3.5	6	20

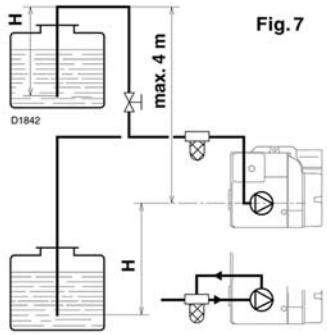

Fig. 7

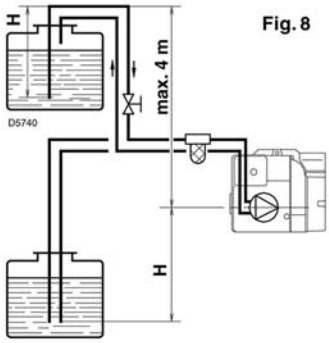

Fig. 8

Check periodically the flexible pipes conditions.
Using kerosene, they have to be replaced at least **every 2 years.**
A metal bowl filter with replaceable micronic filter must be fitted in the oil supply pipe.

H = difference of level. **L** = Max. lenght of the suction line. **I.D.** = Interminal diameter of the oil pipes.

2-D&E Riello Burner Specification

ELECTRICAL WIRING

WARNING DO NOT EXCHANGE NEUTRAL WITH PHASE

~ 50Hz - 230V

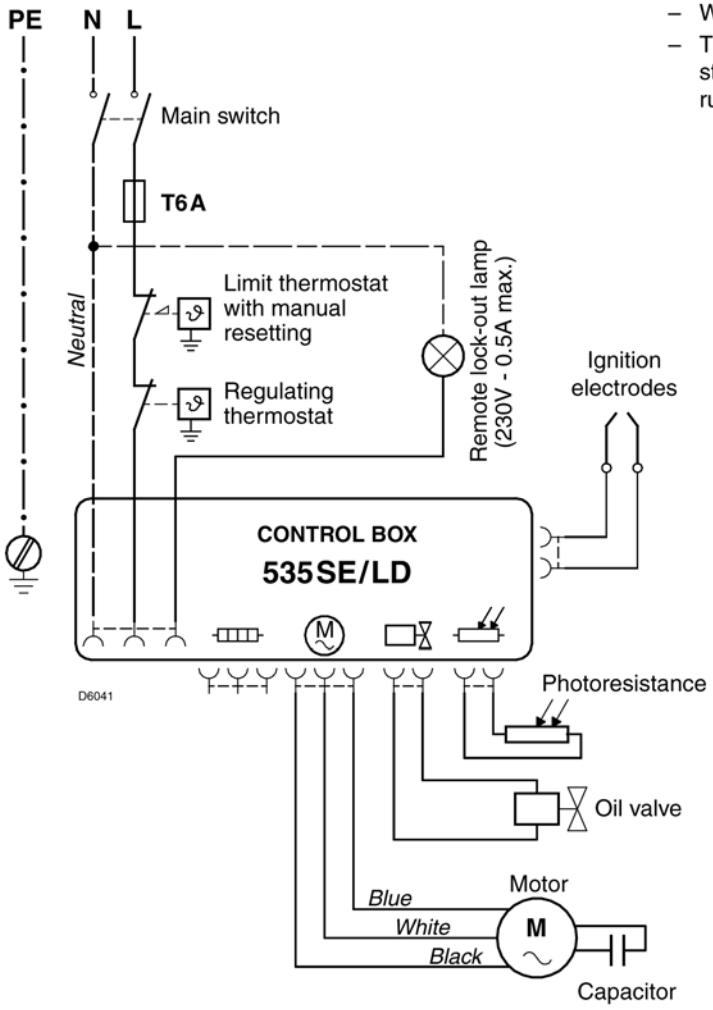

NOTES:

- Wires of 1 mm2 section.
- The electrical wiring carried out by the installer must be in compliance with the rules in force in the Country.

TESTING:

Check the shut-down of the burner by opening the thermostats and the lock-out by **darkening** the photoresistance.

CONTROL BOX (see fig. 9)

To remove the control box from the burner follow of the istruction:

Loosen the screw (1), open the protection (2) and remove all components.

Remove the coil (3).

Loosen the two screws (4).

Move a little the control box and remove the high voltage leads.

Fig. 9

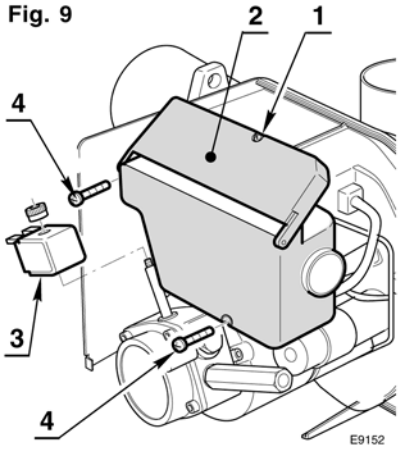

2-D&E Riello Burner Specification

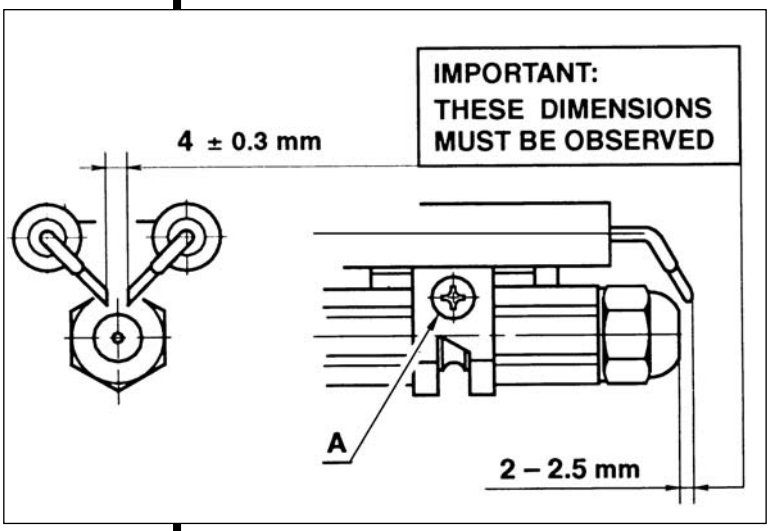

ELECTRODE SETTING

Riello RDB

Attention

Before assembling or removing the nozzle loosen screw (A) and move electrodes forward.

RIELLO BURNER START-UP CYCLE

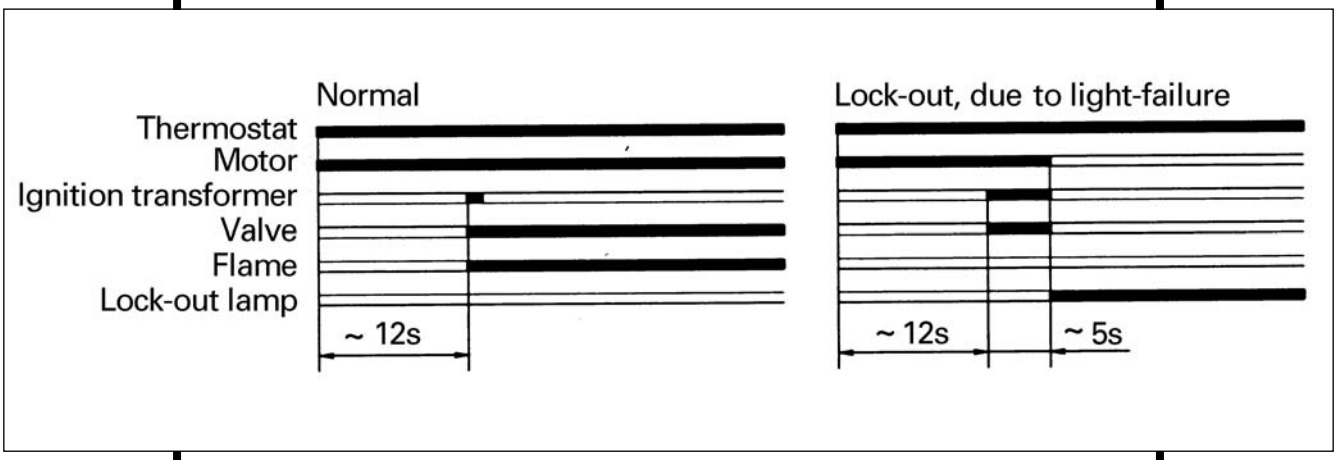

NOTE: Above information provided relevant to Riello RDB Burner. The Firebird 'S' Range has been tested and will operate equally efficiently using Ecoflam or Sterling Burners which may also be fitted as original equipment.

Refer to separate burner instructions booklet packed with boiler. Separate Riello Burner instructions are also included when these burners are fitted. Always consult these as variations in specification can occur from time to time which may not be included in this manual. Information is more complete in appropriate burner manuals.

2-G Wiring Diagram

FIREBIRD 'S' Kitchen Models

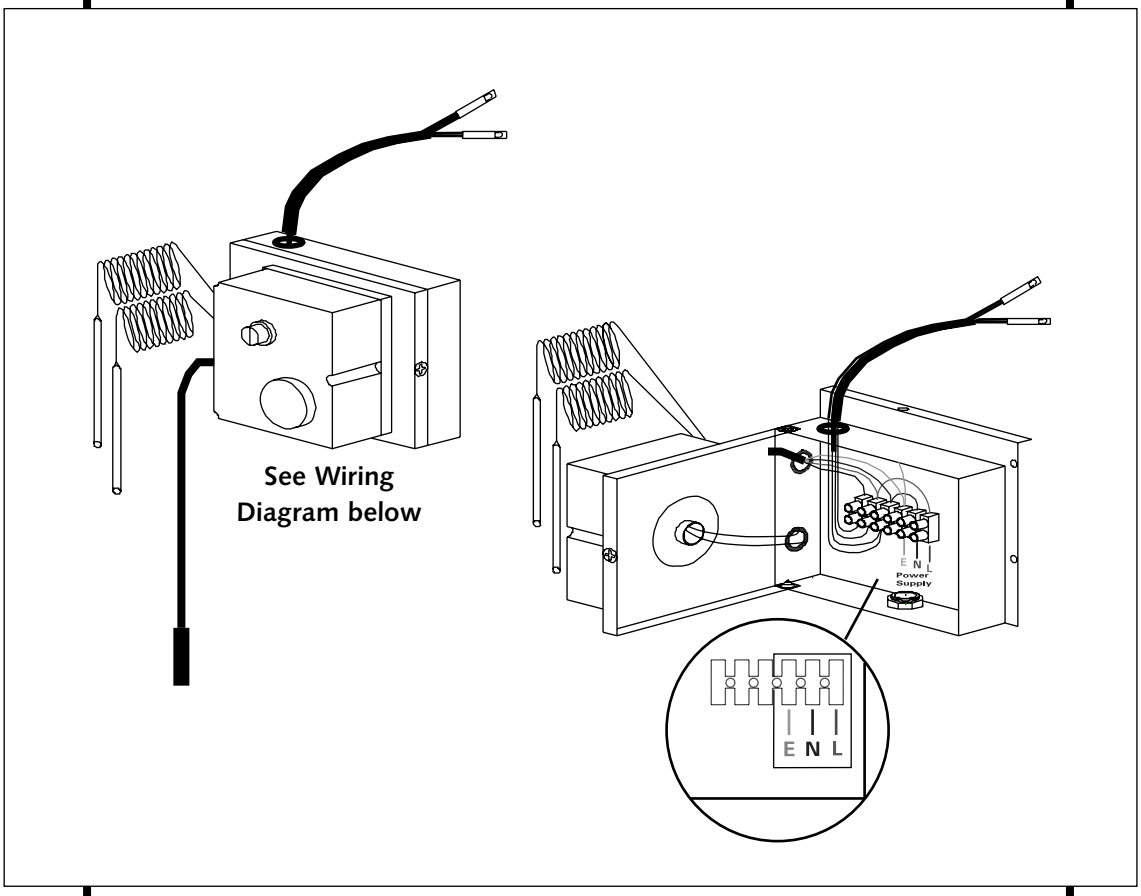

2-H Dual Thermostat

FIREBIRD 'S', System Boiler

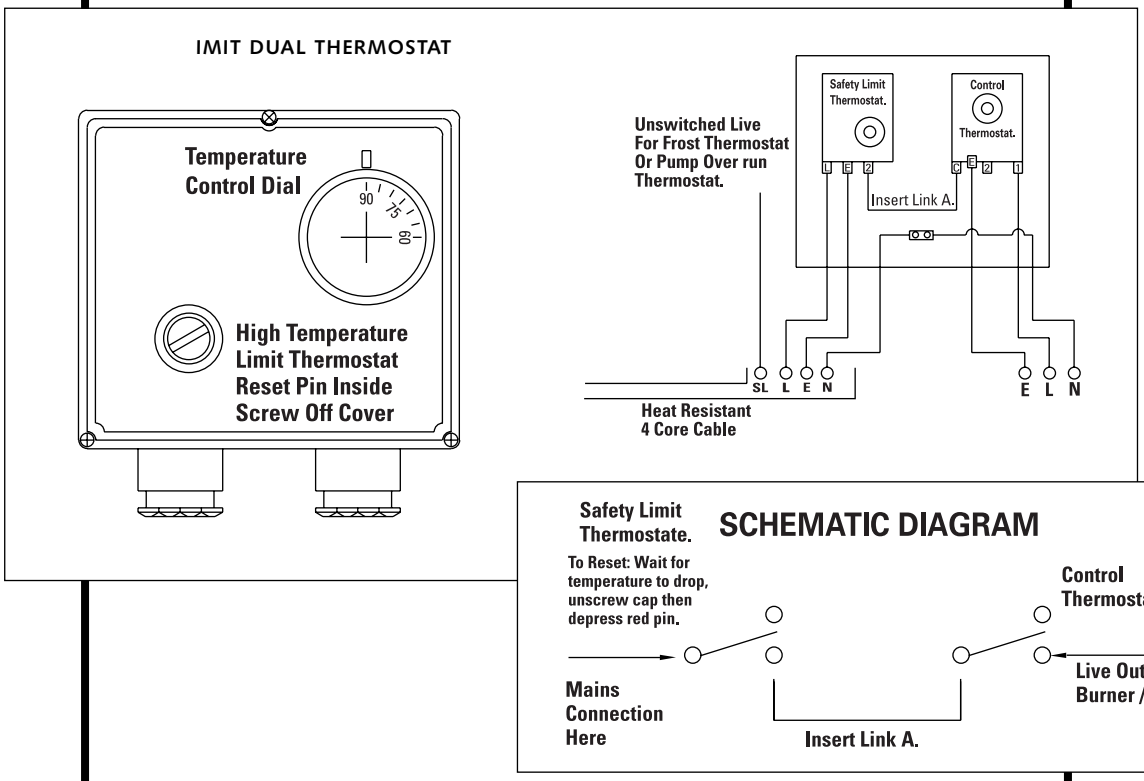

3 OPERATING INSTRUCTIONS

3-A Boiler Controls

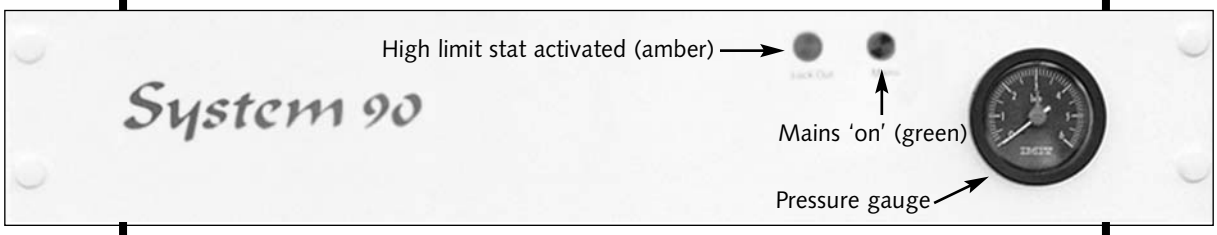

3-B Operating Procedure

(All models)

To start the boiler follow this sequence:

- Turn on fuel supply.
- Switch power supply to boiler 'ON'.
- For Model S remove front cover (see diagram C)
- Activate the 'mains on' switch.
- Set the boiler thermostat to the required temperature. The boiler thermostat controls the boiler operation by automatically maintaining the required boiler water temperature output. Safe operation is also maintained by the burner control system which provides the required ignition and shut off sequence. If the optional timer control is fitted this will automatically switch the boiler off and on when heat is required.

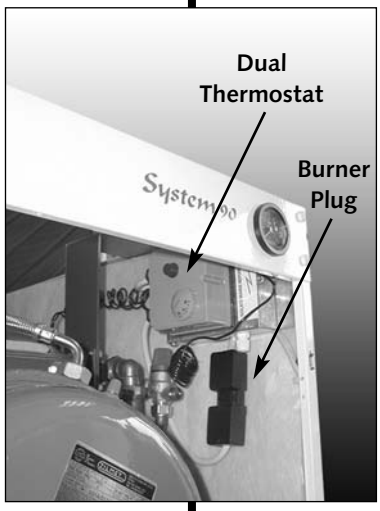

The boiler can be turned off by any of the following means:

- Turn the timer control (if fitted) to OFF.
- Turn the boiler thermostat to OFF.
- Turn the mains 'ON' switch to OFF.
- Turn OFF the mains electrical supply to the boiler.

When servicing always switch off the mains supply to the boiler.

HEAT PAC WIRING DIAGRAM

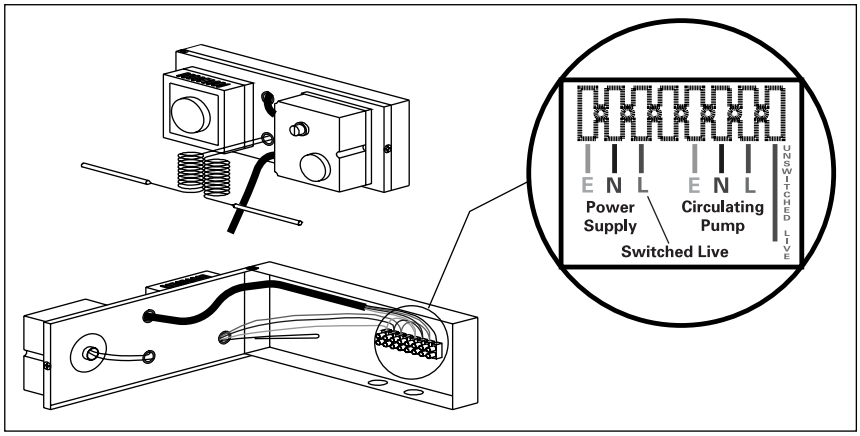

WARNING

Re: Wiring of Firebird Heat Pac's

In the situation where the primary flow from the boiler is plumbed down to connect with the heating system, the fitting of a pump over run thermostat (A Pipe Thermostat) is recommended.

A **4-core** cable should be used in this case to supplying power to the unit. The fourth wire in the 4-core cable can be used to bring a seperate power supply to power the circulating pump, through the over run thermostate. This will keep the circulating pump running after the power supply controlling the boiler has been switched off, therefore not allowing a residual heat build up in the boiler activating the safety high limit stat.

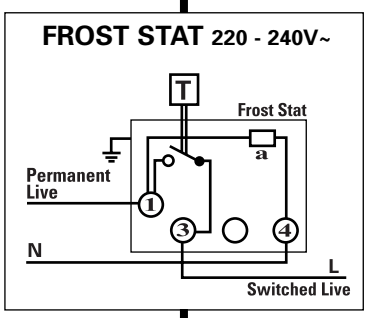

FIREBIRD

3-C Burner Lockout

To reset when Lock-out light shows: Press glowing reset button on burner control box.

Reset Button Inside Burner Box

The boiler is factory fitted with a burner control box lockout safety feature which operates automatically if a fault occurs in the burners operation. Should this occur, the **RED** light on the front of the boiler control panel - See diagram on previous page - will illuminate and its cause must be investigated. This could be caused by:

A. An interruption in the fuel supply. (Eg. empty oil supply tank)

B. An electrical supply fault.

C. A fault with the burner or its safety control system.

D. The failure of a component. (Eg. photo cell)

E. Worn or dirty oil nozzle.

Before attempting to restart the boiler the front panel and the burner cover should be removed and a visual check made for any obvious problems such as oil leaks, loose connections etc.

ENSURE OIL TANK CONTAINS CORRECT GRADE FUEL.

To restart the boiler

1. Press reset button (see diagram above)

2. Ensure that the boiler thermostat, time switch (if fitted) and any external controls connected to the boiler are set to call for heat.

3. Check that the oil supply valves are open and that there is sufficient oil in the tank.

4. Check that the burner lockout light is unlit and with the 'MAINS ON' the boiler will be ready to commence its start sequence.

Servicing

The boiler requires servicing on an annual basis to ensure it maintains its efficiency, continues to perform reliably and as a regular check on its built-in safety features.

It is important that servicing should be conducted by a competent engineer, one who is OFTEC trained and registered.

Please note: As a pre-heater kit maybe required to be fitted to the burner when using 35-second gas oil (only allowed on conventional flue applications) this means that annual servicing is usually sufficient - **although more regular servicing may be required depending on use.**

4-A Standards & Regulations

To ensure the highest standards of installation & safety, it is important that the boiler be installed in compliance with the following regulations where applicable.

All **CURRENT** editions of the appropriate Building Regulations:-

Part G & J England & Wales
Part F, Section III Scotland
Part L Northern Ireland
Part J Republic of Ireland

BS 5410 Part 1 1997. Code of practice for Oil Firing Installations.
BS 799 Part 5 1987. Specification for Oil Storage Tanks.
BS 4876 1984. Performance requirements for oil burning appliances.
BS 5449 1990. Specification for Forced circulation hot water central heating systems for domestic premises.
BS 7074 Part 1 1989. Application, selection and installation of expansion vessels and ancillary equipment for sealed water systems.
BS 5446 1990. Installation of hot water supplies for domestic purposes.
BS 7593 1992. Code of Practice for treatment of water in heating systems.
BS 715 1989. Metal flue pipes, fittings, terminals and accessories.
BS 1189 1989. Clay flue linings and flue terminals.
BS 4543 part 3 1990. Factory made insulated chimneys for oil fired appliances.
BS 6700. Design, installation, testing and maintenance of Services supplying water.
BS 7671.
Current IEE Regulations.
Local Water Undertaking Byelaws.
The Control of Pollution (Oil) Regulations.

In addition, **the work must comply with OFTEC Installation Requirements for oil fired boilers and oil storage tanks.**

The installer should also be aware of his/her responsibilities under The Health and Safety at Work Act. The interests of safety are best served if the boiler is installed and commissioned by a competent engineer, OFTEC trained and Registered or trained to other recognised standards.

☛ It is the responsibility of installer and everyone concerned with any aspect of installation to ensure that all **applicable standards and regulations are fully adhered to**. ☚

OFTEC also publish excellent guides including:-
- Safe Working Practices for Oil Firing Technicians'
- OFTEC Technical Book Three (Installation requirements for Oil Fired Boilers and Oil Storage Tanks)
- OFTEC Technical Book Four (Domestic Heating Systems)

and it is recommended that these should be adhered to.

Copies of British Standards may be purchased direct from:
BSI (Customer Services), 389 Chiswick High Rd., London W4 4AL
Tel.: 0181-9967002 Fax: 0181-9967001
International and EC Standards are also available from above

OFTEC Publications are available from:-

OFTEC,
Oil Firing Technical Association,
Foxwood House, Dobbs Lane,
Kesgrave, Ipswich.
IP5 2QQ

FIREBIRD

4-B
Positioning Boiler

Ensure that adequate clearance is available for making the water and flue connections.

As the boiler is serviced from the front, no headroom clearance is necessary but a clearance of 750mm must be available at the front of the boiler.

No special hearth is required as the boiler is fully insulated, but the floor must be level and capable of supporting the weight of the boiler and its water content.

Sound levels must also be a consideration. Whilst the Firebird Combi Range are one of the quietest boilers on the market, some householders are particularly sensitive and the following points should be considered:

1. Tiled surfaces in a small room will amplify noise - particularly if the wall construction is hollow.

2. If a conventional flue passes through a bedroom it is capable of transmitting noise.

3. Low level balanced flue terminals can produce exhaust noise on the outside terminal and this should be considered when siting near adjacent property.

4. Firebird do not recommend the use of a low level flue's on white cased indoor boilers.

5. The Firebird low level concentric flue kit has been specifically designed for Firebird's indoor boilers. The use of third party low level flue kits is not recommended and may affect its warranty.

4-C Flue Systems

IMPORTANT

Because of the improved efficiencies of boilers under E.U. Efficiency requirements and OFS A100 Standard, it is necessary to pay extra special attention to flues and chimneys. The improved efficiency figures achieved by modern oil boilers are attained by using more of the heat (higher temperatures) heretofore allowed into flues and chimneys. This previously wasted heat helped to keep bad and poorly operating and often uninsulated flues and chimneys from condensing and causing problems. Please be fully aware of this when replacing an existing boiler. An old and poorly operating flue may need to be replaced to take full advantage of improved efficiencies and to avoid flue gases condensing and appearing as white water vapour (pluming) at flue (chimney) outlet.

New flues and chimneys should be properly insulated and constructed to prevent condensation and draughting problems. Every individual concerned with any aspect of installation should be aware of the foregoing and should have full knowledge of and **work to European, National and Local Govt. Standards and Building and Installation Regulations**.
These manufactures instructions must not in any way be mis-interpreted as over-riding the above or any statutory regulations. It is absolutely essential that the boiler is properly installed so that NO FLUE GASES can enter the building at any time. Flue pipes should be safely sealed into the wall to prevent flue gases re-entering room or building. Refer also to page 23.

Conventional Brick Chimney With Liner

NOTE:
All brick chimney constructions must comply with current building regulations and BS 5410: Part 1. Insulated factory made chimneys should comply with BS 4543.

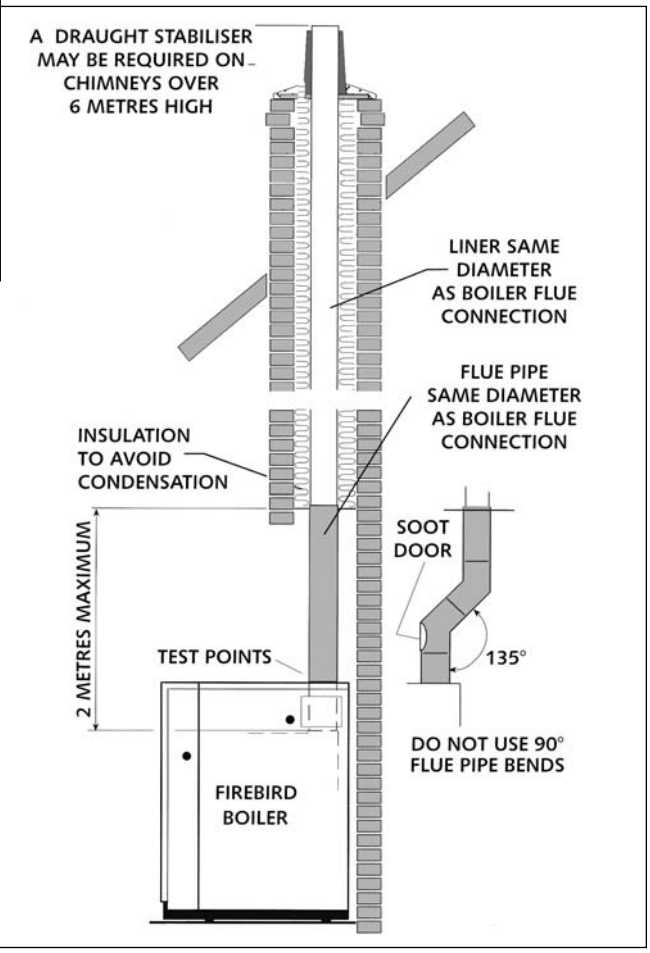

4-D Balanced Flue Siting

A. Below a gutter or sanitary pipework.

B. Horizontal from opening, airbrick, window etc.

C. Above ground or balcony level.

D. Below eaves or balcony

E. From an internal or external corner.

F. From a terminal facing the terminal.

G. From a surface facing the terminal.

H. Vertical from terminals on the same wall.

I. Horizontal from terminals on the same wall.

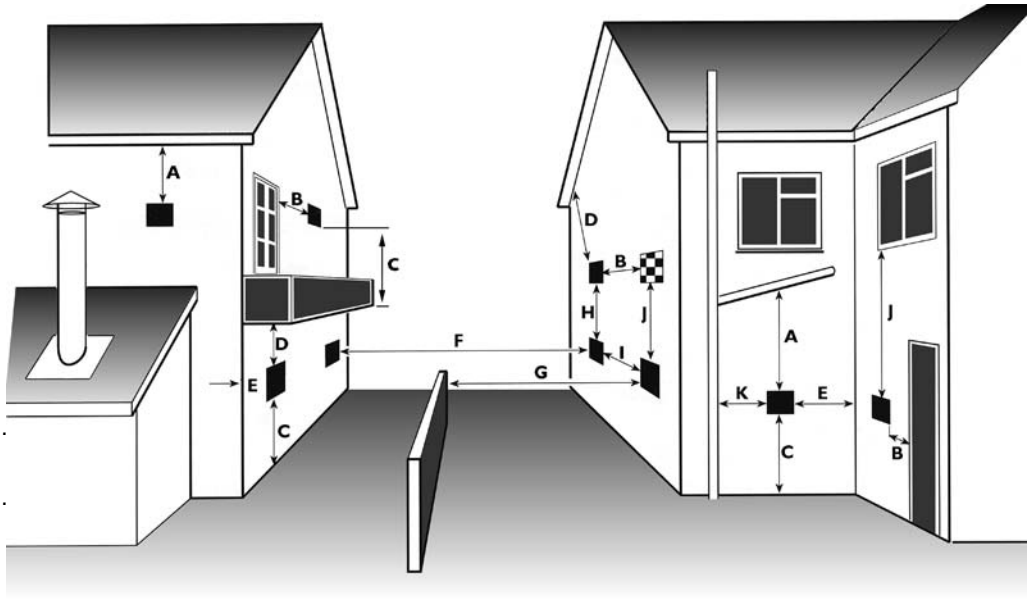

J. Below an opening, airbrick, window etc.

K. From vertical sanitary pipework.

L. Vertical flue from wall.

Information supplied by OFTEC Book three Nov. 1997

See note at foot of page

Notes:

1. The terminal should be positioned to avoid combustion products entering the building or accumulating in stagnant pockets around buildings.
2. The terminal must be protected by a guard if it is less than 2 metres above ground level or in a position where any person has access to it (i.e. a balcony).
3. A heat protection shield should be fitted if the terminal is less than 850mm from a plastic or painted gutter or less than 450mm from painted eaves.

Building Regulations

	A	B	C	D	E	F	G	H	I	J	K
England & Wales 1991	-	600	-	-	600	-	-	-	-	600	-
Scotland 1990 Balanced*	600	-	600	600	600	600	600	1500	600	600	600
Low level*	1000	-	600	1000	600	600	600	1500	600	600	1000
Northern Ireland 1994	-	600	-	-	600	-	-	-	-	600	-
Republic of Ireland 1997	-	600	-	-	600	-	-	-	-	600	-

*Where the terminal is within 1 metre of any plastic material, such material should be protected from the effects of combustion products of fuel. There are additional general requirements in most Regulations and Standards that the flue must be positioned so that it does not cause a nuisance and permits the dispersal of combustion products.

NOTE: The Buildings Regulations clearances shown above are **minimum** allowed. Account should also be taken of prevailing site conditions, as the above minimums may in certain circumstances need to be increased. If in doubt contact manufacturer for advice.

Always check for any Building Regulations amendments which may have been issued after the publication of this manual

4-D Clearances advised by the **British Standards** for Open, and Balanced Flues fitted to Oil Fired Boilers

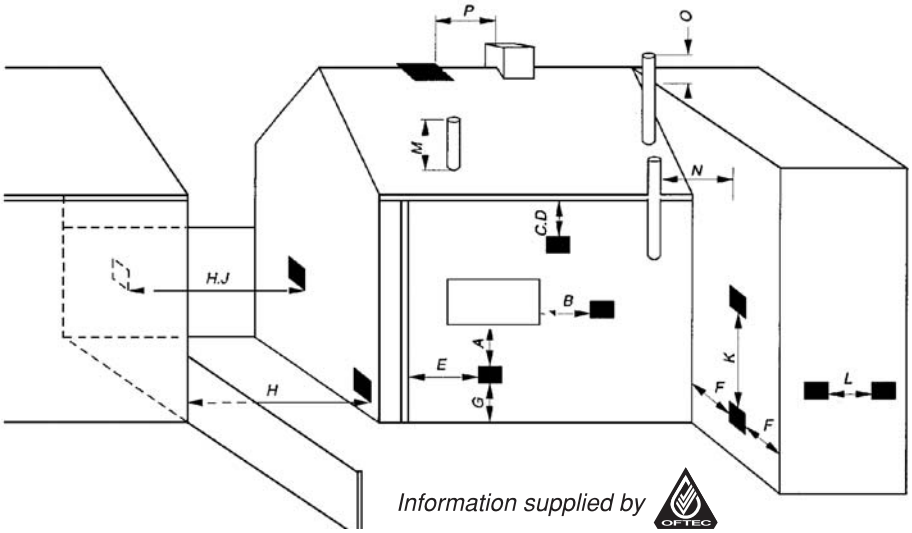

Minimum distances to terminals in millimetres as measured from top of the chimney or the rim of a low level discharge opening

A	Directly below an opening, air brick, window etc	600
B	Horizontally to an opening, air brick, window etc	600
C	Below a gutter, eaves or balcony with protection	75
D	Below a gutter or a balcony without protection	600
E	From vertical sanitary pipework	300
F	From an internal or external corner	300
G	Above ground or balcony level	300
H	From a surface or boundary facing the terminal	600
J	From a terminal facing the terminal	1200
K	Vertically from a terminal on the same wall	1500
L	Horizontally from a terminal on the same wall	750
M	Above the highest point of an intersection with the roof	600
N	From a vertical structure on the side of the terminal	750
0	Above a vertical structure less than 750mm from the side of the terminal	600
P	From a ridge terminal to a vertical structure on the roof	1500

These notes form an integral part of the information shown above.

1. Terminals should be positioned so as to avoid products of combustion accumulating in stagnant pockets around the building or entering into buildings.
2. Appliances burning Class D oil have additional restrictions.
3. Vertical structure in N, 0 and P include tank or lift rooms, parapets, dormers etc.
4. Terminating positions A to L are only permitted for appliances that have been approved for low level flue discharge when tested to OFS A1OO or A1O1.
5. Terminating positions must be at least 1.8 metres distant from an oil storage tank unless a wall with at least 30 mins fire resistance and extending 300mm higher and wider than the tank is provided between the tank and the terminating position.
6. Where a flue is terminated less than 6OOmm away from a projection above it and the projection consists of plastic or has a combustible or painted surface, then a heat shield of at least 750mm wide should be fitted to protect these surfaces.
7. For terminals used with vapourising burners, a horizontal distance of at least 2300mm is required between the terminal and the roof line.
8. If the lowest part of the terminal is less than 2 metres above the ground, balcony, flat roof or other place to which any person has access, the terminal must be protected by a guard.

4-E Ventilation and Combustion Air

1. Conventional Flue Boilers

An adequate supply of **combustion and ventilation air** is essential for efficient and safe boiler operation and the openings for this should be positioned to cause least possible draught, **with no possibility of being accidentally blocked.**

Please note: The British Standard Code of Practice for Oil Firing BS5410: Part 1, requires a permanent air inlet opening of
550mm² per kW (above 5 kW)
of boiler rated output. (Note: 1kW = 3412 Btu/h).

Also, when the boiler is installed in a compartment or confined space, **ventilation** openings are required to ventilate and to avoid overheating in the boiler area.

Combustion & Ventilation air supply for conventional open flue boilers

The figures shown are free areas of grilles in mm² per kw of appliance rating (output).

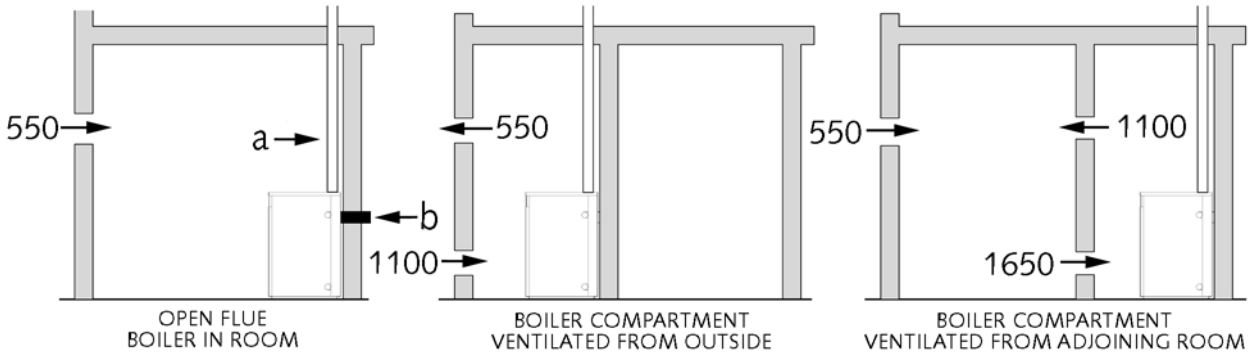

Conventional open flue (a) or open flue low level discharge (b)

Information supplied by OFTEC

FULL TEXT of both BS 5410 Part 1: 1997 and appropriate Building Regulations for each country should be obtained and fully applied

N.B. Please Carefully Note:

A. For boiler installations in domestic garages in Scotland, Part F of Building Regulations permits **only** Room Sealed appliances to be used (Ref. OFTEC Bk. Three May 1999 page 1 (18).

B. Technical annex T1/127 to OFTEC Book Three, May 1999 page 2 (19) Para. 1, 2 states "In Scotland and the Republic of Ireland **only** Room Sealed Balanced Flue Appliances can be used in that location" (i.e. domestic garages).

Definitions

Combustion Air : Air required directly by boiler oil burner for combustion process.

Ventilation Air : Air required in room for ventilation, cooling, etc. and to promote a healthy living environment.

4-E
2. Balanced Flue Boilers

The Firebird boiler may be set for Room-sealed balanced flue operation using a Firebird balanced flue kit and then does **not** draw **combustion air** from inside the room. **It is drawn from outside direct to burner by airpipe supplied with boiler.** Flue gases are expelled in the same way. However, if the boiler is installed in a **compartment** or **small room**, some **ventilation air** is necessary to maintain acceptable temperature in boiler area

Balanced flue boiler in room (eg. kitchen) does not require individual ventilation.

BALANCED - FLUE BOILERS IN COMPARTMENTS

Information supplied by OFTEC

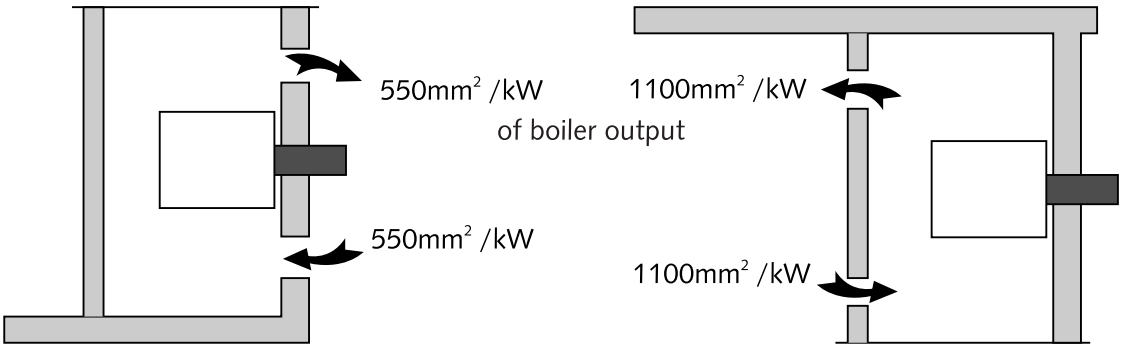

COMPARTMENT VENTILATED FROM OUTSIDE

COMPARTMENT VENTILATED FROM ROOM

4-F Domestic Heating & Hot Water Systems

HVCA Codes of Practice and BS 5449: Part 1 "Forced Circulation Hot Water Systems" should be adhered to when installing the boiler. Refer also to Regulations and Standards listed on page 14.

Electrical Supply

The boiler and controls require 230V 1 phase 50Hz electric supply with a 5amp fuse.

THIS APPLIANCE MUST BE EARTHED.

A qualified electrician must carry out all electric wiring in accordance with current I.E.E Regulations and any local regulations which may apply.

The mains electrical supply must be taken from a double pole isolating switch with a 5amp fuse, positioned somewhere close to the boiler. Heat resisting cable must be used which can be routed into the boiler through the access provided on either side of the base.

Ancillary controls may be provided for with terminal connections in the control panel.

5 OIL SUPPLY

The boiler burner is factory set to use 28-second kerosene. However, Gas oil 35-second can be used with a conventional flue installation **if** a PRE-HEATER is also fitted. Note: Gas Oil 35sec **may not** be used with a balanced flue installation.

If boiler location allows use of 35 sec.Gas Oil, pump pressure should be increased and air settings readjusted as necessary. **This adjustment should be carried out by qualified persons only.**

5-A Oil Storage Tank Siting

Consult OFTEC Manual

It is very unlikely that a fire should start from a domestic oil tank, however it does need to be protected from a fire which may originate in a building nearby. For this reason, the tank should be located at least 1.8 metres from any building and no closer than 760mm from any boundary. If it must be closer than 1.8 metres, the building wall should not have any openings other than ventilation openings. In addition, the wall should have a half hour resistance to an internal fire and extend 1.8 metres from any part of the tank.

A non-combustible radiation barrier is an alternative but this must meet the requirements of BS 5410 Part 1: 1994, "clause 28" Section 6.4.

Steel tanks must be mounted on brick or block piers with a waterproof membrane between the piers and tank.

Polyethylene tanks do not need pier supports and may be mounted on any flat surface which can support the weight of the tank and its contents. They also do not corrode and never require painting.

Oil storage tanks **should not be sited** close to boiler flue outlets.

Do not allow household waste or hot ashes container in vicinity of oil storage tank or boiler flue outlet.

5-B Flexible Oil Pipe(s)

A flexible burner oil hose is supplied with the boiler.
Please note: A filter must not be fitted inside the boiler and all joints in the oil line must be oil-tight. Soldered joints are not permissible. Before connecting to the boiler always flush the complete oil supply line and ensure that oil supply is completely clean and free of any dirt or foreign matter.

5-C Single Pipe System

Where installations have the bottom of the tank above the oil burner, a single pipe system may be used.The oil burner should then be set for single pipe operation - **See also manufacturers oil burner manual**

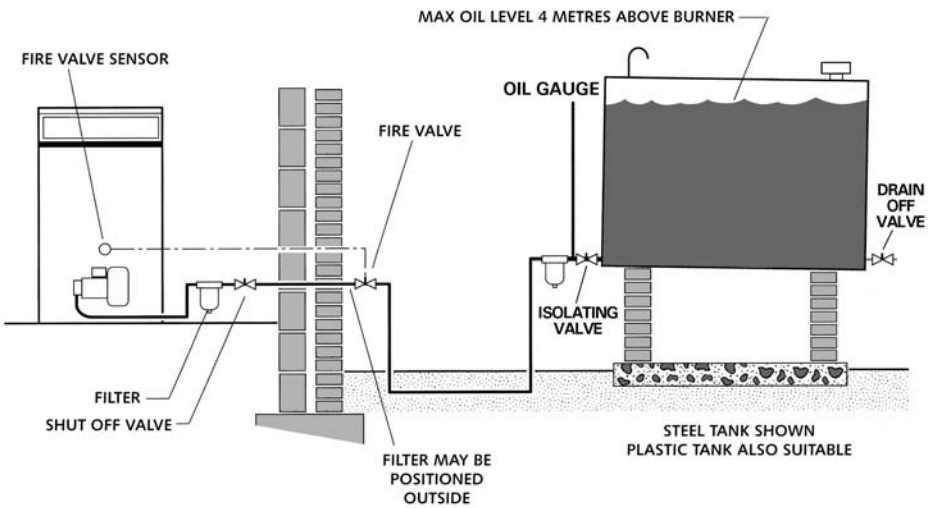

5-D Two Pipe Systems

Where installations have the bottom of the tank below the oil burner pump a two pipe system is required. Ensure that valves and filters are not fitted in the return line as this must be unobstructed at all times.

The oil burner pump should be set for two pipe operation as detailed in accompanying oil burner manufacturers manual, refer also to page seven of this manual - section 2E+F

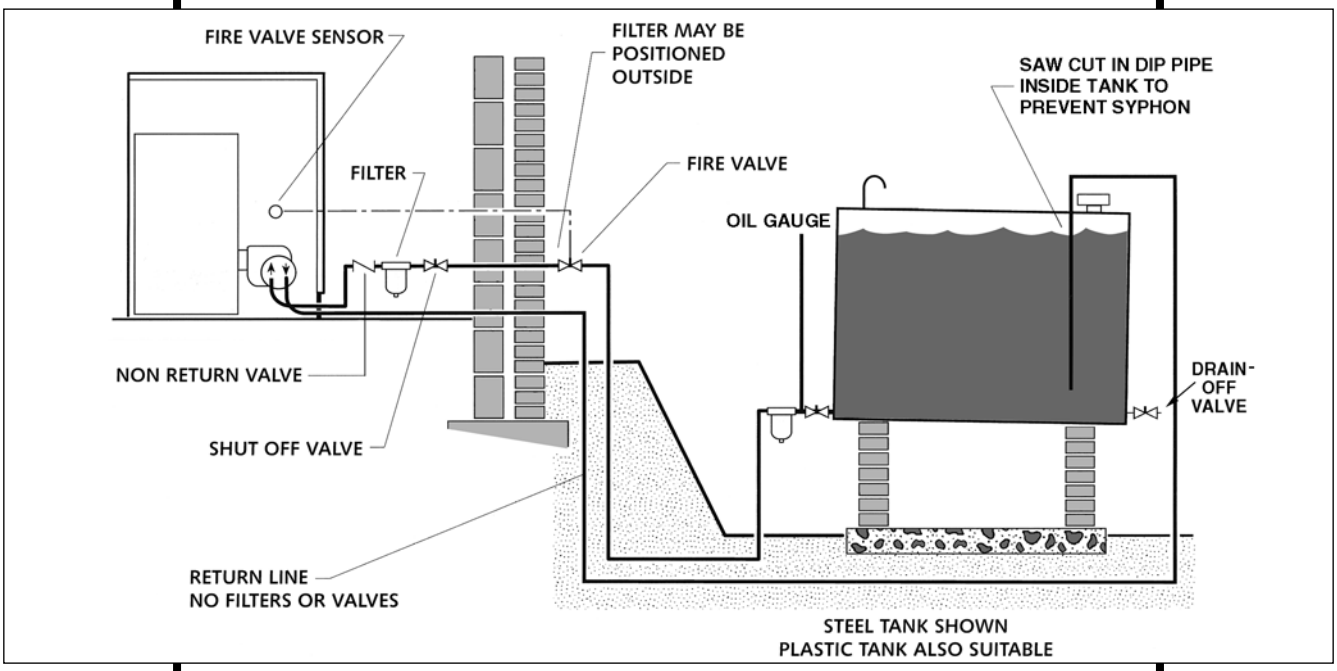

5-E Tigerloop Single Pipe Systems

IMPORTANT: The Tigerloop should not be fitted inside the dwelling - See drawing below and OFTEC manual book 3 page 2(10)

Where installations normally require a two pipe system but have long or impractical return line runs, a 'Tigerloop' De-aerator can be used which removes air from a single - pipe - lift oil feed. Higher lift heights can be achieved than are possible with conventional two pipe systems.

The oil burner pump should be set for two pipe operation.

Individual Tigerloop instructions must be implicitly followed.

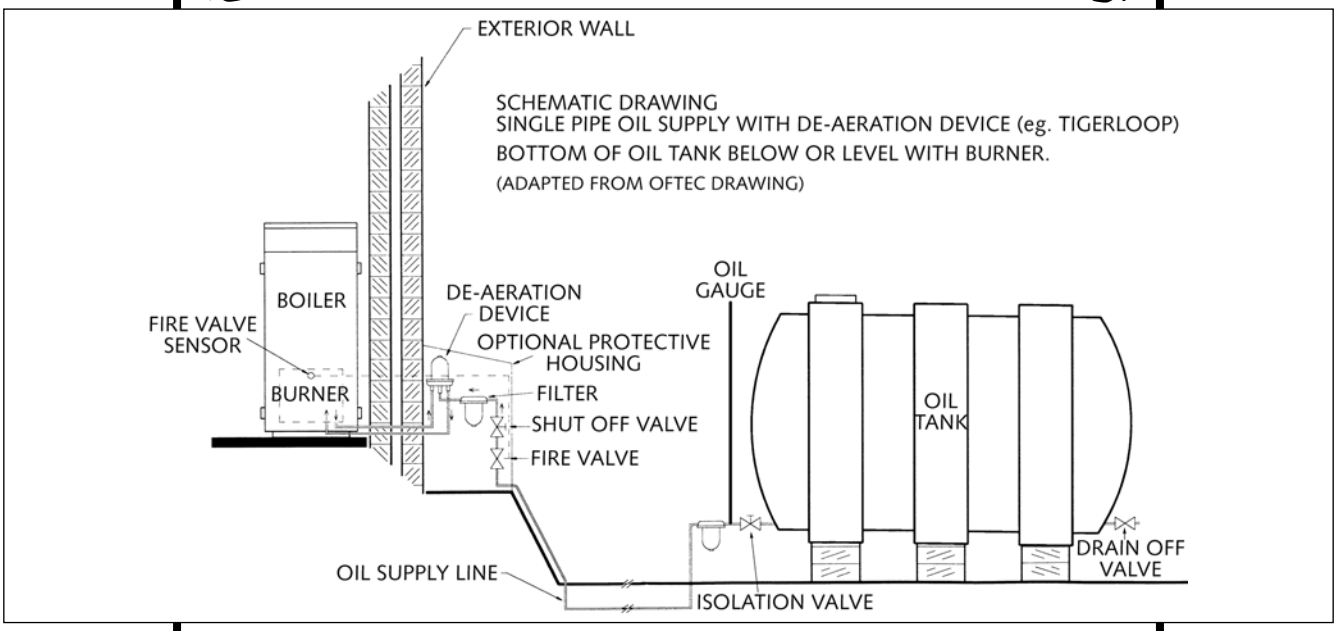

6 FLUE SYSTEMS

6-A Important Notice

Because of the improved efficiencies of boilers under E.U. Efficiency requirements and OFT A100 Standard, it is necessary to pay extra special attention to flues and chimneys. The improved efficiency figures achieved by modern oil boilers are attained by using more of the heat (higher temperatures) heretofore allowed into flues and chimneys. This previously wasted heat helped to keep bad and poorly operating and often uninsulated flues and chimneys from condensing and causing problems. Please be fully aware of this when replacing an existing boiler. An old and poorly operating flue may need to be replaced to take full advantage of improved efficiencies and to avoid flue gases condensing and appearing as white water vapour (pluming) at flue (chimney) outlet.

New flues and chimneys should be properly insulated and constructed to prevent condensation and draughting problems. Every individual concerned with any aspect of installation should be aware of the foregoing and should have full knowledge of and work to **European, National and Local Govt. Standards and Building and Installation Regulations**.
These manufactures instructions must not in any way be mis-interpreted as over-riding the above or any statutory regulations. It is absolutely essential that the boiler is properly installed so that NO FLUE GASES can enter the building at any time. Flue pipes should be safely sealed into the wall to prevent flue gases re-entering room or building
Refer also to page 16.

PREPARING BOILER FOR CONVENTIONAL CHIMNEY/FLUE OPERATION

Before installing boiler in the above mode please ensure:

A. That chimney flue is cleaned, draughting adequately, lined if necessary and not subject to downdraughts. **It is emphasised that boiler and flue should be connected properly in a manner which will not allow flue gases to enter room or building at any time from any part of the installation.**

B. That adequate unrestricted air for combustion and ventilation is provided to room in which boiler is situated - see diagram pg.20 & 21.

C. That there is no extractor fan capable of causing negative pressure in boiler room resulting in burner malfunction and flue gases being drawn back into boiler room.

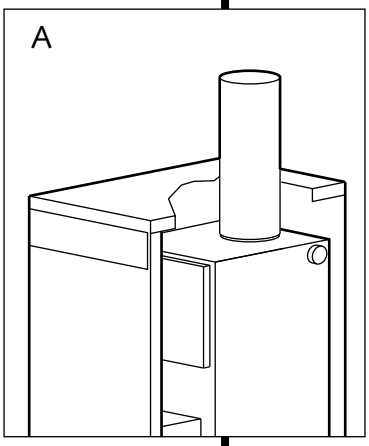

Conventional Flue Installations-

1. Remove blanking plate from top panel by pulling backwards.

2. Fit trim sleeve to flue pipe (if supplied).

3. Slide upwards and 'park' it out of the way

4. Fit flue pipe into boiler socket and properly seal with high temperature silicone mastic or non-cracking fire cement.

5. Fit white enamel top panel

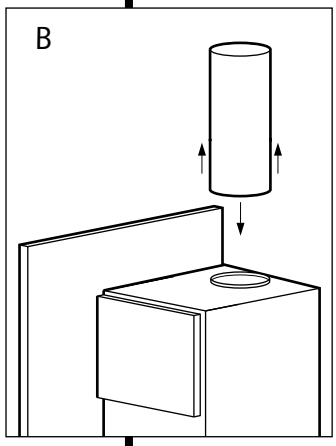

6. Fit cut-out cover plate behind flue pipe (shown in diagram)

7. Slide trim sleeve down against top panel (If Supplied)

ENSURE UNRESTRICTED AIR-SUPPLY TO BOILER ROOM. No further adjustments are required for adequate combustion-air supply. Check burner operation when installation is completed, use burner **Combustion Analyser** to ensure correct performance.
Consult separate burner manual supplied with boiler.

FIREBIRD

6-B Balanced Flue System

IMPORTANT: THE INSTALLER MUST EXAMINE THIS ILLUSTRATION CAREFULLY BEFORE PROCEEDING WITH INSTALLATION.

- **Firebird do not recommend the use of a low level flue's on white cased indoor boilers.**
- **The Firebird low level concentric flue kit has been specifically designed for Firebird's indoor boilers. The use of third party low level flue kits is not recommended and may affect its warranty.**

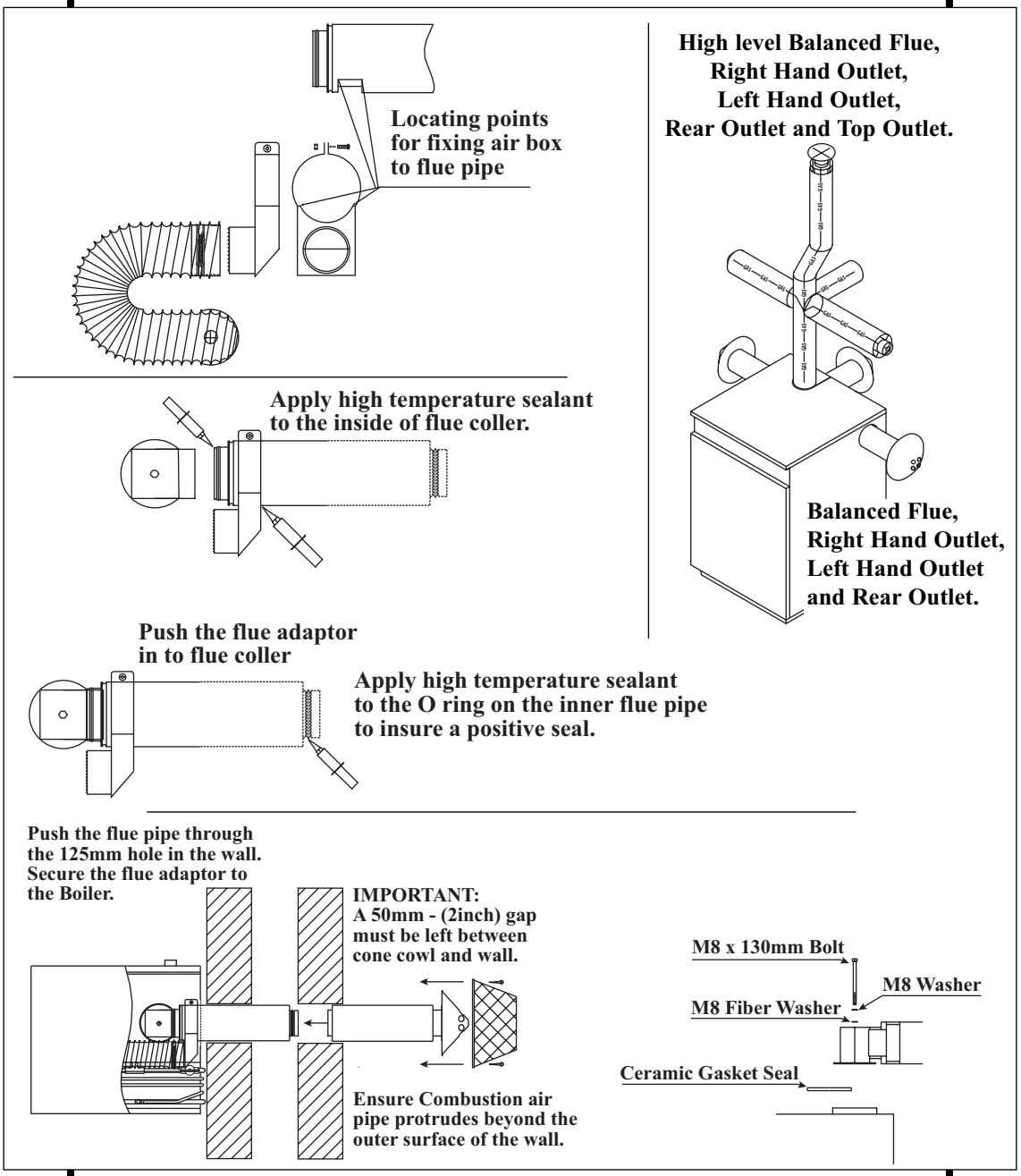

ENSURE UNRESTRICTED AIR-SUPPLY TO BOILER ROOM. No further adjustments are required for adequate combustion-air supply. Check burner operation when installation is completed, use burner **Combustion Analyser** to ensure correct performance.
Consult separate burner manual supplied with boiler.

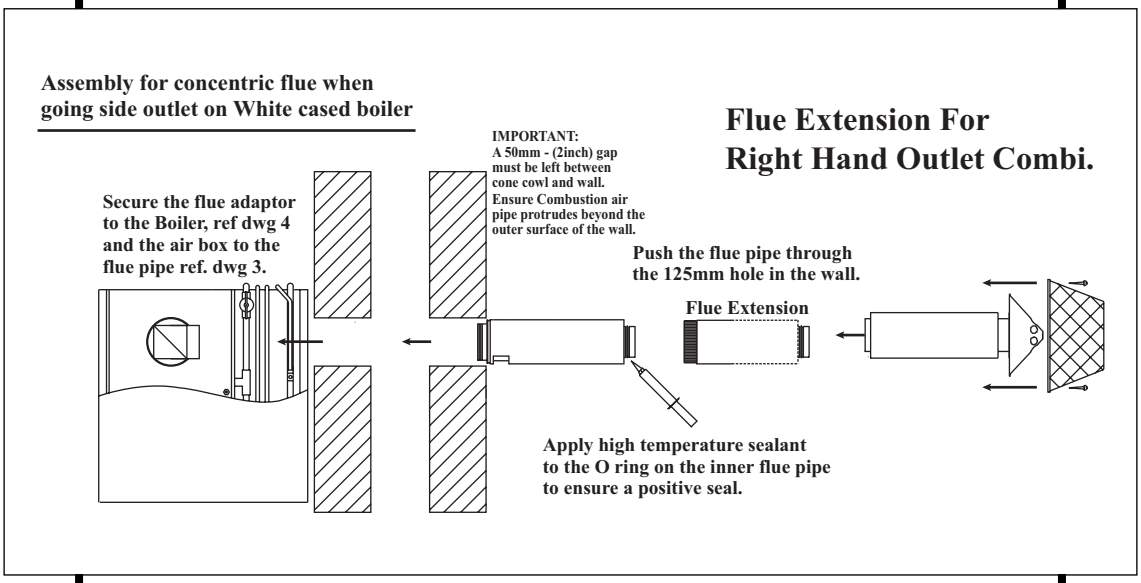

6-C Concentric Flue System

5" (125mm) O.D. Concentric flue Firebird S 70,000 - 90,000 and 120,000 btu's Boilers.

6" (150mm) O.D. Concentric flue Firebird S 150,000 btu's Boilers.

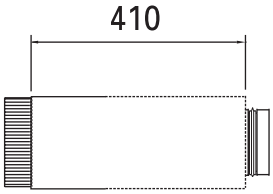

Flue Extension

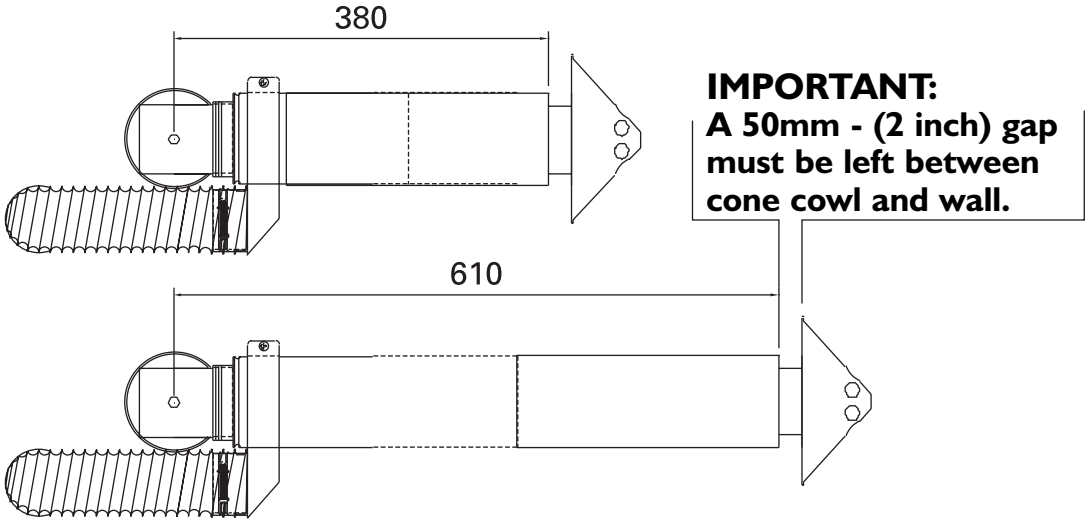

IMPORTANT:
A 50mm - (2 inch) gap must be left between cone cowl and wall.

INSTALLATION INSTRUCTIONS SUPPLIED WITH FLUE KITS

FIREBIRD

7 COMMISSIONING

Note: Commissioning must be carried out by a OFTEC qualified service engineer. (U.K. Only)

It should be noted that it is the responsibility of the installer to ensure that the boiler is properly commissioned. Failure to do so may invalidate the boiler guarantee and any extended warranty.

7-A Procedures

1. Oil Tank

The installation of the oil tank and supply line should comply with all the instructions shown earlier in this manual. Consult OFTEC Manual - Book No. 3, Section 2.

If a single supply line is used ensure that the bottom of the tank is above the burner. A two pipe system should be used where the level of the oil in the tank may fall below the level of the oil burner pump.

Check and ensure correct grade fuel oil has been supplied.

2. The Burner

A Tigerloop single pipe system may also be used in low-level tank installations. See page 21 Section 5. Please flush out oil pipe by drawing off some oil **before** connecting fuel pipe to burner - otherwise there is a danger of grit and dirt being forced into the burner pump, resulting in pump blockage, damage and 'lock-out'

3. The Boiler

A. Switch off the power supply, ensure that the boiler and system is full of water, all valves are open and that installation conforms with all Standards, Regulations and Instructions.

B. **Check that boiler baffles are correctly positioned**.

C. Check the oil supply by disconnecting the oil supply hose at the burner and running off a quantity to ensure it is free from air. then bleed air from burner pump. Refer to section 2, page 7, sketch C, Item-E.

D. If fitted, check that the time switch is 'ON' and that both room and boiler thermostats are calling for heat.

E. Reconnect electrical supply and the boiler should start. If the burner lock-out activates, this suggests air in the pump. Wait a minute or so and try again. If lock-out occurs again, air must be bled from the pump pressure gauge connection point once more.

F. View the burner flame through the sight glass - it should be bright cream/yellow without any sign of smoke.

G. Run the boiler for about fifteen minutes then take a CO_2 reading and adjust as necessary.

7-B Handing Over

A thorough check of the system should be made, then the householder should receive a clear and concise demonstration of the boiler operation and any system controls.

This manual and burner manufacturers manual plus any other instructions should be handed over to the user, the guarantee card should be completed and posted, and the user advised about the importance of annual servicing.
Commissioning Record - Page 54 - should be completed and a copy kept in engineers file.

8 SERVICING

Note: Servicing must be carried out by a OFTEC qualified engineer. (U.K. Only)

8-A Recommended Service Intervals

28 second oil	Once annually
35 second oil	Once annually

Ensure that 35 secs fuel oil is only used where allowed by regulations. Burner should then be re-set for this fuel. Before carrying out a service it is recommended that the following is checked:

A). Smoke

B). CO_2

C). The flue gas temperature

D). Oil pressure

E). Ensure flue is unrestricted & operating properly

At the same time check for oil and combustion leaks. Advance to service **ONLY** after ensuring that both electric and oil supply to boiler is disconnected.

8-B The Oil Tank

Draw off any accumulated water and sludge from the tank by opening the drain cock. Turn off the oil supply and remove the filter bowl, then wash the element clean with kerosene.

8-C The Boiler

Remove combustion access door for access to baffles and to clean heat exchanger.

Check insulation sealing and its silver foil lining in combustion access door - replacing when necessary. When refitting this door be careful not to damage the foil and insulation by over tightening.

8-D The Burner

Check performance of oil-nozzle and replace as necessary.

Ensure correct specification replacement nozzle is used.

Check all oil filters and replace as necessary.

Remove burner and clean blast tube and ensure that airways are clear.

Ensure electrodes are clean, dry, not broken and are set as per burner specifications.

Clean fan and photocell.

Once again check flexible oil lines and connections for damage or leaks, replace as necessary.

Combustion Check

Carry out combustion analysis and ensure that boiler is performing to specification outlined in manual. Flue conditions may cause deviation from these figures.

Always keep careful record of flue gas analysis results including any verbal and written advice to customer (householder). Always check carefully for restricted or blocked flue. If possible record CO levels and advise customer of need to keep boiler room well ventilated.

Fault Finding Logic For Control Box Type 530 SE R40 Series Oil Burners

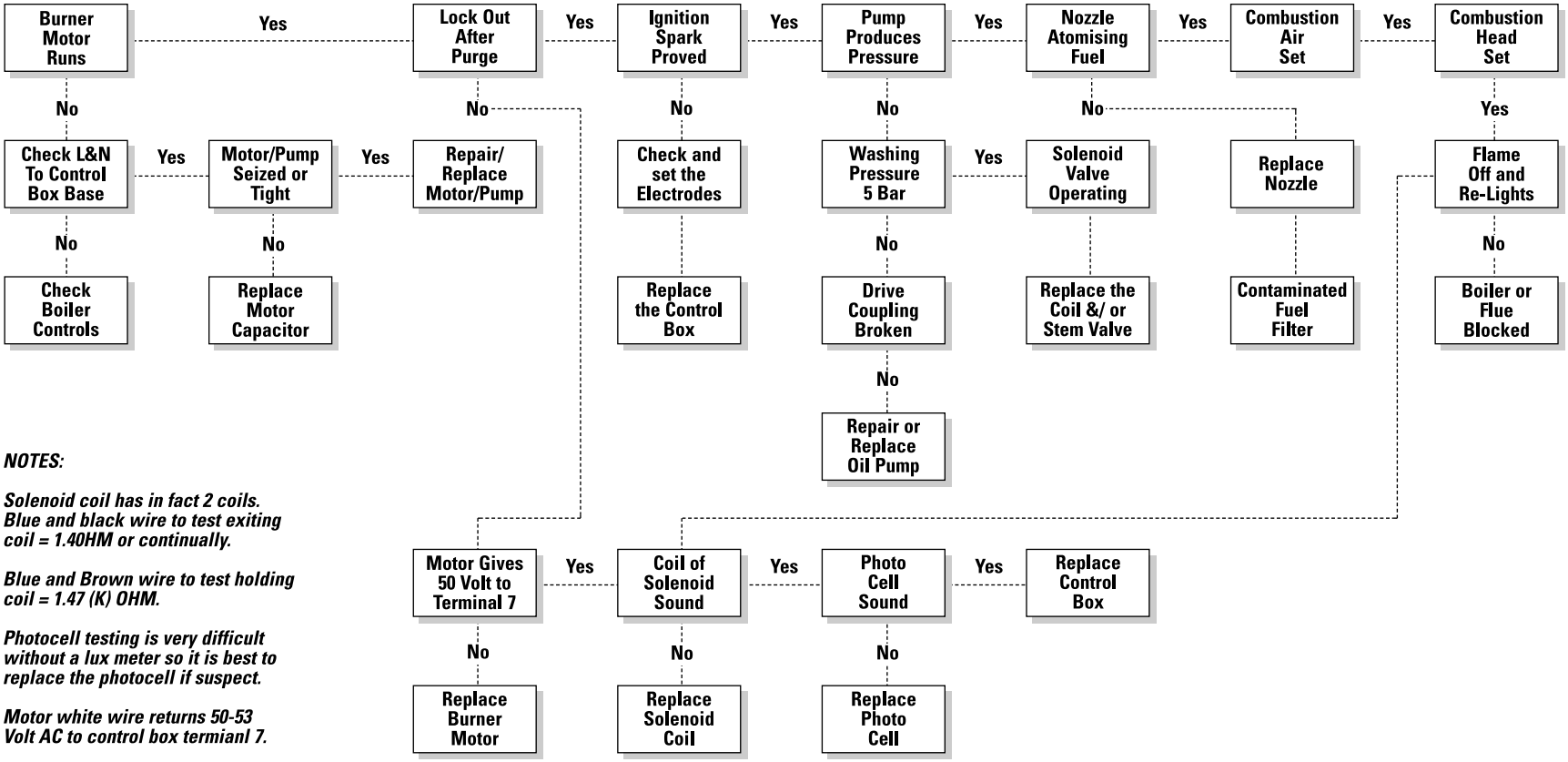

NOTES:

Solenoid coil has in fact 2 coils. Blue and black wire to test exiting coil = 1.40HM or continually.

Blue and Brown wire to test holding coil = 1.47 (K) OHM.

Photocell testing is very difficult without a lux meter so it is best to replace the photocell if suspect.

Motor white wire returns 50-53 Volt AC to control box termianl 7.

Fault Finding Logic For Control Box Type 5352 SE/LD RDB Series Oil Burners

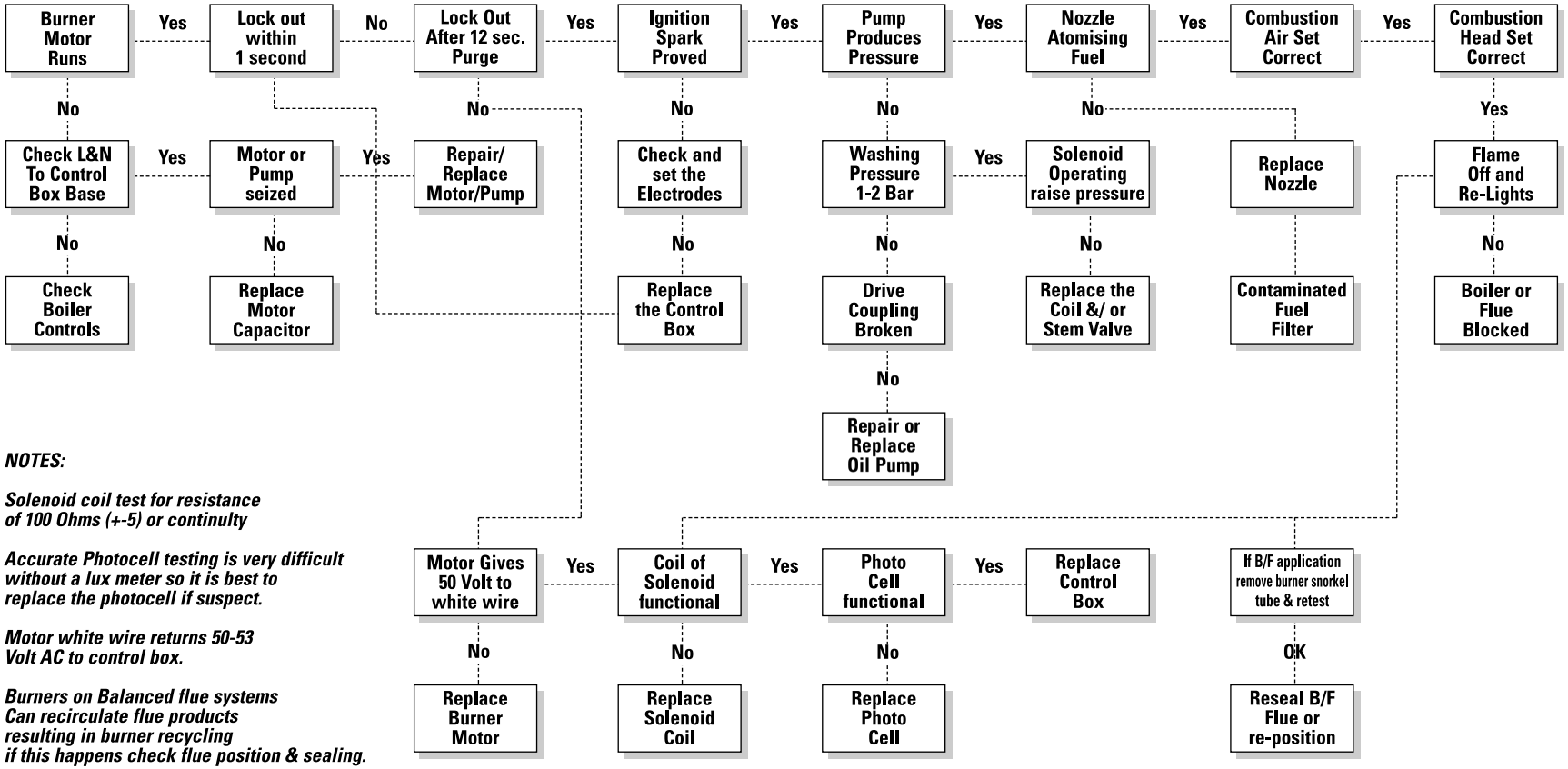

NOTES:

Solenoid coil test for resistance of 100 Ohms (+-5) or continulty

Accurate Photocell testing is very difficult without a lux meter so it is best to replace the photocell if suspect.

Motor white wire returns 50-53 Volt AC to control box.

Burners on Balanced flue systems Can recirculate flue products resulting in burner recycling if this happens check flue position & sealing.

System

Oil Boiler

PART 2

Sealed System

DOMESTIC HEATING

Sealed Heating Circuit

The system must comply with BS 7074 Part 1 and BS 5449 Part 1 with a maximum water temperature of 80˚C.

* A manual reset overheat limit thermostat is located next to the temperature control dial on the electrical control panel (see page 10). If a boiler overheat condition arises the burner will stop and remain inoperative until this thermostat reset button is depressed.

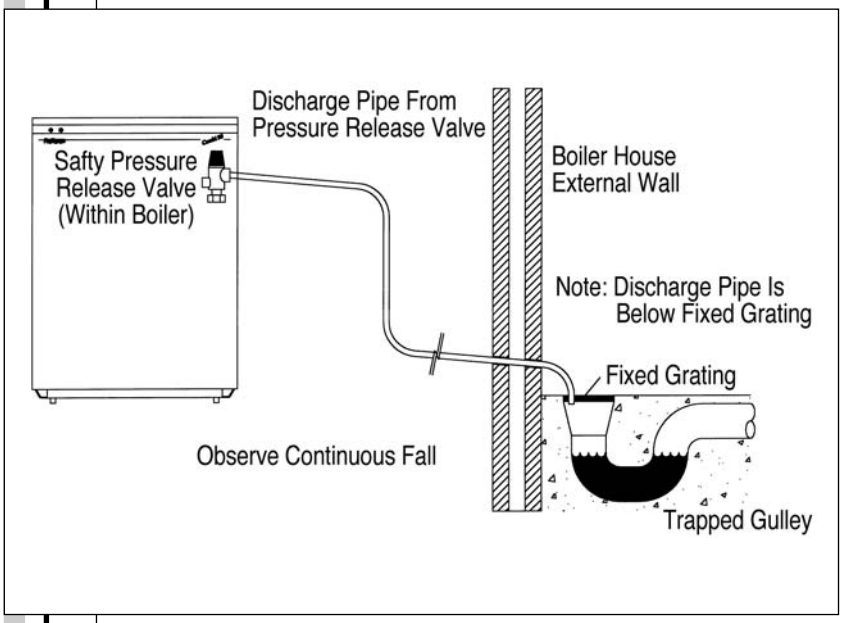

* A pressure relief valve to BS 6759 operating at 3 bar (45 lb/in^2) is fitted. A discharge pipe of 15 mm diameter is also fitted to the discharge connection on the pressure relief valve. During installation an extension pipe should be fitted to this, leading, to outside the building. The pipe should be as short as possible and may need a tundish fitted in a protected position within the building.
Alternatively, if acceptable, it may discharge within building. In this case the discharge pipe **outlet end**, should terminate within 100 mm above inside floor level, and be in a visible and accessible position. No tundish is necessary in this position and householder should be advised that this discharge end should always remain open. In every case it should be directed downwards away from any electrical components or where it could cause a hazard to the user/occupier. See diagram above.

Note:- Water must not discharge above an entrance, window or where public have access. The installer must be aware that the discharge may be boiling water.

* A drain cock must be fitted at the lowest points in the system to enable draining as necessary. A drain cock is already fitted at the bottom of the boiler heat store to enable draining of boiler and tank unit only. All pipes connected to boiler should have shut off valves fitted to facilitate this.

* A Pressure gauge, having range 0 to 6 bar is fitted to boiler control panel. This indicates water pressure in boiler and system at time of reading. **Pressure when cold should** be 1 bar minimum to 1.5 bar maximum. This is known as Initial System Design Pressure (P_i).

A manually adjustable red pointer is also fitted on the protective glass of pressure gauge. This has a screwdriver slot. When system is cold and filled to Initial Fill Pressure P_i this pointer should be rotated to **read exactly as black pointer** on dial. This should not be subsequently altered. If system pressure, as indicated on black pointer on dial, falls **below** that indicated by red pointer when system and boiler are cold this means that Initial System Fill Pressure has dropped. Refill system until indicated pressure rises to the same as red pointer indicates - in this case 0.7 bar, as shown on accompanying pressure gauge sketch. Sketch also shows black pointer indicating maximum final system design pressure (P_f).

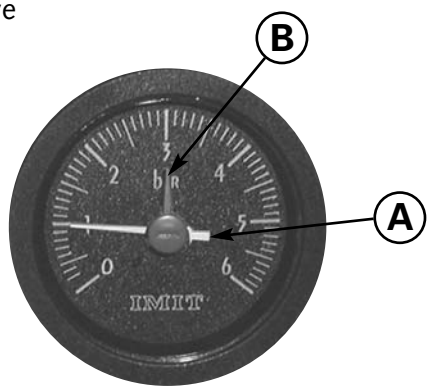

N.B. **Initial System Design Pressure (measured in bar) equals static head of system (measured in bar) plus 0.3.**

* A 12 or 14 litre expansion vessel is fitted to boiler, precharged with air or nitrogen to **1 bar** which allows a system static head of 5 metres. If the static head is greater than this then the air charge in the vessel must be increased to balance the higher static head. **The air charge should not exceed a pressure of 1.5 bar.**

The Firebird Combi Boiler's **with built in Expansion Vessel's** having an initial air charge pressure of 1 bar. If total water content of system is greater than the capibilities of the vessel supplied **then an additional vessel** will be required to be fitted to the **return** pipe as close as is practicable to the boiler. There should be no valves or restrictions between vessel and boiler.
See page 34 for vessel sizes.

If static head is altered then it is also necessary to alter air charge pressure to equal static head (+ 0.3 Bar). This is necessary in order to keep system water from entering expansion vessel until system is being heated and thus allow its maximum acceptance volume (V) to be used **only to accommodate the expansion of system water during boiler operation.**

Remember that air charge pressure **must** be **equal** in both vessels (attached to the same system). In the above example this is 1 bar. **Air charge pressure** is the air pressure in expansion vessel **before** system is filled. It is measured with a tyre gauge attached to Schrader valve on the vessel.

N.B. N.B. With heating system up to full working temperature, if the final system design pressure (P_f) reads more than 2.6 bar, as indicated on control panel pressure gauge, then it is likely that:

(a) **Total** system water content is greater than that calculated and if additional expansion vessel has been fitted it should be replaced with a larger unit
OR if integral boiler expansion vessel only is used then an additional expansion vessel is required.

(b) Static head may be higher than calculated. In this case it is necessary to re-measure static head and revise expansion vessel air charge pressure.

(C) Expansion vessel incorrect size or air charge pressure incorrect.

Refer to BS 7074 Part 1 and BS 5449 for further information.

DOMESTIC HEATING

EXPANSION VESSEL AND SYSTEM REQUIREMENTS

Safety Valve Setting	3 bar		
Initial System Pressure	0.5 bar	1.0 bar	1.5 bar
Total Water Content of System	TOTAL VESSEL VOLUME **		
Litres	Litres	Litres	Litres
25	2.1	2.7	3.9
50	4.2	5.4	7.8
75	6.3	8.2	11.7
100	8.3	10.9	15.6
125	10.4	13.6	19.5
150	12.5	**->[16.3]<-**	23.4
175	14.7	19.1	27.2
200	16.7	21.8	31.2
225	18.7	24.5	35.1
250	20.8	27.2	39.0

FOR FURTHER INFORMATION CONSULT APPROPRIATE TRAINING MANUALS AND BS 7074 PART 1, BS 5449, ETC

*** * When calculating size of any additional expansion vessel required, remember to deduct the boiler expansion vessel volume of 10 litres from the calculated total system vessel volume required, as given in above table.**

EXAMPLE: using above table

If .....Total water content of system - 150 litres
And .....Initial system pressure required is - 1.0 bar
Then .....Vessel volume required [from above table] - 16.3 litres
But .....Vessel supplied with boiler - 10.0 litres
Therefore ....Additional vessel required - 6.3 litres (minimum)
(For this system of 150 litres - total water volume)

..Nearest available stock size for additional vessel required, at 1 bar initial system pressure (taken from above table) is 8 Litres.

It is emphasised that the installer should be fully acquainted with sealed system installation and operation, calculation of total system water volume, determining of initial system pressure required and calculation of any additional expansion vessel volume required.

NB .. Ensue that all expansion vessels in the same system are set at EQUAL air charge pressures.

SYSTEM FILLING, TESTING AND MAKE-UP

Heating Circuit

This is the Radiator Heating System including boiler which is filled from mains supply via flex filling loop Part No. 4 (Page 38) within boiler to a pressure determined from system static head, expansion vessel size and system water volume.This flexible filling loop should be disconnected when boiler and system are filled and checked, See diagrams below.

System filling should take place **slowly** and can be done by either of the following methods:-

Manual Filling

The Firebird System 90 comes with this system built into the appliance. It consists of a flexible hose connection with a butterfly shut off valve at each end and a double check valve assembly at mains end. To conform to the Water Supply (Water Fittings) Regulations 1999 and the Water Byelaws 2000 (Scotland) and local water Authority Bye Laws, the flexible hose should be disconnected at one end when filling has been completed and checked. Two end caps are supplied and should be fitted to disconnected ends as a safety precaution against inadvertent opening of ball valves.

Pressure gauge on Control Panel should be checked occasionally when system is cold. Refill to initial fill pressure if necessary. Should this be a frequent occurrence, complete system should be checked for leaks.

Method A

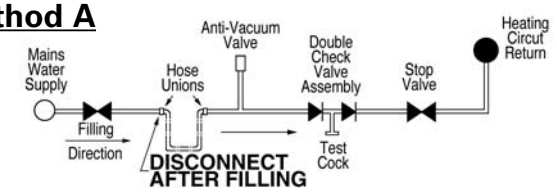

Automatic Filling

Automatic System filling may be made with a feed and make-up cistern connected through a double check valve and stop valve assembly to the return side of the heating system as close to the boiler as is practicable. This cistern **should be located above** the heating systems highest point to give a **minimum** static head of 300 mm between it (highest point) and cistern. The manual filling system fitted to boiler should then be disconnected and connection points blanked off.

This system has the advantage of automatic water make-up in the event of system pressure loss due to air elimination and minor leaks. In any case control panel pressure gauge should be occasionally checked. **Remember also to check air fill pressure of Expansion Vessel when system is cold using standard tyre gauge connected to Schrader air valve on vessel.**

Method B

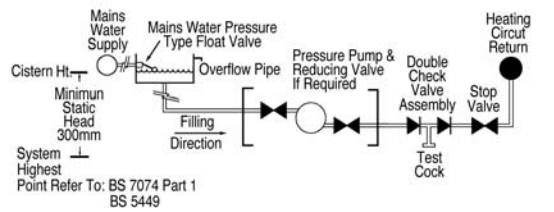

NOTE: **There shall be no direct connection to the mains, even with the use of a non-return valve without the permission of Local Water Authority.**

* It is recommended that an inhibitor be added at the time of final fill to protect the System from corrosion. Ensure that this is carried out in accordance with inhibitor manufacturers instructions. Installer should ensure that inhibitor used is suitable and that it will have no adverse effect on Expansion Vessels diaphragms or any other part or component of the system.

SYSTEM FILLING, TESTING AND COMMISSIONING

*** Before proceeding to filling, ensure that electricity supply is switched off at mains to avoid any possibility of time switch operating and passing power to appliance prior to filling.**

Filling and Testing

Check that **all** connections, especially compression joints, are fully tightened. Re-check and ensure that pressure vessel air charge is correct, then fill system with water via filling system used. **Turn off water supply before system pressure reaches safety valve operation point of 3 bar**. (Say 2 to 2.5 bar). Vent system via all manual air vents **including circulating pumps**, boiler, radiators, system high points. etc. Check that dust caps are loosened on auto air vents, keep constant check on system pressure gauge (fitted to control panel). If pressure has dropped readmit water to above pressure. Ensure **all** appropriate boiler and system valves **are open**.

With water supply turned off, **thoroughly** flush out boiler and system to remove **all** foreign matter before allowing boiler and pumps to operate. If in doubt drain system and repeat above procedure. At this stage flushing-out water should be clean and clear of all foreign matter.

Refill the system and again vent at all points as described above. Examine the complete system for water leaks having pressurised it to 1.5 - 2.5 bar. Correct any leaks, then check operation of safety valve by admitting further water until this valve operates. This should occur when system pressure rises to between 2.7 and 3.3 bar. When satisfied with valve operation, and with mains water still turned off, draw off sufficient water until initial system design fill pressure (P_i). (cold fill) is established (0.5 - 1.5 bar - as calculated for system). The red pointer B on pressure gauge should then be set at this initial system design pressure (P_i), i.e. system static head +0.3

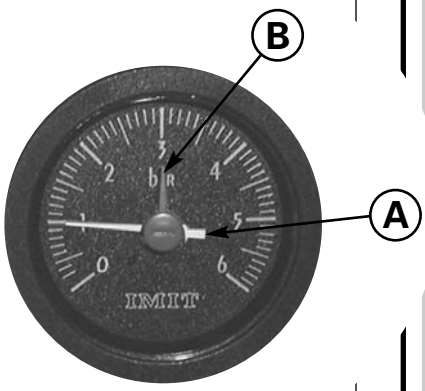

Remember that initial cold fill pressure can only be checked when system water has properly cooled down. Check that **final operating pressure** (P_f) is under 2.5 bar with **all** radiators turned on and up to highest working temperature. Should system operating pressure exceed this, check:

1. That initial cold fill pressure is correct and , if additional expansion vessel is fitted, that pressure is equal in each vessel,
2. That expansion vessels are sized correctly.

Special attention should be given to existing heating systems where Firebird Combi boiler has replaced an existing unit. Extra effort should be made to ensure that all original pipe work and radiators are repeatedly flushed. If possible use a proprietary cleansing agent suitable for system as loosened scale and foreign matter can seriously reduce domestic hot water performance and pump efficiency.

Use corrosion inhibitor of suitable type.

System

Oil Boiler

PART 3

Spare Parts

10-A Burner Parts Illustration

Riello RDB Burner

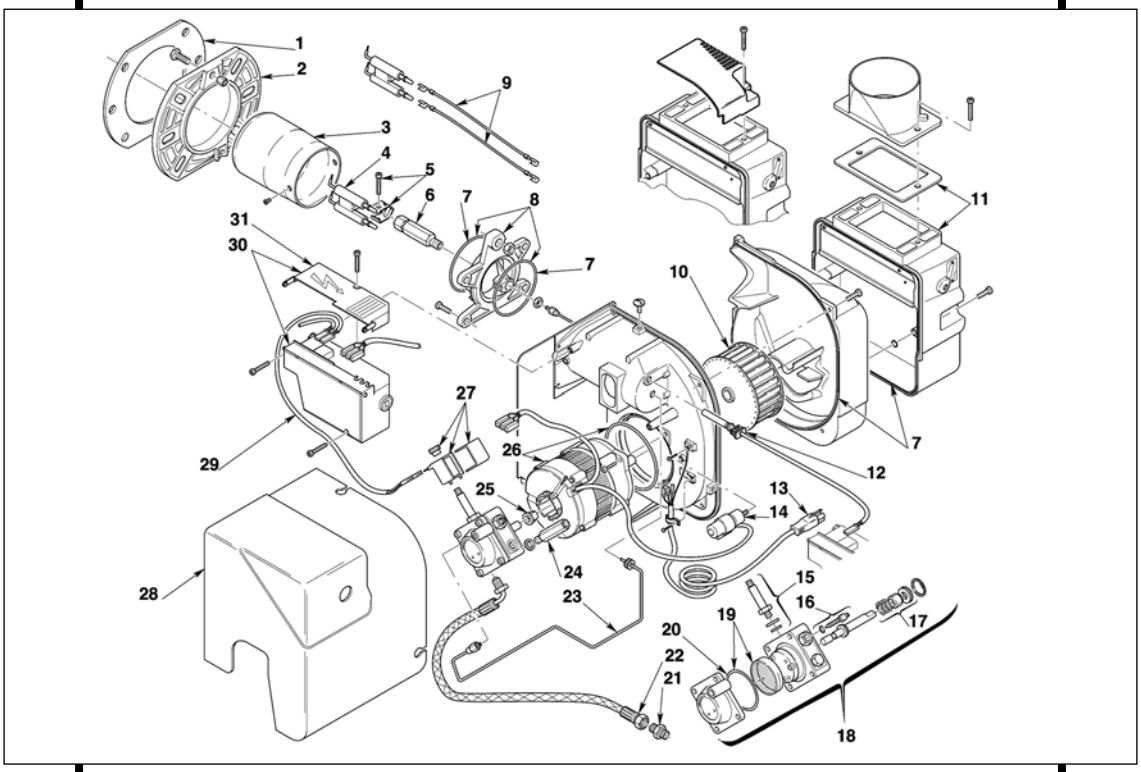

Riello RDB Burner Parts

No.	Code Spare Parts	Description
1	3008512	Gasket
2	3006384	Flange
3	3002433	Cup-Shaped Head
3	3002447	Cup-Shaped Head
4	3007513	Electrode Assembly
5	3006552	Electrode Bracket
6	3008642	Nozzle Holder
7	3008878	Kit Seals
8	3008643	Collar
9	3008794	High Voltage Lead
10	3005708	Fan
10	3008645	Fan
11	3008647	Air Damper Assembly
11	3008839	Air Damper Assembly
12	3008646	P.E. Cell
13	3008863	Lead
14	3007479	Capacitor 4uf
15	3007582	Needle Valve
16	3008651	Regulator
17	3000439	Pump Seal
18	3008654	Pump
19	3008653	Filter - O - Ring
20	3007162	O - Ring
21	3009068	Connector
22	3007672	Flexible Oil Line
23	3008644	Tube
24	3008876	Pressure Gauge
25	3000443	Joint
26	3008650	Motor
27	3008648	Coil
28	3008879	Cover
29	3008851	Lead Coil
30	3008652	Control Box 535RSE/LD
31	3008649	Projection

10-B Burner Parts Illustration

Riello Burner R40 Series

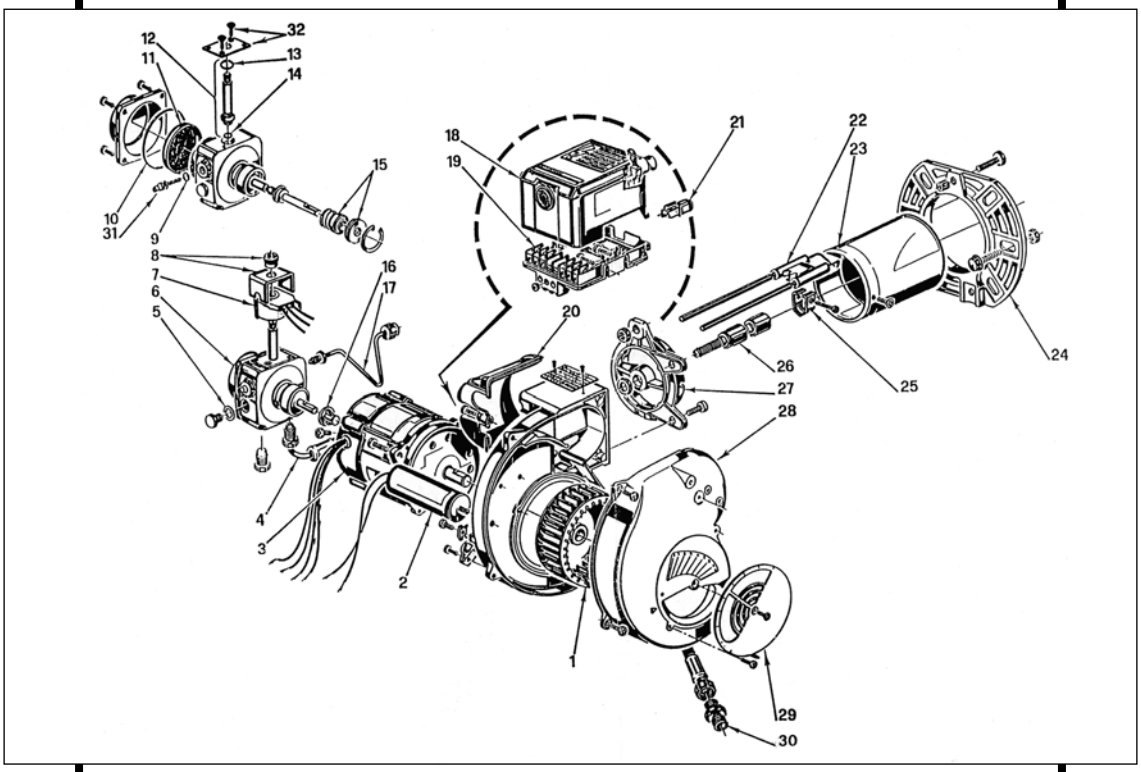

Riello Burner Parts

No.	Code Spare Parts	Description
1	3005708	Fan
2	3005798	Capacitor 4μF
3	3007355	Motor 240V - 50Hz
4	3006934	Flexible oil line
5	3007077	Seal
6	3007450	Pump
7	3002279	Coil
8	3006553	Shell
9	3007028	O-Ring
10	3007162	O-Ring
11	3005719	Filter
12	3006925	Valve
13	3007028	O-Ring
14	3007156	O-Ring
15	3000439	Pump seal
16	3000443	Joint
17	3005723	Tube
18	3001156	Control box 530SE*
19	3002278	Control box base
20	3006554	Cover
21	3002280	Photoresistance
22	3005721	Electrode assembly
23	3006001	Cup-shaped head
24	3005786	Flange
25	3006552	Electrode bracket
26	3005724	Nozzle holder
27	3005760	Collar
28	3007207	Air intake
29	3007204	Air damper
30	3009046	Connector
31	3007202	Regulator
32	3007203	Plate

10-C System Pluming Parts Illustration

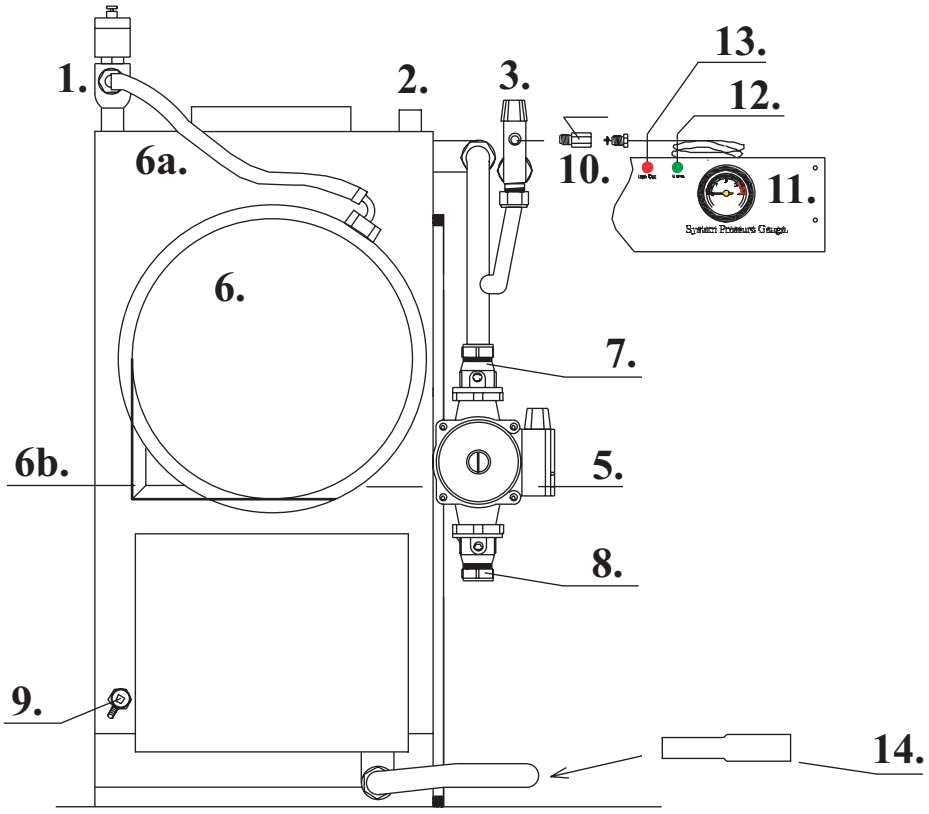

System Boiler (Elevation)

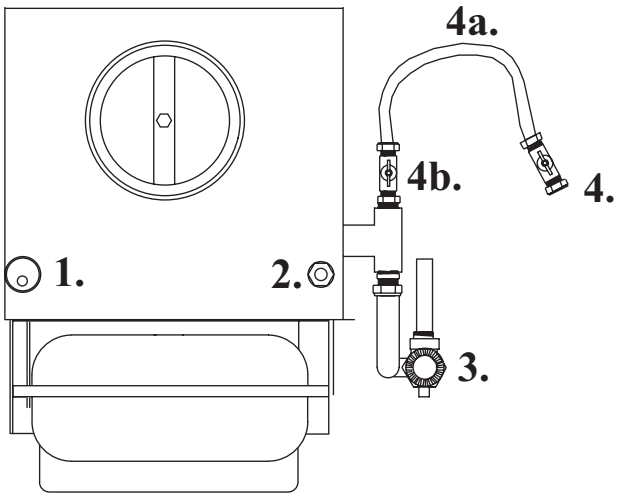

System Boiler (Plan)

10-D System Pluming Parts Description

ITEM No.	COMPONENT	50-70	70-90	90-120	PART No.
1	Automatic air vent	1	1	1	FC 03010
2	Thermostat Pocket	1	1	1	FC 03020
2a	Filler Spring	1	1	1	FC 03020a
2b	Locking Spring	1	1	1	FC 03020b
3	Safety Valve	1	1	1	FC 03040
4	Filling loop isolating valve	1	1	1	FC 03100
4a	Filling loop hose	1	1	1	
4b	Filling loop check valve	1	1	1	
5	Circulating Pump	1	1	1	FC 03102
6	10 Ltr. Pressure Vessel 50/70	1			FC 0306070
	12Ltr. Pressure Vessel 70/90		1		FC 0306090
	14 Ltr. Pressure Vessel 90/120			1	FC 0306012
7	Pump Valve 22mm	2	2	1	FC 03101
8	Pump Valve 28mm			1	FC 0310128
9	1/2"drain cock	1	1	1	FC 03103
10	1/4 M/Fm Check Valve	1	1	1	FC 03040CV
11	Pressure Gauge	1	1	1	FC 03134
11a	Pressure Gauge Bracket	1	1	1	FC 03135
11b	Pressure Gauge Nut	1	1	1	FC03136
12	Green Neon Light Indicator	1	1	1	FC03138
13	Red Neon Light Indicator	1	1	1	FC 03140
14	22mm to 28mm Copper			1	FC 032228

10-E Parts Illustration

Firebird System Range 50/70 - 70/90

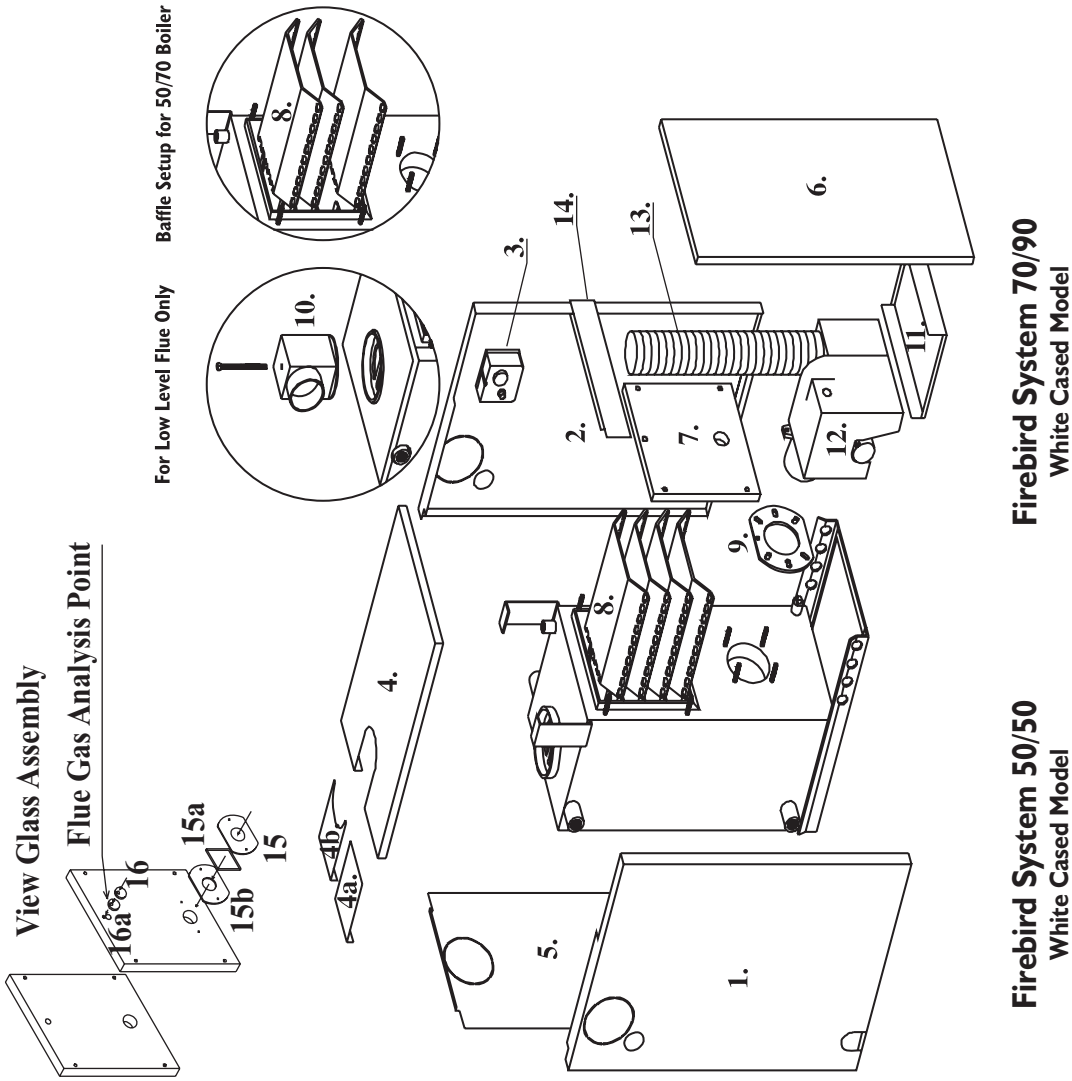

10-F Parts Description

Firebird System Range 50/70 - 70/90

ITEM No.	COMPONENT	PART No.	Qty per boiler
Firebird System Range 50/70 White Cased Model			
1	Side Panel L H Side	FC03118L	1
2	Side Panel R H Side	FC03118R	1
3	Dual Stat	IM TLSC 542764	1
4	Top Panel	SS03121R	1
4a	Flue Trim Plate	FC03122	1
4b	Conventional Trim Plate	FC03123	1
6	Front Panel	SS03120	1
7	Baffle Door - Door (3)	FC0310890	1
8	Baffles (Gas Baffle)	FS90 - R-09	4
9	Burner Mounting Flange	R.D.B. 3006384	1
10	Flue Elbow	FS90 - L-30	1
11	Drip Tray	FS90 - L-31	1
12	Burner	RDB 1 70190 (3513200)	1
13	Snorkel	3"snorkel pipe & jubilee clip	1
14	Instrument Panel	SS70 - LS-L-46	1
15	Viewing glass bracket	FC 03110	1
15a	Viewing glass	FC 03111	1
15b	Viewing glass gasket	P70-L-45	1
16	Flue gas analysis cover	FC 03113	1
16a	Flue gas analysis cover gasket	FC 03114	1
Firebird System Range 70/90 White Cased Model			
1	Side Panel L H Side	FC03118L	1
2	Side Panel R H Side	FC03118R	1
3	Dual Stat	IM TLSC 542764	1
4	Top Panel	SS03121R	1
4a	Flue Trim Plate	FC03122	1
4b	Conventional Trim Plate	FC03123	1
6	Front Panel	SS03120	1
7	Baffle Door - Door (3)	FC0310890	1
8	Baffles (Gas Baffle)	FS90 - R-09	4
9	Burner Mounting Flange	R.D.B. 3006384	1
10	Flue Elbow	FS90 - L-30	1
11	Drip Tray	FS90 - L-31	1
12	Burner	RDB 1 70190 (3513200)	1
13	Snorkel	3"snorkel pipe & jubilee clip	1
14	Instrument Panel	SS70 - LS-L-46	1
15	Viewing glass bracket	FC 03110	1
15a	Viewing glass	FC 03111	1
15b	Viewing glass gasket	P70-L-45	1
16	Flue gas analysis cover	FC 03113	1
16a	Flue gas analysis cover gasket	FC 03114	1

10-G Parts Illustration

Firebird System Range 90/120 - 120/150 White Cased Model

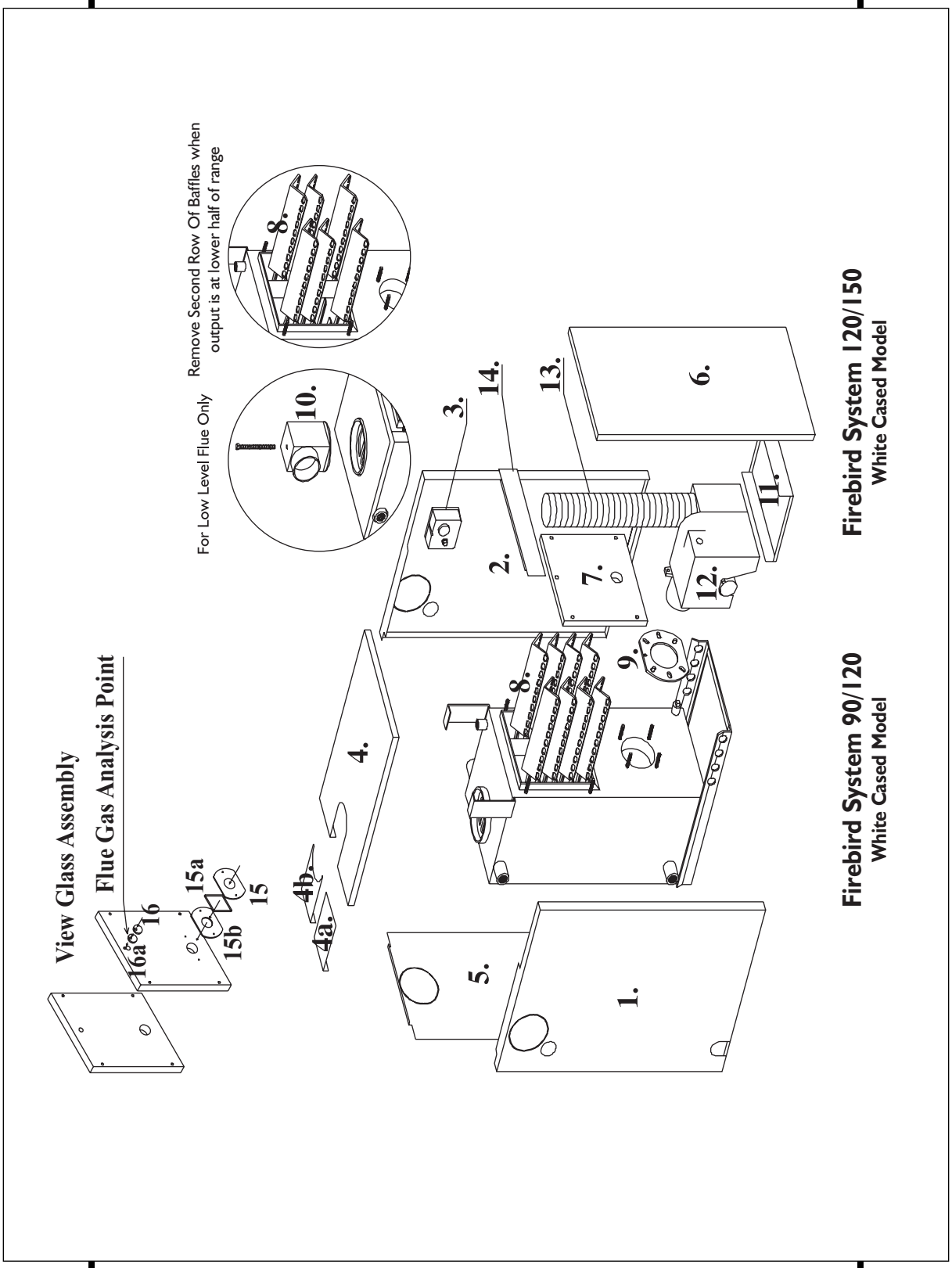

10-H Parts Description

Firebird System Range 90/120 - 120/150 White Cased Model

ITEM No.	COMPONENT	PART No.	Qty per boiler
Firebird System Range 90/120 White Cased Model			
1	Side Panel L H Side	FC03118L	1
2	Side Panel R H Side	FC03118R	1
3	Dual Stat	IM TLSC 542764	1
4	Top Panel	SS0312112	1
4a	Flue Trim Plate	FC03122	1
4b	Conventional Trim Plate	FC03123	1
5	Back Panel	FS125 - BP-L-04	1
6	Front Panel	SS0312012	1
7	Baffle Door	FS125 - L-08	1
8	Baffles	FS125 - L-09	8
9	Burner Mounting Flange	See Burner Parts Book	1
10	Flue Elbow	FS125 - L-30	1
11	Drip Tray	FS125 - L-31	1
12	Burner	RDB 2 (3513602)	1
13	Snorkel	3"snorkel pipe & jubilee clip	1
14	Instrument Panel	FS125 - LS-L-46	1
15	Viewing glass bracket	FC 03110	1
15a	Viewing glass	FC 03111	1
15b	Viewing glass gasket	P70-L-45	1
16	Flue gas analysis cover	FC 03113	1
16a	Flue gas analysis cover gasket	FC 03114	1
Firebird System Range 120/150 White Cased Model			
1	Side Panel L H Side	SS150 - LH-L-01	1
2	Side Panel R H Side	SS150 - RH-L-02	1
3	Dual Stat	IM TLSC 542764	1
4	Top Panel	SS150 - TP-L-03	1
4a	Flue Trim Plate	SS150 - FTP-L-03	1
4b	Conventional Trim Plate	SS150 -CTGP-L-03	1
5	Back Panel	SS150 - BP-L-04	1
6	Front Panel	SS150 - FP-L-05	1
7	Baffle Door	FS150 - L-08	1
8	Baffles	FS150 - L-09	8
9	Burner Mounting Flange	See Burner Parts Book	1
10	Flue Elbow	FS150 - L-30	1
11	Drip Tray	FS150 - L-31	1
12	Burner	RDB 3	1
13	Snorkel	3"snorkel pipe & jubilee clip	1
14	Instrument Panel	FS150 - LS-L-46	1
15	Viewing glass bracket	FC 03110	1
15a	Viewing glass	FC 03111	1
15b	Viewing glass gasket	P70-L-45	1

10-I Parts Illustration

System Heat PAC 70

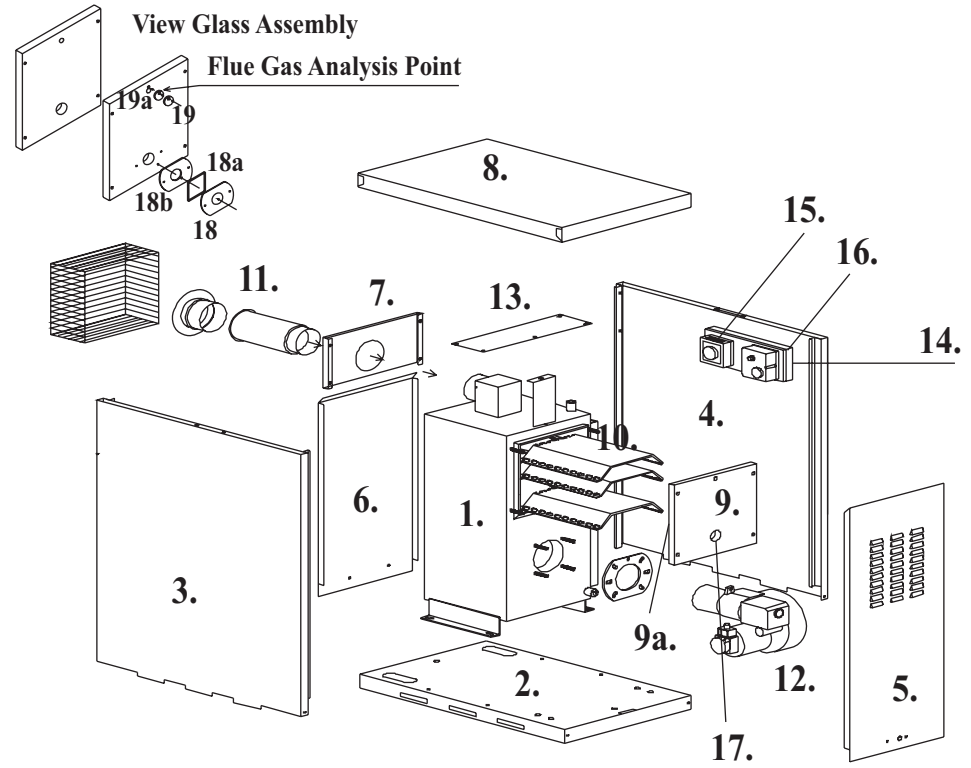

System Heat-Pac 70

10-I Parts Description

ITEM No.	COMPONENT	PART No.	Qty per boiler
1	Boiler	HP70-L	1
2	Base	HP70-L-101	1
3	Left side	HP70-L-102	1
4	Right side	HP70-L-102	1
5	Front	HP70-L-103	1
6	Back	HP70-L-104	1
7	Back flue outlet	HP70-L-106	1
8	Top	HP70-L-105	1
9	Boiler Door	P70-L-08	1
9a	Door Gasket	P70-L-41	1
10	Baffles	P90-L-09	3
11	Flue Kit	HP70-L-14-3	1
12	Burner	Riello G5X	1
13	Support Plate	HP70-L-107	1
14	Thermostat	IM TLSC542764	1
15	Frost stat.	TLM 2257	1
16	Stat Mounting Bracket	HP70-L-54	1
17	View glass		
18	Viewing glass bracket	FC 03110	1
18a	Viewing glass	FC 03111	1
18b	Viewing glass gasket	P70-L-45	1
19	Flue gas analysis cover	FC 03113	1
19a	Flue gas analysis cover gasket	FC 03114	1

10-J Parts Illustration

System Heat PAC 70/90

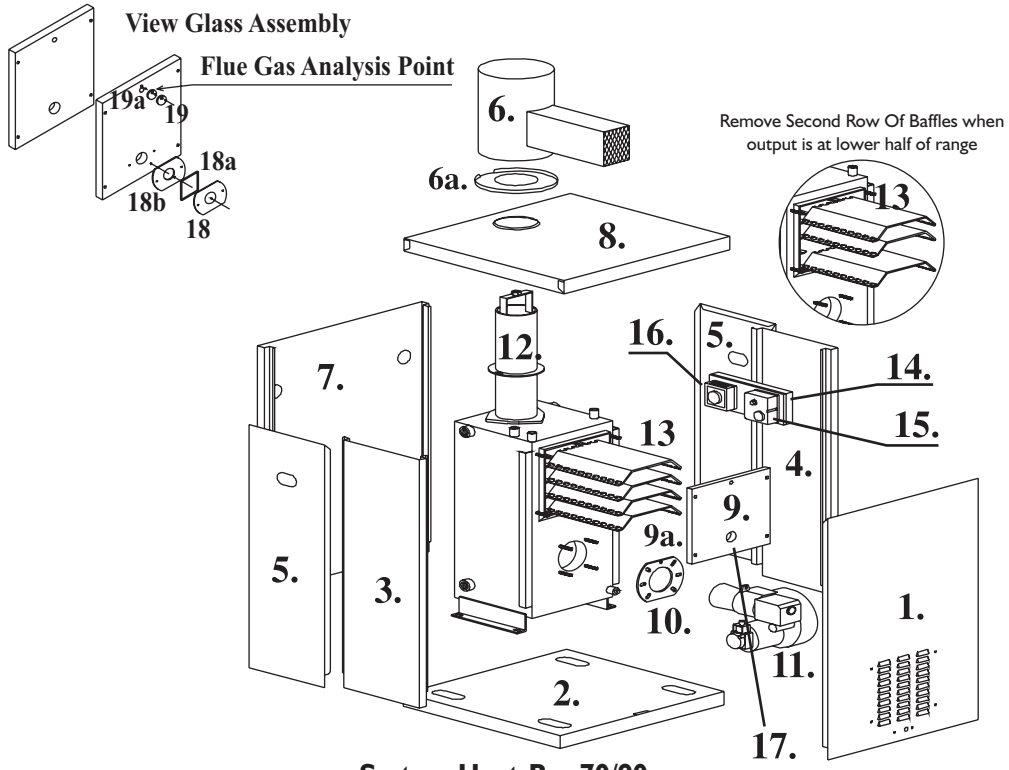

System Heat-Pac 70/90

10-J Parts Description

ITEM No.	COMPONENT	PART No.	Qty per boiler
1	Front	HP90-103	1
2	Base	HP90-101	1
3	Left fixed side	HP90-107	1
4	Right fixed side	HP90-108	1
5	R-L Service side	HP90-109/110	2
6	Flue	MF14-5BK	1
6a	Flue drip tray		1
7	Back	HP90-104	1
8	Top	HP90-105	1
9	Boiler Door	P70-L-08	1
9a	Door Gasket	P70-L41	1
10	Burner flange	See Burner Parts Book	1
11	Burner	G5X T3 Riello	1
12	Flue Chimney	HP120-208	1
13	Baffle	P90-L-09	8
14	Electrical Box	P70-L-48	1
15	Thermostat	IM TLSC542764	1
16	Frost stat.	TLM 2257	1
17	View glass		
18	Viewing glass bracket	FC 03110	1
18a	Viewing glass	FC 03111	1
18b	Viewing glass gasket	P70-L-45	1
19	Flue gas analysis cover	FC 03113	1
19a	Flue gas analysis cover gasket	FC 03114	1

10-K Parts Illustration

System Heat PAC 90/120 - 120/150

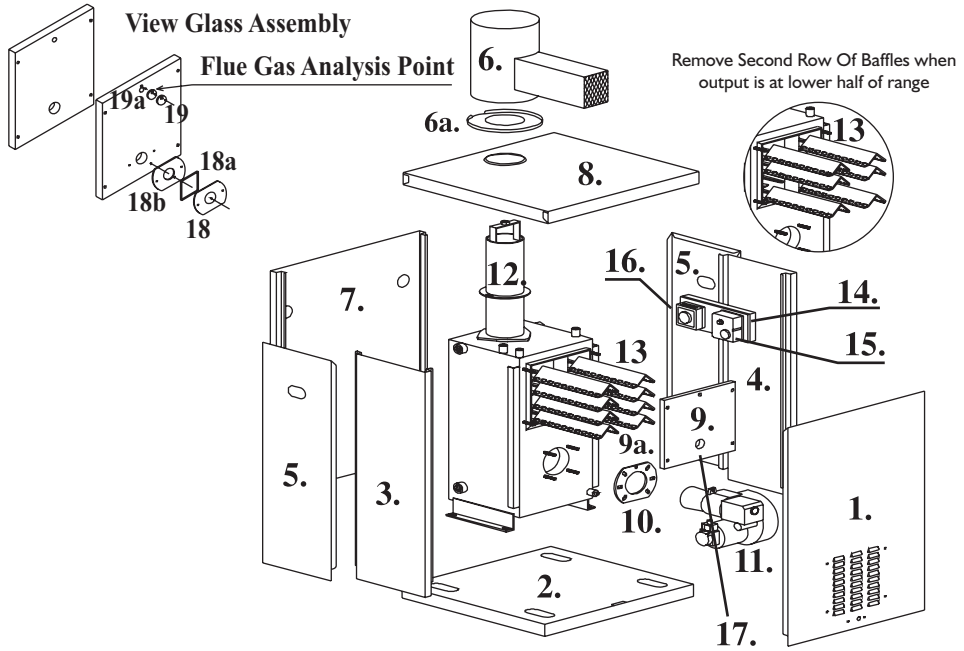

System Heat-Pac 90/120 **System Heat-Pac 120/150**

10-K Parts Description

ITEM No.	COMPONENT	PART No.	Qty per boiler
	System Heat Pac 120		
1	Front	HP120-103	1
2	Base	HP120-101	1
3	Left fixed side	HP120-107	1
4	Right fixed side	HP120-108	1
5	R-L Service side	HP120-109/110	2
6	Flue	MF14-5BK	1
6a	Flue drip tray		1
7	Back	HP120-104	1
8	Top	HP120-105	1
9	Boiler Door	P120-L-08	1
9a	Door Gasket	P120-L41	1
10	Burner flange	See Burner Parts Book	1
11	Burner	Riello G5X LD35	1
12	Flue Chimney	HP120-208	1
13	Baffle	P120-L-09	8
14	Electrical Box	P70-L-48	1
15	Thermostat	IM TLSC542764	1
16	Frost stat.	TLM 2257	1
17	View glass	90/120 only	
18	Viewing glass bracket	FC 03110	1
18a	Viewing glass	FC 03111	1
18b	Viewing glass gasket	P70-L-45	1
19	Flue gas analysis cover	FC 03113 (Not on Heat Pac 150)	1
19a	Flue gas analysis cover gasket	FC 03114 (Not on Heat Pac 150)	1
	System Heat Pac 150		

For Heat Pac 150 replace part numbers 1,2,3,4,5,7,8,9 and 13 above with HP150/P150 e.g. HP120-103 changes to HP150-103 / P120-L-08 changes to P150-L-08.
Burne Model for Heat Pac 150 is the Riello G7.

Commissioning Record

This record should be carefully completed, remain in this manual and be left with householder. A copy should be kept on file by engineer

Date: _____

Commissioning Engineer:-

Name: _____ Tel. No: _____

Address: _____

_____

Boiler:-

Type _____ Output: _____

Fuel Used: Kerosene (28 sec) or Gas oil (35 sec)

Burner:-

Nozzle size: _____ Nozzle Type: _____

Pump Pressure: _____ Air Setting: _____

Flue Gas % CO_2: _____ Net Flue gas temp: _____

Smoke No: _____

Sealed system design pressure (cold): _____

Sealed system final operating pressure (P_f) : _____

Commissioning Engineer Signature: _____

Notes & Comments

FIREBIRD

Service Report

NB All Information recorded hereunder should also be included in Engineers own filed service reports. It is recommended that the boiler be serviced, ***at least once a year***, and the details recorded below. Combi Boilers may need more frequent service. Engineer should advise householder.

Date	% CO_2	Net Flue gas temp	Smoke No.	Nozzle	Service Engineer/Tel. No. Signature & Comments
				Type ..... Size ..... Angle ..... Pressure	Signature:.....
				Type ..... Size ..... Angle ..... Pressure	Signature:.....
				Type ..... Size ..... Angle ..... Pressure	Signature:.....
				Type ..... Size ..... Angle ..... Pressure	Signature:.....
				Type ..... Size ..... Angle ..... Pressure	Signature:.....
				Type ..... Size ..... Angle ..... Pressure	Signature:.....
				Type ..... Size ..... Angle ..... Pressure	Signature:.....
				Type ..... Size ..... Angle ..... Pressure	Signature:.....

Service Report

NB All Information recorded hereunder should also be included in Engineers own filed service reports. It is recommended that the boiler be serviced, ***at least once a year***, and the details recorded below. Combi Boilers may need more frequent service. Engineer should advise householder.

Date	% CO_2	Net Flue gas temp	Smoke No.	Nozzle	Service Engineer/Tel. No. Signature & Comments
				Type ..... Size ..... Angle ..... Pressure	Signature:.....
				Type ..... Size ..... Angle ..... Pressure	Signature:.....
				Type ..... Size ..... Angle ..... Pressure	Signature:.....
				Type ..... Size ..... Angle ..... Pressure	Signature:.....
				Type ..... Size ..... Angle ..... Pressure	Signature:.....
				Type ..... Size ..... Angle ..... Pressure	Signature:.....
				Type ..... Size ..... Angle ..... Pressure	Signature:.....
				Type ..... Size ..... Angle ..... Pressure	Signature:.....

NOTES

NOTES

NOTES

For further information on Firebird Products
please contact

FIREBIRD UK
Unit 6, Westover Industrial Estate, Ivybridge, Devon PL 21 9 ES.
Tel: [+44] 01 752 691177 Fax: [+44] 01 752 691131

FIREBIRD BOILERS
Ballymakeera, Co. Cork.
Tel: [+353] 026 45253 Fax: [+353] 026 45309

FIREBIRD PRODUCTS
Shean, Forkhill, Newry. BT35 9SY.
Tel: [+44] 028 30888330 Fax: [+44] 028 30889096

Int. Access Codes: Eg. N.I. +44 28 30888330

Revision 2 © 18 7 2003

© Copyright applies to all FIREBIRD products. Our policy is one of continual development and we therefore reserve the right to change without prior notice the specification of our products at any time and be without obligation to make similar changes in products previously produced.