Firebird®
Central to Heating

Envirogreen™

System Boiler Range
System, Systempac & Slimline Systempac Models

Installation Manual

SUPERIOR HEATING SOLUTIONS
SINCE 1980

CONTENTS

FOREWORD

We would like to thank you for purchasing a high efficiency Firebird condensing liquid fuel boiler with an Elco low Nox burner. This instruction manual is produced for the reference and guidance of qualified installation engineers, preferably OFTEC (Oil Firing Technical Association) registered. EU legislation governs the manufacture, operation and efficiency of all domestic central heating oil boilers. Our boilers and burners are supplied as matched units.

PAGE

1. SAFETY 2

2. STANDARDS & REGULATIONS 3
- 2.1 Condensate Disposal 4
- 2.2 Flue Regulations 7
- 2.3 Flue Systems 10
- 2.4 Liquid Fuel Supply 11

3. SYSTEM BOILER
- 3.1 Householder/End User Information 12
- 3.2 Installer Guidelines 14
- 3.3 Technical Details 19

4. SYSTEMPAC
- 4.1 Householder/End User Information 22
- 4.2 Installer Guidelines 23
- 4.3 Technical Details 27

5. SLIMLINE SYSTEMPAC
- 5.1 Householder/End User Information 30
- 5.2 Installer Guidelines 31
- 5.3 Technical Details 34

6. COMMISSIONING 37

7. SERVICING 38

8. TERMS & CONDITIONS OF WARRANTY 39

9. PRODUCT FICHE 40

HEALTH & SAFETY INFORMATION

The installer should be aware of his/her responsibilities under the current, local Health and Safety at Work Act. The interests of safety are best served if the boiler is installed and commissioned by a competent, qualified engineer, preferably OFTEC trained and registered. A Building Notice may be required in England and Wales and other parts of the United Kingdom.

Under the Consumer Protection Act 1987 (UK), section 6 of the Health and Safety Act 1974 (UK) and the Safety, Health and Welfare at Work Act 2005 (ROI), we are required to provide information on substances hazardous to health.

INSULATION AND SEALS
Ceramic Fibre, Alumino - Silicone Fibre material are used for boards, ropes and gaskets. Known hazards are that people may suffer reddening and itching of the skin. Fibre entering the eye will cause foreign body irritation. It may also cause irritation to the respiratory tract.

Precautions should be taken by people with a history of skin complaints or who may be particularly susceptible to irritation. High dust levels are only likely to arise following harsh abrasion. Suitable personal protective equipment should be worn where appropriate.

Generally, normal handling and use will not give discomfort. Follow good hygiene practices, wash hands before consuming food, drink or using the toilet.

First Aid - medical attention should be sought following eye contact or prolonged reddening of the skin.

The small quantities of adhesives and sealants used in the product are cured. They present no known hazards when used in the manner for which they are intended.

THIS PRODUCT HAS BEEN DESIGNED TO THE FOLLOWING STANDARDS:

This equipment complies with the Low Voltage Directive 2014/35/EU and Directive 2014/30/EU.

EMC - conformity was demonstrated by meeting the following standards:

BS EN 55014-2: 2015: Electromagnetic Compatibility - Requirements for Household Appliances, Electric Tools and Similar Apparatus - Part 1: Emission

BS EN 55014-1: 2017: Electromagnetic Compatibility - Requirements for Household Appliances, Electric Tools and Similar Apparatus - Part 2: Immunity - Product Family Standard

BS EN 61000-3-2: 2014: Electromagnetic Compatibility (EMC) Part 3-2: Limits - Limits for Harmonic Current Emissions (equipment input current <16 A per phase)

BS EN 61000-3-3: 2013: Electromagnetic Compatibility (EMC) Part 3-3: Limits - Limitation of Voltage Changes, Voltage Fluctuations and Flicker in Public Low-voltage Supply Systems (equipment with rated current <16 A per phase and not subject to conditional connection)

Safety - conformity was demonstrated by meeting the following standards:

EN60335-1: 2012 + A13: 2017: Household and Similar Electrical Appliances - Safety - Part 1: General Requirements

EN60335-2-102: 2006 + A2: 2016: Household and Similar Electrical Appliances - Safety - Part 2-102: Particular Requirements for Gas, Oil and Solid-fuel Burning Appliances having Electrical Connections

SAFETY

Safe use of Kerosene. These fuels give off a flammable vapour when heated moderately. Vapour ignites easily, burns intensely and may cause explosion. The vapour can follow along at ground level for considerable distances from open containers and spillages collecting as an explosive mixture in drains, cellars, etc.

Fuels remove natural oils and fats from the skin and this may cause irritation and cracking of skin. Barrier cream containing lanolin is highly recommended together with good personal hygiene and where necessary appropriate persona protection equipment (P.P.E.).

Gas oil may also cause irreversible damage to health on prolonged or repeated skin contact.

Always store fuels in a properly constructed and labelled tank. Always handle fuel in open air or well ventilated space away from sources of ignition and refrain from smoking.

Always drain fuel using a proper fuel retriever, funnel or mechanical siphon. Never apply heat to a fuel tank, container or pipework. Never siphon fuel through tube by mouth.

Avoid inhaling fuel vapour as this can cause light headedness and seriously impair judgement.

FUEL SPILLAGE

1. Switch off all electrical and other ignition sources.
2. Remove all contaminated clothing to safeguard against fire risk and skin damage. Wash affected skin thoroughly with soap and water and remove clothing to a safe well ventilated area and allow to air before cleaning.
3. Contain and smother the spill using sand or other suitable oil absorbent media or non-combustible material.
4. Do not allow fuel to escape into drains or water courses. If this happens, contact the relevant authorities in your area.
5. Consult local authority about disposal of contaminated soil.

FIRST AID

If fuel is accidentally swallowed:
* Seek medical attention immediately.
Do NOT induce vomiting.
If fuel is splashed into eyes:
* Wash out with running water for at least ten minutes and seek medical attention.

2 STANDARDS & REGULATIONS

To ensure the highest standards of installation & safety, it is important that the boiler be installed in compliance with the following regulations where applicable. It is the responsibility of the installer and everyone concerned with any aspect of installation, to ensure that all applicable standards and regulations are fully adhered to.

The following is a list of some of the applicable standards and regulations. Please always check for the most up to date version.

All relevant building standards and regulations for Ireland, England, Scotland, Wales and Northern Ireland.

BS 5410-1: 2014	Code of practice for oil firing. Installations up to 45kW output capacity for space heating and hot water supply purposes.
BS 5410-2:2018	Code of practice for liquid fuel firing. Non-domestic installations.
BS 799-5: 2010	Oil burning equipment. Carbon steel oil storage tanks. Specification.
BS EN 303-1: 2017	Heating boilers. Heating boilers with forced draught burners. Terminology, general requirements, testing and marking.
BS EN 12828: 2012 + A1: 2014	Heating systems in buildings. Design for water based heating systems.
BS 7074-1: 1989	Application, selection and installation of expansion vessels and ancillary equipment for sealed water systems. Code of practice for domestic heating and hot water supply.
BS 7593: 2006	Code of practice for treatment of water in domestic hot water central heating systems.
BS EN 13502: 2002	Chimneys. Requirements and test methods for clay/ceramic flue terminals.
BS EN 1856-1: 2009	Chimneys. Requirements for metal chimneys. System chimney products.
BS 8558: 2015	Guide to the design, installation, testing and maintenance of services supplying water for domestic use within buildings and their curtilages. Complementary guidance to BS EN 806.
BS 7671: 2018	Requirements for Electrical Installations. IET Wiring Regulations.
BS EN 304: 2017	Heating boilers. Test code for heating boilers for atomizing oil burners.

Regional water supply (water fittings) regulations/ byelaws.

Regional control of pollution (oil storage) regulations.

OFTEC also publish excellent guides including:

- OFTEC Technical Book One - Safe working for oil firing and delivery technicians.
- OFTEC Technical Book Two - Domestic & light commercial servicing and commissioning.
- OFTEC Technical Book Three - Domestic and commercial requirements for oil storage & supply equipment.
- OFTEC Technical Book Four - Oil fired appliance & system installation requirements.

COPIES OF BRITISH STANDARDS MAY BE PURCHASED DIRECT FROM:

BSI (Customer Services),
389 Chiswick High Rd., London W4 4AL.
Tel.: +44 (0)345 0869001
International and EC Standards are also available from above.

OFTEC PUBLICATIONS ARE AVAILABLE FROM:
OFTEC, Oil Firing Technical Association,
Foxwood House, Dobbs Lane,
Kesgrave, Ipswich, IP5 2QQ.
www.oftec.org

BOILER INSTALLATION:

Other than special considerations for condensate removal and plume dispersal, the installation of liquid fuel fired condensing boilers is the same as for non-condensing oil fired boilers.

BS 5410:1: 2014 gives the requirements for domestic boiler and liquid fuel storage installations.

If an appliance is to be installed inside a building or within a restricted area externally, a carbon monoxide detector alarm conforming to BS EN 50291-1: 2018 should be installed in accordance with the manufacturer's instructions.

For condensing boilers, the same requirements apply for installation with regard to cleaning and flushing and providing inhibitors, as are followed for any other boiler. Manufacturer's instructions must always be followed together with the requirements of BS EN 12828: 2012 + A1: 2014 & BS EN 12831-1: 2017 and the statutory requirements of the Building Regulations.

2 2.1 STANDARDS & REGULATIONS - CONDENSATE DISPOSAL

Firebird condensing boilers, when in condensing mode, extract more heat from the flue products and the resulting condensate which is mildly acidic, needs to be drained from the boiler via a condensate pipe to the drainage system.

Provision must be made for the removal of condensate from the boiler to an internal soil stack, waste pipe, external soil stack, gully or soak-away, as per BS 6798: 2014.

The condensate trap is provided with the boiler and situated on the front of the boiler (under the cleaning door). This should be checked at regular intervals and cleaned during annual service.

The condensate line should:
- be plastic and have a minimum diameter of 22mm dia.;
- have a fall from the boiler of 1:200 minimum;
- have as few bends as possible to reduce the risk of trapping condensate.

Copper or steel cannot be used.

CONDENSATE PIPEWORK THAT IS EXTERNAL OR IN AN UNHEATED GARAGE SHOULD NOT EXCEED 3 METERS AND SHOULD BE LAGGED WITH WATER PROOF INSULATION TO PREVENT FREEZING.

SYSTEM NO. 1 CONDENSATE TRAP

Always prime condensate trap with water.

Condensate baffle and condensate trap

Before switching on your Firebird condensing liquid fuel boiler check that:

(1) The condensate drain baffle is in place.
(2) That the condensate trap is primed.
(3) The condensate discharge pipe is a corrosion resistant pipe.

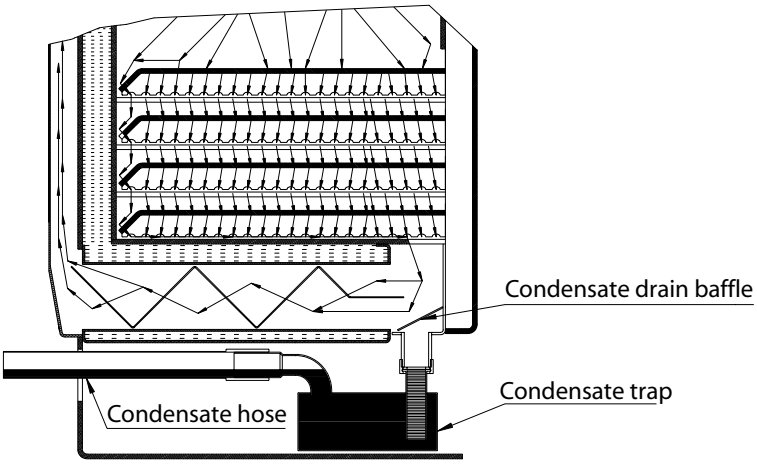

Figure 1

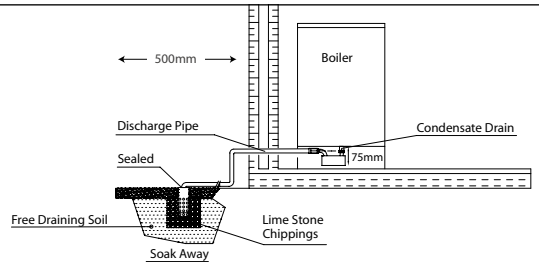

Figure 3

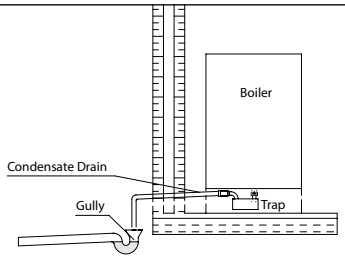

Figure 2

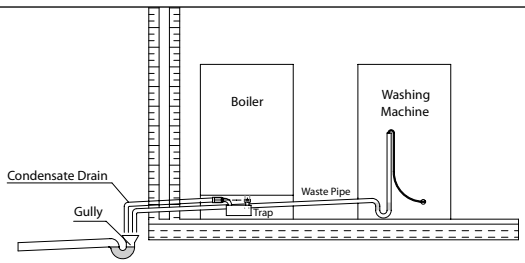

Figure 4

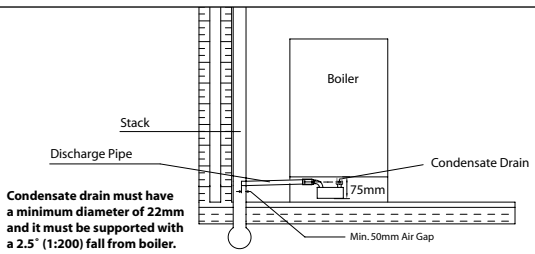

Ensure that the boiler combustion chamber cannot be filled through the condensate trap from another appliance (eg. washing machine) which is drained at a higher level (see Figure 2).

SYSTEM NO. 2

CONDENSATE PUMP

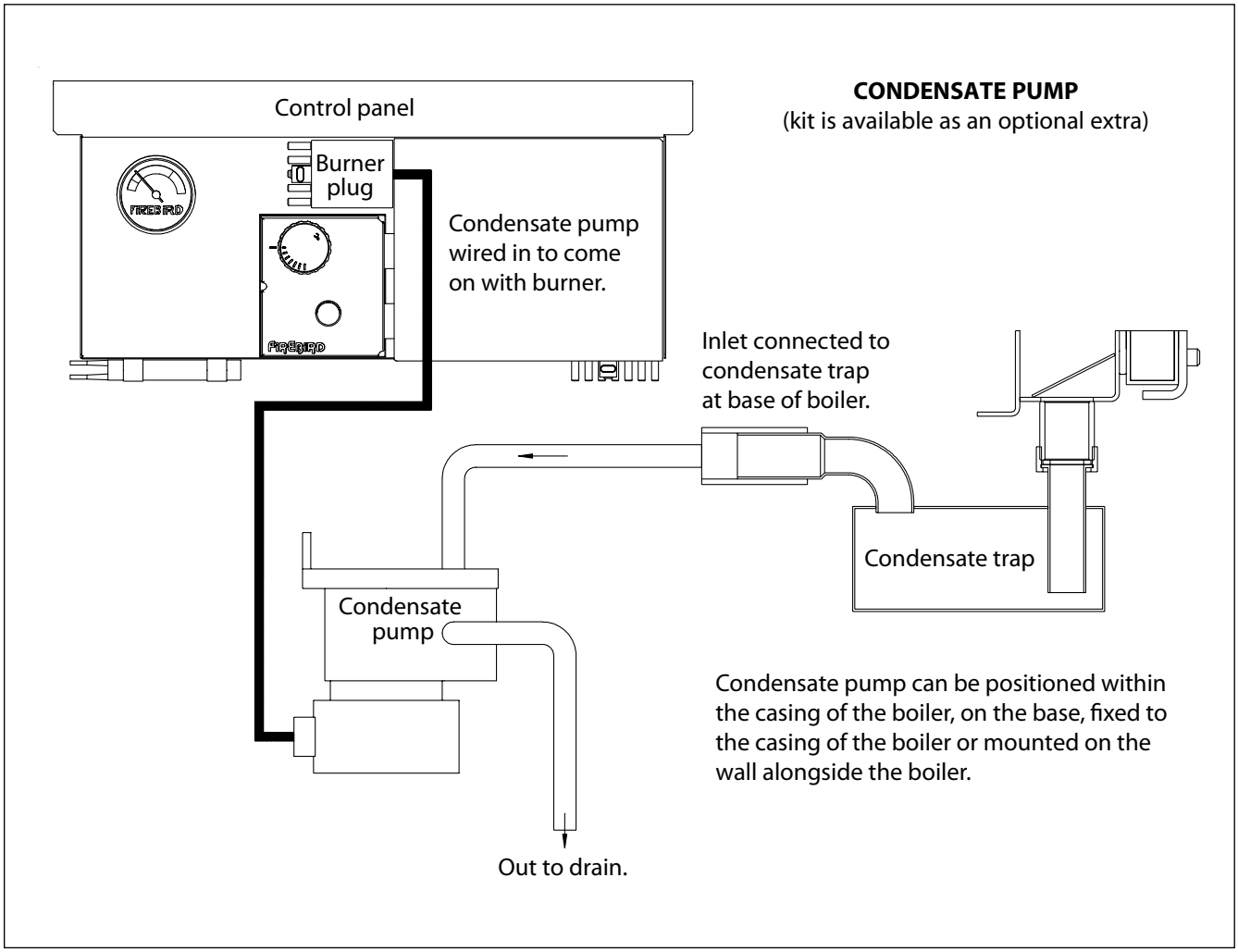

Condensate Trap Fitting

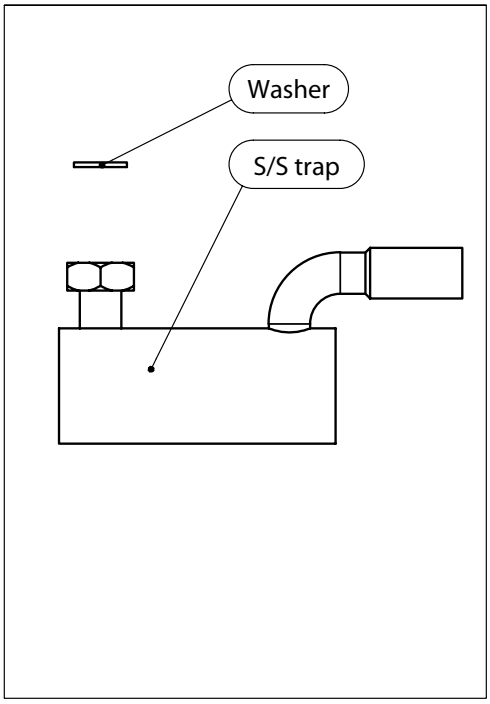

1. Push washer into trap socket and screw trap onto boiler socket.

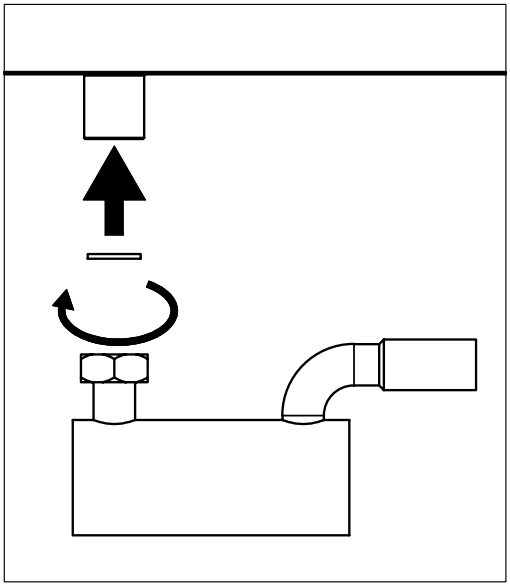

2. Push flexible pipe onto trap socket.

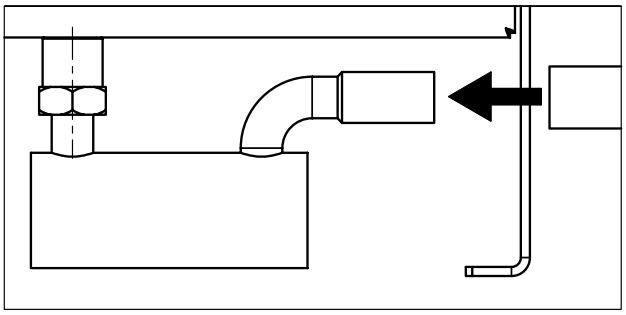

3. Final assembly.

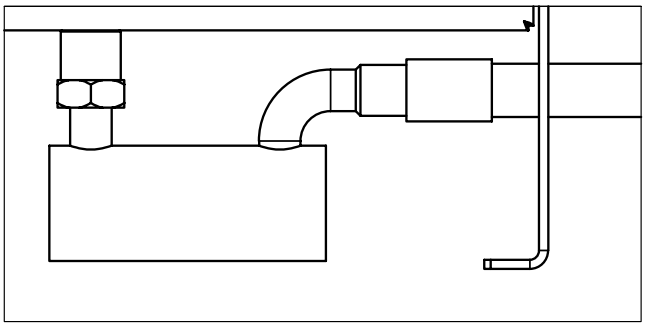

BALANCED FLUE SITING

The terminal should be positioned to avoid combustion products entering the building or accumulating in stagnant pockets around buildings. The terminal must be protected by a guard if it is less than 2 metres above ground level or in a position where any person has access to it (i.e. a balcony). A heat protection shield should be fitted if the terminal is less than 850mm from a plastic or painted gutter or less than 450mm from painted eaves. Prevailing winds should be taken into account when siting a flue.

ALWAYS CHECK FOR ANY BUILDING REGULATIONS AMENDMENTS WHICH MAY HAVE BEEN ISSUED AFTER THE PUBLICATION OF THIS MANUAL

Clearances advised by BS 5410-1: 2014

Regular Appliance (Open, Low Level Discharge and Balanced) Flue Termination Clearance

The basic requirement with regard to flue positioning is that no hazard or nuisance is caused by the flue gases. Diagrams 20a and 20b show clearances advised by BS 5410-1: 2014.

Regional requirements where flue clearances differ can be found in the regional requirements section in OFTEC Book Four.

Diagram 20a

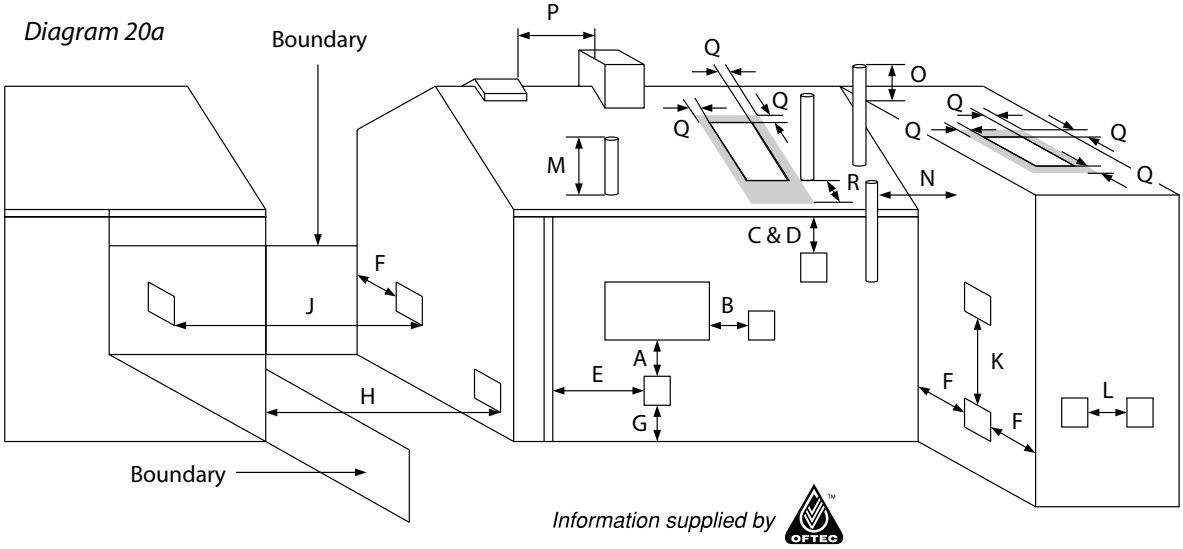

Minimum distances to terminals in millimeters as measured from the top of the chimney or the outer edge of where flue gases pass through low level discharge openings

	Location	Appliance Burner Type	
		Pressure Jet	
		Condensing	
		UK	ROI & NI
A	Directly below an opening, airbrick, opening window etc.	1000mm	600mm
B	Horizontally to an opening, airbrick, opening window etc.	1000mm	600mm
C	Below a gutter, eaves or balcony with protection	1000mm	1000mm
D	Below a gutter or a balcony without protection	1000mm	1000mm
E	From vertical sanitary pipe work	300mm	300mm
F	From an internal or external corner or surface or boundary alongside the terminal	300mm	600mm
G	Above ground or balcony level	300mm	300mm
H	From a surface or a boundary facing the terminal	1200mm	1200mm
J	From a terminal facing the terminal	2500mm	2500mm
K	Vertically from a terminal on the same wall	1500mm	1500mm
L	Horizontally from a terminal on the same wall	750mm	750mm
M	Above the highest point of an intersection with the roof	600mm	600mm
N	From a vertical structure on the side of the terminal	750mm	750mm
O	Above a vertical structure less than 750mm from the side of the terminal	600mm	600mm
P	From a ridge terminal to a vertical structure on the roof	1500mm	1500mm
Q	Above or to the side of any opening on a flat or sloping roof	600mm	600mm
R	Below any opening on a sloping roof	2000mm	2000mm

NOTES: These notes form an integral part of the information shown on the previous page.

1. Terminals should be positioned to avoid products of combustion accumulating in stagnant pockets around the building, or entering into buildings.
2. Appliances burning Class D oil have additional restrictions (see OFTEC Book Four).
3. Vertical structures in N, O and P include lift rooms, parapets, dormers etc.
4. Terminating positions A to L are only permitted for appliances that have been approved for low level flue and low level balanced flue discharge when tested to BS EN 303-1.
5. Terminating positions must be at least 1.8m distant from a fuel storage tank unless a wall with at least 30 minutes fire resistance and extending 300mm higher and wider than the fuel storage tank is provided between the fuel storage tank and the terminating position.
6. Where a flue is terminated less than 1m away from a projection above it and the projection consists of plastic or has a combustible or painted surface, then a heat shield of at least 750mm wide should be fitted to protect these surfaces.
7. If the lowest part of the terminal is less than 2m above the ground, balcony, flat roof or other place to which any person has access, the terminal must be protected by a guard.
8. Notwithstanding the dimensions given in the diagram and table, a terminal should not be sited closer then 300mm to combustible material.
9. It is essential that a flue or chimney does not pass through the roof within the shaded area shown by dimensions Q and R.
10. Where protection is provided for plastic components, such as guttering, it is essential that this is to the standard specified by the manufacturer of the plastic components.

Diagram 20b

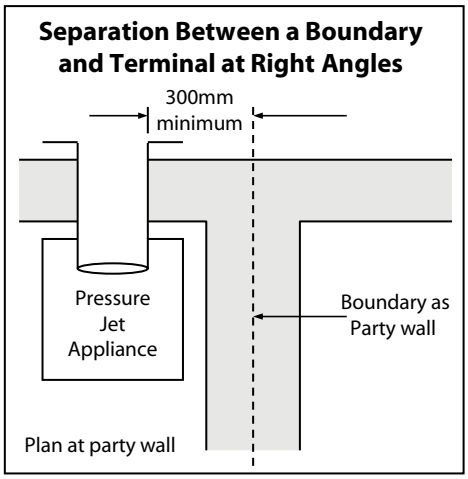

BALANCED FLUE BOILERS

The Firebird boiler may be set for room-sealed flue operation using a Firebird condensing balanced flue kit. This kit does **not** draw **combustion air** from inside the room. **It is drawn from outside, direct to the burner by an air pipe supplied with the boiler.** Flue gases are expelled through the same kit. However, if the boiler is installed in a **compartment** or **small room**, some **ventilation air** is necessary to maintain an acceptable temperature in the boiler area.

Balanced flue boiler in room does not require individual ventilation.

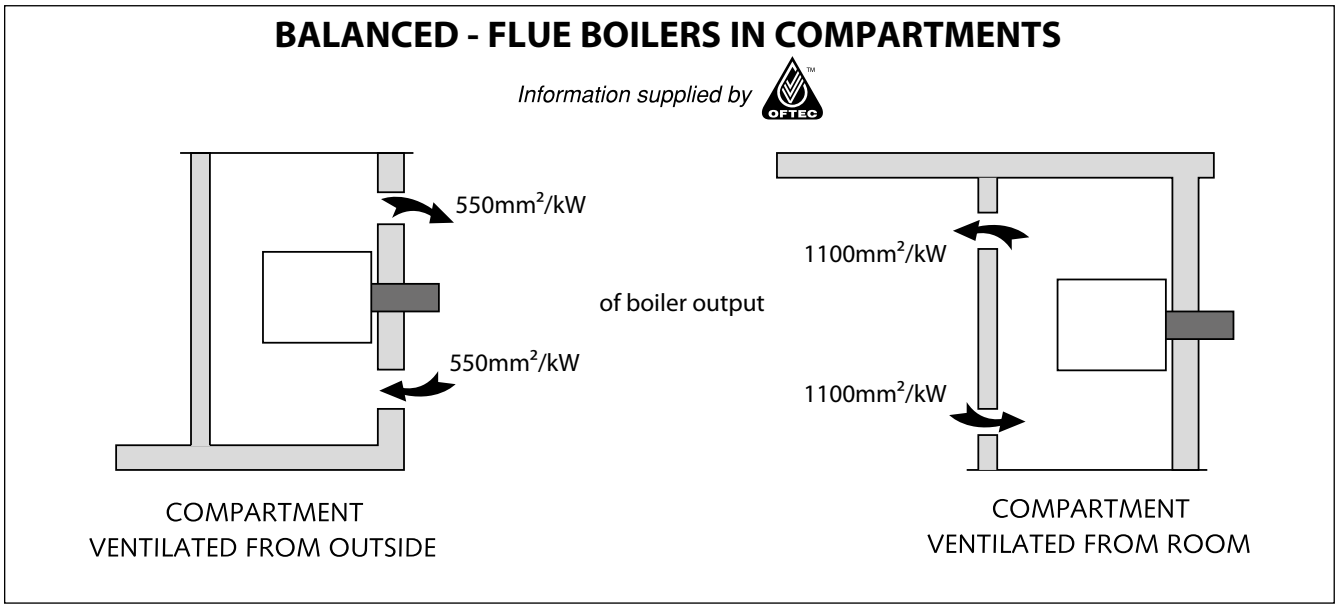

CONDENSATE PLUME DISPERSAL

When choosing the location for a condensing boiler, special consideration must be given to the positioning of the flue terminal. Care should be taken to locate it so as to prevent either the end user or their neighbours perceiving the plume to be a nuisance.

It should be noted that the normal statutory clearances required around low level flue terminals may not be sufficient to cope with plume dispersal from a condensing boiler. The following points should be considered:

1. Plumes can extend out horizontally and can also drift out to the sides and above the terminal. Care needs to be taken, therefore, to avoid the plume reaching adjacent surfaces, particularly windows and neighbours dwellings.

2. Flue terminals need to be located where air can pass freely across them to disperse vapours.

3. The effect of the moisture generated must be considered in relation to the possible corrosion of metal parts it might reach and to the possible formation of ice on pathways in freezing conditions.

4. Keep flue terminals a minimum of 1m (horizontally) from openings in the building.

5. Do not install flue terminals directly below a window.

6. Do not install flue terminals next to a door.

7. Do not install flue terminals within 1m of ventilated soffits or eaves.

8. Keep flue terminals at least 2.5m away from a surface or boundary facing the terminal.

9. In certain circumstances the installation of a plume dispersal extension to the flue may be unavoidable. This takes the plume exhaust from the boiler up and away from any obstruction, door or window opening and will also prevent the risk of re circulation of the plume gasses into the air intake of the burner.

Please note that only Firebird flue kits should be used for flue installations.

CONDENSING BOILER CHIMNEY INSTALLATION

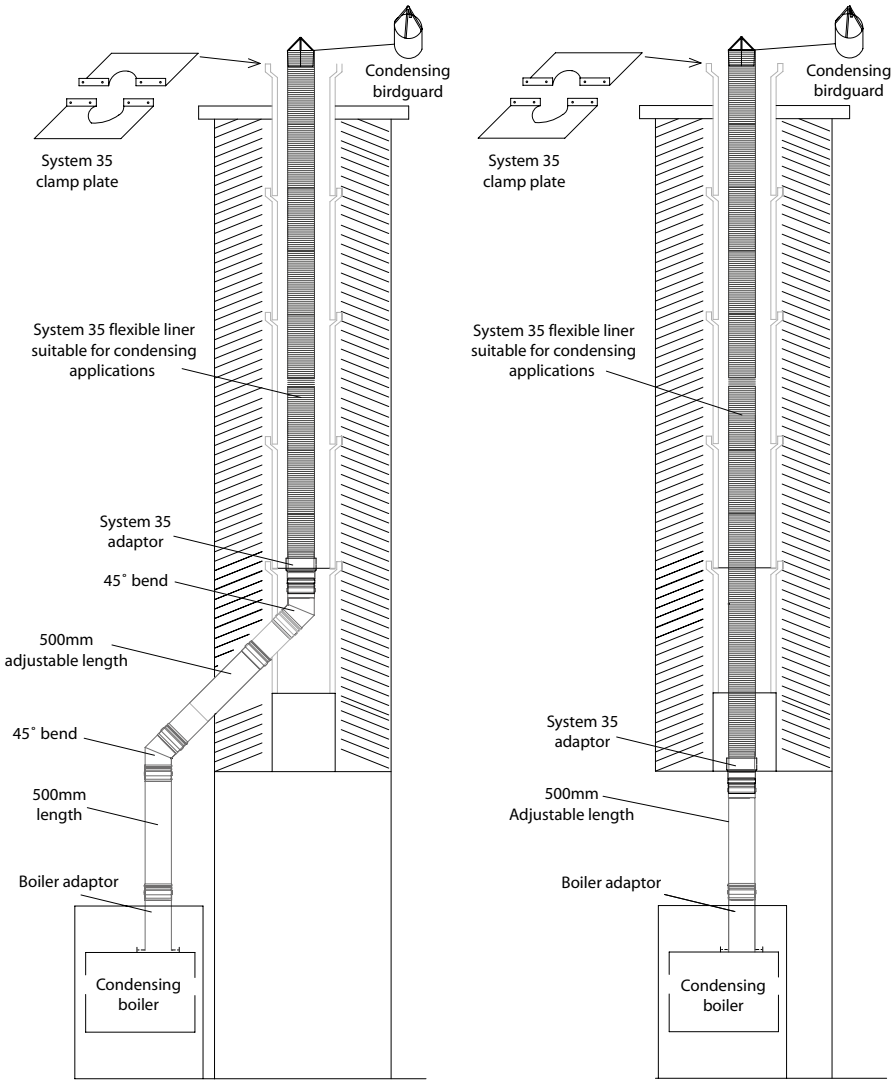

PLUME KIT

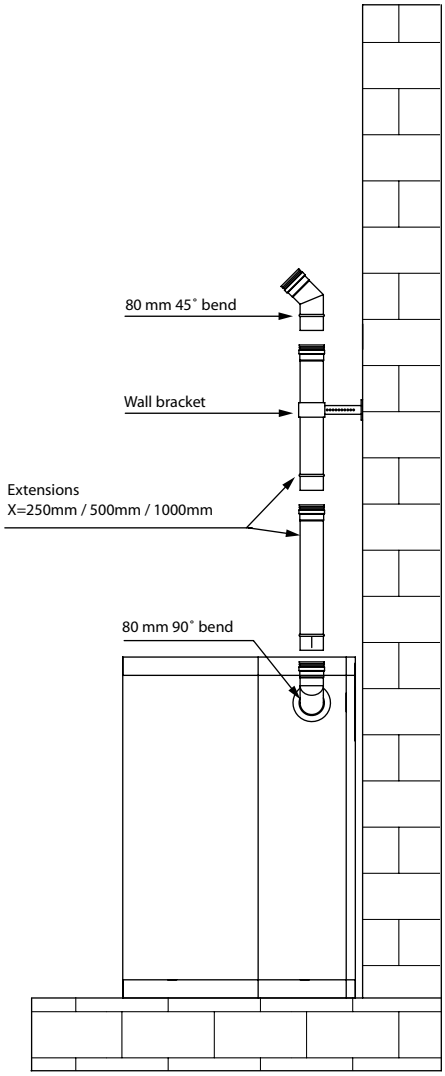

FLUE SIZE

Boiler	Diameter
12-20kW	100mm
20-26kW	100mm
26-35kW	100mm
36-44kW	100mm

Single wall stainless flue suitable for condensing boilers. Available in stainless steel finish or white finish

NOTE:
All brick chimney constructions must comply with current building regulations and BS 5410-1: 2014. Insulated factory made chimneys should comply with BS EN 1856-1: 2009.

FUEL STORAGE TANK SITTING

Consult OFTEC Manuals

It is unlikely that a fire will start at a fuel tank. However, the stored fuel must be protected from a fire or heat source that originates nearby. For this reason fuel tanks of up to 3,500 litres should be separated from openings, other than airbricks, in the building by a minimum of 1.8m and a non-fire rated boundary by a minimum of 760mm. Where this cannot be achieved, a 30 minute fire rated barrier should be constructed between the hazard and the tank, which extends a minimum of 300mm higher and 300mm past each end of the tank. Note that a minimum separation distance should be maintained between a flue exit and fire barrier (see page 7 (flue regulations)).

Steel tanks must be mounted on brick or block piers with a waterproof membrane between the piers of the tank.

Fuel storage tanks should not be sited within 1.8m of boiler flue outlets.

Do not allow household waste or hot ashes container in vicinity of oil storage tank or boiler flue outlet.

FLEXIBLE OIL PIPE(S)

A flexible burner oil hose is supplied with the boiler which must be wholly contained within the appliance case.

Please note: A filter must not be fitted inside the boiler and all joints in the oil line must be oil tight. Soldered joints are not permissible. Before connecting to the boiler, always flush the complete oil supply line and ensure that the liquid fuel supply is completely clean and free of any dirt or foreign matter.

OIL LINE CONFIGURATION

Refer to burner manual section on Hydraulic Systems for:

- Two pipe systems.
- Pipe sizing & distance.
- Tank heights.
- Pump priming.

REGULATIONS & STANDARDS

Please consult all local and regional regulations, relevant to water resources (control of pollution and oil storage) as well as OFTEC Book Three.

3.1 SYSTEM BOILER - HOUSEHOLDER/END USER INFORMATION

Please consult with your installer regarding the operation of your boiler. This should include timer operation/ room thermostat operation and any other additional operational features. The basic features of the control panel are outlined below.

SYSTEM BOILER
12-20kW, 20-26kW and 26-35kW

This controller has a number of new features as standard, these include: short cycling, frost protection, on/off switch option, hours of operation records, system pressure display, pump over-run and liquid-crystal display (LCD). The LCD shows key boiler information and error codes. This controller can work with and be controlled by room thermostats, timers or heat demand switches.

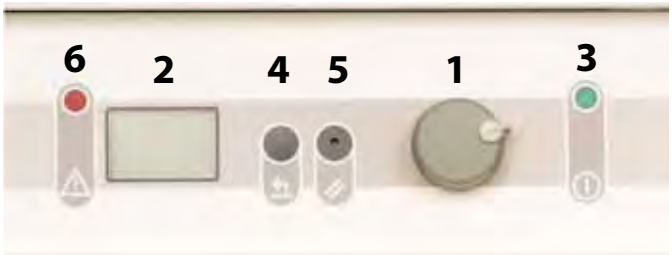

CONTROL PANEL

1. Temperature control knob.
2. LCD.
3. Power green light. Lights green when power to the panel.
4. Mode button (for scrolling through the display options on the LCD).
5. Re-set button.
6. Error red light.

TO START THE BOILER:

- Turn fuel supply on.
- Switch power supply to boiler on.
- The green led will light up and the LCD will show the set temperature or "off".
- If "off" appears on the LCD, press button the mode button "4" and hold for 6 seconds until the set temperature appears on the led.
- Turn on the timer or heat demand switch, i.e. room stat.
- Turn the temperature dial clockwise to increase temperature. The set temperature displayed on the LCD will increase. Temperature range - min. 60˚C to max. 85˚C.

TO TURN THE BOILER OFF:

- Press button 4 and hold for 6 seconds until "off" appears on the LCD.
- Switch the timer or heat demand off.
- Turn off the mains electrical supply.

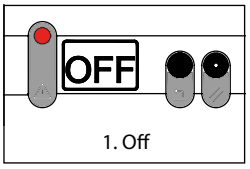

1. Off

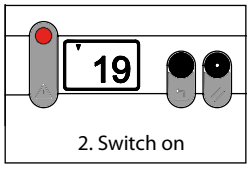

2. Switch on

CONTROL PANEL FUNCTIONS

The LCD displays the boiler set temperature, actual boiler temperature, hours of operation, system pressure (if a pressure sensor is fitted) and program number. The different displays are accessed by pressing the mode button "4" on the panel.

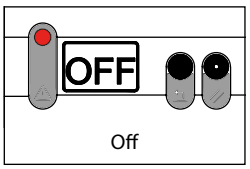

Off

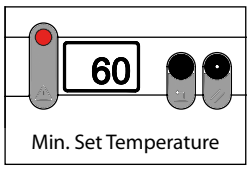

Min. Set Temperature

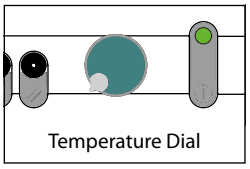
Temperature Dial

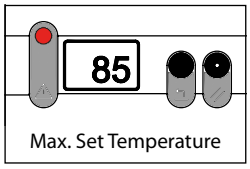

Max. Set Temperature

MODE BUTTON & LCD

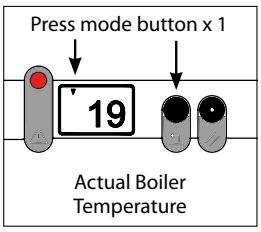

Actual Boiler Temperature

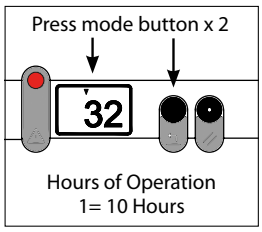

Hours of Operation
1= 10 Hours

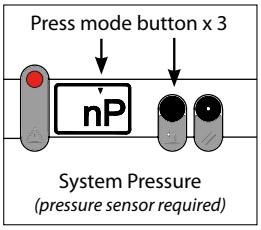

System Pressure
(pressure sensor required)

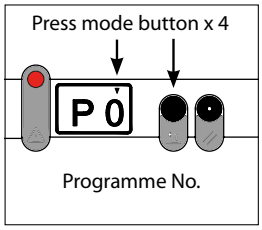

Programme No.

ERROR DISPLAY AND RE-SET

Warning: Should an error appear on the control panel display, consult your service engineer or the Firebird technical department before attempting to re-set the error.

ERROR DISPLAY

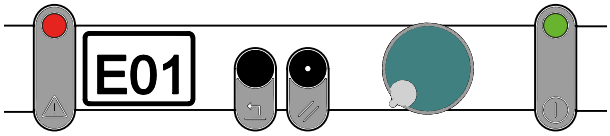

E1 Thermistor fault.
E2 Flue thermistor fault (if flue thermistor installed into flue).
E5 Burner lockout. Burner fault.

NOTE: In the event of the boiler overheating, the limit thermostat will shut off power to the panel.

RE-SET CONTROLLER

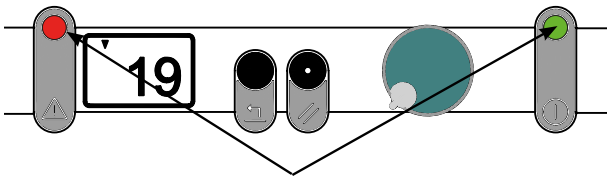

To re-set and clear an error from the control panel:

- Use the tip of a pin and insert into the re-set button "5" on the panel. Press and hold until the error clears.
- For E5 (burner lockout), press the lockout button on the burner first. This will not be lit up as normal, then press the reset button "3" on the panel.

3

SYSTEM BOILER 36-44kW

Minimum Medium Maximum

BOILER THERMOSTAT/THERMISTOR FUNCTION

The control thermostat on the boiler allows the householder to vary temperature to central heating from a low of 60˚C to 80˚C, depending on the model. Thermostats have a tolerance of ± 4˚C.

In accordance with EU boiler standards, your boiler is also fitted with a safety high limit thermostat, fixed at 110˚C. This system protects the boiler in the event of the control thermostat failing and keeps the boiler safe.

The safety high limit thermostat will shut the boiler off and will require the limit button to be pushed to restart the boiler. It is recommended to call a service engineer to establish the cause.

BURNER LOCKOUT

The boiler is factory fitted with a burner control box lockout safety feature which operates automatically if a fault occurs in the burner operation. Should this occur, the light on the front of the burner will illuminate.

Press the reset button a maximum of two times. If the boiler fails to light, call a service engineer who should check the following:

A. An interruption in the fuel supply (eg. empty fuel supply tank).
B. An electrical supply fault.
C. A fault with the burner or its safety control system.
D. The failure of a burner component.
E. Worn or dirty fuel nozzle.
F. Incorrect flue installation.

3.2 SYSTEM BOILER - INSTALLER GUIDELINES

Please note the following important points before commencing installation.

Installation should only be carried out by a competent, qualified engineer, preferably OFTEC registered, familiar with the installation of the Firebird boilers referred to in this manual.

WARNING

The manufacturer cannot accept responsibility for any damage to persons, animals or property due to error in installation or in the burner adjustment or due to improper or unreasonable use or non-observance of the technical instruction enclosed with the burner, or due to the intervention of unqualified personnel.

POSITIONING THE BOILER

Compliance guide to part L now states that when installing a boiler on a new or existing system, the system should be cleaned, flushed and then protected with a suitable protection inhibitor.

Ensure that adequate clearance is available for making the water and flue connections.

The boiler is serviced from the front and a clearance of 750mm must be available at the front of the boiler.

No special hearth is required as the boiler is fully insulated, but the floor must be level and capable of supporting the weight of the boiler and its water content.

Sound levels must also be a consideration. Whilst Firebird condensing liquid fuel boilers are one of the quietest boilers on the market, some householders are particularly sensitive.

A suitable corrosion inhibitor must be added to the heating system.

UNDERFLOOR HEATING

The boiler should not be directly connected to underfloor heating, as a minimum return temperature of 40˚C is required (it can be used with underfloor heating with adequate temperature controls to ensure return values are as stated above).

PLASTIC PIPING

The boiler thermostat control and safety system is not designed, and must not be relied on, to protect plastic pipe from overheating. Plastic pipe must never be connected directly to the boiler and there must be at least 1 meter of copper pipe between the boiler and the first plastic connection. If you choose to use plastic pipe anywhere on your heating circuits, please consult the plastic pipe manufacturer for their instruction on how to ensure their product never overheats. Our boiler control and safety high limit thermostats are not designed to fulfil this function. **Firebird accepts no responsibility for failure of plastic piping and fittings for whatever reason.**

PRESSURISED HEATING SYSTEM

The maximum operating working pressure is 2 bar when the system is at full operating temperature.

MAGNETIC FILTRATION

It is recommended at the time of installation of this boiler, to install a permanent effective magnetic filter on the return pipework after the last radiator on the central heating system. This will maintain maximum operational efficiency and protect the boiler from the damaging, long-term effects of "magnetite" (black iron sludge). It is essential that the filter is sized similar to the return pipework. The magnetic filter must be installed in accordance with the manufacturer's instructions and serviced annually.

HARD WATER - LIMESCALE

On initial fill, where it is suspected that there is a high concentration of scale products, a suitable inhibitor must be used to protect the boiler and system. Check with local water authorities if in doubt (max. 200 ppm).

PIPEWORK

Do not obstruct flue fitting with Pipework.
Connect pipework as shown below.

12-20kW - 20-26kW - 26-35kW

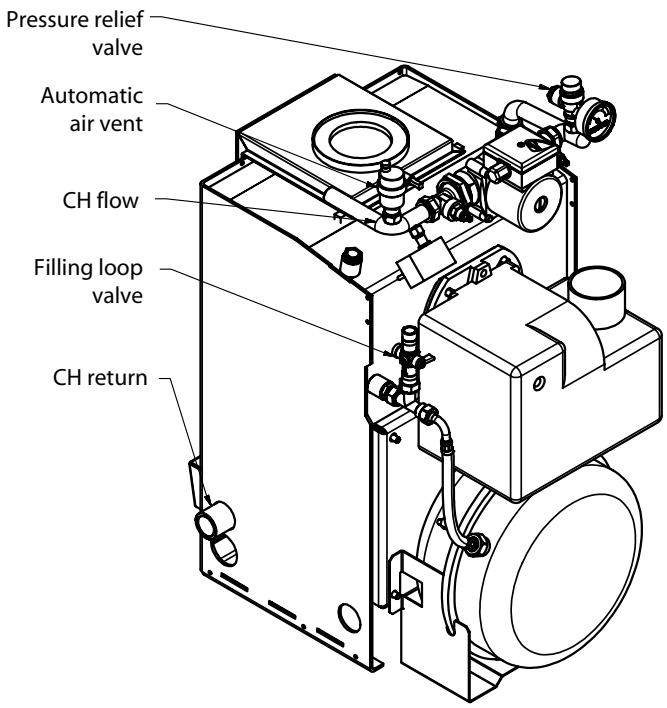

36-44kW

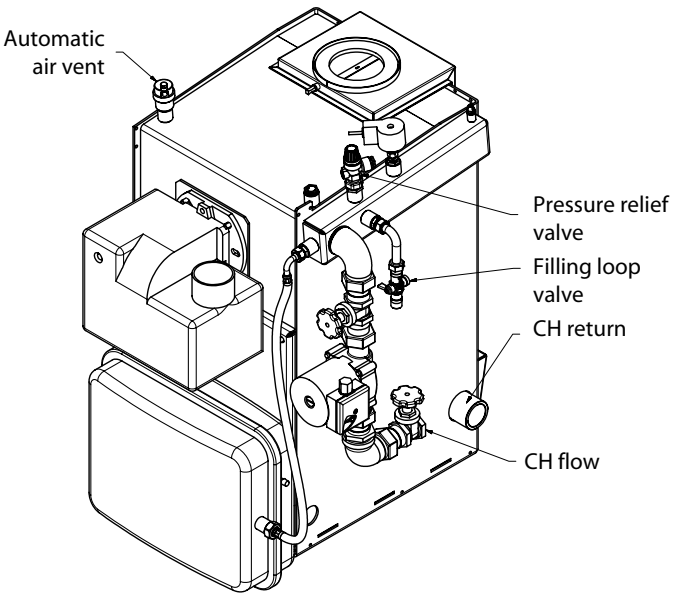

FILLING THE SYSTEM

The unit comes with a factory fitted expansion vessel. Should the total water volume of the system exceed the expansion provided, a second vessel should be added (see below table).

Expansion Vessel and System Requirements

Safety Valve Setting	3 bar		
Initial System Pressure	0.5 bar	1.0 bar	1.5 bar
Total Water Content of System	Total Vessel Volume **		
Litres	**Litres**	**Litres**	**Litres**
25	2.1	2.7	3.9
50	4.2	5.4	7.8
75	6.3	8.2	11.7
100	8.3	10.9	15.6
125	10.4	13.6	19.5
150	12.5	16.3	23.4
175	14.7	19.1	27.2
200	16.7	21.8	31.2
225	18.7	24.5	35.1
250	20.8	27.2	39.0
FOR FURTHER INFORMATION, CONSULT APPROPRIATE TRAINING MANUALS, BS 7074-1: 1989, BS EN 12828: 2012 + A1: 2014 AND ANY OTHER RELEVANT STANDARDS & REGULATIONS.			
* * When calculating the size of any additional expansion vessel, remember to deduct the boiler expansion vessel volume of 12 litres from the calculated total system vessel volume required, as given in the above table.			

FILLING LOOP

Connect the filling loop. Open both valves. Do not allow the unit to exceed 1 bar while filling and a maximum of 2 bar when the radiators are at full operating temperature. The automatic air vent will allow air to dispel from the boiler. To remove air from the storage tank, the manual air vent must be operated. When the system is full, turn off both valves and disconnect the filling loop.

CONNECTING LIQUID FUEL SUPPLY

Using the flexible hose provided, connect the burner to the incoming oil line which must have a remote acting fire valve. **The flexible hose must be contained within the appliance casing.**

FLAP VALVE INSTALLATION

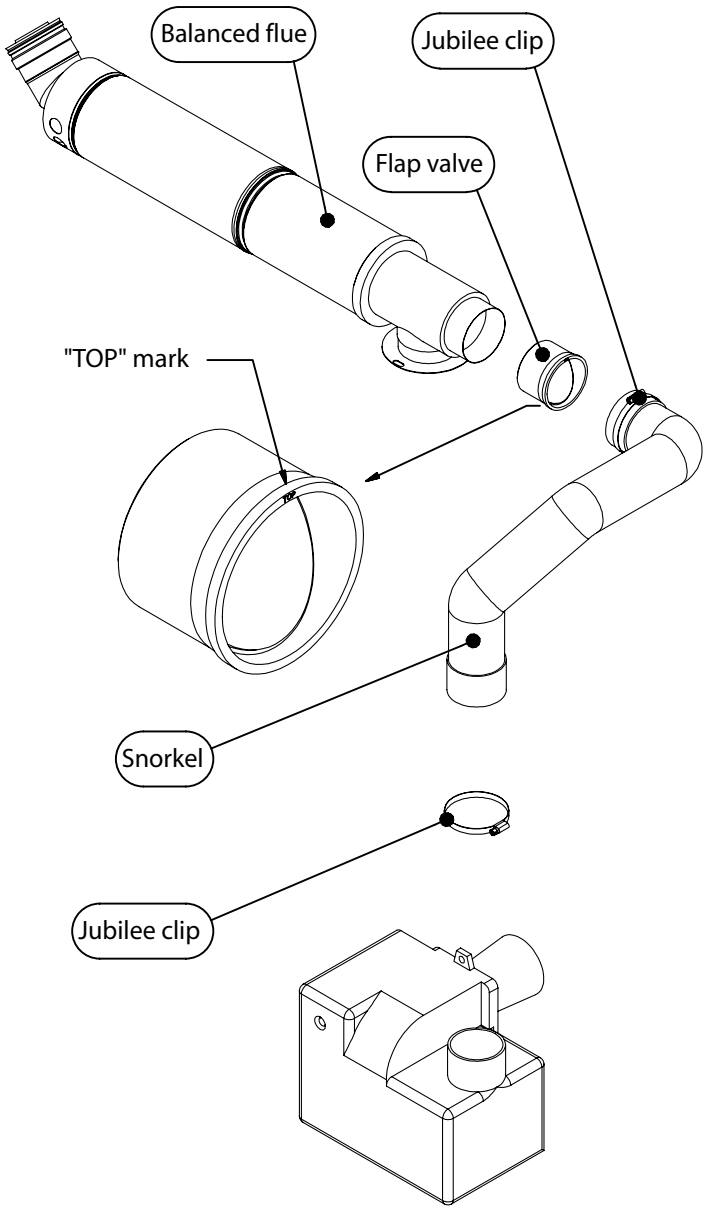

1. Push the flap valve into the balanced flue air intake.
2. Ensure that the flap valve is in the correct position.
3. Push the snorkel hose over the flap valve and air intake and secure with a jubilee clip.
4. Attach the other end of the snorkel hose to the burner with jubilee clip.

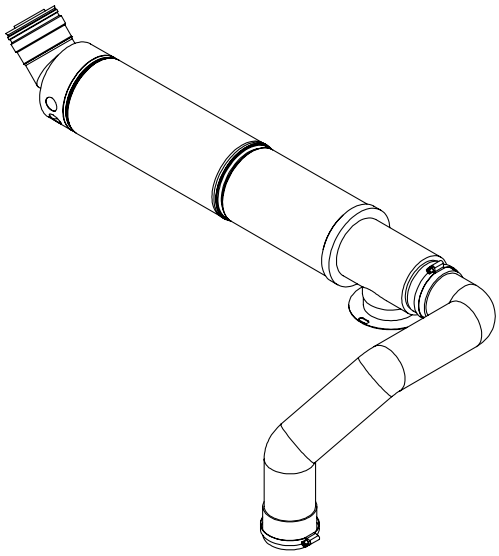

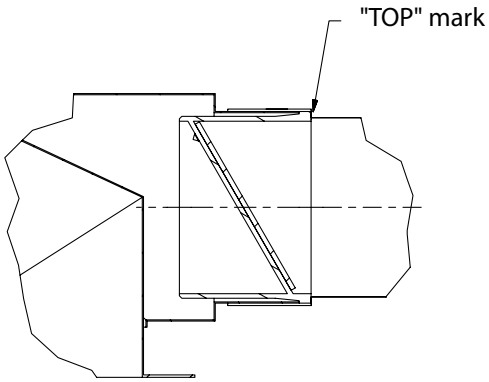

Correct position of flap valve

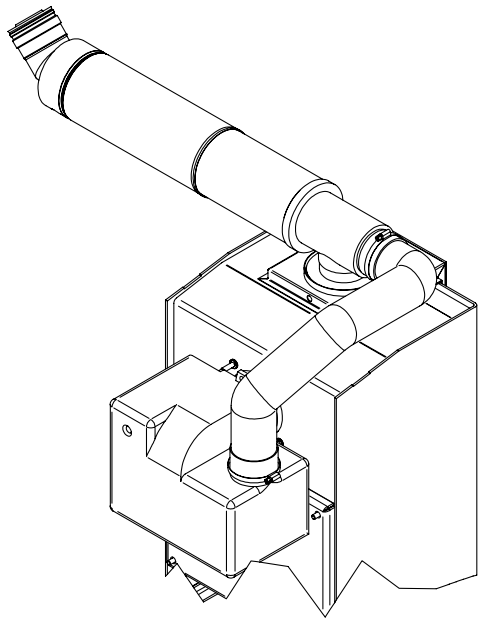

WIRING

Electrical Supply

The boiler and controls require a 230V 50Hz mains electric supply protected with a 5A fuse.

This appliance must be earthed.

A qualified electrician must carry out all electric wiring in accordance with current ETCI / IET Regulations and any local regulations which may apply.

The boiler must have a permanent power supply to enable overrun and frost protection. The hot water and central heating should be timed separately.

THERMOSTAT TEMPERATURE CONTROL

Boiler Central Heating Control:	60˚C - 80˚C
Boiler Safety Limit:	110˚C
Tank (DHW) - Fixed:	78˚C
Early Alert - Fixed	87˚C
Over-run - Fixed:	93˚C

5 PIN (DIGITAL)
SYSTEM BOILER 12-35kW

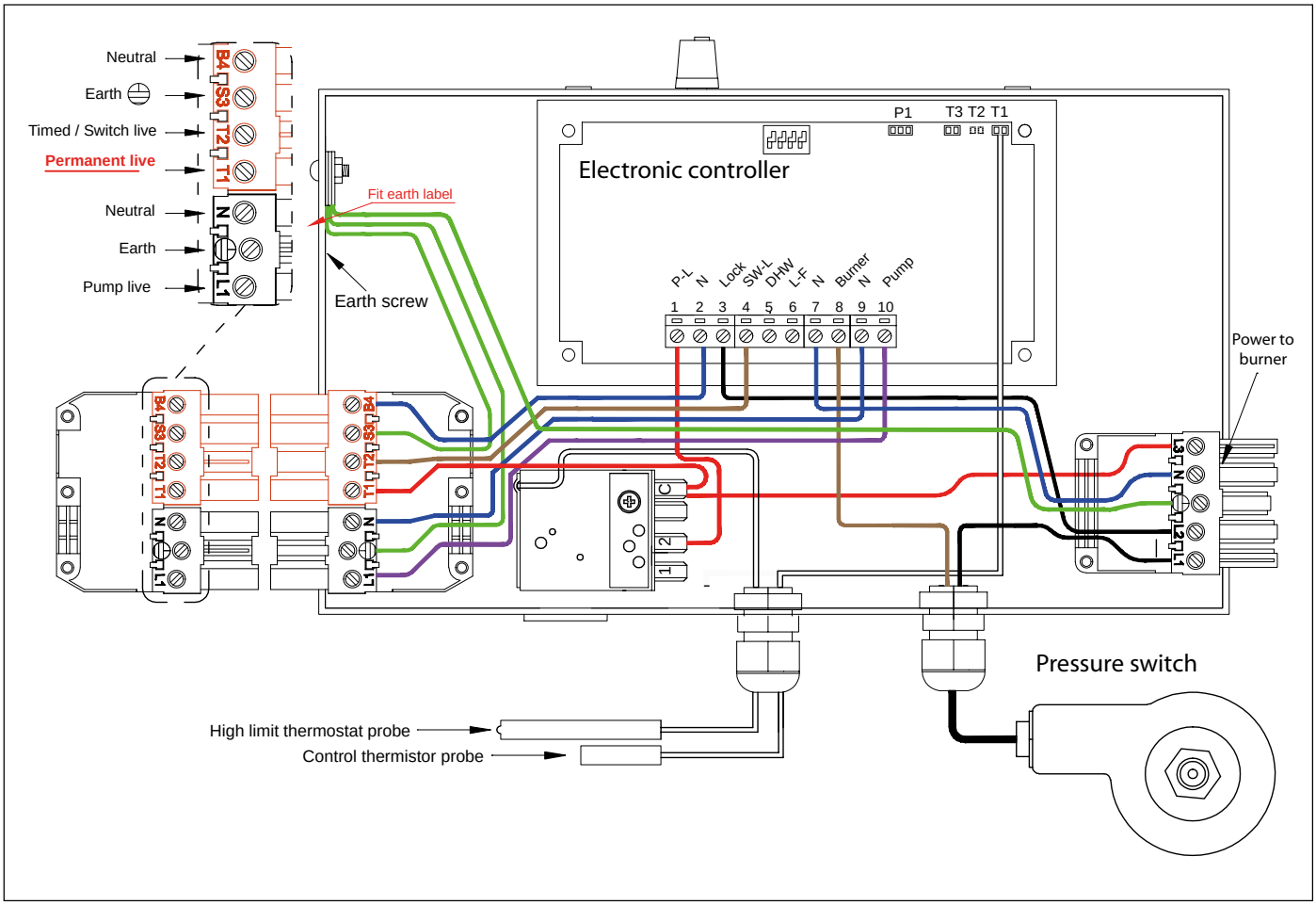

5 PIN (DIGITAL)
SYSTEM BOILER 36-44kW

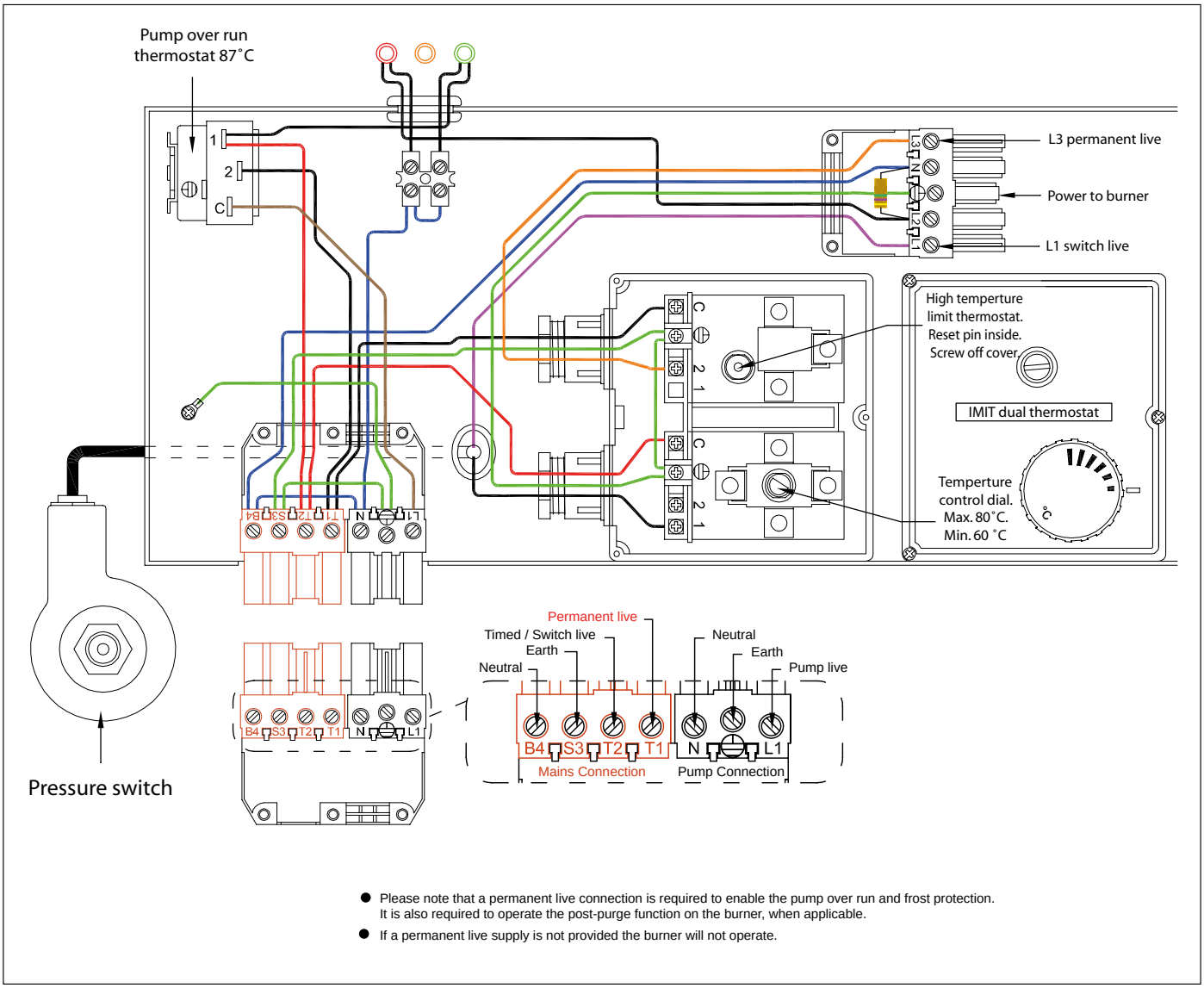

- Please note that a permanent live connection is required to enable the pump over run and frost protection. It is also required to operate the post-purge function on the burner, when applicable.
- If a permanent live supply is not provided the burner will not operate.

TECHNICAL DETAILS

SYSTEM BOILER 12-20kW, 20-26kW AND 26-35kW

Front View

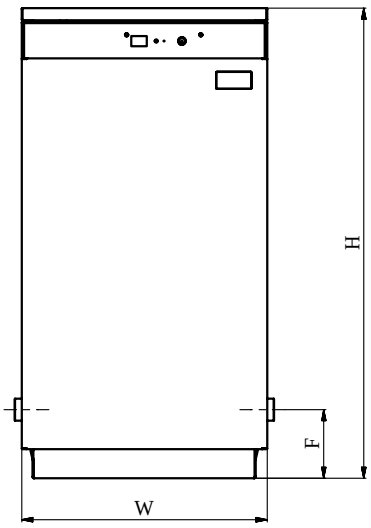

Side View

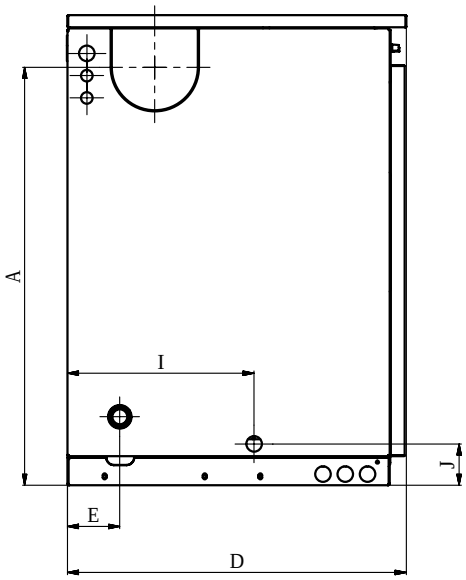

Top View

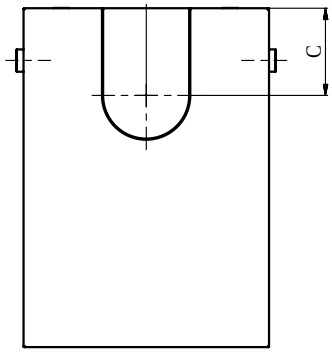

SYSTEM BOILER 36-44kW

Front View

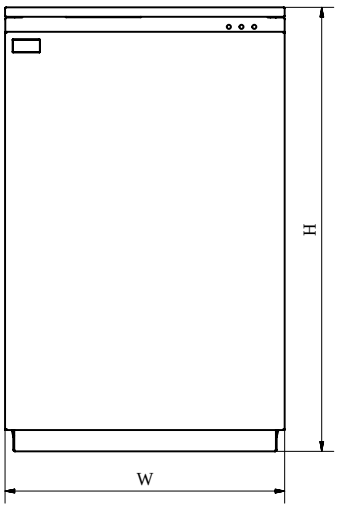

Side View

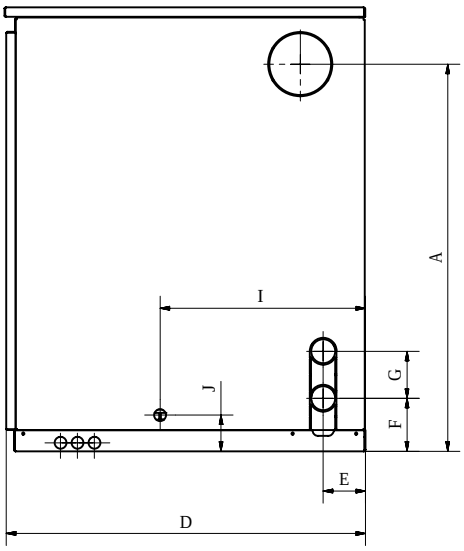

Top View

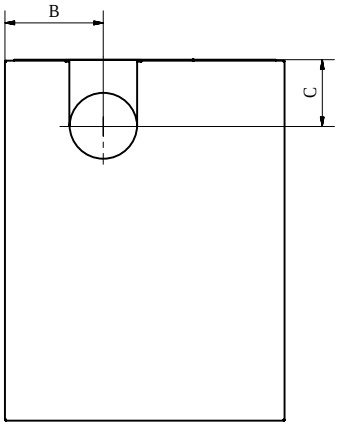

Model - System Envirogreen (output range)	Weight kg	Dimensions (mm)										
		H	W	D	A	B	C	E	F	G	I	J
Envirogreen System 12-20kW	143	847	442	610	753	-	157	94	124	-	336	75
Envirogreen System 20-26kW	146	847	442	610	753	-	157	94	124	-	336	75
Envirogreen System 26-35kW	149	847	442	610	753	-	157	94	124	-	336	75
Envirogreen System 36-44kW	235	1048	660	852	914	232	158	100	125	111	485	86

3.3 SYSTEM BOILER - TECHNICAL DETAILS

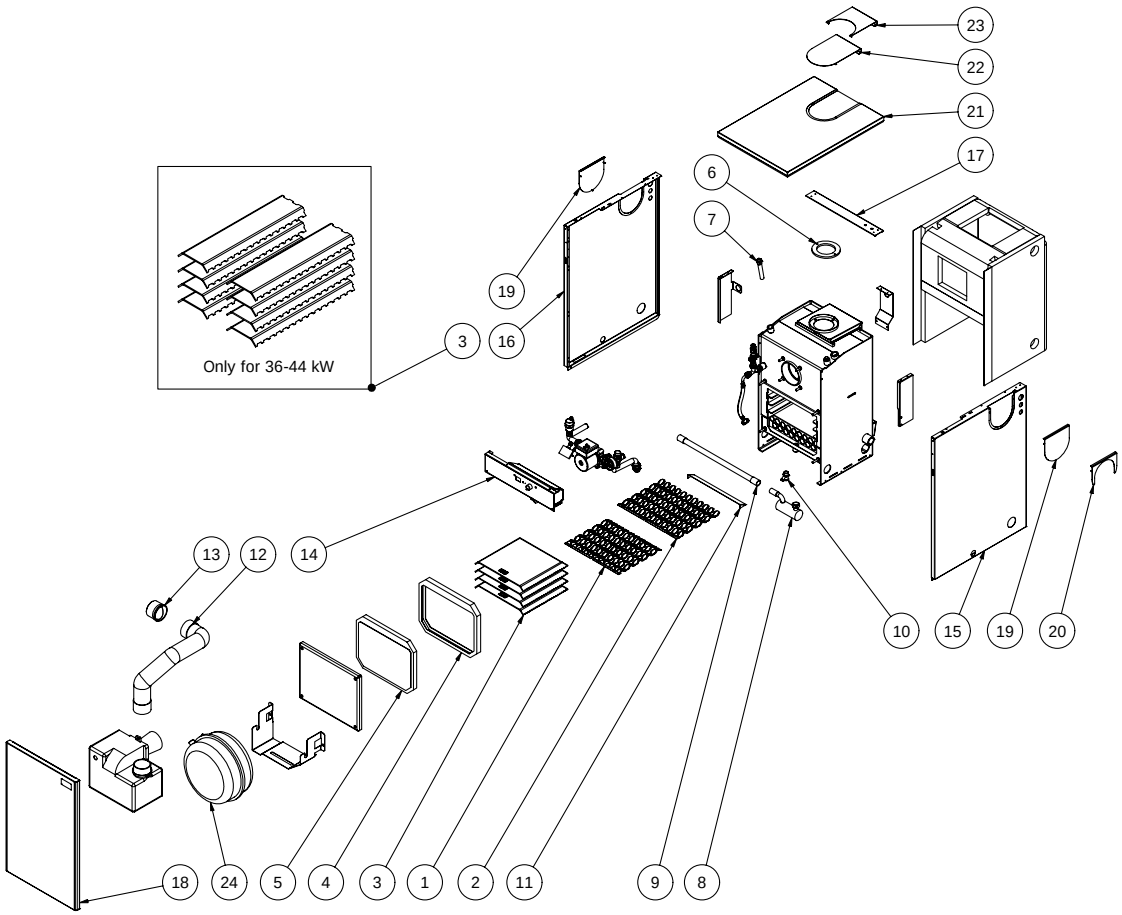

No.	Qty	Description	12-20 kW	20-26 kW	26-35 kW	36-44 kW
1	4	Tube baffle	BA110907	BA110907	BA110907	BA111503 (qty 6)
2	5	Tube baffle single	BA110908	BA110908	BA110908	BA111502 (qty 8)
3	4	Smoke baffle	BA212022	BA212028	BA212122	BA211651 (qty 8)
4	1	Door seal	ACC035GRA	ACC035GRA	ACC035GRA	ACC044GRA
5	1	Door duroboard	ACC035GSK	ACC035GSK	ACC035GSK	ACC044GSK
6	1	Flue gasket	ACC000FRG	ACC000FRG	ACC000FRG	ACC044FRG
7	1	Stat pocket	ACC003PKT	ACC003PKT	ACC003PKT	ACC003PKT
8	1	Condensate trap	ACC000TRP	ACC000TRP	ACC000TRP	ACC000TRP
9	1	Condensate hose	ACC000FLX	ACC000FLX	ACC000FLX	ACC000FLX
10	1	Drain cock	ACC012DRC	ACC012DRC	ACC012DRC	ACC012DRC
11	1	Heat deflector	ACC000HTD	ACC000HTD	ACC000HTD	ACC044HTD
12	1	Air hose	ACC000SSH	ACC000SSH	ACC000SSH	ACC000LSH
13	1	Flap valve	ACC000FLP	ACC000FLP	ACC000FLP	-
14	1	Control panel	ACP001CSB	ACP001CSB	ACP001CSB	ACP001CK3
15	1	Casing right side	ACP002CSR	ACP002CSR	ACP002CSR	ACP011CSR
16	1	Casing left side	ACP013CSL	ACP013CSL	ACP013CSL	ACP012CSL
17	1	Casing back support	ACP006CK	ACP006CK	ACP006CK	ACP006CK3
18	1	Casing front	ACP004CKI	ACP004CKI	ACP004CKI	ACP004CK3
19	2	Side flue blank	ACP007CCE	ACP007CCE	ACP007CCE	-
20	1	Side half moon blank	ACP008CCE	ACP008CCE	ACP008CCE	-
21	1	Casing top	ACP005CKI	ACP005CKI	ACP005CKI	ACP005CK3
22	1	Top flue blank	ACP009CKI	ACP009CKI	ACP009CKI	ACP009CK3
23	1	Top half moon blank	ACP010CKI	ACP010CKI	ACP010CKI	ACP010CK3
24	1	Pressure vessel	ACC012PVL	ACC012PVL	ACC012PVL	ACC018PVL

For burner parts refer to burner manual

TECHNICAL SPECIFICATION

HEAT OUTPUT kW	12-20 + 20-26	26-35	36-44
CONNECTIONS	-	-	-
Heating Flow	22 mm dia.	28 mm dia.	1 ½" BSP
Heating Return	1" BSP	1" BSP	1 ½" BSP
Mains Cold Feed (Copper)	15 mm dia.	15 mm dia.	15 mm dia.
Drain Off Valve	½" BSP	½" BSP	½" BSP
Safety Pressure Valve Outlet (Copper)	15 mm dia.	15 mm dia.	15 mm dia.
Condensate Trap	22 mm dia. plastic pipe	22 mm dia. plastic pipe	22 mm dia. plastic pipe
CIRCULATING PUMP	25/60	25/60	25/80
Integral Expansion Vessel Normal Capacity	12 litres	12 litres	18 litres
Expansion Vessel Pre-charge Pressure	1 bar	1 bar	1 bar
Low Pressure Water Switch?	✔	✔	✔
Filling Loop Included?	✔	✔	✔
WATER CONTENT	-	-	-
Boiler	24 litres	24 litres	45 litres
FLUE (INDOOR BOILERS)	-	-	-
Balanced Flue Assembly	125 (5") mm dia.	125 (5") mm dia.	150 (6") mm dia.
Max. Low Level Flue Length	1.5m	1.5m	1.5m
Max. High Level Balanced Flue Length	6m	6m	6m
HEATING SYSTEM (SEALED)	Fit in accordance with BS 7074 Part 1, BS 5449, OFTEC standards and all other relevant legislation.		
Max. Operating Pressure	2 bar	2 bar	2 bar
Max. System Pressure Cold	1.5 bar	1.5 bar	1.5 bar
Min. System Pressure Cold	0.5 bar	0.5 bar	0.5 bar
Preset Pressure Relief Valve	3 bar	3 bar	3 bar

WATER SIDE RESISTANCE				
Flow Rate To Give A Nominal Output At 10K Differential	**12-20kW**	**20-26kW**	**26-35kW**	**36-44kW**
Flow Rate Measured	1642 kg/h	2135 kg/h	2874 kg/h	3613 kg/h
Waterside Resistance	0.18 mbar	0.18 mbar	0.18 mbar	0.22 mbar
Flow Rate To Give A Nominal Output At 20K Differential	**12-20kW**	**20-26kW**	**26-35kW**	**36-44kW**
Flow Rate Measured	870 kg/h	1131 kg/h	1523 kg/h	2915 kg/h
Waterside Resistance	0.19 mbar	0.19 mbar	0.19 mbar	0.24 mbar

4.1 SYSTEMPAC - HOUSEHOLDER/END USER INFORMATION

Please consult with your installer regarding the operation of your boiler. This should include timer operation/room thermostat operation and any other additional operational features. The basic features of the control panel are outlined below.

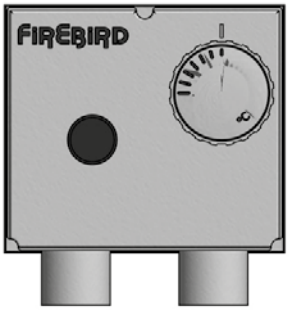

Minimum

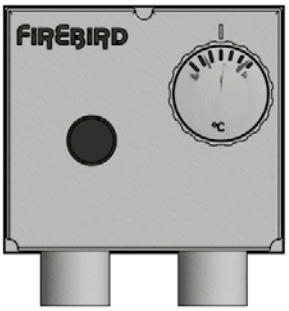

Medium

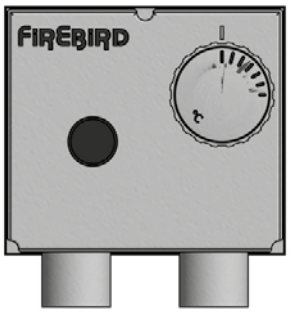

Maximum

BOILER THERMOSTAT/THERMISTOR FUNCTION

The control thermostat on the boiler allows the householder to vary temperature to central heating from a low of 60˚C to 80˚C, depending on the model. Thermostats have a tolerance of ± 4˚C.

In accordance with EU boiler standards, your boiler is also fitted with a safety high limit thermostat, fixed at 110˚C. This system protects the boiler in the event of the control thermostat failing and keeps the boiler safe.

The safety high limit thermostat will shut the boiler off and will require the limit button to be pushed to restart the boiler. It is recommended to call a service engineer to establish the cause.

BURNER LOCKOUT

The boiler is factory fitted with a burner control box lockout safety feature which operates automatically if a fault occurs in the burner operation. Should this occur, the light on the front of the burner will illuminate.

Press the reset button a maximum of two times. If the boiler fails to light, call a service engineer who should check the following:

A. An interruption in the fuel supply (eg. empty fuel supply tank).
B. An electrical supply fault.
C. A fault with the burner or its safety control system.
D. The failure of a burner component.
E. Worn or dirty fuel nozzle.
F. Incorrect flue installation.

Before attempting to restart the boiler, the front panel and the burner cover should be removed and a visual check made for any obvious problems such as oil leaks, loose connections etc. This should be done by a service engineer.

Please note the following important points before commencing installation.

Installation should only be carried out by a competent, qualified engineer, preferably OFTEC registered, familiar with the installation of the Firebird boilers referred to in this manual.

WARNING

The manufacturer cannot accept responsibility for any damage to persons, animals or property due to error in installation or in the burner adjustment or due to improper or unreasonable use or non-observance of the technical instruction enclosed with the burner, or due to the intervention of unqualified personnel.

POSITIONING THE BOILER

Compliance guide to part L now states that when installing a boiler on a new or existing system, the system should be cleaned, flushed and then protected with a suitable protection inhibitor.

Ensure that adequate clearance is available for making the water and flue connections.

The boiler is serviced from the front and a clearance of 750mm must be available at the front of the boiler.

No special hearth is required as the boiler is fully insulated, but the floor must be level and capable of supporting the weight of the boiler and its water content.

Sound levels must also be a consideration. Whilst Firebird condensing liquid fuel boilers are one of the quietest boilers on the market, some householders are particularly sensitive.

A suitable corrosion inhibitor must be added to the heating system.

UNDERFLOOR HEATING

The boiler should not be directly connected to underfloor heating, as a minimum return temperature of 40˚C is required (it can be used with underfloor heating with adequate temperature controls to ensure return values are as stated above).

PLASTIC PIPING

The boiler thermostat control and safety system is not designed, and must not be relied on, to protect plastic pipe from overheating. Plastic pipe must never be connected directly to the boiler and there must be at least 1 meter of copper pipe between the boiler and the first plastic connection. If you choose to use plastic pipe anywhere on your heating circuits, please consult the plastic pipe manufacturer for their instruction on how to ensure their product never overheats. Our boiler control and safety high limit thermostats are not designed to fulfil this function. **Firebird accepts no responsibility for failure of plastic piping and fittings for whatever reason.**

PRESSURISED HEATING SYSTEM

The maximum operating working pressure is 2 bar when the system is at full operating temperature.

MAGNETIC FILTRATION

It is recommended at the time of installation of this boiler, to install a permanent effective magnetic filter on the return pipework after the last radiator on the central heating system. This will maintain maximum operational efficiency and protect the boiler from the damaging, long-term effects of "magnetite" (black iron sludge). It is essential that the filter is sized similar to the return pipework. The magnetic filter must be installed in accordance with the manufacturer's instructions and serviced annually.

HARD WATER - LIMESCALE

On initial fill, where it is suspected that there is a high concentration of scale products, a suitable inhibitor must be used to protect the boiler and system. Check with local water authorities if in doubt (max. 200 ppm).

PIPEWORK

Do not obstruct flue fitting with Pipework.
Connect pipework as shown below.

12-20kW - 20-26kW - 26-35kW

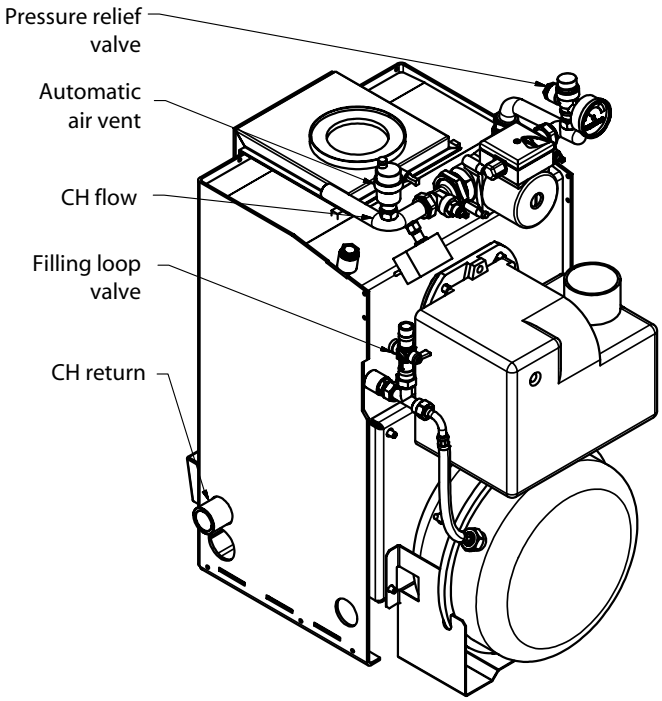

36-44kW

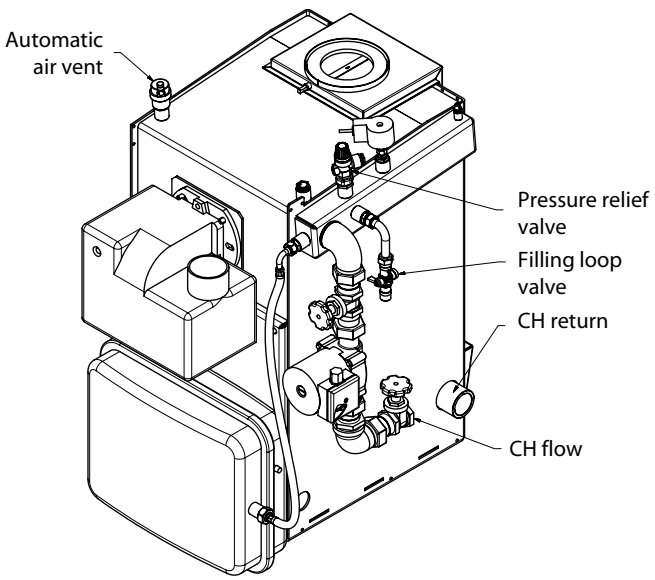

FILLING THE SYSTEM

The unit comes with a factory fitted expansion vessel. Should the total water volume of the system exceed the expansion provided, a second vessel should be added (see below table).

Expansion Vessel and System Requirements

Safety Valve Setting	3 bar		
Initial System Pressure	0.5 bar	1.0 bar	1.5 bar
Total Water Content of System	Total Vessel Volume **		
Litres	**Litres**	**Litres**	**Litres**
25	2.1	2.7	3.9
50	4.2	5.4	7.8
75	6.3	8.2	11.7
100	8.3	10.9	15.6
125	10.4	13.6	19.5
150	12.5	16.3	23.4
175	14.7	19.1	27.2
200	16.7	21.8	31.2
225	18.7	24.5	35.1
250	20.8	27.2	39.0
FOR FURTHER INFORMATION, CONSULT APPROPRIATE TRAINING MANUALS, BS 7074-1: 1989, BS EN 12828: 2012 + A1: 2014 AND ANY OTHER RELEVANT STANDARDS & REGULATIONS.			
* * When calculating the size of any additional expansion vessel, remember to deduct the boiler expansion vessel volume of 12 litres from the calculated total system vessel volume required, as given in the above table.			

FILLING LOOP

Connect the filling loop. Open both valves. Do not allow the unit to exceed 1 bar while filling and a maximum of 2 bar when the radiators are at full operating temperature. The automatic air vent will allow air to dispel from the boiler. To remove air from the storage tank, the manual air vent must be operated. When the system is full, turn off both valves and disconnect the filling loop.

CONNECTING LIQUID FUEL SUPPLY

Using the flexible hose provided, connect the burner to the incoming oil line which must have a remote acting fire valve. **The flexible hose must be contained within the appliance casing.**

WIRING

Electrical Supply

The boiler and controls require a 230V 50Hz mains electric supply protected with a 5A fuse.

This appliance must be earthed.

A qualified electrician must carry out all electric wiring in accordance with current ETCI / IET Regulations and any local regulations which may apply.

The boiler must have a permanent power supply to enable overrun and frost protection. The hot water and central heating should be timed separately.

THERMOSTAT TEMPERATURE CONTROL

The Systempac has a build in frost protection (unit only).

5 PIN (DIGITAL)

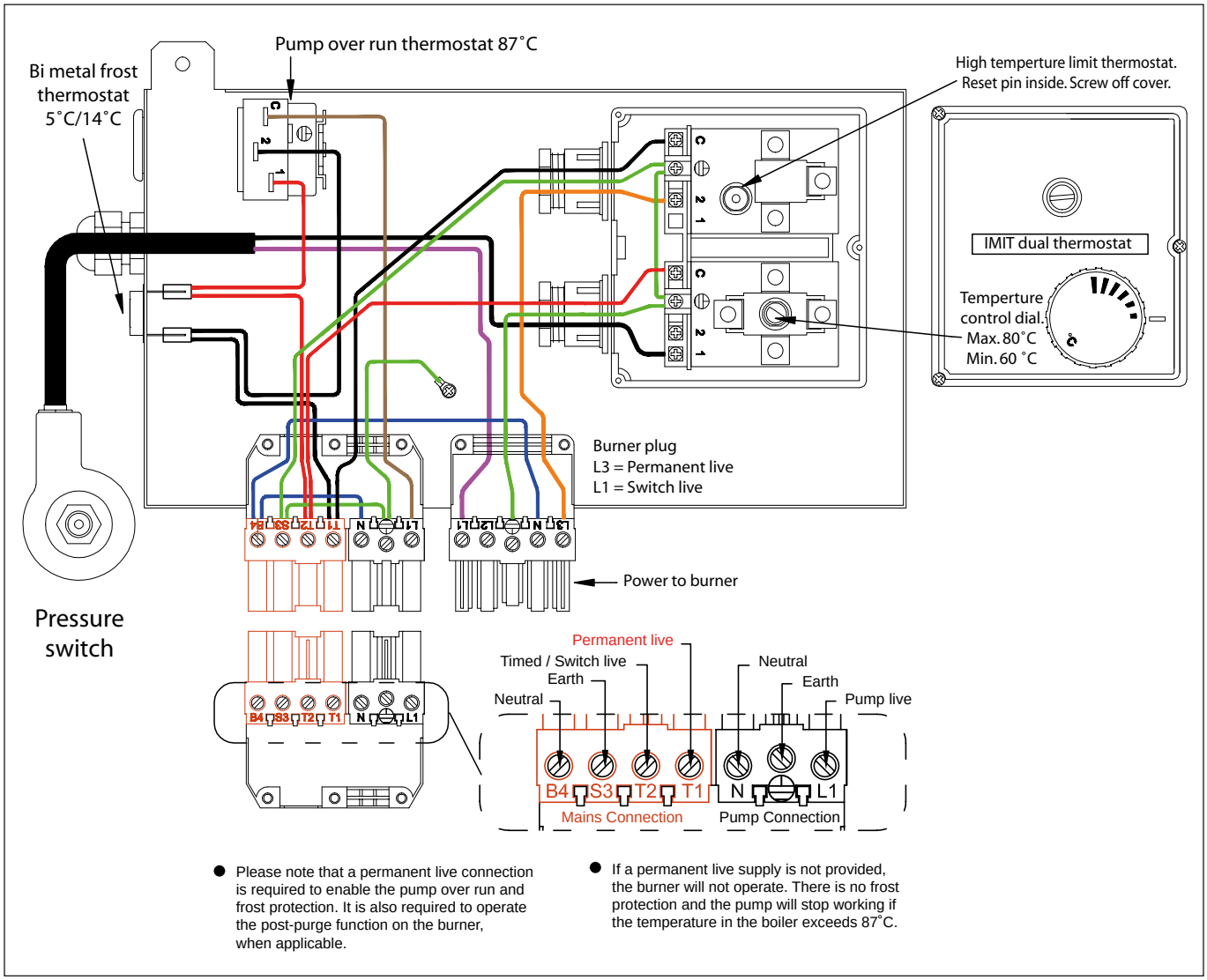

FLUE INSTALLATION

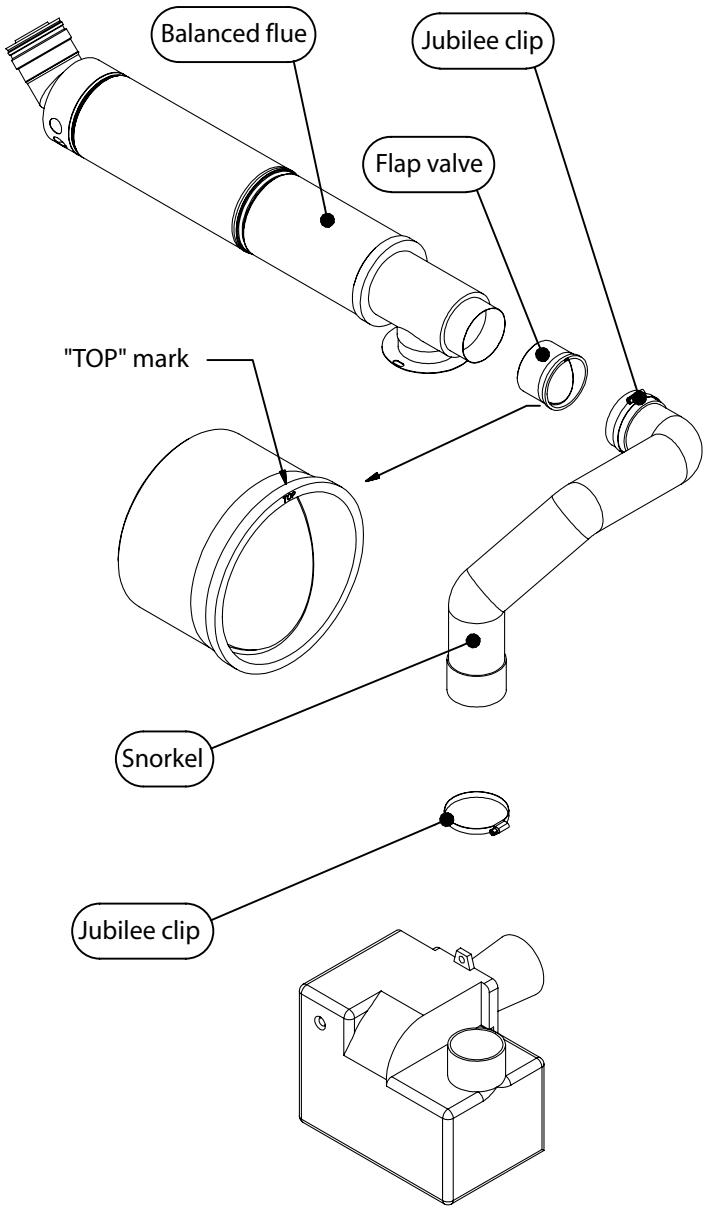

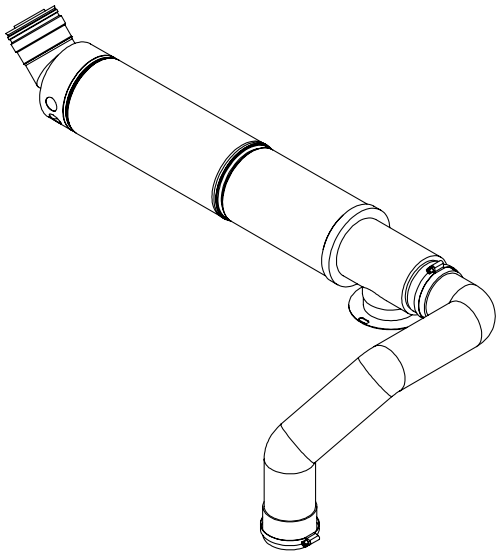

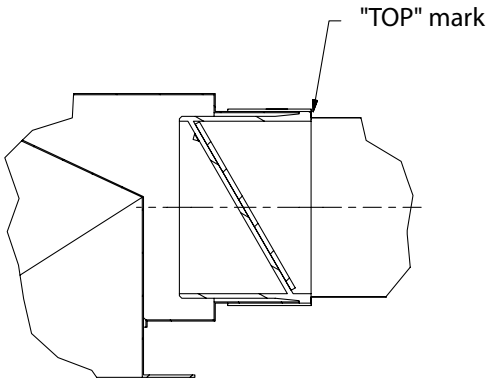

Correct position of flap valve

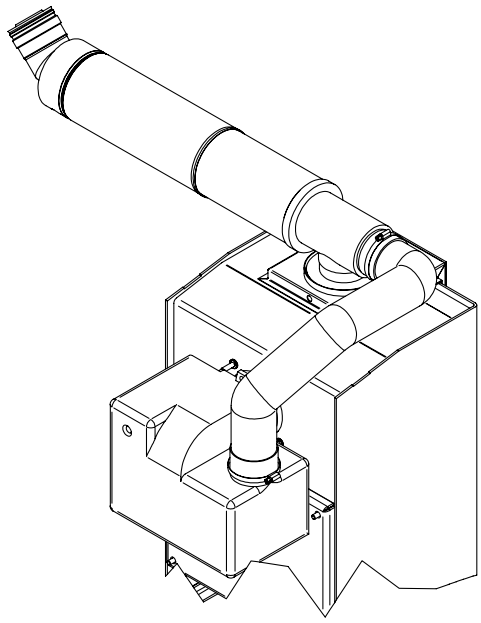

1. Push the flap valve into the balanced flue air intake.
2. Ensure that the flap valve is in the correct position.
3. Push the snorkel hose over the flap valve and air intake and secure with a jubilee clip.
4. Attach the other end of the snorkel hose to the burner with jubilee clip.

TECHNICAL DETAILS

SYSTEMPAC 12-20kW, 20-26kW AND 26-35kW

Front View

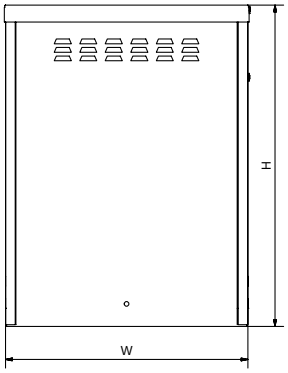

Side View

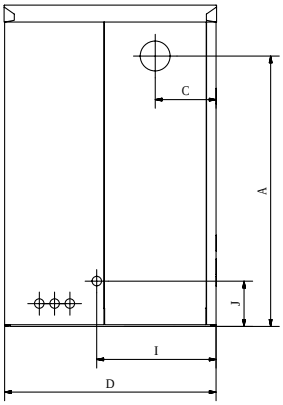

Rear View

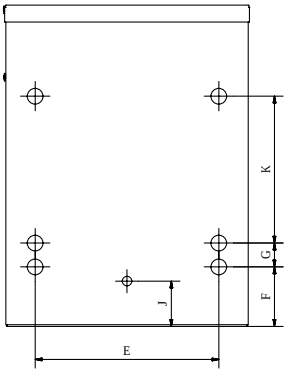

Base

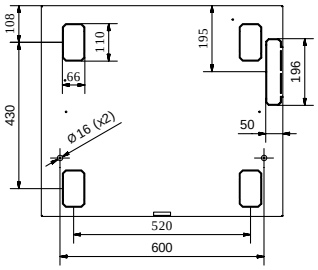

SYSTEMPAC 36-44kW

Front View

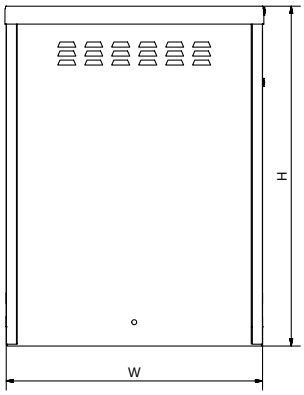

Side View

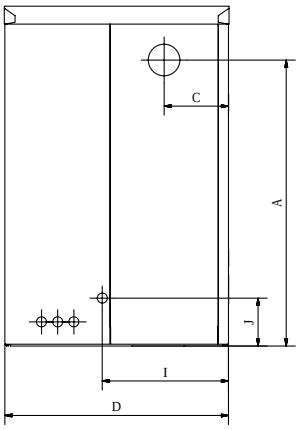

Rear View

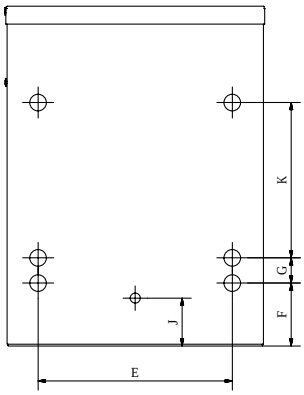

Base

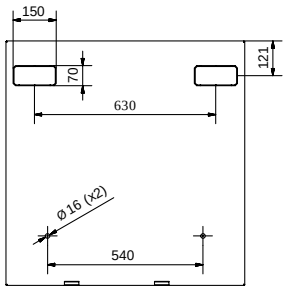

Model - Systempac Envirogreen (output range)	Weight kg	Dimensions (mm)										
		H	W	D	A	C	E	F	G	I	J	K
Envirogreen Systempac 12-20kW	163	945	720	625	795	180	540	175	70	351	133	432
Envirogreen Systempac 20-26kW	163	945	720	625	795	180	540	175	70	351	133	432
Envirogreen Systempac 26-35kW	166	945	720	625	795	180	540	175	70	351	133	432
Envirogreen Systempac 36-44kW	270	1074	839	855	936	180	684	175	115	507	134	505

4.3 SYSTEMPAC - TECHNICAL DETAILS

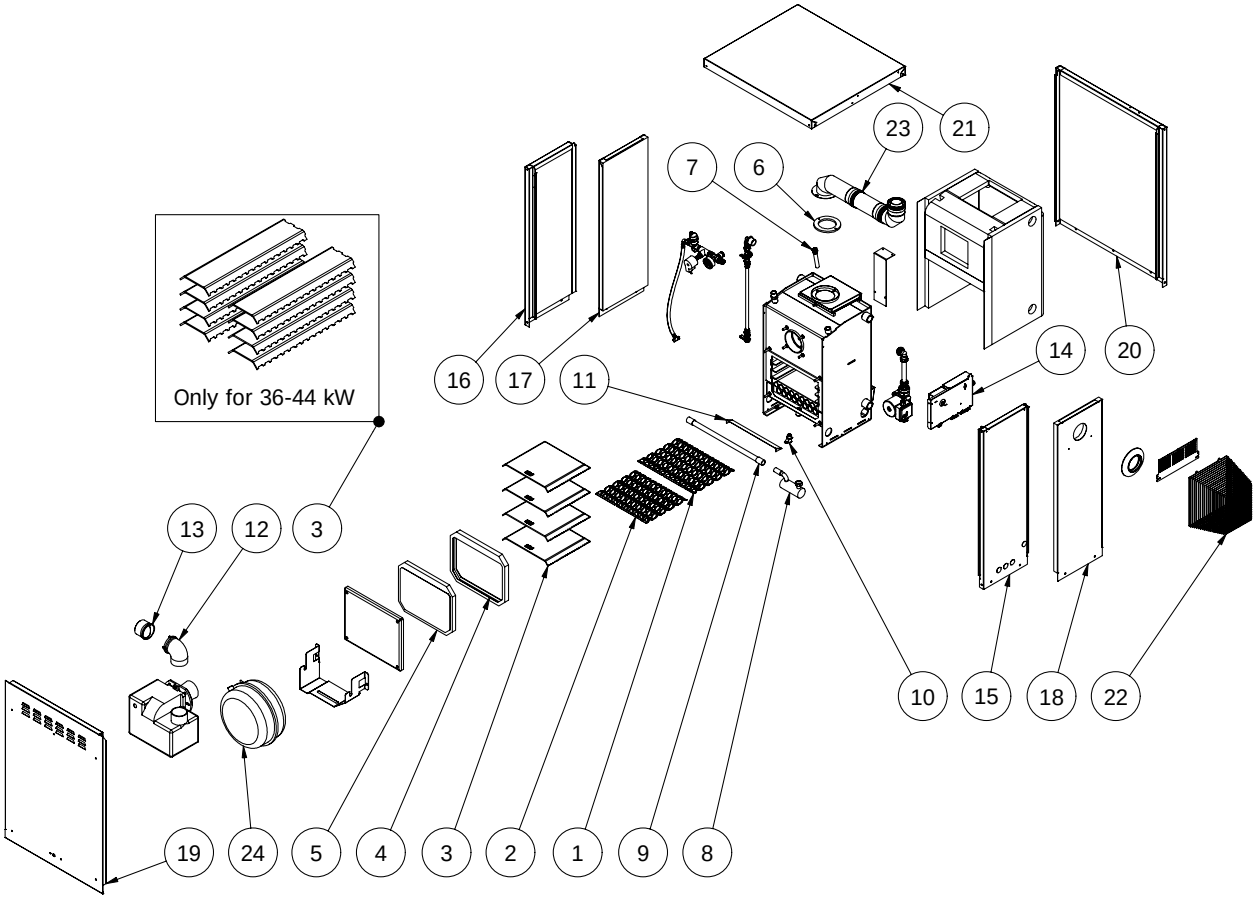

No.	Qty	Description	12-20 kW	20-26 kW	26-35 kW	36-44 kW
1	4	Tube baffle	BA110907	BA110907	BA110907	BA111503 (qty 6)
2	5	Tube baffle single	BA110908	BA110908	BA110908	BA111502 (qty 8)
3	4	Smoke baffle	BA212022	BA212028	BA212122	BA211651 (qty 8)
4	1	Door seal	ACC035GRA	ACC035GRA	ACC035GRA	ACC044GRA
5	1	Door duroboard	ACC035GSK	ACC035GSK	ACC035GSK	ACC044GSK
6	1	Flue gasket	ACC000FRG	ACC000FRG	ACC000FRG	ACC044FRG
7	1	Stat pocket	ACC003PKT	ACC003PKT	ACC003PKT	ACC003PKT
8	1	Condensate trap	ACC000TRP	ACC000TRP	ACC000TRP	ACC000TRP
9	1	Condensate hose	ACC000FLX	ACC000FLX	ACC000FLX	ACC000FLX
10	1	Drain cock	ACC012DRC	ACC012DRC	ACC012DRC	ACC012DRC
11	1	Heat deflector	ACC000HTD	ACC000HTD	ACC000HTD	ACC044HTD
12	1	Flap valve adapter	ACC000FVA	ACC000FVA	ACC000FVA	ACC000FVA
13	1	Flap valve	ACC000FLP	ACC000FLP	ACC000FLP	ACC000FLP
14	1	Control panel	ACP001HPK	ACP001HPK	ACP001HPK	ACP001HPK
15	1	Casing fixed right side	ACP002CCP	ACP002CCP	ACP002CCP	ACP002HP3
16	1	Casing fixed left side	ACP003CCP	ACP003CCP	ACP003CCP	ACP003HP3
17	1	Casing removable left side	ACP103CCP	ACP103CCP	ACP103CCP	ACP103HP3
18	1	Casing removable right side	ACP102CCP	ACP102CCP	ACP102CCP	ACP102HP3
19	1	Casing front	ACP004CCP	ACP004CCP	ACP004CCP	ACP004HP3
20	1	Casing back	ACP006HPK	ACP006HPK	ACP006HPK	ACP006HP3
21	1	Casing top	ACP005CCP	ACP005CCP	ACP005CCP	ACP005HP3
22	1	Terminal guard	ACC000CTG	ACC000CTG	ACC000CTG	ACC000CTG
23	1	Flue kit	HPF035KIT	HPF035KIT	HPF035KIT	HPF044KIT
24	1	Pressure vessel	ACC012PVL	ACC012PVL	ACC012PVL	ACC018PVL

For burner parts refer to burner manual

TECHNICAL SPECIFICATION

HEAT OUTPUT kW	12-20 + 20-26	26-35	36-44
CONNECTIONS	-	-	-
Heating Flow	22 mm dia.	28 mm dia.	1 ½" BSP
Heating Return	1" BSP	1" BSP	1 ½" BSP
Mains Cold Feed (Copper)	15 mm dia.	15 mm dia.	15 mm dia.
Drain Off Valve	½" BSP	½" BSP	½" BSP
Safety Pressure Valve Outlet (Copper)	15 mm dia.	15 mm dia.	15 mm dia.
Condensate Trap	22 mm dia. plastic pipe	22 mm dia. plastic pipe	22 mm dia. plastic pipe
CIRCULATING PUMP	25/60	25/60	25/80
Integral Expansion Vessel Normal Capacity	12 litres	12 litres	18 litres
Expansion Vessel Pre-charge Pressure	1 bar	1 bar	1 bar
Low Pressure Water Switch?	✔	✔	✔
Filling Loop Included?	✔	✔	✔
WATER CONTENT	-	-	-
Boiler	24 litres	24 litres	45 litres
FLUE (INDOOR BOILERS)	-	-	-
Balanced Flue Assembly	125 (5") mm dia.	125 (5") mm dia.	150 (6") mm dia.
Max. Low Level Flue Length	1.5m	1.5m	1.5m
Max. High Level Balanced Flue Length	6m	6m	6m
HEATING SYSTEM (SEALED)	Fit in accordance with BS 7074 Part 1, BS 5449, OFTEC standards and all other relevant legislation.		
Max. Operating Pressure	2 bar	2 bar	2 bar
Max. System Pressure Cold	1.5 bar	1.5 bar	1.5 bar
Min. System Pressure Cold	0.5 bar	0.5 bar	0.5 bar
Preset Pressure Relief Valve	3 bar	3 bar	3 bar

WATER SIDE RESISTANCE				
Flow Rate To Give A Nominal Output At 10K Differential	**12-20kW**	**20-26kW**	**26-35kW**	**36-44kW**
Flow Rate Measured	1642 kg/h	2135 kg/h	2874 kg/h	3613 kg/h
Waterside Resistance	0.18 mbar	0.18 mbar	0.18 mbar	0.22 mbar
Flow Rate To Give A Nominal Output At 20K Differential	**12-20kW**	**20-26kW**	**26-35kW**	**36-44kW**
Flow Rate Measured	870 kg/h	1131 kg/h	1523 kg/h	2915 kg/h
Waterside Resistance	0.19 mbar	0.19 mbar	0.19 mbar	0.24 mbar

5.1 SLIMLINE SYSTEMPAC - HOUSEHOLDER/END USER INFORMATION

Please consult with your installer regarding the operation of your boiler. This should include timer operation/room thermostat operation and any other additional operational features. The basic features of the control panel are outlined below.

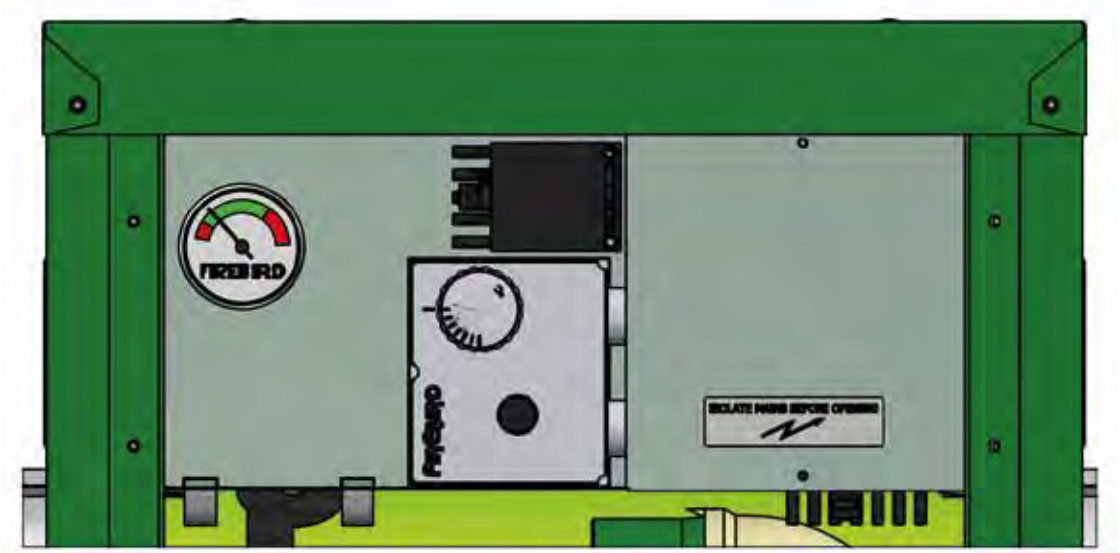

Minimum Medium Maximum

BOILER THERMOSTAT/THERMISTOR FUNCTION

The control thermostat on the boiler allows the householder to vary temperature to central heating from a low of 60˚C to 80˚C, depending on the model. Thermostats have a tolerance of ± 4˚C.

In accordance with EU boiler standards, your boiler is also fitted with a safety high limit thermostat, fixed at 110˚C. This system protects the boiler in the event of the control thermostat failing and keeps the boiler safe.

The safety high limit thermostat will shut the boiler off and will require the limit button to be pushed to restart the boiler. It is recommended to call a service engineer to establish the cause.

BURNER LOCKOUT

The boiler is factory fitted with a burner control box lockout safety feature which operates automatically if a fault occurs in the burner operation. Should this occur, the light on the front of the burner will illuminate.

Press the reset button a maximum of two times. If the boiler fails to light, call a service engineer who should check the following:

A. An interruption in the fuel supply (eg. empty fuel supply tank).
B. An electrical supply fault.
C. A fault with the burner or its safety control system.
D. The failure of a burner component.
E. Worn or dirty fuel nozzle.
F. Incorrect flue installation.

Before attempting to restart the boiler, the front panel and the burner cover should be removed and a visual check made for any obvious problems such as oil leaks, loose connections etc. This should be done by a service engineer.

Please note the following important points before commencing installation.

Installation should only be carried out by a competent, qualified engineer, preferably OFTEC registered, familiar with the installation of the Firebird boilers referred to in this manual.

WARNING

The manufacturer cannot accept responsibility for any damage to persons, animals or property due to error in installation or in the burner adjustment or due to improper or unreasonable use or non-observance of the technical instruction enclosed with the burner, or due to the intervention of unqualified personnel.

POSITIONING THE BOILER

Compliance guide to part L now states that when installing a boiler on a new or existing system, the system should be cleaned, flushed and then protected with a suitable protection inhibitor.

Ensure that adequate clearance is available for making the water and flue connections.

The boiler is serviced from the front and a clearance of 750mm must be available at the front of the boiler.

No special hearth is required as the boiler is fully insulated, but the floor must be level and capable of supporting the weight of the boiler and its water content.

Sound levels must also be a consideration. Whilst Firebird condensing liquid fuel boilers are one of the quietest boilers on the market, some householders are particularly sensitive.

A suitable corrosion inhibitor must be added to the heating system.

UNDERFLOOR HEATING

The boiler should not be directly connected to underfloor heating, as a minimum return temperature of 40˚C is required (it can be used with underfloor heating with adequate temperature controls to ensure return values are as stated above).

PLASTIC PIPING

The boiler thermostat control and safety system is not designed, and must not be relied on, to protect plastic pipe from overheating. Plastic pipe must never be connected directly to the boiler and there must be at least 1 meter of copper pipe between the boiler and the first plastic connection. If you choose to use plastic pipe anywhere on your heating circuits, please consult the plastic pipe manufacturer for their instruction on how to ensure their product never overheats. Our boiler control and safety high limit thermostats are not designed to fulfil this function. **Firebird accepts no responsibility for failure of plastic piping and fittings for whatever reason.**

PRESSURISED HEATING SYSTEM

The maximum operating working pressure is 2 bar when the system is at full operating temperature.

MAGNETIC FILTRATION

It is recommended at the time of installation of this boiler, to install a permanent effective magnetic filter on the return pipework after the last radiator on the central heating system. This will maintain maximum operational efficiency and protect the boiler from the damaging, long-term effects of "magnetite" (black iron sludge). It is essential that the filter is sized similar to the return pipework. The magnetic filter must be installed in accordance with the manufacturer's instructions and serviced annually.

HARD WATER - LIMESCALE

On initial fill, where it is suspected that there is a high concentration of scale products, a suitable inhibitor must be used to protect the boiler and system. Check with local water authorities if in doubt (max. 200 ppm).

PIPEWORK

Do not obstruct flue fitting with Pipework.
Connect pipework as shown below.

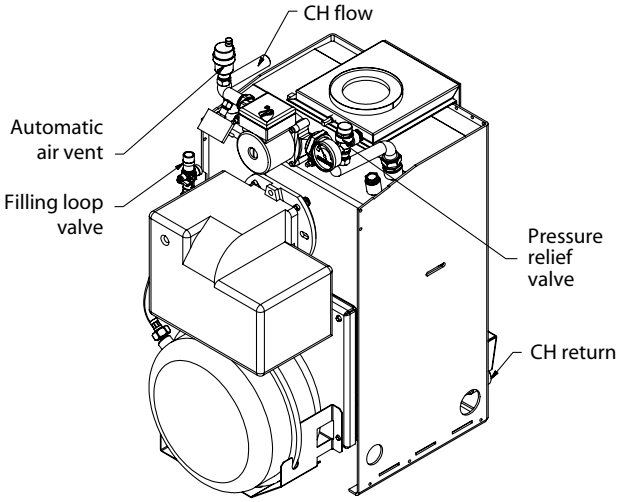

FILLING THE SYSTEM

The unit comes with a factory fitted expansion vessel. Should the total water volume of the system exceed the expansion provided, a second vessel should be added (see below table).

Expansion Vessel and System Requirements

Safety Valve Setting	3 bar		
Initial System Pressure	0.5 bar	1.0 bar	1.5 bar
Total Water Content of System	Total Vessel Volume **		
Litres	**Litres**	**Litres**	**Litres**
25	2.1	2.7	3.9
50	4.2	5.4	7.8
75	6.3	8.2	11.7
100	8.3	10.9	15.6
125	10.4	13.6	19.5
150	12.5	16.3	23.4
175	14.7	19.1	27.2
200	16.7	21.8	31.2
225	18.7	24.5	35.1
250	20.8	27.2	39.0
FOR FURTHER INFORMATION, CONSULT APPROPRIATE TRAINING MANUALS, BS 7074-1: 1989, BS EN 12828: 2012 + A1: 2014 AND ANY OTHER RELEVANT STANDARDS & REGULATIONS.			
* * When calculating the size of any additional expansion vessel, remember to deduct the boiler expansion vessel volume of 12 litres from the calculated total system vessel volume required, as given in the above table.			

FILLING LOOP

Connect the filling loop. Open both valves. Do not allow the unit to exceed 1 bar while filling and a maximum of 2 bar when the radiators are at full operating temperature. The automatic air vent will allow air to dispel from the boiler. To remove air from the storage tank, the manual air vent must be operated. When the system is full, turn off both valves and disconnect the filling loop.

CONNECTING LIQUID FUEL SUPPLY

Using the flexible hose provided, connect the burner to the incoming oil line which must have a remote acting fire valve. **The flexible hose must be contained within the appliance casing.**

WIRING

Electrical Supply

The boiler and controls require a 230V 50Hz mains electric supply protected with a 5A fuse.

This appliance must be earthed.

A qualified electrician must carry out all electric wiring in accordance with current ETCI / IET Regulations and any local regulations which may apply.

The boiler must have a permanent power supply to enable overrun and frost protection. The hot water and central heating should be timed separately.

THERMOSTAT TEMPERATURE CONTROL

The Slimline Systempac has a build in frost protection (unit only).

5 PIN (DIGITAL)

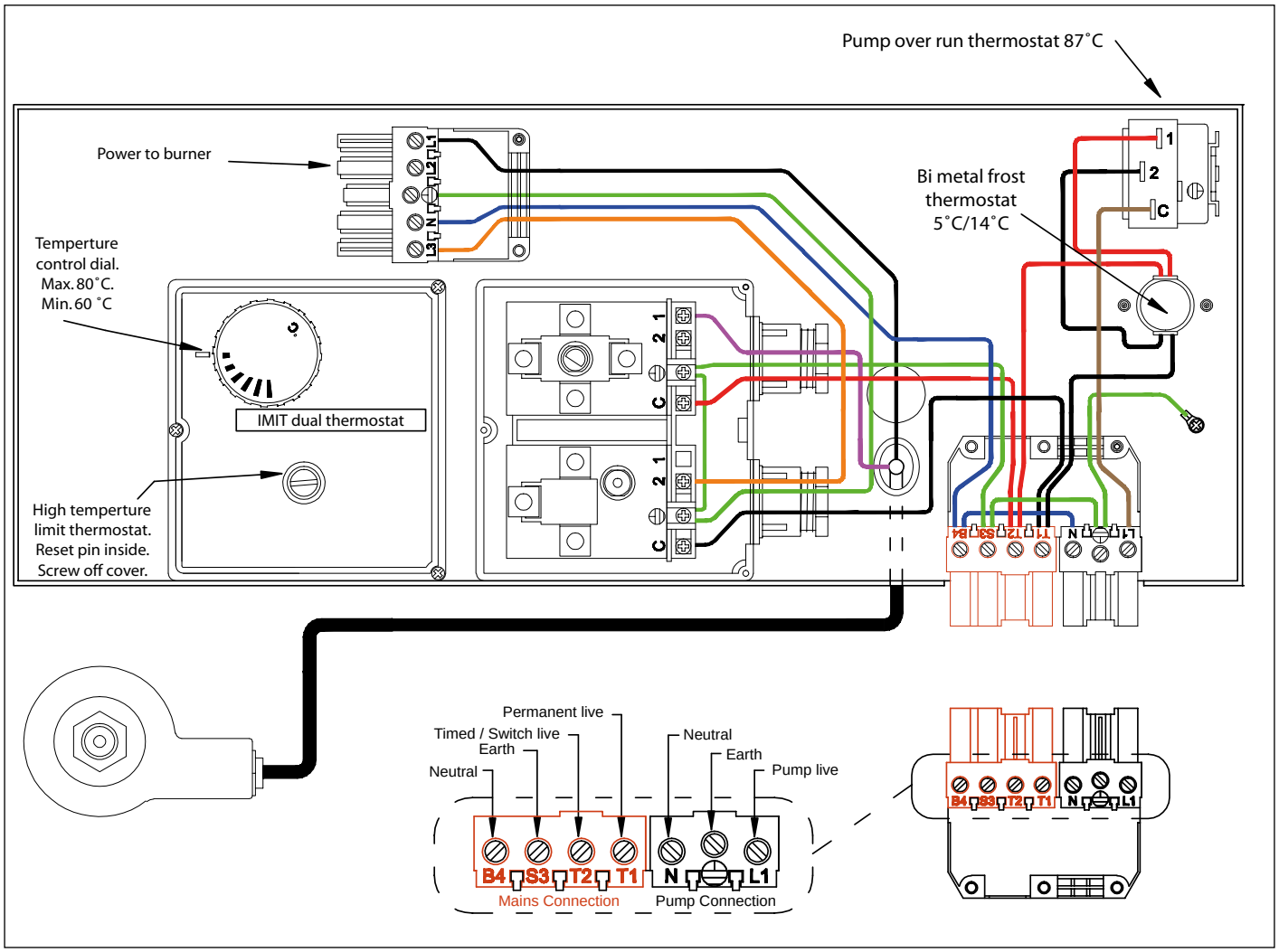

FLUE INSTALLATION

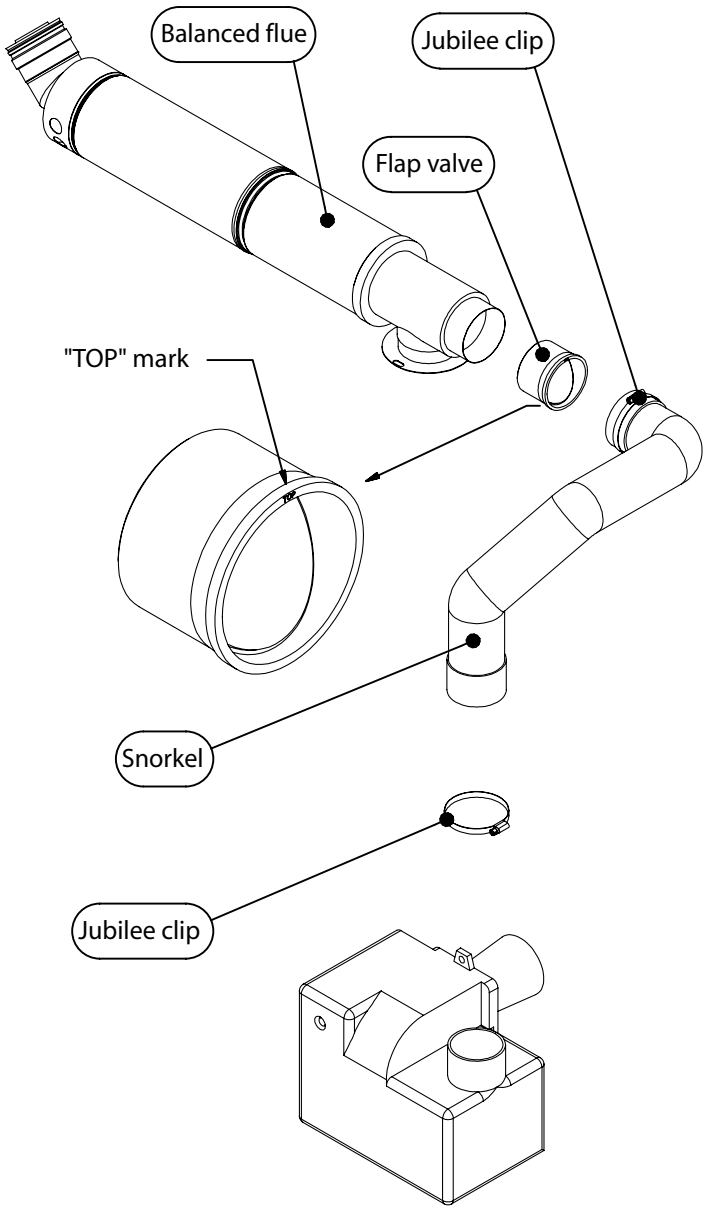

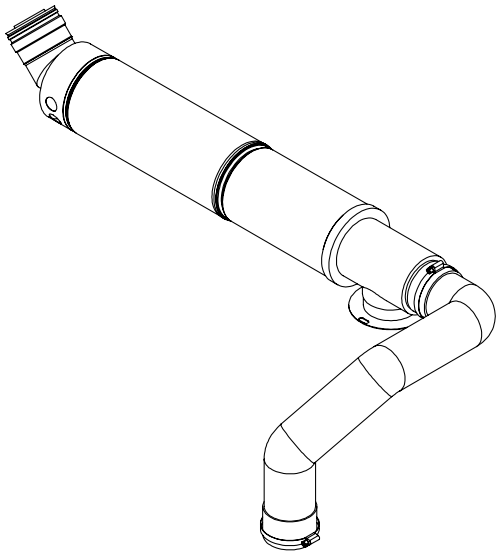

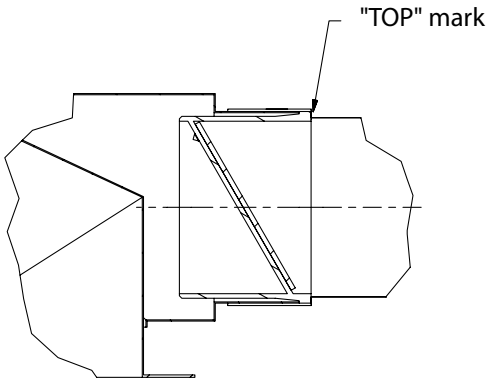

Correct position of flap valve

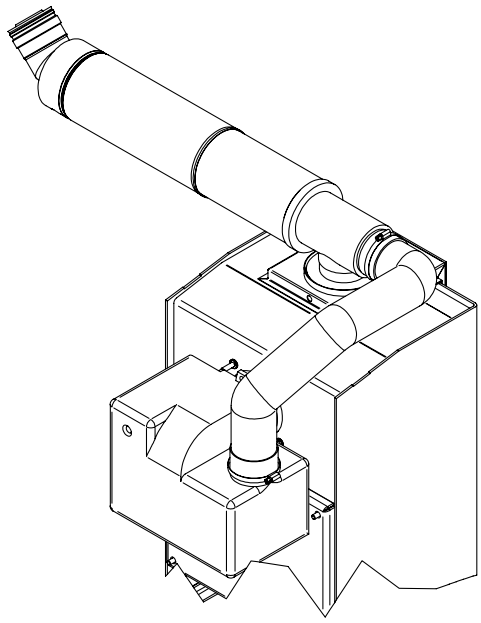

1. Push the flap valve into the balanced flue air intake.
2. Ensure that the flap valve is in the correct position.
3. Push the snorkel hose over the flap valve and air intake and secure with a jubilee clip.
4. Attach the other end of the snorkel hose to the burner with jubilee clip.

TECHNICAL DETAILS

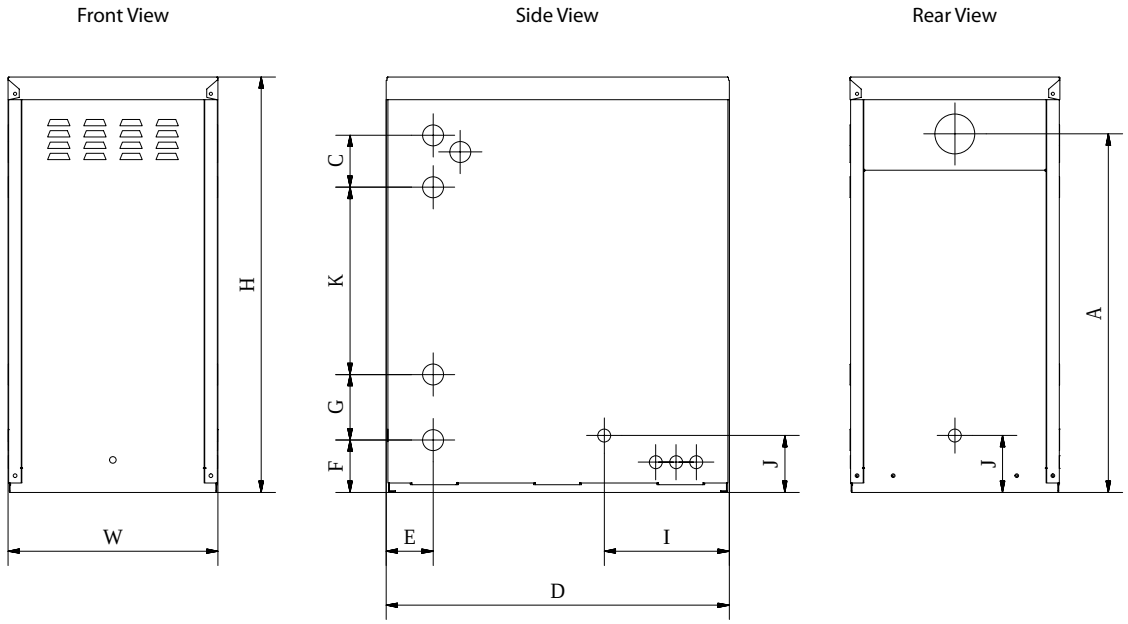

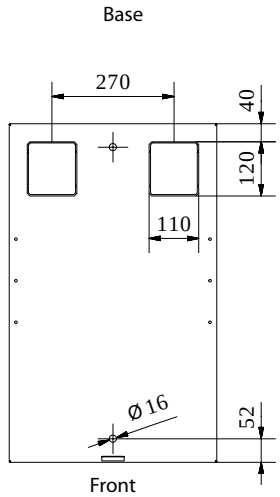

Model - Slimline Systempac Envirogreen (output range)	Weight kg	Dimensions (mm)										
		H	W	D	A	C	E	F	G	I	J	K
Envirogreen Slimline Systempac 12-20kW	147	920	465	760	794	115	104	116	145	277	126	415
Envirogreen Slimline Systempac 20-26kW	150	920	465	760	794	115	104	116	145	277	126	415
Envirogreen Slimline Systempac 26-35kW	153	920	465	760	794	115	104	116	145	277	126	415

5.3 SLIMLINE SYSTEMPAC - TECHNICAL DETAILS

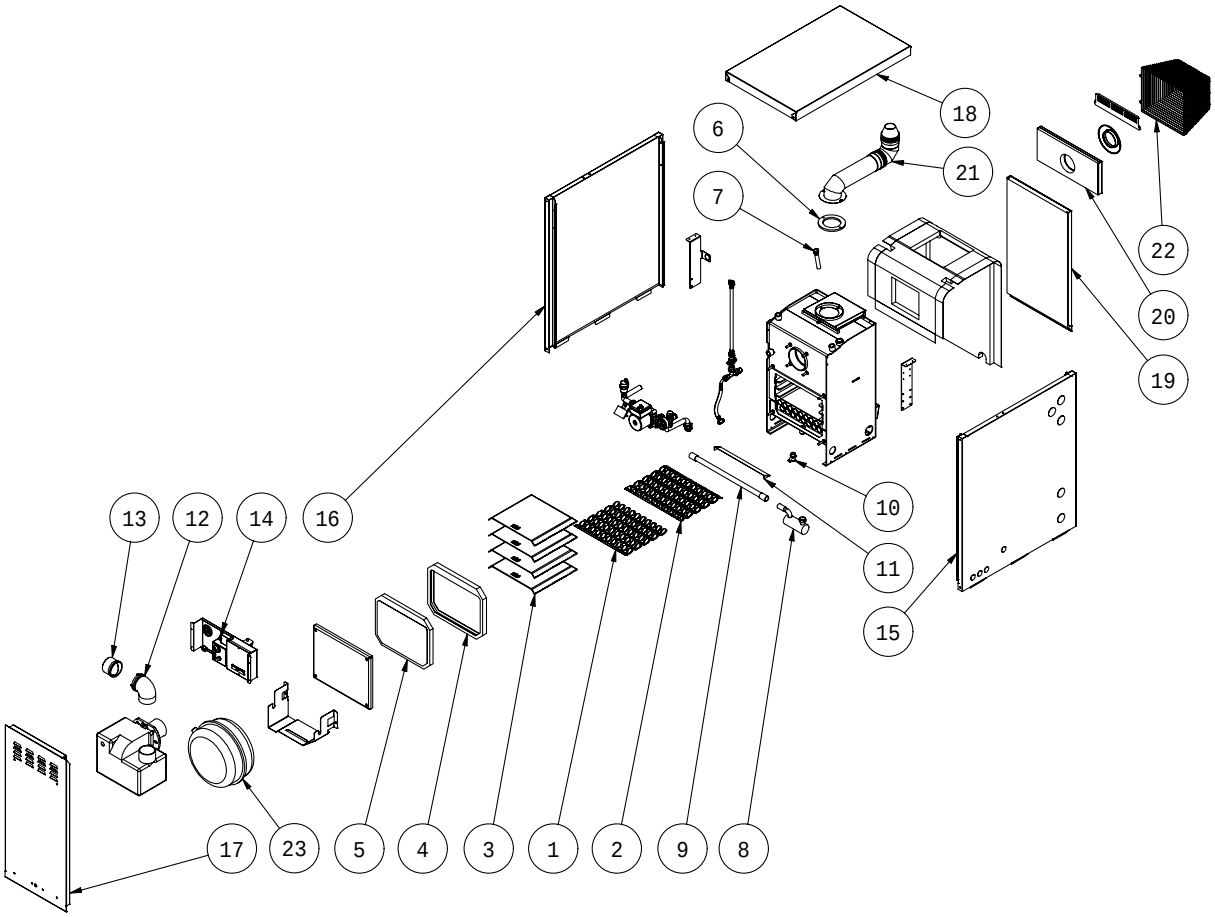

No.	Qty	Description	12-20 kW	20-26 kW	26-35 kW
1	4	Tube baffle	BA110907	BA110907	BA110907
2	5	Tube baffle single	BA110908	BA110908	BA110908
3	4	Smoke baffle	BA212022	BA212028	BA212122
4	1	Door seal	ACC035GRA	ACC035GRA	ACC035GRA
5	1	Door duroboard	ACC035GSK	ACC035GSK	ACC035GSK
6	1	Flue gasket	ACC000FRG	ACC000FRG	ACC000FRG
7	1	Stat pocket	ACC003PKT	ACC003PKT	ACC003PKT
8	1	Condensate trap	ACC000TRP	ACC000TRP	ACC000TRP
9	1	Condensate hose	ACC000FLX	ACC000FLX	ACC000FLX
10	1	Drain cock	ACC012DRC	ACC012DRC	ACC012DRC
11	1	Heat deflector	ACC000HTD	ACC000HTD	ACC000HTD
12	1	Flap valve adapter	ACC000FVA	ACC000FVA	ACC000FVA
13	1	Flap valve	ACC000FLP	ACC000FLP	ACC000FLP
14	1	Control panel	ACP011SLM	ACP011SLM	ACP011SLM
15	1	Casing right side	ACP002SLM	ACP002SLM	ACP002SLM
16	1	Casing left side	ACP003SLM	ACP003SLM	ACP003SLM
17	1	Casing front	ACP004SLM	ACP004SLM	ACP004SLM
18	1	Casing top	ACP005SLM	ACP005SLM	ACP005SLM
19	1	Casing back	ACP006SLM	ACP006SLM	ACP006SLM
20	1	Casing flue outlet	ACP106SLM	ACP106SLM	ACP106SLM
21	1	Flue kit	HPF035SLM	HPF035SLM	HPF035SLM
22	1	Terminal guard	ACC000CTG	ACC000CTG	ACC000CTG
23	1	Pressure vessel	ACC012PVL	ACC012PVL	ACC012PVL

For burner parts refer to burner manual

TECHNICAL SPECIFICATION

HEAT OUTPUT kW	12-35		
CONNECTIONS	-		
Heating Flow	22 mm dia.		
Heating Return	1" BSP		
Mains Cold Feed (Copper)	15 mm dia.		
Drain Off Valve	½" BSP		
Safety Pressure Valve Outlet (Copper)	15 mm dia.		
Condensate Trap	22 mm dia. plastic pipe		
CIRCULATING PUMP	25/60		
Integral Expansion Vessel Normal Capacity	12 litres		
Expansion Vessel Pre-charge Pressure	1 bar		
Low Pressure Water Switch?	✔		
Filling Loop Included?	✔		
WATER CONTENT	-		
Boiler	24 litres		
FLUE (INDOOR BOILERS)	-		
Balanced Flue Assembly	125 (5") mm dia.		
Max. Low Level Flue Length	1.5m		
Max. High Level Balanced Flue Length	6m		
HEATING SYSTEM (SEALED)	Fit in accordance with BS 7074 Part 1, BS 5449, OFTEC standards and all other relevant legislation.		
Max. Operating Pressure	2 bar		
Max. System Pressure Cold	1.5 bar		
Min. System Pressure Cold	0.5 bar		
Preset Pressure Relief Valve	3 bar		
WATER SIDE RESISTANCE			
Flow Rate To Give A Nominal Output At 10K Differential	**12-20kW**	**20-26kW**	**26-35kW**
Flow Rate Measured	1642 kg/h	2135 kg/h	2874 kg/h
Waterside Resistance	0.18 mbar	0.18 mbar	0.18 mbar
Flow Rate To Give A Nominal Output At 20K Differential	**12-20kW**	**20-26kW**	**26-35kW**
Flow Rate Measured	870 kg/h	1131 kg/h	1523 kg/h
Waterside Resistance	0.19 mbar	0.19 mbar	0.19 mbar

COMMISSIONING

- **It is the responsibility of the installer to ensure that the boiler is properly commissioned when first used.**
- **The boiler should be commissioned by a competent, qualified engineer, preferably OFTEC registered and familiar with Firebird products.**
- **The installation certificate and the commissioning certificate within the Boiler Passport should be completed and posted to Firebird within 28 days of installation (this can also be done online on the Firebird website). A copy should be retained by the commissioning engineer.**
- **The system should be checked thoroughly.**

CHECKLIST FOR INSTALLING AND COMMISSIONING A FIREBIRD BOILER

Pre-installation check:
- Is the following documentation included with the boiler: installation manual, boiler passport, burner manufacturer's manual?
- Is the base on which the boiler is to be installed solid?
- Allow sufficient room for future servicing of the boiler.

Where does the flue terminate:
- Make sure there is no window, door or fence within 1 metre of the flue-terminal.
- If the flue terminates in a corner or into an allyway, re-circulation of the combustion gases in the air intake could occur. A plume dispersal may be required or an alternative flue arrangement might be available. Contact the Firebird technical department for advise.
- The appropriate class 1 flue must be used with a conventional flue installation. Contact Firebird if unsure.

Power supply:
- Is a timed, permanent, power supply available, via a fused spur with a 230V 50Hz mains electrical supply and a 5A fuse?

Liquid fuel supply:
- The burner is set for 28 Second Class C2 fuel.
- A 15 micron oil filter should be placed in line with an isolating valve prior to entry to the burner.
- There must be a remote sensing fire valve.
- Verify that the fuel tank has been installed correctly as per building standards.

Boiler check:
- Baffles should be checked as they may have been disturbed during transport.
- Check that the condensate trap is fitted securely, primed with water and piped out into a suitable drain. It is easier to check the trap when the boiler door is removed.
- The boiler door should be refitted, complete with graphite seal and then tightened.

Flue check:
- The flue must be fitted correctly, with a fall back to the boiler. Note: internal fall of 2.5˚ within the flue.
- For concentric balanced flue:
  - the cone supplied should be inserted in to the end of the flue;
  - the wall plate should be fitted with an opening for air under the flue;
  - check that the flue guard is fitted.
- When installing a Systempac or Slimline Systempac, the 90˚ bend should be fitted pointing up.

Please refer to burner manual for the following sections:
- Boiler set-up.
- Burner settings.
- Flue gas analysis and fine tuning of burner.

HANDING OVER

The householder should receive:
- A clear and concise demonstration of the boiler operation and any system controls.
- This manual, the burner manufacturer's manual and any other instructions.
- OFTEC forms CD10 and CD11.
- The Boiler Passport.

The householder should be advised to:
- Service the boiler annually and to ensure that the service records in the Boiler Passport are completed.
- Read the terms and conditions of warranty.
- Keep all boiler documentation in a safe place.

A commissioning record should be completed and a copy retained by the Engineer. This can be found in the Boiler Passport.

Annual servicing must be carried out by a competent, qualified engineer, preferably OFTEC registered and familiar with Firebird products.

Do not commence service until both the electrical and fuel supply to the boiler have been safely isolated.

THE FUEL TANK

Check for oil leaks. Draw off any accumulated water and sludge from the tank by opening the drain valve. Turn off the liquid fuel supply, remove the filter bowl and wash the element clean with Kerosene.

THE BOILER

Remove combustion access door for access to baffles and to clean heat exchanger.

Cleaning a Firebird condensing boiler:

1. Remove all baffles, including the tubular baffles in the condensing section and clean them.

2. Remove the condensate trap and clean it, place a tray under the connection for the trap. Vacuum out any loose debris from the chamber.

3. Clean the inside of the boiler with a vacuum cleaner.

4. Refit all the baffles and the condensate trap securely.

5. System pressure should not exceed 2 bar at full operating temperature. The expansion vessel should be checked during the annual service to ensure that it is operating correctly.

Check insulation sealing and the silver foil lining in combustion access door - replace if necessary. Check graphite seal and replace if necessary. When refitting this door be careful not to damage the foil and insulation by over tightening.

Check that the condensate trap is secure in position, clean and free of combustion debris. Ensure that the condensate drain is free and not blocked.

Expansion vessel pre-charge pressure should be checked annually and set according to the system design.

THE BURNER

Please refer to the burner manual for specification and combustion check information.

Ensure service is recorded in the Boiler Passport.

Firebird products are designed and manufactured to give many years of trouble free service.

The terms laid down in the warranty must be adhered to

- Firebird provides a comprehensive, conditional warranty of 5 years on the boiler shell and 2 years on all other parts from date of installation, provided installation has occurred within 12 months from date of purchase.
- The 5 year boiler shell warranty consists of parts and labour for the first 3 years and parts only for years 4 and 5.
- The warranty will only apply if the boiler is commissioned by a competent, qualified engineer, preferably OFTEC registered and is serviced annually thereafter.
- Please ensure that the commissioning certificate within the Boiler Passport is fully completed by a competent, qualified engineer, preferably OFTEC registered and is returned to Firebird within 28 days of complete installation and commissioning. The Boiler Passport is included with every boiler and can also be completed online at the following link: http://www.firebird.ie/index.php/boiler-passport.html.
- Correct commissioning will ensure that your boiler is set to operate at its maximum fuel efficiency.
- Consumable components, the nozzles and the oil hose are excluded.

TERMS & CONDITIONS OF WARRANTY

1. Warranty implies that the product shall be free from defective parts or workmanship for a period of warranty cover, which begins from the date of installation.
2. All claims under the warranty programme must be within the time limits stated on the left.
3. Installation and commissioning of the product must be in accordance with (a) instruction/technical manuals (b) all relevant standards and codes of practice.
4. A competent, qualified engineer, preferably OFTEC registered, using the correct installation and test equipment must carry out installation and commissioning.
5. This warranty does not cover special, incidental or consequential damages, injury to persons or property, or any other consequential loss.
6. Servicing of the boiler is to be carried out annually to maintain the manufacturer's warranty.
7. Firebird accepts no liability in respect of any defect arising from incorrect installation, negligence, fair wear and tear, misuse, alteration or repair by unqualified persons.
8. Firebird will not accept any liability in respect of any defect occurring to the product due to limescale build-up and or low return water temperature.
9. The warranty programme extends to reasonable labour costs EXCEPT in the case of a 5 year warranty period whereby any valid claim made after 3 years will not include labour costs.
10. Firebird's prior authorisation must be obtained before examination or repair of the product takes place.
11. Firebird will examine all claims made under the warranty programme and for any claims that are deemed invalid, the costs incurred will be borne by the owner.
12. The warranty programme only applies where the product was used for normal domestic heating purposes.
13. Any defective part removed under any or all of the warranty programmes MUST be returned to Firebird.
14. If this appliance is installed in a pressurised system, failure to correctly size the expansion vessel may damage the boiler and invalidate the warranty
15. A full set of warranty conditions and terms can be found on the Firebird website.

STATUTORY RIGHTS OF THE OWNER ARE NOT AFFECTED BY THIS WARRANTY

ErP A Rated

Model Identifier	Energy efficiency class	Rated heat output	Seasonal Efficiency Base Model	Annual energy consumption	Sound power level
		kW	%	GJ	dB
ENVIROGREEN SYSTEM					
12-20kW	A	20	93	50	46
20-26kW	A	26	93	71	47
26-35kW	A	35	92	95	52
36-44kW	A	44	94	123	N/A
ENVIROGREEN SYSTEMPAC					
12-20kW	A	20	93	50	N/A
20-26kW	A	26	93	71	N/A
26-35kW	A	35	92	95	N/A
36-44kW	A	44	94	123	N/A
ENVIROGREEN SLIMLINE SYSTEMPAC					
12-20kW	A	20	93	50	N/A
20-26kW	A	26	93	71	N/A
26-35kW	A	35	92	95	N/A

UK
Firebird Products Ltd
Phoenix House
Eastern Wood Road
Langage Industrial Estate
Plympton
Plymouth PL7 5ET

T: 01752 691177
F: 01752 691131
E: sales@firebird.uk.com

www.firebird.uk.com

Ireland
Firebird Heating Solutions Ltd
Baile Mhic Íre
Co. Cork
P12 HK51
Ireland

T: +353 (0)26 45253
F: +353 (0)26 45309
E: info@firebird.ie

www.firebird.ie

This brochure was correct at the time of going to print. However, Firebird's policy is one of continuous development. The right is reserved to change specifications, colour, and prices of the models and items illustrated and described in the publication at any time. Whilst every care has been exercised in the production of this brochure, Firebird cannot accept any liability for errors or omissions. For current details always consult Firebird Products Ltd.