221680G.11.00

Glow-worm

Instructions for Use
Installation and Servicing

To be left with the user

COMPACT 100p

G.C. No. 47 047 05A

Fanned Flue Combination Boiler

With Honeywell gas control

benchmark™

This is a Cat I_{2H} Appliance

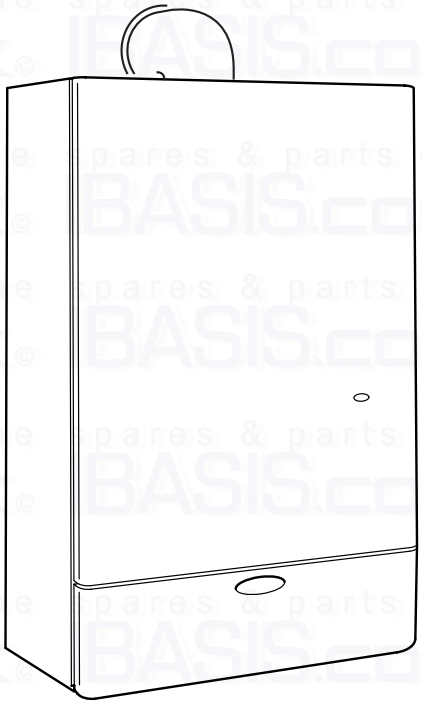

The instructions consist of three parts, User, Installation and Servicing Instructions, which include the Guarantee Registration Card. The instructions are an integral part of the appliance and must, to comply with the current issue of the Gas Safety (Installation and Use) Regulations, be handed to the user on completion of the installation.

Guarantee Registration

Thank you for installing a new Glow-worm appliance in your home.

Glow-worm appliances' are manufactured to the very highest standard so we are pleased to offer our customers' a Comprehensive First Year Guarantee.

In the centre pages are to be found your Guarantee Registration Card, which we recommend you complete and return as soon as possible.

If this card is missing you can obtain a copy or record your registration by telephoning the Heatcall Customer Service number 01773 828100.

Our Guarantee gives you peace of mind plus valuable protection against breakdown by covering the cost of:

- ***All replacement parts***
- ***All labour charges***
- ***All call-out charges***

REGISTER YOUR GLOW-WORM APPLIANCE FOR 1ST YEAR GUARANTEE PROTECTION

CALL 0208 247 9857

HEATCALL

One Contact Local Service

Customer Services:
Tel: (01773) 828100
Fax: (01773) 828070

Hepworth Heating Ltd.,
Nottingham Road, Belper, Derbyshire. DE56 1JT
General/Sales enquiries:
Tel: (01773) 824141 Fax: (01773) 820569

Important Information

Testing and Certification

This boiler is tested and certificated for safety and performance. It is therefore important that no alteration is made to the boiler, without permission, in writing, from Hepworth Heating Ltd.

Any alteration not approved by Hepworth Heating Ltd., could invalidate the certification, boiler warranty and may also infringe the current issue of the Statutory Requirements, see Section 1.4.

CE Mark

This boiler meets the requirements of Statutory Instrument No. 3083 The boiler (Efficiency) Regulations, and therefore is deemed to meet the requirements of Directive 92/42/EEC on the efficiency requirements for new hot water boilers fired with liquid or gaseous fuels.

Type test for purposes of Regulation 5 certified by: Notified body 0086.

Product/production certified by: Notified body 0086.

The CE mark on this appliance shows compliance with:

1. Directive 90/396/EEC on the approximation of the laws of the Member States relating to appliances burning gaseous fuels.
2. Directive 73/23/EEC on the harmonization of the Laws of the Member States relating to the electrical equipment designed for use within certain voltage limits.
3. Directive 89/336/EEC on the approximation of the Laws of the Member States relating to electromagnetic compatibility.

Substances Hazardous to Health

The adhesives and sealants used in this appliance are cured and give no known hazard in this state.

INSULATION PADS/CERAMIC FIBRE, GLASSYARN, MINERAL WOOL
These can cause irritation to skin, eyes and the respiratory tract.
If you have a history of skin complaint you may be susceptible to irritation. High dust levels are usual only if the material is broken.
Normal handling should not cause discomfort, but follow normal good hygiene and wash your hands before eating, drinking or going to the lavatory.
If you do suffer irritation to the eyes or severe irritation to the skin seek medical attention.

CONTENTS	DESCRIPTION	SECTION	PAGE No.
INSTRUCTIONS FOR USE	Introduction		3
	Clock Settings		4
	Lighting the Boiler		5
INSTALLATION INSTRUCTIONS	General Data	1	7
	Boiler Location	2	9
	Flue and Ventilation	3	10
	Heating System	4	11
	Domestic Hot Water System	5	12
	Installation Preparation and Gas/Water Connections	6	13
	Flue Preparation	7	14
	Mounting the Boiler and Flue Fitting	8	16
	Electrical Connections	9	18
	Commissioning	10	20
SERVICING INSTRUCTIONS	General Data	11	23
	Servicing	12	23
	Fault Finding	13	24
	Replacement Parts	14	32
	Spare Parts	15	43

Instructions for Use

Introduction

Please read these instructions and follow them carefully for the safe and economical use of your Combination boiler.

This boiler must have been installed by a competent person in accordance with the current rules in force in the countries of destination at the time of installation.

Once the controls are set, the boiler is automatic in operation.

The Compact combination boiler is able to provide room heating as part of a central heating system and domestic hot water direct from the cold water supply, without the need for secondary storage.

The boiler can be fitted with one of two makes of clock, which look like this:-

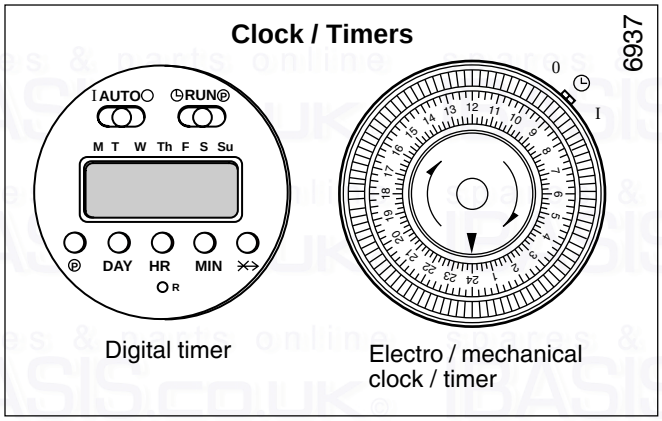

IMPORTANT NOTICE:

This boiler is for use only on G20 gas.

Gas Leak or Fault

If a gas leak or fault exists or is suspected, turn the boiler off and consult your local gas company or your local installation/ servicing company.

Domestic Hot Water Temperature

NOTE. The mains incoming water temperature in the winter is lower than in the summer.

The water temperature is factory preset and can not be adjusted.

To achieve the same outlet water temperature in the winter, it will be necessary to reduce the water flow rate using the hot water tap.

Boilers Installed in Compartments

If the boiler has been fitted into a compartment or cupboard, do not obstruct the compartment air supply vents.

Do not use the compartment for storage.

Electrical Supply

WARNING. The boiler must be earthed.

The boiler must be connected to a 230V~50Hz permanent supply.

Connection of the whole electrical system of the boiler and any heating system controls to the electrical supply, must be through one common isolator.

Isolation should preferably be by a double pole switched fused spur box. The fused spur box should be readily accessible and preferably adjacent to the appliance. It should be identified as to its use.

Alternatively a fused 3A 3 pin plug and shuttered unswitched socket may be used.

The colours of three core flexible cable are, blue - neutral, brown - live, green and yellow - earth.

As the markings on your plug may not correspond with these colours continue as follows:-

The wire coloured blue must be connected to the terminal marked “N” or “Black”.

The wire coloured brown must be connected to the terminal marked “L” or “Red”.

The wire coloured green and yellow must be connected to the terminal marked “E” or “Green” or the earth symbol ⏚ .

PVC flexible cable having a conductor size of 0.75mm^2 (24/ 0.20mm) must be used within the boiler casing to connect to the boiler.

Electrical Supply Failure

The boiler will not work without an electrical supply.

Normal operation of the boiler should resume when the electrical supply is restored.

If the power is off, except for short controled periods, turn off the pilot.

Note. The boiler safety cutoff may have operated, please refer to the following section to reset.

Reset any external controls, to resume normal operation of the central heating.

The digital timer, has a lithium battery back up and will not need resetting. Unless it is without power for a considerable period.

Boiler Safety Cut-off Device

The boiler is fitted with a safety cutoff device to prevent damage through overheating.

Should the main burner and pilot go out, for no apparent reason, during normal use, allow the boiler and system to cool down (waiting at least a minimum of four minutes), relight the boiler as described in "To light the boiler".

If the problem persists, turn the boiler off and consult your installation/ servicing company.

The Gas Safety (Installation & Use) Regulations

In your interests and that of safety it is the law that ALL gas appliances are installed by competant persons in accordance with the current issues of the above regulations.

Setting Instructions for Electro/mechanical Clock - if fitted

This clock has a twenty four hour dial, that is, 1pm is 13.

To set the time, turn the whole face clockwise until the pointer is against the time of day.

To set any “Off” time, push the tappets outwards.

To set any “On” time, push the tappets inwards.

Time can be set either “On” or “Off” in fifteen minute segments.

Note. The clock supplied could be fitted with an override device, see diagram 1, which switches the clock programme “On” or “Off” permanently.

The switch will need to be repositioned to resume programmed working.

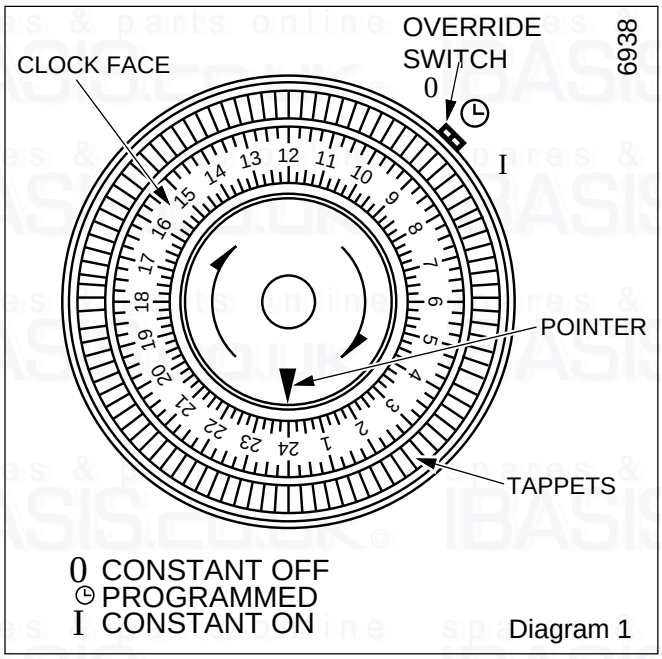

Diagram 1

Setting Instructions for the 7 Day Digital Clock/Timer

This is a 24 hour clock/timer, that is 1pm is 13:00, and has 8 “ON” and 8 “OFF” daily switching actions.

It is fitted with a lithium battery back up which protects the programme in the event of an electrical failure. The battery should have a life of several years.

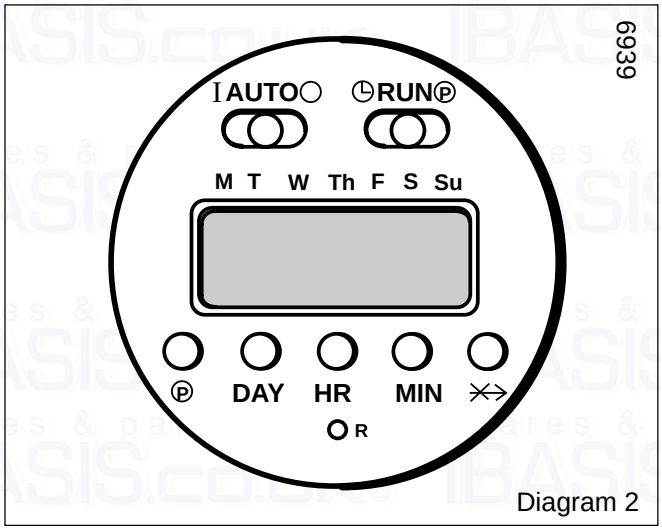

Diagram 2

Setting the Clock - diagram 2

1. With both AUTO and RUN switches set to the central position, press R reset button, the display will flash.
2. Set RUN switch to .
3. Set day of week by pressing button DAY.
4. Set time of day by pressing buttons HR and MIN.
5. Set RUN switch to the central position, colon will flash, this indicates the clock is set.

With the clock set, the factory preset programme shown below will operate.

MON/FRI		SAT/SUN	
ON -	06:30	ON -	07:00
OFF -	08:30	OFF -	09:00
ON -	16:30	ON -	16:00
OFF -	22:30	OFF -	23:00

Setting Timed Programmes

With the clock set to the correct time, see SETTING THE CLOCK paragraphs 1-4, and then continue as follows:

1. Set RUN switch to P, the display will indicate the 1st (ON) preset programme and the symbol .
2. Set day of week to be programmed by pressing the DAY button.

   Note: The days can be selected individually or as groups:

   Mon-Fri., Mon-Sat., Mon-Sun., Sat/Sun.

   An arrow will be displayed under the day or days selected.
3. Set time of day by pressing the buttons HR and MIN.
4. Press button P to confirm programmes, the display will indicate the 2nd (OFF) preset programme and subsequently, 3rd, 4th, 5th, 6th, 7th, 8th.
5. Repeat procedures 2, 3 and 4 until desired programmes are set.

   Note. It is not a requirement to use the 8 on/off programmes.
6. Set the RUN switch the central position, your appliance will now operate at the programmed times.

General Notes.

With the AUTO switch in the I position the central heating will operated constantly ON.

With the AUTO switch in the O position the central heating will not operate.

Soft Override button indicated by the symbol , this function will override the current central heating programme for the next available.

ON time programmes are indicated by the symbol .

To Light the Boiler

1. Check that all four isolating valves are open, the levers in line with the valve body, see diagram 3.

2. Open the controls cover door and familiarize yourself with the controls, see diagram 4.

3. CAUTION. A sealed pressurised system must be filled and pressurised by a competent person.

Only operate the boiler when you are sure that the system has been filled and pressurised. Check this by looking at the pressure gauge “A”, it should read 0.7bar minimum.

4. Open a hot water tap, check that water flows, then close it.

5. If you are in any doubt about the boiler being filled with water contact your installation/servicing company or the local gas company.

6. Fully press and hold down the control knob “C”. Press and release the piezo button “D” until the pilot burner lights, view through window in the front case. When the pilot burner is lit, keep control knob “C” pushed in for a further 15 seconds then release. The pilot should remain alight.

7. IF THE PILOT GOES OUT NOW, OR ON ANY OTHER OCCASION, A SAFETY DEVICE PREVENTS IMMEDIATE RELIGHTING. WAIT AT LEAST FOUR MINUTES BEFORE ATTEMPTING TO RELIGHT.

8. If the pilot burner fails to remain alight, repeat instruction 11. but now hold down the control knob “C” for a little longer after the pilot has lit.

9. Check the pilot is alight and stable.

10. Switch ON the electrical supply to the boiler at the external isolator.

11. Set the switch “K” to ON 1 situated on the control fascia.

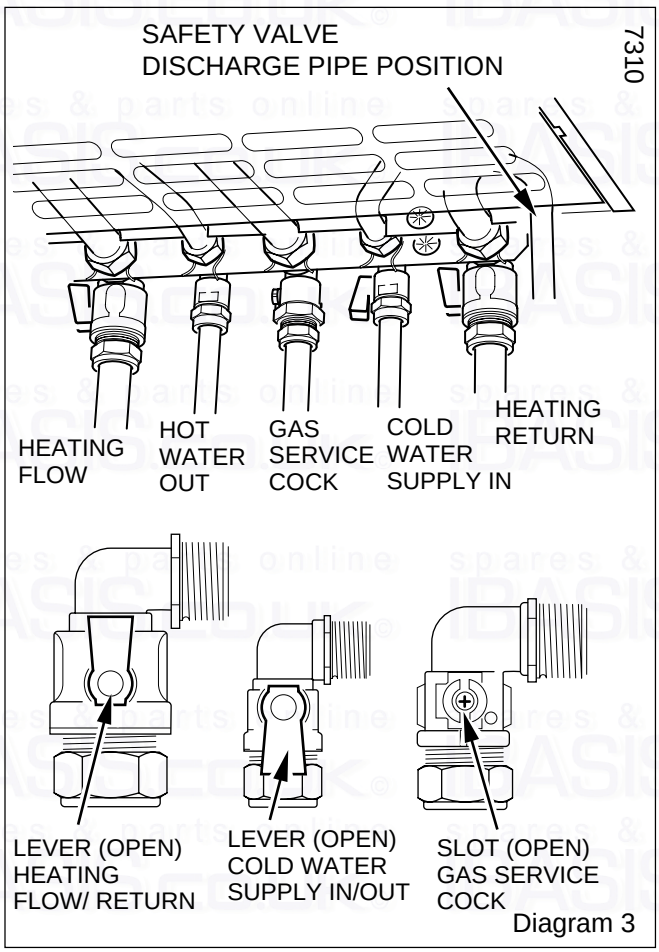

Diagram 3

12. Check the light “E” is illuminated on the control fascia.

13. Set the summer / winter button “J”, light “H” or “F” will illuminate.

14. Set “B”, clock/timer (if fitted) and any remote controls as required.

For central heating operation set button “J” to “On” . The main burner will ignite. Light “F” will illuminate.

Close the controls cover door.

To Turn the Boiler Off

For short periods only set switch “K” to 0 . Turn off pilot light.

To turn the boiler off, turn the control knob “C” in the direction of the arrow clockwise.

To turn on again following the "To light the boiler" instructions.

Water Temperatures

NOTE. The mains incoming water temperature in the winter is lower than in the summer.

To achieve the same outlet water temperature in the winter, it will be necessary to reduce the water flow rate using the hot water tap.

Summer / Winter Selector Button

For central heating set button “J” to Winter light “F” will illuminate. The main burner will light.

When the heating is controlled by a room thermostat and/or a time switch, button “J” must be set to Winter light “F” will illuminate.

If a hot water tap is opened while the boiler is on for heating, priority will be given to hot water.

Maintenance and Servicing

To ensure the continued efficient and safe operation of the appliance it is recommended that it is checked and serviced as necessary at regular intervals. The frequency of servicing will depend upon the particular installation conditions and usage, but in general once a year should be enough.

If this appliance is installed in a rented property there is a duty of care imposed on the owner of the property by the current issue of the Gas Safety (Installation and Use) Regulations, Section 35.

Servicing/maintenance should be carried out by a competent person in accordance with the rules in force in the countries of destination.

To obtain service, please call your installer or Heatcall (Glow-worm’s own service organisation) using the telephone number behind the controls cover door.

Please be advised that the ‘Benchmark’ logbook should be completed by the installation engineer on completion of commissioning and servicing.

All CORGI Registered Installers carry a CORGI ID card, and have a registration number. Both should be recorded in your boiler Logbook. You can check your installer is CORGI registered by calling CORGI direct on :- 01256 372300.

Clearances

The boiler requires a clearance in front, below and at the sides of the casing for safety, servicing and maintenance access, see diagram 2.1.

Protection Against Freezing

If the boiler is to be out of use for any long periods during severe weather, it is recommended that the whole system, including the combination boiler, should be drained to avoid the risk of freezing.

If in doubt, contact you installation/servicing company for advice.

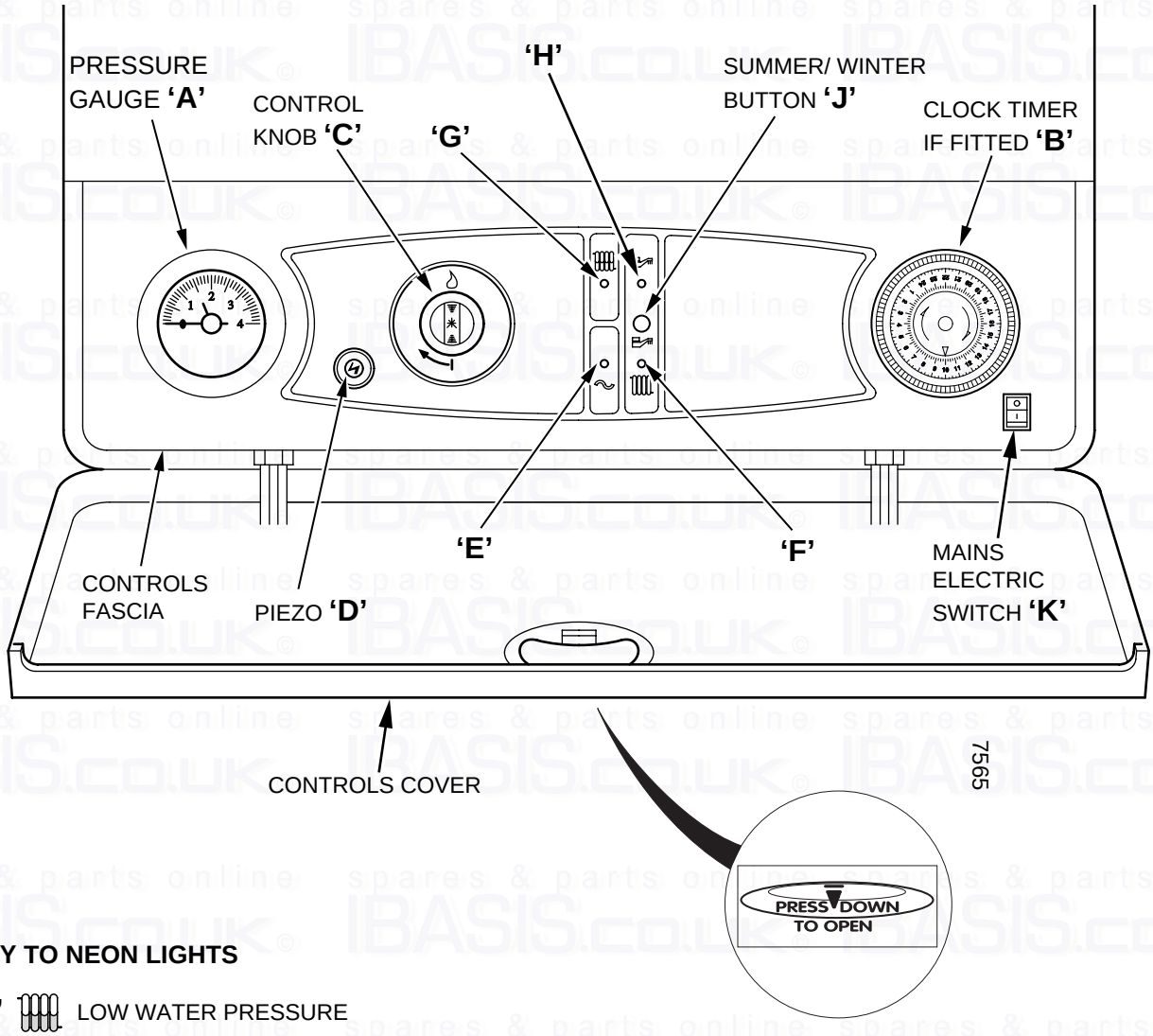

KEY TO NEON LIGHTS

'G' LOW WATER PRESSURE

'H' SUMMER SETTING **(HOT WATER OPERATION ONLY)**

'F' WINTER SETTING **(HOT WATER AND CENTRAL HEATING OPERATION)**

'E' POWER 'ON'

Diagram 4

Draining and Filling

CAUTION. This boiler works in a pressurised system which must only be drained, refilled and pressurised by a competent person.

Note: If the pressure gauge indicates a loss of system pressure, that is, less than 0.7bar, YOU MUST CONTACT YOUR INSTALLER.

Pressure Relief Safety Valve

CAUTION. A pressure relief safety valve and discharge pipe is fitted to the boiler. This valve must not be touched. Should there be any discharge from the pipe, turn the boiler off, isolate from the electrical supply and contact your installation/servicing company. The outlet should be kept clear

Cleaning

WARNING. This appliance contains metal parts (components) and care should be taken when handling and cleaning with particular regard to edges.

The boiler casing can be cleaned using a mild liquid detergent with a damp cloth, then a dry cloth to polish.

Do not use any form of abrasive or solvent cleaner as you may damage the paint work

Boiler Casing

CAUTION. Do not remove or adjust the casing in any way, as incorrect fitting may result in incorrect operation or failure to operate at all. If in doubt seek advice from the local gas company or your installation/servicing company.

Replacement Parts

If replacement parts are required apply to your local supplier or British Gas.

Please quote the name of the appliance.

1 General Data

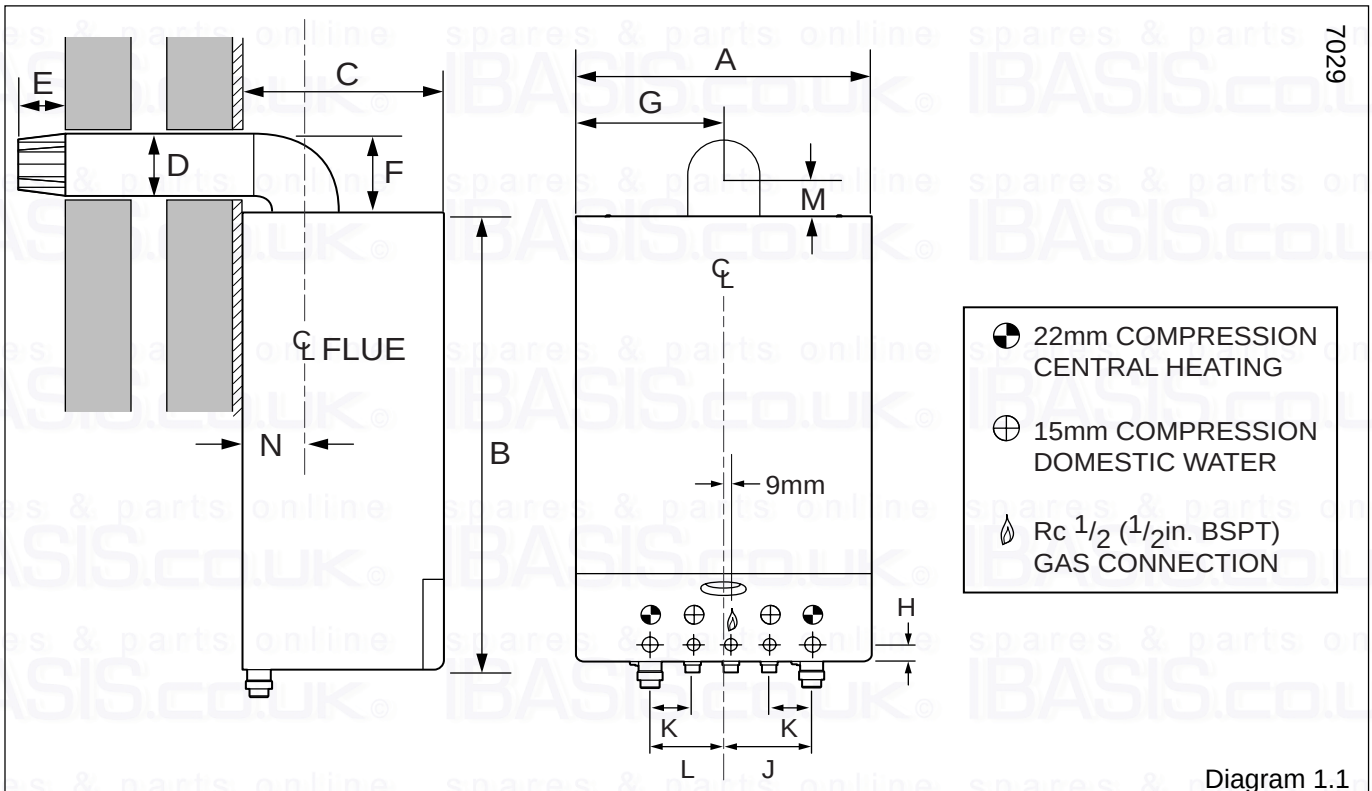

Diagram 1.1

A	B	C	D	E	F	G	H	J	K	L	M	N
450	700	300	100	75	128	225	18	135	65	110	80	144

TABLE 1

Lift Weight	33.4kg (73.63b)
Total Weight	42.8kg (94.36lb)
Gas connection	Ø 15mm compression
Heating and return	Ø 22mm compression
Domestic hot water	Ø 15mm compression
Safety valve	Preset 3bar (43.5lbf/in²)
Safety valve discharge	Ø 15mm copper
Water content	1.66 litres (0.37 gallon)
■ **Expansion vessel capacity**	6 litres (1.32 gallons)
Heating cold fill pressure minimum	0.7bar (10.1lbf/in²)
✻ **D.H.W working pressure**	0.8 to 10bar
■ **Maximum Heating system water content using fitted expansion vessel.**	60 litres (13.2 gallons) with a cold fill pressure of 0.7bar
Electrical supply	230V~50Hz
Electrical rating	154W fused 3A
Internal Fuse rating	F1) Type T2A F2) Type T315mA

✻ Boiler starts at an inlet pressure of 0.5bar but requires 0.8bar for maximum output.

■ For larger systems use an additional expansion vessel, see Section 4.

1.1 Installation

Materials and equipment should be fit for their purpose and of suitable quality and workmanship.

1.2 Important Notice

This boiler is for use only on natural gas, G20.

1.3 Sheet Metal Parts

WARNING. When installing or servicing this boiler care should be taken when handling the edges of sheet metal parts to avoid any possibility of personal injury.

1.4 Requirements

The installation of this boiler must be carried out by a competent person in accordance with the current rules in force in the countries of destination at the time of installation.

Manufacturer's instructions, supplied.

Manufacturer's instructions must not be taken as overriding statutory requirements.

1.5 Data Label

The data label is on the inner case cover, see diagram 1.2.

1.6 Data

See table 1 and diagrams 1.1, 1.2 & 1.3.

The Seasonal Efficiency Domestic Boilers UK (SEDBUK) is 71.6%.

The value is used in the UK Government's Standard Assessment Procedure (SAP) for energy rating of dwellings. The test data from which it has been calculated have been certified by B.S.I.

1.7 Gas Supply

The gas installation shall be in accordance with the rules in force in the countries of destination.

The supply from the governed meter must be of adequate size to provide a steady inlet working pressure of 20mbar (8in wg) at the boiler.

1.8 Electrical Supply

WARNING. This boiler must be earthed.

All system components shall be of an approved type.

The electrical installation shall be in accordance with the current rules in force in the countries of destination at the time of installation.

Connection of the whole electrical system of the boiler and any heating system controls to the electrical supply, must be through one common isolator.

Isolation should be by a double pole switched fused spur box, having a minimum contact separation of 3mm in each pole. The fused spur box should be readily accessible and preferably adjacent to the appliance.It should be identified as to its use.

Alternatively, a fused 3A 3pin plug and unswitched socket may be used, provided they are not used in a room containing a bath or shower.

The mains supply cable and other cables connected to the boiler must be the PVC flexible type of at least 0.75mm^2 (24/0.20mm) .

1.9 Heating System Controls

The heating system should have installed: a timer and room thermostat controlling the boiler.

Thermostatic radiator valves may be installed, however they must not be fitted in a room where the room thermostat is located.

Note: All systems must have at least one radiator not fitted with a thermostatic valve.

Note: For further information, see The Building Regulations 1991 - Conservation of fuel and power, 1995 edition - Appendix G, table 4b.

7505

Glow worm — HEPWORTHHEATINGLTD., BELPER,DERBYSDE561JT

COMPACT 100P — 457401

230V ~ 50Hz 150W Fused at 3A For use on : I_{2H}-G20 - 20 mbar This boiler is intended exclusively to be installed on a gas supply with a governed meter	TYPE : C_{12} - C_{32} NO_x Class 5 GC No. 47-047-05A CE 0086 GB IE 86/AU/582		
SPECIFIC WATER RATE 14.03 l/min.			
DOMESTIC CIRCUIT PMW = 10 bar			
HEATING CIRCUIT PMS = 2.5 bar			
G20	DHW MAX.	CH MAX.	MIN
HOT BURNER PRESSURE mbar	13.6	4.5	0.62
HEAT INPUT NETT Q = kW	32.2	19.93	10.93
HEAT OUTPUT P = kW	29.3	17.6	8.79
SERIALNo.	INJECTOR: 4.7mm 205765		

Diagram 1.2

7643

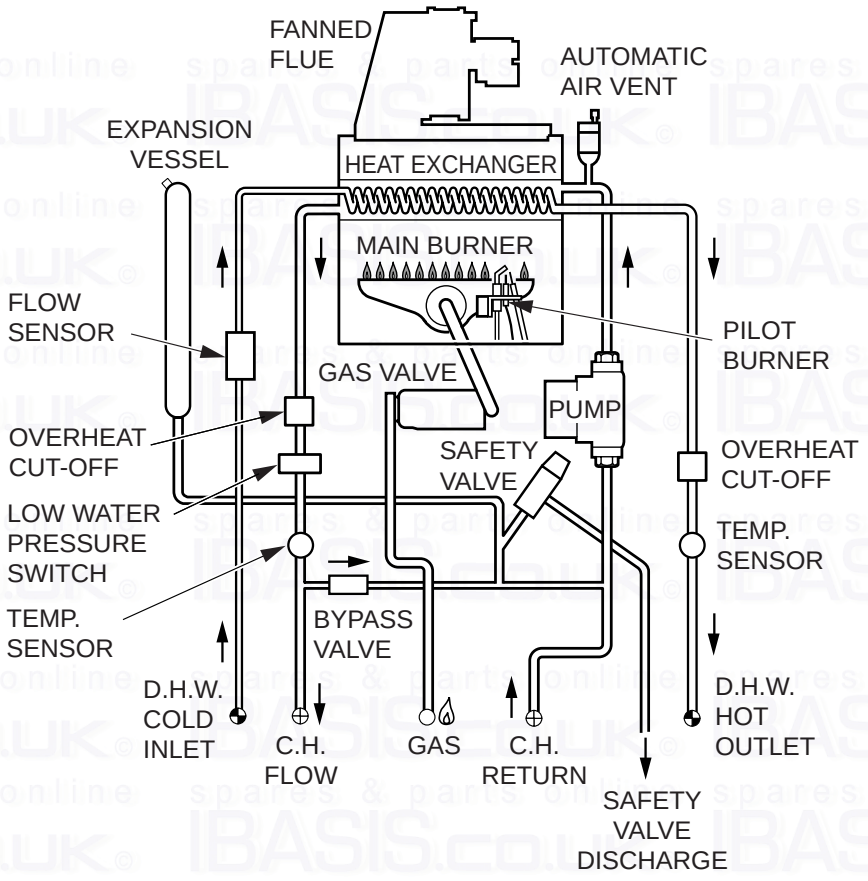

Diagram 1.3

2 Boiler Location

2.1 Location

This boiler must be installed in accordance with the rules in force in the countries of destination.

This boiler is not suitable for outdoor installation.

Any electrical switch must be positioned so that it cannot be touched by a person using the bath or shower.

The boiler must be mounted on a flat wall which is sufficiently robust to take its weight, refer to Table 1, “Data”.

If the location of the boiler or any part of the system is subject to severe cold weather conditions, it is recommended that a frost thermostat is fitted. Any part of the system that may be vulnerable to freezing must be protected.

2.2 Boilers in a Compartment

Where the installation of the boiler will be in an unusual position, the current issue of BS6798 gives detailed guidance on these requirements.

An existing cupboard or compartment modified for the purpose may be used, providing minimum clearances are maintained. Details of essential requirements for cupboard or compartment design are given in the current issue of BS6798.

The door way opening should be of sufficient size to allow for easy removal of the boiler.

Where the boiler is fitted in a cupboard or compartment, permanent ventillation is not required.

Any existing compartment air vents must not be removed or blocked off.

2.3 Clearances

The boiler should be positioned so that at least the minimum operational and servicing clearances are provided, see diagram 2.1. Additional clearances may be required around the boiler for installation.

2.4 Timber Frame Buildings

If the boiler is to be installed in a timber frame building it should be fitted in accordance with the Institute of Gas Engineers document IGE/UP/7/1998. If in doubt seek advice from the local gas undertaking or Hepworth Heating Ltd.

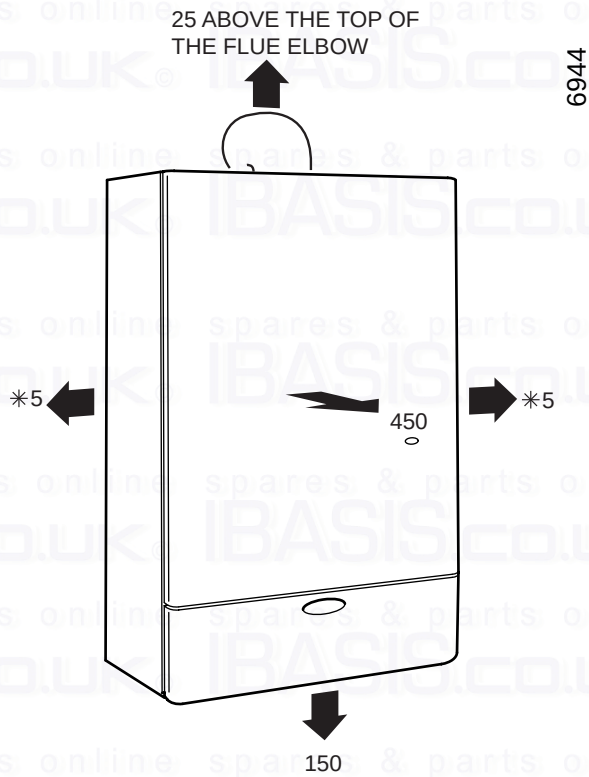

✳To achieve minimum "Installation" clearance of 5mm. The side panels will have to be fitted prior to boiler mounting.

DIMENSIONS IN MILLIMETRES

Diagram 2.1

3 Flue and Ventilation

3.1 General

The flue must be installed in accordance with the rules in force in the countries of destination.

3.2 Terminal Position

The minimum acceptable siting dimensions for the terminal from obstructions, other terminals and ventilation openings are shown in diagram 3.1.

The terminal must be exposed to the external air, the position allowing free passage of air across it at all times.

Car port or similar extensions of a roof only, or roof and one wall, require special consideration with respect to any openings, doors, vents or windows under the roof. Care is required to protect the roof if made of plastic sheeting. If the car port comprises of a roof and two or more walls seek advice from the local gas undertaking before installing the boiler.

If the terminal is fitted within 600mm below plastic guttering, an aluminium shield 1500mm long should be fitted immediately beneath the guttering or eaves. If the terminal is fitted within 450mm below painted eaves or a painted gutter, an aluminium shield 750mm long should be fitted immediately beneath the guttering or eaves.

3.3 Flue Options

There are various flue systems to choose from, as follows:

Standard Top Outlet Flue Pack - Pt.No. 230483

Extended Top Outlet Flue Pack - Pt. No. 230487

1 Metre Extension Kit - Pt. No. 230484

Optional Wall Liner Kit No. 900862

A Flue Bend Kit or Vertical Flue Kit can be supplied, see Hepworth Heating "Flue Options Guide" for configurations available.

45º Flue Bend Pack - Pt. No. 230485

90º Flue Bend Pack - Pt. No. 230486

In Line Flue Adapter Kit - Pt. No. 230488

Vertical Flue Kit No. 458115

3.4 Internal Access Flue

All flue assemblies are designed for internal installation, given that there is sufficient clearances opposite to the flue for the installation of the flue.

If there is insufficient clearance the flue can be installed from outside.

For a wall thickness up to 300mm, provided that there is sufficient space and the optional wall liner kit is used, the flue can be installed from the inside.

For a wall thickness of over 300mm the external flue hole will need to be made good from the outside, this also applies if you use the flue kit without the optional wall liner kit, irrespective of wall thickness.

3.5 Terminal Guard

A terminal guard is required if persons could come into contact with the terminal or the terminal could be subject to damage.

If a terminal guard is required, it must be positioned to provide a minimum of 50mm clearance from any part of the terminal and be central over the terminal.

The guard should be similar to that shown in diagram 3.1 .

3.6 Room Ventilation

Ventilation must be provided in accordance with the rules in force in the countries of destination. The boiler is room sealed, so where the boiler is fitted in a room or space, a permanent air vent is not required.

3.6 Cupboard/Compartment Ventilation

If the boiler is to be fitted in a cupboard or compartment. Refer to Section 2.2.

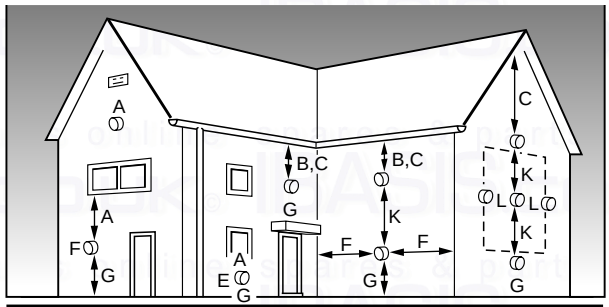

UNDER CAR PORT etc.

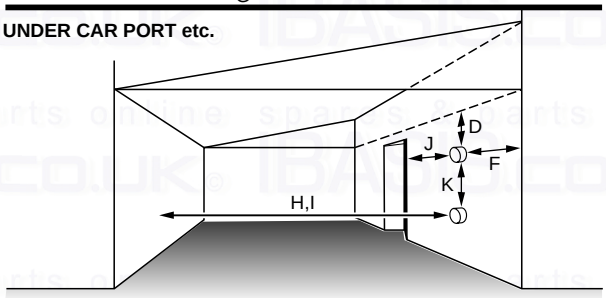

MINIMUM SITING DIMENSIONS FOR FANNED FLUE TERMINALS POSITION		MINIMUM SPACING mm
A	DIRECTLY BELOW AN OPENABLE WINDOW, AIR VENT, OR ANY OTHER VENTILATION OPENING	300
B	BELOW GUTTER, DRAIN/SOIL PIPE	25
C	BELOW EAVES	25
D	BELOW A BALCONY	25
	OR CAR PORT	200
E	FROM VERTICAL DRAIN PIPES AND SOIL PIPES	25
F	FROM INTERNAL OR EXTERNAL CORNERS	25
G	ABOVE ADJACENT GROUND OR BALCONY LEVEL	300
H	FROM SURFACE FACING THE TERMINAL	600
I	FACING TERMINALS	1200
J	FROM OPENING (DOOR/WINDOW) IN CAR PORT INTO DWELLING	1200
K	VERTICAL FROM A TERMINAL	1500
L	HORIZONTALLY FROM A TERMINAL	300

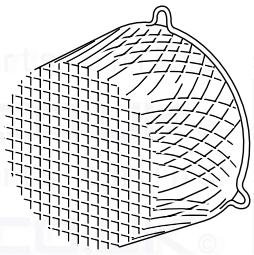

TERMINAL GUARD TYPE K3
SUPPLIED BY :
Tower Flue Components Ltd.
Morley Road
Tonbridge
Kent
TN9 1RA

Diagram 3.1

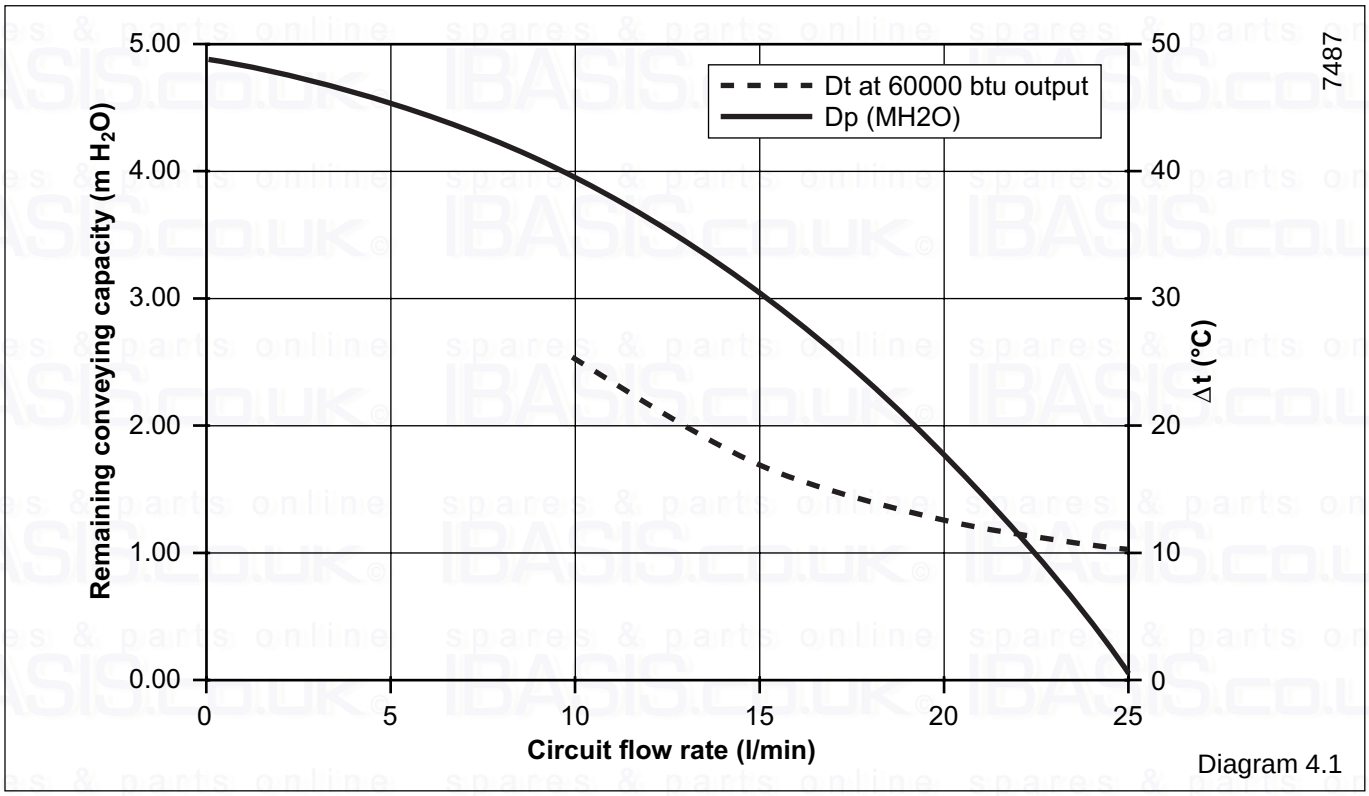

Diagram 4.1

4.1 General Notes

The boiler is intended for use in a sealed system only.

4.2 Safety Valve

The safety valve is an integral part of the boiler.

It cannot be adjusted but has a manual test device.

4.3 Pressure Gauge

A pressure gauge is incorporated into the boiler to indicate the system pressure.

The gauge has a cold fill set pointer.

4.4 Pump

The circulation pump is integral with the boiler.

The remaining circulating pressure head available from the boiler is shown in diagram 4.1.

4.5 Expansion Vessel

The boiler has an integral expansion vessel with a capacity of 6Litres, (1.32gall). If the system water content exceeds the maximum quoted in Table 1, Data, an additional vessel should be connected into the system as close as possible to the central heating return connection of the boiler, see diagram 4.2.

The pressure shall not be less than the static head at the point of connection, that is, the height of the top point of the system above the expansion vessel.

4.6 Flow Rate

If required a valve can be incorporated in the main flow or return of the system, valve “A” shown in the flow diagram 4.2. This valve must be lockable and positioned so that inadvertent closure or unauthorised interference is not possible.

4.7 Bypass

The bypass is an integral part of the boiler and cannot be adjusted.

No external system bypass is required.

4.8 Filling Sealed Systems

Provision for filling the system at a low level must be made. Three methods of filling are shown in diagram 4.3.

There must be no permanent connection to the mains water supply, even through a non-return valve.

NOTE: It is important that fittings used for connection to potable water comply with the water undertakers requirements.

4.9 Corrosion Inhibitor

If an inhibitor is to be used in the system, contact the inhibitor manufacturer so that they can recommend their most suitable product.

When fitting the boiler into an existing system, special care should be taken to drain the entire system, including radiators, then thoroughly cleaning out before fitting the boiler whether or not adding an inhibitor.

4.10 Draining

A draining tap must be provided at the lowest points of the system, which will allow the entire system to be drained. An additional draining tap MUST be fitted close to the boiler.

The flow and return isolation valves are provided with drain points for boiler heat exchanger drainage.

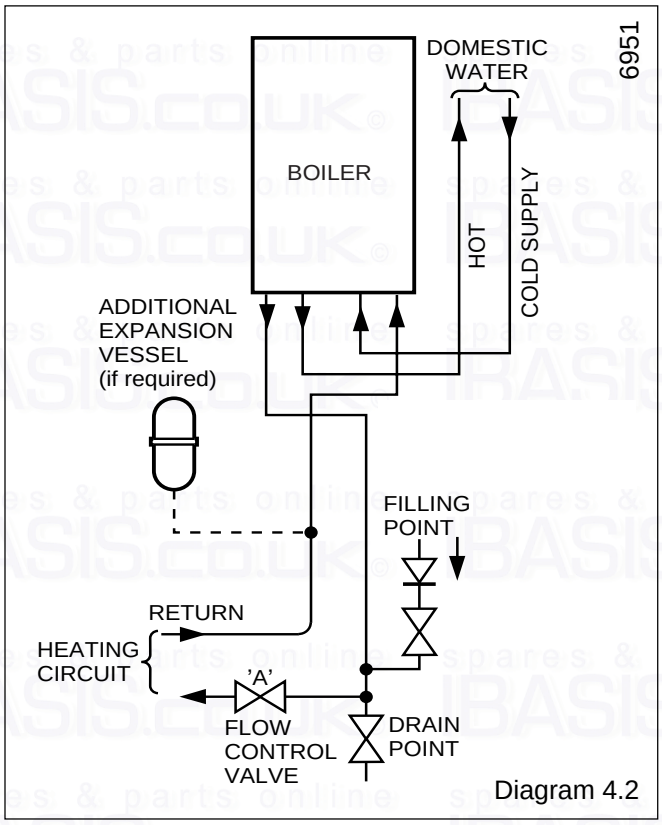

Diagram 4.2

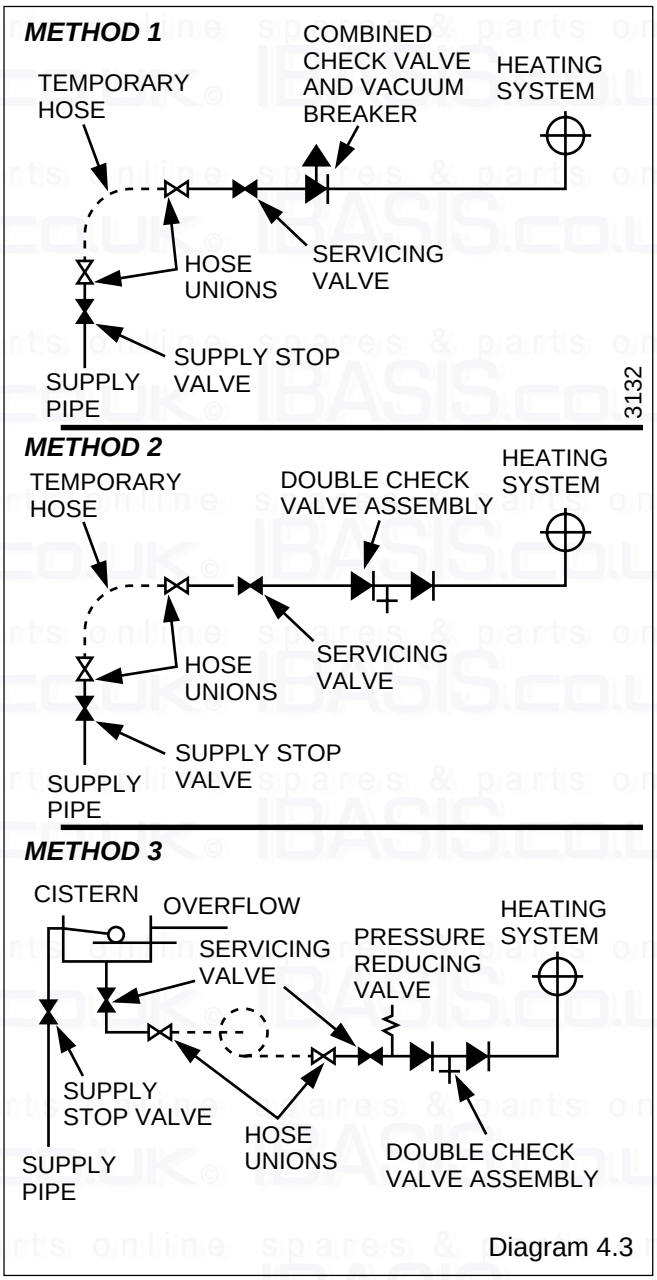

Diagram 4.3

5 Domestic Hot Water System

5.1 General

The domestic hot water service must be in accordance with the rules in force in the countries of destination.

5.2 Water Pressure

For the minimum and maximum working pressures of the domestic hot water circuit of the boiler refer to diagram 1.2.

If the cold water supply pressure exceeds the maximum, a governor must be fitted in the supply to the boiler to reduce the pressure to within the limits given.

5.3 “Hard” Water Areas

In areas where the water is “hard”, more than 200mg/litre, it is recommended that a proprietary scale reducer is fitted in the cold water supply to the boiler. Consult the local water company for additional advice.

A double check valve assembly must be fitted upstream of the scale reducer. For the relative position of the scale reducer and pressure reducing valve, if required, refer to the manufacturer’s instructions.

6 Installation Preparation and Gas / Water Connections

The installation requires the following components :-

1. Plumbing jig Carton
2. Boiler Carton
3. Flue Pack

6.1. Plumbing Jig

Remove from the carton the wall template, then follow the instructions given on the template.

Note: It is important that the wall hanging bracket and the service cock bracket are fitted to a flat and true wall area for correct alignment with the boiler. Where this cannot be achieved it is acceptable to pack out the service cock bracket to obtain the correct alignment with the wall hanging bracket.

6.2 Gas Connection

Provision is made for the gas supply to be connected from below the boiler, see diagrams 1.1 and 6.1 for position.

Refer also to “Gas Supply”, Section 1.7.

Make the gas supply connection to the gas service cock. While making the connection, do not subject the gas service cock to heat as you may damage the seals. Purge the gas supply.

6.3 Water Connections

Provision is made for the domestic cold water inlet to be connected from below or through an internal wall at the rear of the boiler, see diagram 1.1 and 6.1 for position.

Refer also to Section 5 “Domestic Hot Water System”.

Provision is made for the water connections to be connected from below or from above, passing down either side of the boiler. Take care that any pipework connected from above will clear the expansion vessel. Refer to the wall template. If connecting from above a piping kit 457160 is available and is recommended. If necessary, temporarily fit the boiler.

Flush out the domestic water and heating system before connecting the boiler.

Make the connections to the domestic hot water outlet and the heating system by means of the isolating valves, see diagram 6.1.

While making the connections. Do not subject any of the isolating valves to heat as you may damage the seals.

Make sure that the drain screw heads on the isolating valves are accessible.

6.4 Safety Valve Discharge

WARNING. It must not discharge above an entrance or window or any type of public access area.

A short discharge pipe is supplied loose with the boiler, which when fitted to the safety valve, will end below the boiler the position is next to the heating return, see diagram 6.2. (THE DISCHARGE PIPE MUST BE FITTED BEFORE THE BOILER IS MOUNTED ON THE WALL).

This must be extended, using not less than 15mm od metal pipe, to discharge, in a visible position, outside the building, facing downwards, preferably over a drain. The pipe must have a continuous fall and be routed to a position so that any discharge of water, possibly boiling, or steam cannot create any danger to persons, damage to property or external electrical components and wiring.

Note. To ease future servicing it is advisable to use a compression type fitting to extend the discharge pipe.

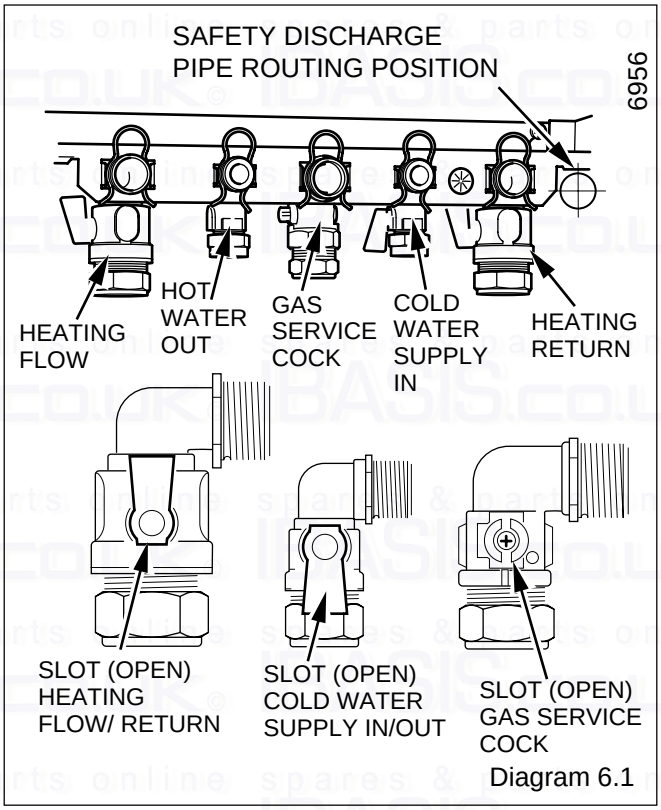

Diagram 6.1

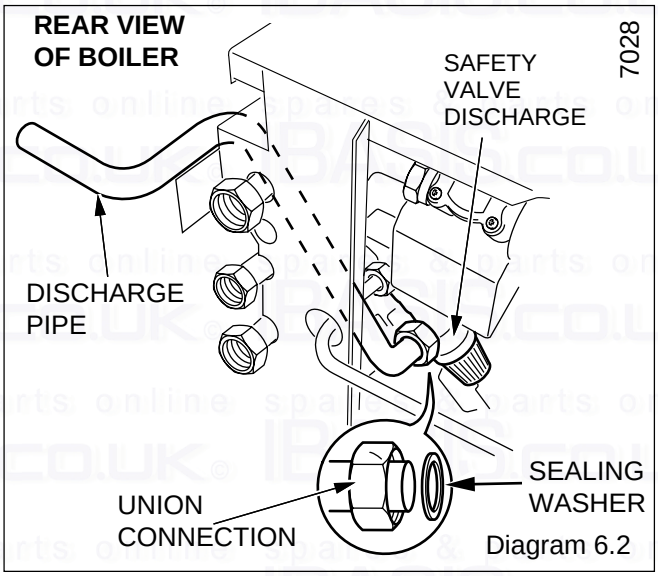

Diagram 6.2

TOP OUTLET FLUE PACK

7508

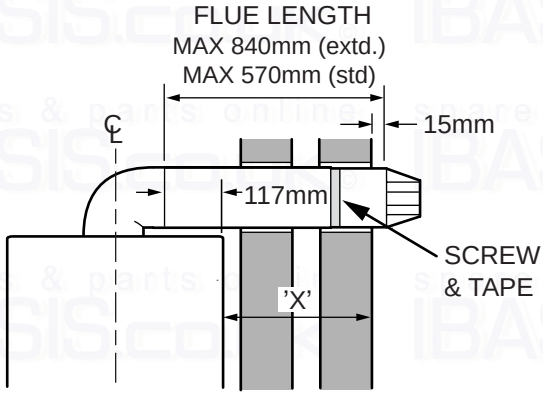

SIDE FLUE

'X' plus 132mm = FLUE LENGTH

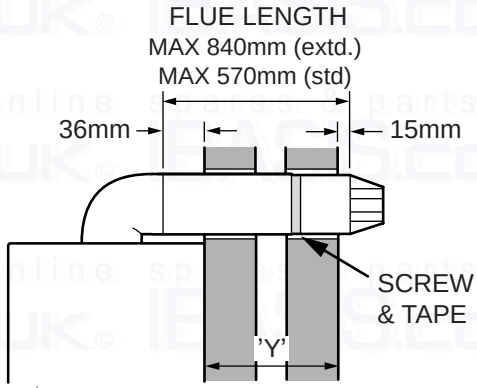

REAR FLUE

'Y' plus 50mm = FLUE LENGTH

STD./EXTD. TOP OUTLET FLUE PACK & 1 METRE EXTENSION KIT

3 x 1 metre extension kits may be joined together.

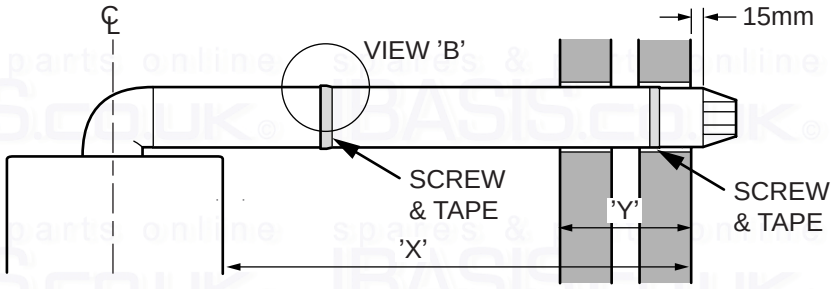

SIDE FLUE 'X' plus 132mm = FLUE LENGTH

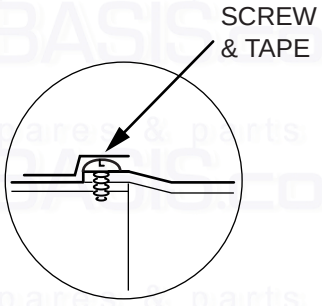

REAR FLUE 'Y' plus 50mm = FLUE LENGTH

7506

FLUE PACKS	MINIMUM WALL THICKNESS	MINIMUM FLUE LENGTH	MAXIMUM FLUE LENGTH	MAXIMUM DISTANCE FROM "Y" BOILER MOUNTING FACE TO EXTERNAL WALL FACE	MAXIMUM DISTANCE FROM "X" BOILER CASING TO EXTERNAL WALL FACE
TOP STD.					
REAR	75	126	570	519	-
SIDE	75	212	570	-	438
TOP EXTD.					
REAR	75	126	840	789	-
SIDE	75	212	840	-	708

NOTE :
IF IT IS NECESSARY TO CUT THE DUCTS TO ACHIEVE THE "FLUE LENGTH" MAKE SURE THAT THE OVERLAPS ARE AS FOLLOWS :-
THE OVERLAP FOR AIR DUCT = 25mm
THE OVERLAP FOR FLUE DUCT = 50mm

THE MAXIMUM LENGTHS CAN BE INCREASED BY AN ADDITIONAL 3 METRES WITH THE USE OF THE 1 METRE EXTENSION KITS.
NOTE :THIS APPLIES TO STANDARD KITS ONLY.

Diagram 7.1

7.1 Flue Position and Length

Determine flue application, length and terminal position before starting, refer to diagram 7.1.

Note: The Standard Top Outlet Flue Pack and the Extended Top Outlet Flue Pack contains a flue duct extension piece complete with "O" rings, this should be discarded.

If you are using a Flue Bend or a Vertical Flue Kit, please follow the instructions supplied with the kit.

To make a neat finish to the flue outlet a flue collar kit, part No. 443286, with instructions, is available, see diagram 7.2.

Note: If required an optional wall liner kit, part no. 900862, is available complete with instructions.

7.2 Flue Assembly

Extend the telescopic flue to the required length, making sure that the minimum overlap is no less than 25mm, and that the flue terminal projects 15mm minmum beyond wall face, see diagram 7.1.

Carefully drill though air duct pilot hole and secure with self tapping screw provided in fittings pack, see diagram 7.1.

Seal the joint with the tape provided.

If the flue system requires the addition of flue extension kits, drill, seal and secure them with the self tapping screw and tape provided.

7 Flue Preparation

Note: Should any one of the flue sections require cutting to obtain desired flue system length, cut at the end opposite the expanded end.

If the boiler is not to be fitted for some time cover the hole in the wall.

7.3 Internal Access Flue

If access to the outside wall is not practical, the flue system can be installed from inside. Use of the optional wall liner kit is required.

7.4 Top Outlet Rear Flue Fixing

Fit the self adhesive foam seal provided in the flue pack around the air duct at the position shown in diagram 7.1.

Make good around the flue outside after installation of the boiler.

Important: If the wall liner kit is used, the self adhesive foam seal included in the wall liner kit must be used in place of the one supplied with the flue pack, see diagram 7.3 for position of self adhesive seal.

7.5 Top Outlet Side Flue Fixing

Make good the area around the flue inside and outside after installation of the boiler.

Important: If the wall liner kit is used, the self adhesive foam seal included in the wall liner kit must be used in place of the one supplied with the flue pack, see diagram 7.3 for position of self adhesive seal.

7.6 Flue Positioning

Push the flue assembly into and through the hole such that it is within the wall, and does not stick out into the room. Do not push the flue assembly too far into the hole as it has to be pulled back into the boiler and secured.

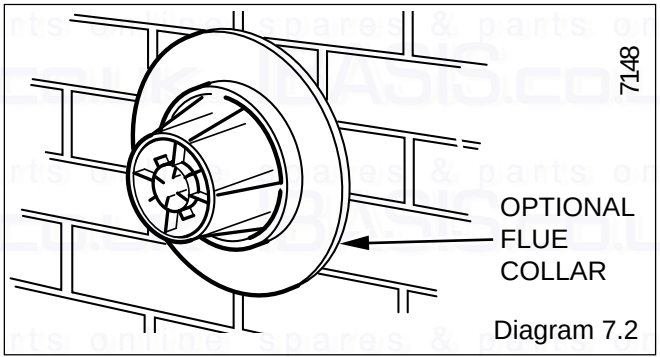

Diagram 7.2

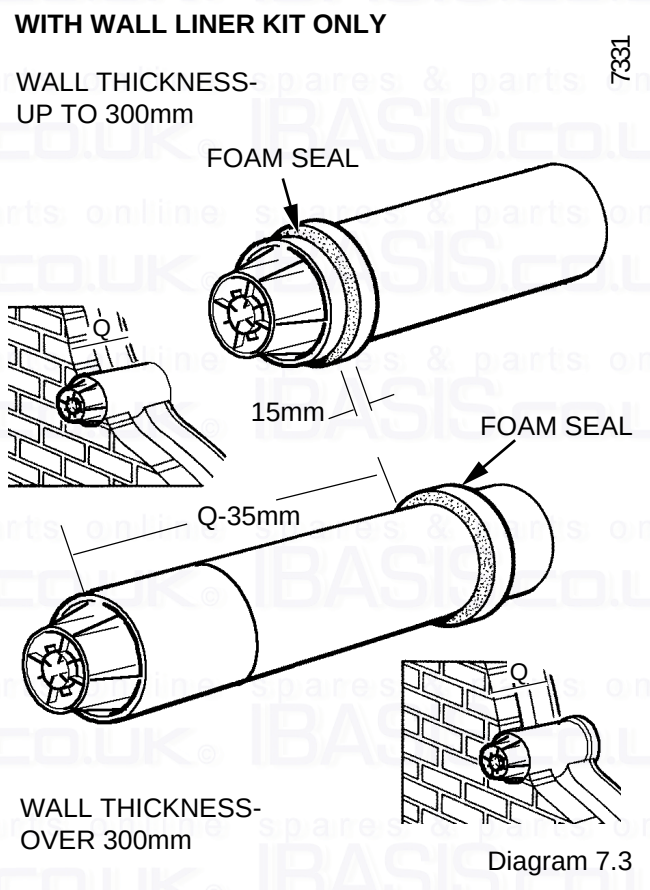

Diagram 7.3

8 Mounting the boiler and Flue Fitting

8.1 Boiler Mounting

Remove the inner case front, see diagram 8.1.

To assist with the location of the flue elbow into the fan outlet remove the fan by removing the securing screws, the electrical connections by pulling the boots not the wires and air pressure switch tubes, see diagram 8.2.

Remove the protective caps from the boiler water pipes.

Fit the sealing washers (supplied in the fittings pack) to the boiler water pipes by inserting them into the tubing nuts (the nipples on the washers will hold them in position), see diagram 8.4.

Lift the boiler into position on the top mounting brackets, see diagram 8.3.

8.2 Water and Gas Connections

Locate the boiler water pipes and gas supply pipe making sure the washers are retained in the tubing nuts onto the isolation valves, fully push the boiler back, see diagram 8.4.

Ensure the bottom boiler bracket is sitting on top of the service cock bracket, see diagram 8.3.

Fit the flow restrictor into the domestic water inlet, see diagram 8.4.

Secure all the tubing nuts finger tight, plus $^3/_4$ turn maximum.

Connect the gas pipe to the isolation valve ensuring that the sealing washer (supplied fitted) is in position.

8.3 Boiler Securing

Secure the boiler with the two boiler securing screws supplied loose, to the service cock bracket, see diagram 8.3.

An anti theft kit is available, Kit No. 457110

8.4 Flue Fixing to the Boiler

Make sure that the ductings do not slope down towards the boiler.

Important : The restrictor plate is for use with flue lengths upto 2 metres. For flues longer than 2 metres the restrictor is not required, do not fit.

Position the restrictor plate supplied in the loose items pack, between the flue elbow and boiler , (gasket facing upwards). Fit the flue elbow to the restrictor plate and top of the boiler using the four screws supplied, see diagram 8.5.

Tighten the four screws of the flue elbow evenly to ensure a good seal at the gasket.

Make the wall good internally and externally around the air duct, also making it weatherproof on the outer wall a flue collar kit is available Pt. No. 443286.

Refit fan retained by the rear bracket and two securing screws.

Refit the inner case front.

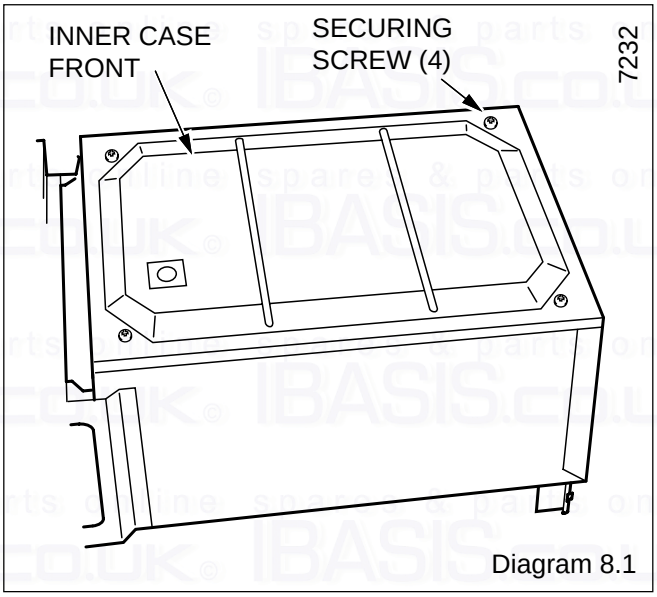

Diagram 8.1

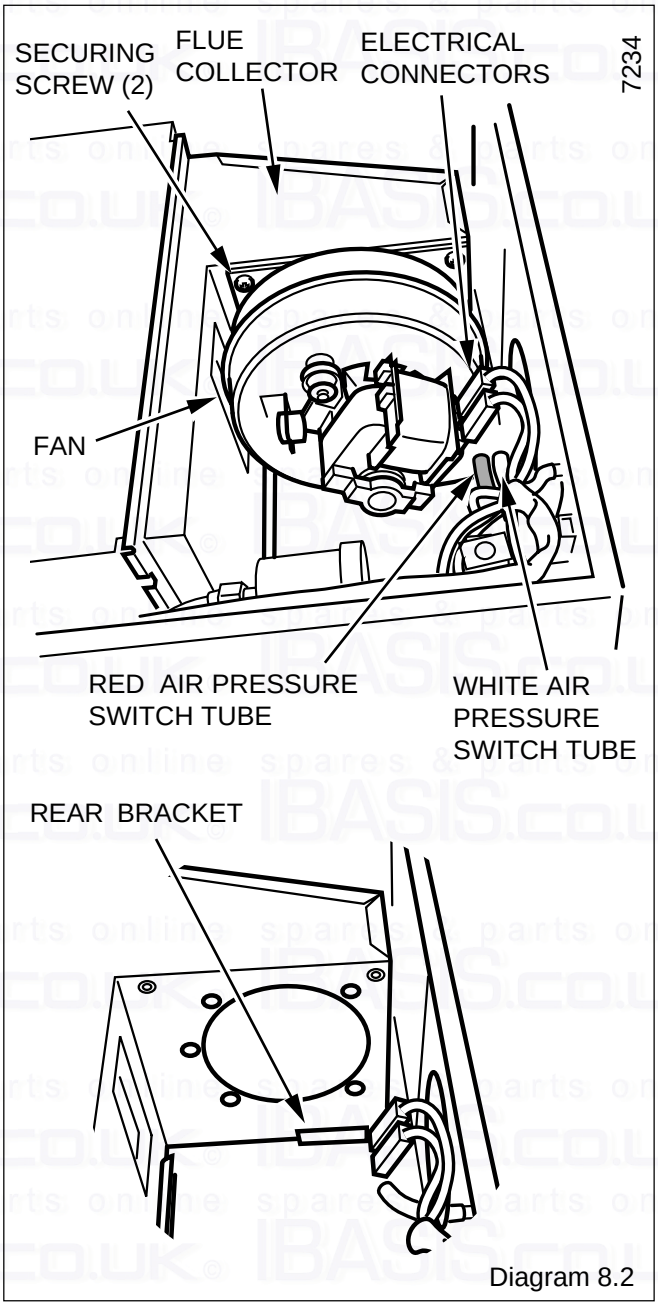

Diagram 8.2

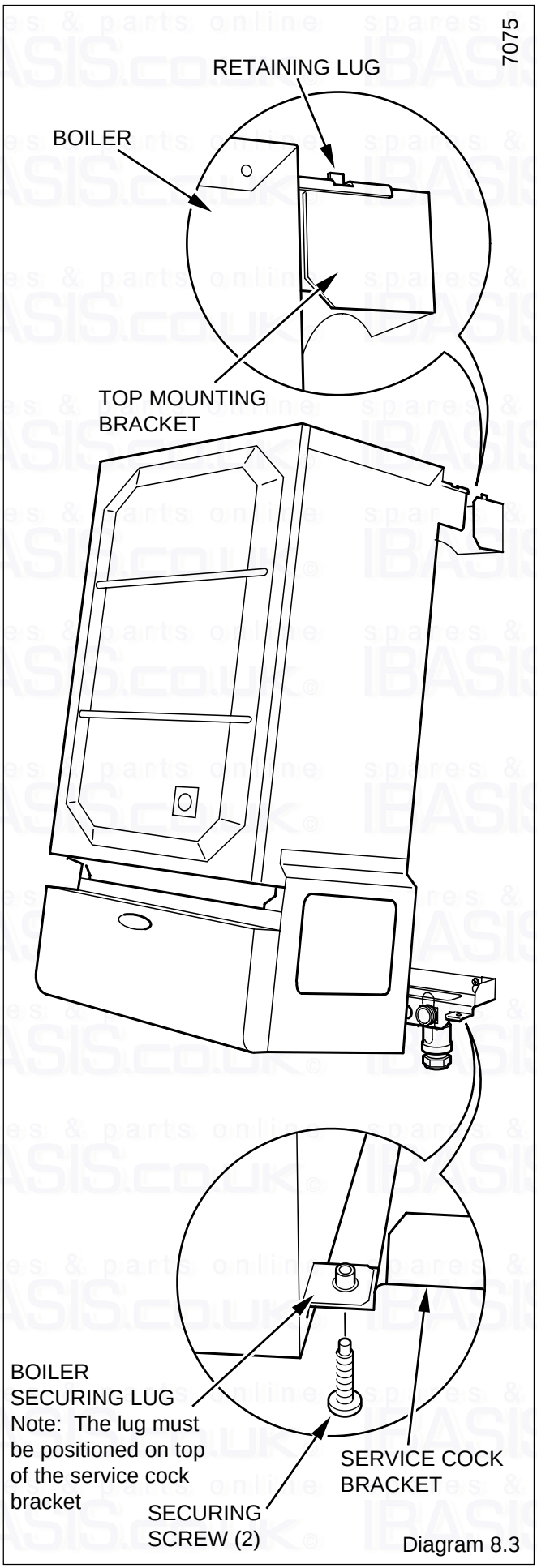

Diagram 8.3

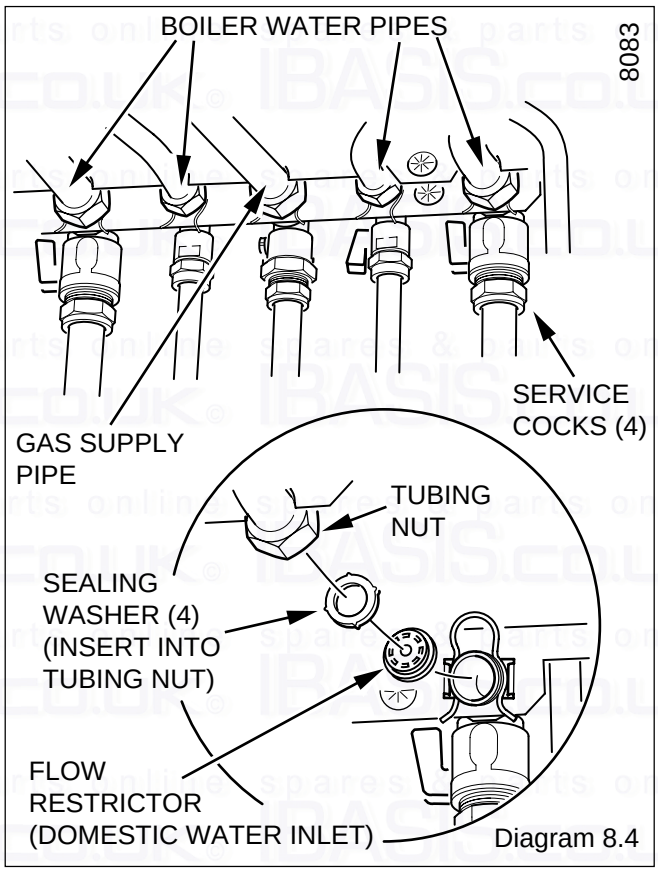

Diagram 8.4

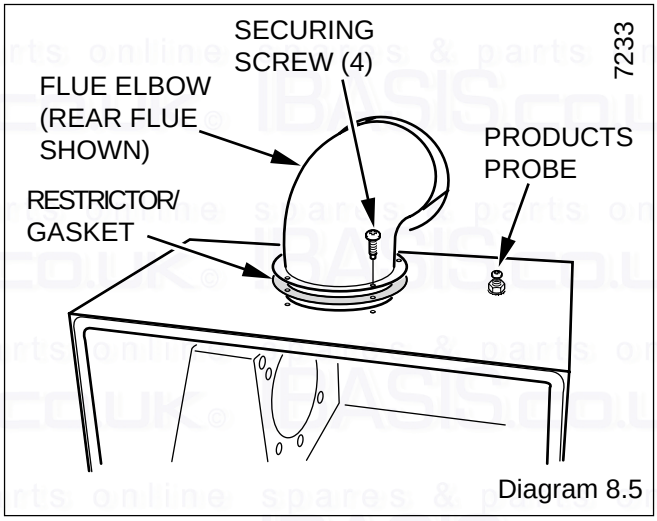

Diagram 8.5

9 Electrical Connections

9.1 Supply Cable Connection

CAUTION: To prevent an induced current from switching the central heating on, when not required, it is important that the heating system control cables are separated from the other mains supply cables.

Open the controls cover door. Remove the two screws securing the controls facia, see diagram 9.1.

Hinge the control fascia open.

The boiler requires a permanent mains supply through an external isolator which must also isolate any heating system controls, see diagram 9.2.

Any heating system controls must not interrupt the permanent mains supply to the boiler.

Using PVC cable of a suitable length and rating as stated in Section 1.8 “Electrical Supply”, route the mains supply cable and connect to the appropriate terminals of the connector block, restrain with the cable clamp supplied, see diagram 9.2.

Standard colours are, Brown - Live, Blue - Neutral, Green and Yellow - Earth.

Make the earth cable of a greater length so that if the cable is strained the earth would be the last to become disconnected.

CAUTION: It is ESSENTIAL to make sure that the polarity is correct.

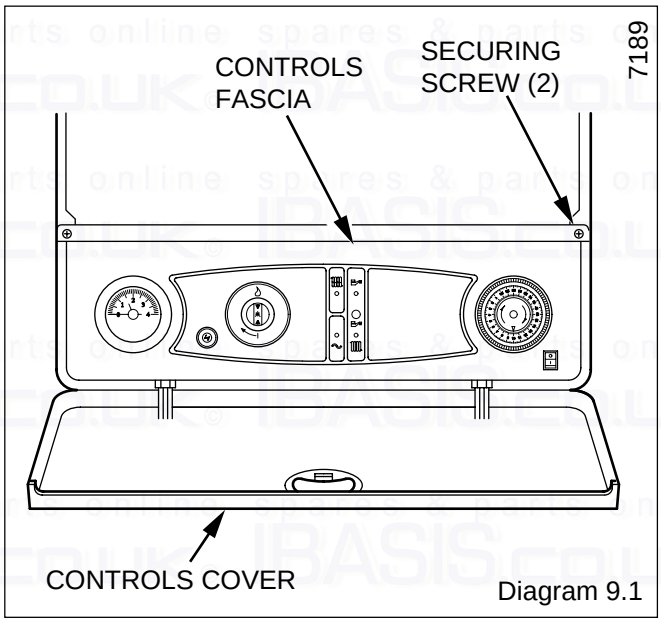

Diagram 9.1

9.2 Heating System Controls

All external controls and wiring are required to provide a minimum of reinforced insulation at 250Vrms between the parts of those devices operating at mains hazardous voltage and the user accessible parts af those devices.

The heating system should have installed: a programmer and room thermostat controlling the boiler.

Thermostatic radiator valves may be installed in addition to the room thermostat.

Note: For further information, see The Building Regulations 1991 - Conservation of fuel and power, 1995 edition - Appendix G, table 4b.

If electrical controls are not to be used to regulate the heating system, do not remove the red link cable.

When any form of electrical control is being used to regulate the heating system, remove the red link cable and connect heating system controls in series.

9.3 Clock/timer Kit (if applicable)

Fit the clock/timer kit following the appropriate sections of the instructions supplied with it..

9.4 Frost Thermostat

If the installation requires protection by a “frost thermostat”, connect a single pole type, to the appropriate terminals of the connector, see diagram 9.3.

Electrical Checks

Keep all cables away from hot surfaces.

Carry out preliminary electrical system checks as below:

1. Test insulation resistance to earth of mains cables.
2. Test earth continuity and short circuit of all cables
3. Test the polarity of the mains.

Refit the controls fascia.

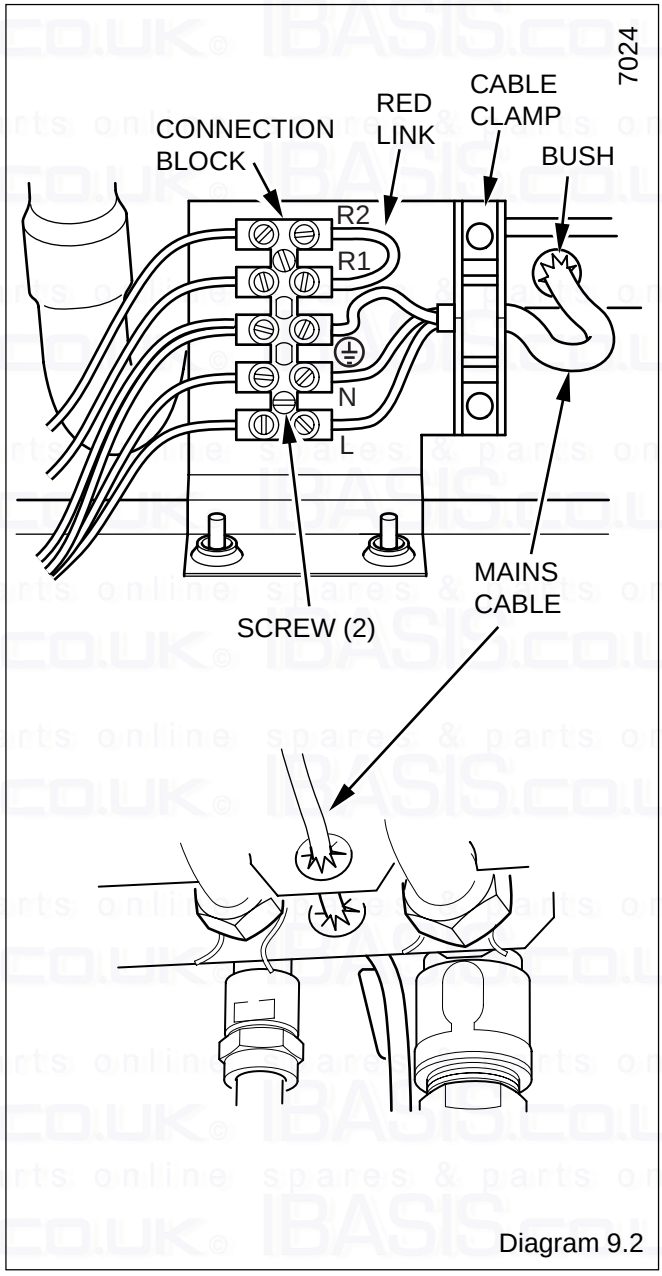

Diagram 9.2

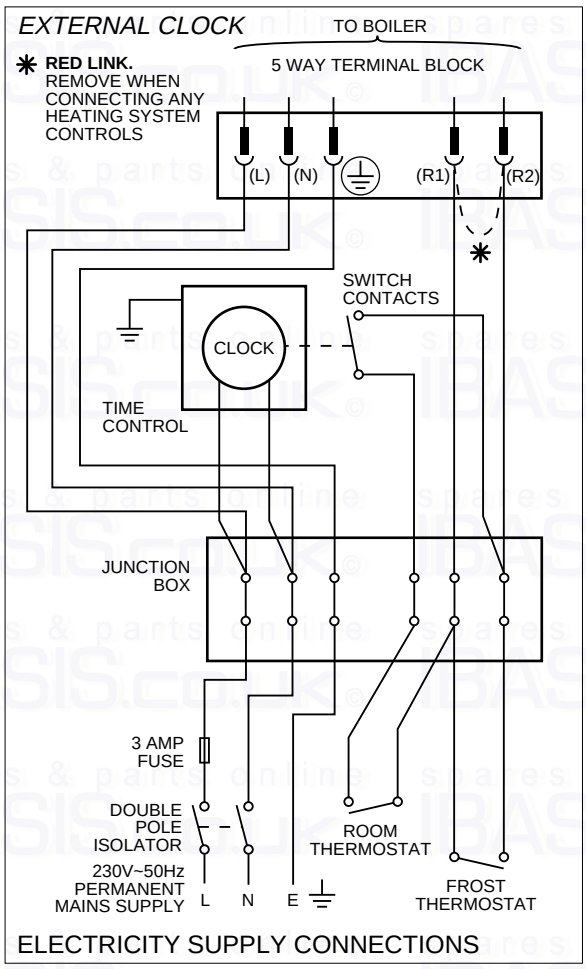

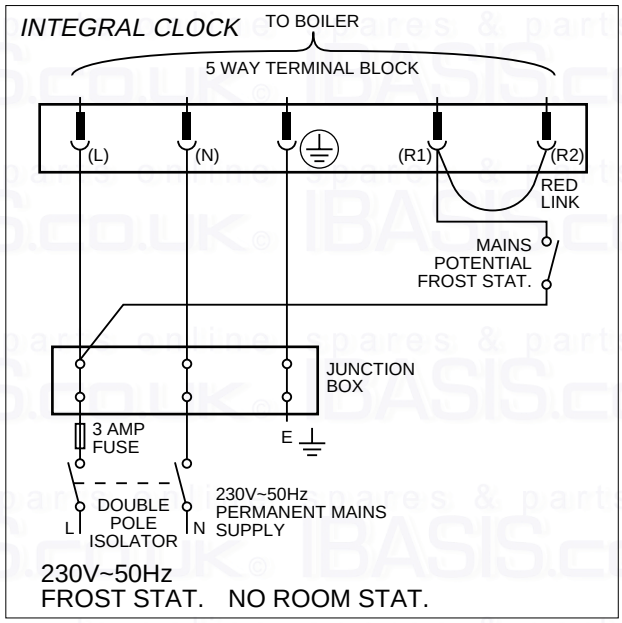

7100

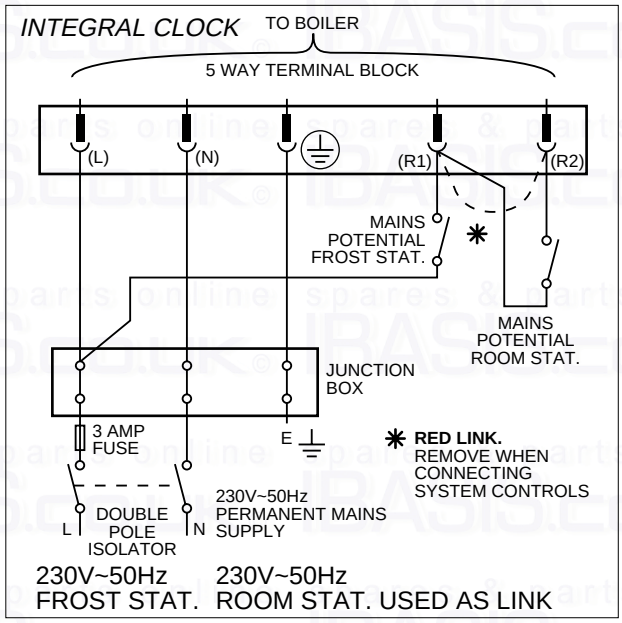

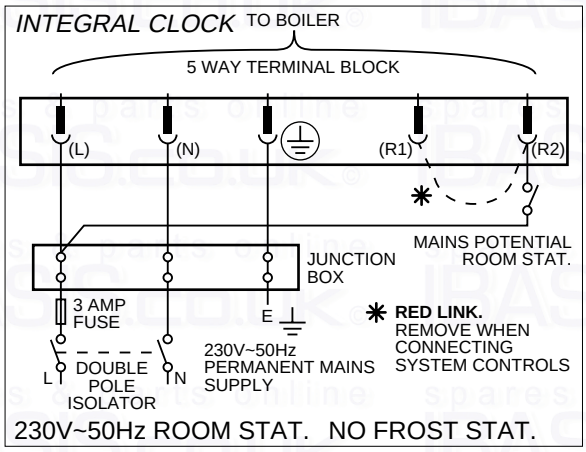

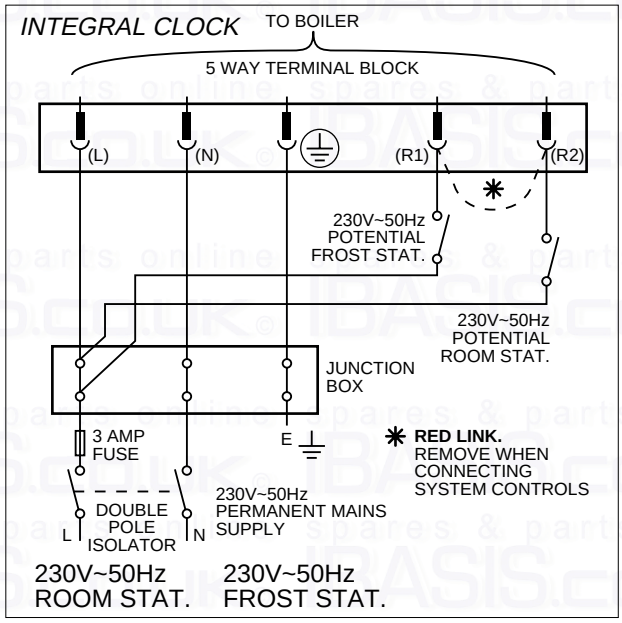

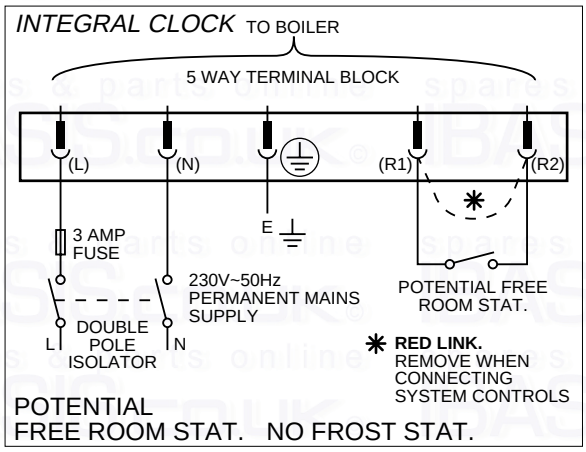

Diagram 9.3

Please ensure the “Benchmark” logbook is completed and left with the user.

10.1 Filling Domestic Water Circuit

Check that the boiler is isolated from the electrical supply, at the external isolator.

Fully open the domestic water supply stop cock or valve in the supply to the boiler.

Open the domestic water isolation valve, lever in line with the valve body, see diagram 6.1.

Open all hot water draw-off taps and close them when water flows. Check for water soundness of the whole domestic water system and boiler.

10.2 Filling the Heating System

Open the two central heating isolating valves, levers in line with the valve body, see diagram 6.1.

Flush, fill and vent the system refer to Section 4.8 “Filling Sealed Systems”.

WARNING. SEVERAL COMPONENTS OPERATE ON MAINS VOLTAGE AND WITH THE OUTER CASE REMOVED, LIVE COMPONENTS BECOME EXPOSED.

To assist in filling and venting, the pump may be operated: Connect the electrical supply, refer to diagram 4 Instructions for Use set button “J” to “winter”, “F” will illuminate, set any remote heating systems controls, time switch and/or room thermostat to call for heat.

Note. If the clock/timer kit is to be fitted, refer to the setting instructions in the Instructions for Use.

Make sure that the automatic air vent is operating correctly.

Take care not to splash any of the electrical components.

Open the controls cover.

Refer to diagram 4 Instructions for Use. Operate button “J” between “H” summer and “F” winter to ensure that water flows through all parts of the boiler and air is not trapped in the boiler internal bypass.

Pressurise the system until the pressure is 1.5bar (21.5lbf/in2). Check the heating system and boiler for water soundness.

Check the operation of the safety valve by turning the safety valve knob in the direction of the arrow.

Lower the pressure to the initial cold fill design pressure, refer to Table 1. Position the set pointer on the boiler pressure gauge at this pressure also.

Refit inner case front.

10.3 Preparation for Lighting

Turn on the gas service cock, slot in line with the length of the cock.

Test for soundness and purge air from the gas supply.

Switch power 'ON' at the mains electrical supply at the external isolator and switch at the boiler.

Light the pilot refer to relevant parts of "Light the boiler" (Instructions for Use).

Loosen the burner pressure test point screw and connect a suitable pressure gauge, see diagram 10.1.

10.4 Burner Pressure - Hot Water

Connect the electrical supply it will default to winter, select summer, the pump will operate for about 30 seconds then the pump will stop.

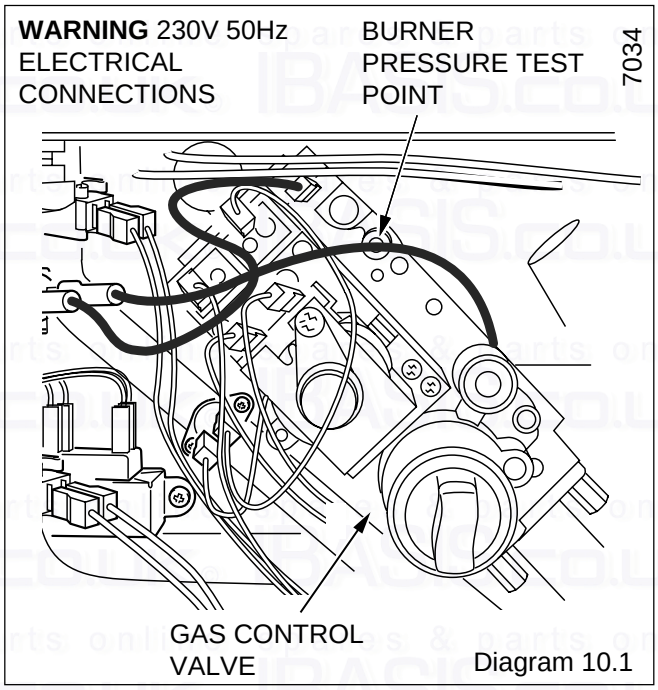

Diagram 10.1

Fully open the largest hot water draw off tap whereby the main burner will light, the flames gradually increasing to the maximum.

Check the soundness of the boiler gas joints, with the main burner on, using a leak detection fluid. Take care not to splash any of the electrical components.

To achieve this flow rate a water pressure of at least 0.8bar is required during commissioning, although subsequently the appliance will work at a minimum pressure of 0.5bar.

This flow rate should prevent any modulation of the gas pressure.

The burner pressure is factory preset and no adjustment should be required.

Close the hot water draw off.

If the maximum pressure cannot be obtained, check that the gas supply is of adequate size, refer to Section 1.7.

10.5 D.H.W. Gas Rate Modulation

Ensure that the D.H.W. potentiometer is set to max. (fully clockwise).

The minimum gas rate is factory preset and no adjustment should be required.

ALWAYS CHECK HOT WATER BURNER PRESSURE FIRST - REFER TO SECTION 10.4.

To check the minimum gas rate, first make sure that the boiler is isolated from the electrical supply at the external isolator Remove grey wire from the modureg coil (insulate from sheet metal).

Switch on the electrical supply it will default to winter, select summer.

Fully open a hot water draw off tap and the main burner will light at the minimum gas rate.

Check that the burner pressure is 0.6mbar +/-0.2mbar, (0.25in wg +/-0.1in wg). If this is incorrect, it may be adjusted by removing the cap and turning the larger adjusting nut of the modulator (anticlockwise to decrease the pressure), see diagram 10.6.

If the above adjustment was necessary, it will be essential to check that the maximum pressure can still be obtained. Push the spindle gently in to the stop and hold it in. The maximum pressure should be 13.6mbar. If this pressure cannot be

achieved, obtain it by turning the small adjusting nut, (clockwise to increase the pressure). Always adjust the minimum pressure first.

Reconnect the grey wire and adjust pressures on potentiometers.

If the maximum pressure is unattainable, check that the gas supply is of adequate size, refer to Section 1.7 “Gas Supply”. Put right as necessary.

Isolate the boiler from the electrical supply then reconnect the modulator cable and refit the cap.

10.6 Domestic Water Flow Rate

This is factory preset and can not be adjusted.

10.7 Burner Pressure - Heating

The burner pressure is factory preset and no adjustment should be required.

Check that all remote heating system controls, room thermostats, integral clock and the like are switched on/programmed and calling for heat.

Set button “J” to “winter” “F”.

The pump will circulate water through the boiler and the main burner will light.

Check that the burner pressure, with the heating system cold to prevent any modulation of the gas pressure, is within +/-0.2mbar (+/-0.08in wg) of 4.5mbar (1.8in wg), the central heating pressure.

If the burner pressure is incorrect, it may be adjusted to the correct setting by turning the central heating gas pressure adjuster (potentiometer), located on the control board to gain access remove the two screws securing the controls facia.

Hinge the control facia open.

Remove the plastic plugs. Using the burner adjusting tool supplied (clockwise to increase), see diagram 10.2. Turn the adjuster slowly, always making adjustment by reducing below the required pressure then increasing up to the required setting.

Isolate the boiler from the electrical supply.

Remove the pressure gauge and tighten the test point screw.

Test for gas soundness around the burner pressure test point with the main burner alight, using leak detection fluid. Take care not to splash any of electrical components.

Replace plastic plugs and refit the control fascia.

10.8 Temperature Settings

The domestic hot water outlet and central heating flow temperatures are factory preset and sealed, therefore cannot be adjusted.

The nominal temperature setting for the domestic hot water outlet is 65°C (149°F) at a flow rate of 3.6Litre/min (0.8gall/min).

The nominal maximum flow temperature setting for central heating is 82°C (180°F).

10.9 Heating System - Commissioning

Check that all remote controls and integral clock are calling for heat.

Fully open all radiator valves.

Set the heating system in operation and balance the radiators.

Refer to Section 4.6 and diagram 4.1.

Allow the system to reach maximum temperature then switch off, isolate the boiler from the electrical supply and drain the system rapidly whilst still hot.

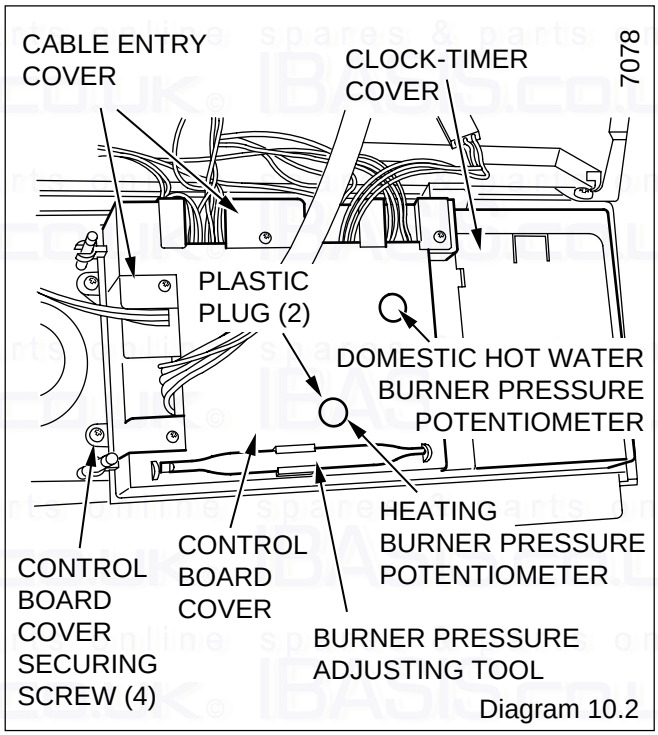

Diagram 10.2

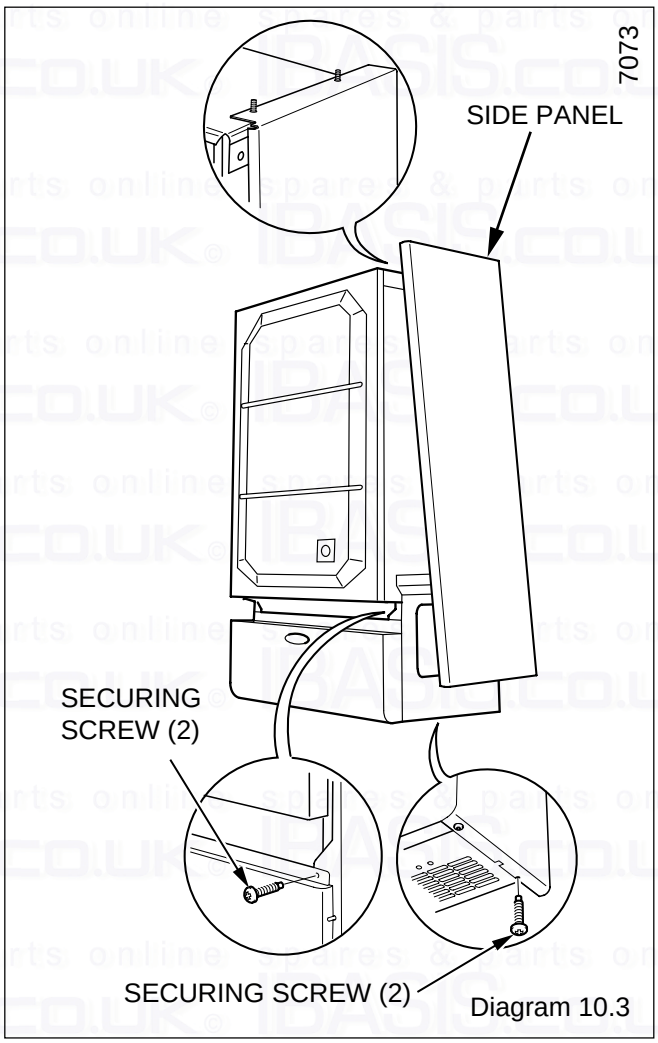

Diagram 10.3

Remove the inner case front.

Fill and vent the system as described in Section 10.2 “Filling the Central Heating Circuit”. Add inhibitor, if applicable, refer to Section 4.9 “Corrosion Inhibitor”.

Lower the pressure to the initial cold fill design pressure, using the external draining tap, close to the boiler, refer to Table 1 and Section 4.10.

10.10 Completion

Refit the inner case front.

Fit the side panels, hook into the threaded lugs at the top, see diagram 10.3.

Fit the case base, slide back engage the rear lugs, secure with two screws supplied, see diagram 10.4.

Secure the side panels at the bottom with the four screws, see diagram 10.3.

Fit the outer case front by locating it on one side then wrap it around locating it on the opposite side, slide down locating on to the threaded lugs at the top and behind the controls cover at the bottom, secure with nuts ,see diagram 10.5.

Set the boiler and any remote heating control to the desired settings, then close the control cover door.

10.11 Instruct the User

Instruct and demonstrate the lighting procedure, then advise the user of the efficient and safe operation of the boiler.

Instruct and demonstrate the operation of any heating system controls.

Advise the user that to ensure the continued efficient and safe operation of the appliance it is recommended that it is checked and serviced at regular intervals. The frequency of servicing will depend upon the particular installation and usage, but in general once a year should be enough.

Draw attention, if applicable, to the current issue of the Gas Safety (Installation and Use) Regulations, Section 35, which imposes a duty of care on all persons who let out any property containing a gas appliance.

It is the Law that any servicing is carried out by a competent person.

Advise the user of the precautions necessary to prevent damage to the system and building in the event of the heating system being out of use during frost and freezing conditions.

Reminder - Leave these instructions and the “Benchmark” logbook with the user.

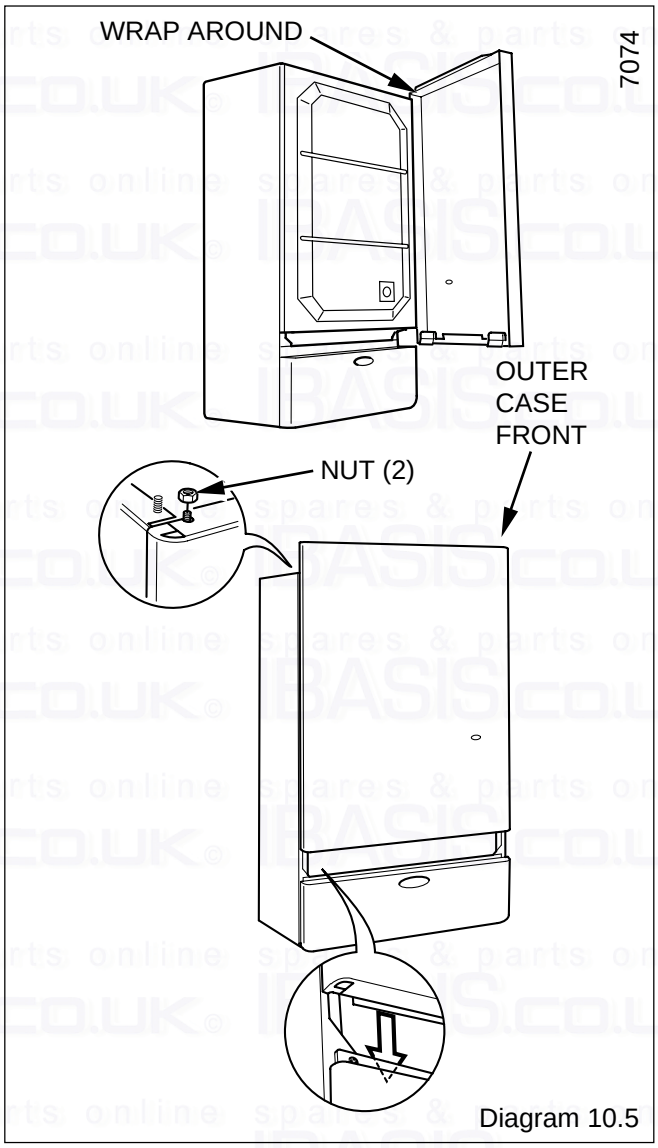

Diagram 10.5

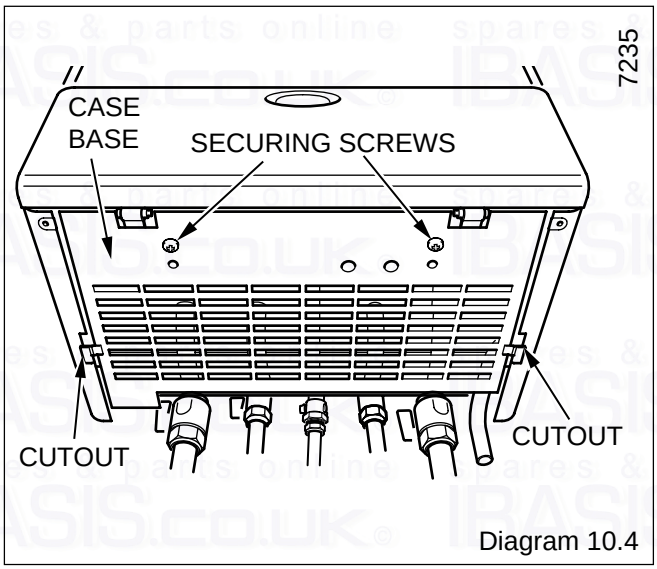

Diagram 10.4

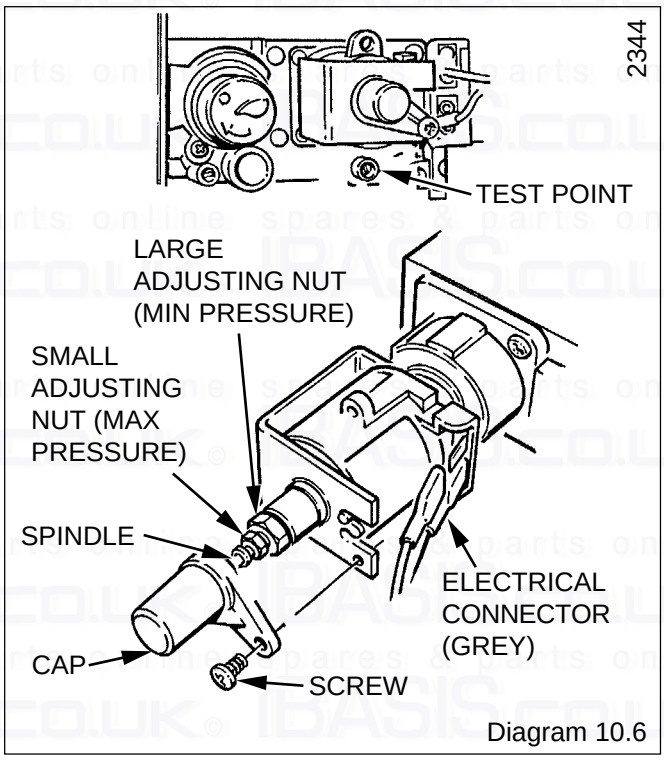

Diagram 10.6

11 General Data

11.1 Servicing or Replacing Parts

To ensure the continued efficient and safe operation of the boiler it is recommended that it is checked and serviced as necessary at regular intervals.

The frequency of servicing will depend upon the particular installation conditions and usage, but in general once a year should be enough.

The servicing of this boiler must be carried out by a competent person in accordance with the rules in force in the countries of destination.

NOTE: To obtain a products of combustion reading, remove the screw from the analyser probe positioned on the top of the boiler next to the flue elbow, see diagram 8.5. After use replace the screw.

Typical values for this boiler at maximum domestic hot water demand is:- CO_2 7.5% to 8.0% and CO 0.005% to 0.015%. These are based on a 300mm length rear flue.

Make sure the appliance does not modulate whilst checking combustion and allow the appliance to warm up for five minutes before taking a reading.

Unless stated otherwise, parts removed or renewed during servicing should be fitted in the reverse order to removal.

After completing any servicing, or renewing of gas carrying components, ALWAYS test for gas soundness and carry out functional checks of controls.

Dispose of all used sealing washers, gaskets and “O” rings when renewing components.

Use the new ones supplied with the replacement.

11.2 Data Label

The data label is positioned on the front of the inner case cover.

11.3 Isolation of Boiler

Before starting any servicing or the replacement of parts, isolate the boiler from the electrical supply at the external isolator.

When servicing or replacing any cold/hot water or heating system components close all water cocks and drain appliance.

Close the gas service cock, see diagram 6.1.

BEFORE DRAINING THE BOILER, REFER TO SECTION 11.6.

11.4 Outer Case Front Removal

Remove the two nuts securing the outer case front then lift up unhook the case at the top from the threaded lugs, pull it off on one side to release then remove, see diagram 10.5.

11.5 Inner Case Front

Remove the inner case, secured by four screws, see diagram 8.1.

11.6 System Pressures and Draining

All parts containing water of the central heating circuit within the boiler, are under the system pressure. Before any parts of this circuit are disconnected, reduce the system pressure at the external draining tap, turn the central heating isolating valves off, and drain at the drain points on the appropriate valves, see diagram 6.1.

All water containing parts of the domestic hot water circuit of the boiler will be under the supply water pressure. Before any parts of this circuit are disconnected, turn the domestic cold water isolating valve off, open the hot water taps to reduce the water pressure in the boiler and drain the boiler at the valves, see diagram 6.1.

After replacing any water containing part of the central heating circuit, make up the water loss, vent all air and pressurise the system. Refer to “Commissioning” in the Installation Instructions.

Check for water soundness and that the safety valve seats without leaking.

12 Servicing

12.1 Pilot Check

Check if the pilot flame is burning correctly and of the correct size, see diagram 14.4. If the pilot flame is not correct, the pilot injector will require removing when accessible.

12.2 Isolation and Access

Before starting, refer to Section 11.

Remove the fan from the flue collector, refer to Section 14.1

Remove the flue collector, secured with two screws.

Remove the main burner, refer to Section 14.2.

12.3 Cleaning the Heat Exchanger

Place a sheet of paper in the combustion chamber to cover the injector and pilot assembly, to collect any debris.

Brush the heat exchanger.

Remove the paper together with any debris.

Do not use a brush with metal bristles.

12.4 Cleaning the Main Burner

Use a vacuum cleaner or suitable brush to clean the burner thoroughly, making sure that all the burner ports are not obstructed.

Do not use a brush with metal bristles.

12.5 Cleaning the Pilot Injector

If the pilot flame was not burning correctly, it is necessary to remove the pilot injector, refer to Section 14.6.

Inspect the injector and clean if necessary, by blowing clear only.

Do not use a wire or sharp instrument.

12.6 Service Checks

Inspect the pilot burner, spark electrode, adapter olive on the pilot tube and thermocouple. Clean if necessary or renew, refer to Section 14.4, 14.5 and 14.6.

Check the main injector, cleaning or renewing as necessary, refer to Section 14.3.

Before replacing any parts removed during servicing, inspect the condition of all seals and joints, renewing as necessary.

Check the condition of the combustion chamber insulation. If renewing, refer to Section 14.20.

Check the spark gap, upon assembly, see diagram 14.4.

12 Servicing

12.7 Operational Checks

Check the safety valve manually by turning the knob in the direction of the arrow.

Light the boiler, carry out operational checks and any necessary adjustments as described in Commissioning in the Installation Instructions.

12.8 Completion

Hook the outer case front on the top and secure with the nuts previously removed, see diagram 10.5.

13 Fault Finding

13.1 Initial Checks

If the boiler fails to operate, first check the following:-

1) That the electrical supply is available at the boiler and the fuses are in order. The mains light should be ON. If not isolate the boiler from the electrical supply.

Test for continuity, at mains.

NOTE: THE BOILER CONTROL BOARDS CAN BE DAMAGED BY INCORRECT TESTING OF COMPONENTS AND WIRING WITH THE POWER ON.

2) Make sure that the system pressure gauge registers 0.7bar, minimum, and that the automatic air vent works. Refer to Installation Instructions, Section 10.2.

3) That the gas supply is available at the boiler and purged of air.

4) That the boiler is set for the required service.

5) With the boiler Summer/Winter Button “J” set to summer “H”, see diagram 4 User Instructions, check that the domestic water supply is available and water flows freely from the hot taps. Close the taps.

6) With the boiler Summer/Winter Button “J” set to Winter “F”, see diagram 4 User Instructions, check that all heating system controls, if fitted, are working correctly and calling for heat.

7) Check Summer/Winter Button “J” is set to Winter “F”, see diagram 4 User Instructions. Turn on a domestic hot water draw off tap to create a demand.

Allow the boiler and system to cool down waiting at least a minimum of four minutes before pressing Summer/Winter Button “J” to set to Winter “F”.

If this is satisfactory proceed with the detailed fault finding as Section 13.3.

13.2 Clock/Timer

If the clock has failed it can be bypassed by disconnecting the plug and reconnecting the link, see diagram 13.1.

Gain access by removing the two screws securing the controls facia, see diagram 10.1.

Hinge the control facia forward.

Remove the clock timer cover, see diagram 9.1.

Disconnect the clock wiring harness plug and connect the link.

This is a temporary measure and the clock should be repaired or replaced as soon as possible.

13.3 Electrical

Preliminary electrical system checks, as outlined in a Multimeter Instruction book, are the first checks to be carried out during a fault finding procedure.

Isolate the boiler from the electrical supply, refer to Section 11.3.

Gain access to the boiler controls by removing the outer case front, refer to diagram 10.5.

Remove the two screws securing the controls facia, see diagram 9.1.

Hinge the control facia forward.

Remove the cable entry cover, see diagram 10.2.

Remove the controls cover

Check that all cables and connectors are secure.

Check all cables at the multipin connectors on the board.

Test the fuse on the main control board and renew as necessary. Fuse F1 type (T2A and F2 T315mA). If a fuse fails repeatedly or the initial fault-finding checks described in Section 13.1 indicate a boiler fault, check the boiler electrical circuits and follow the fault finding procedures, see diagram 13.2 mains functional flow, 13.3 pilot fault finding, 13.4 boiler fault finding 13.5 thermocouple fault finding and for clock/timer fault finding, diagrams 13.6 and 13.7.

On completion of a fault finding task that has required the disconnection and making of electrical connections then checks, for earth continuity, polarity and resistance to earth must be carried out.

Before replacing any part please read points below:-

Replacement of parts must only be carried out by a competent person.

1. Refer to Section 11.1.

2. Always isolate the boiler from the electrical and as required, the gas supply, as Section 11.3.

3. On completion, make good any water loss and pressurise the system to initial design pressure, refer to “Commissioning” in the Installation Instructions.

Before starting refer to Section 11.1

Isolate the boiler from the electrical supply, refer to Section 11.3.

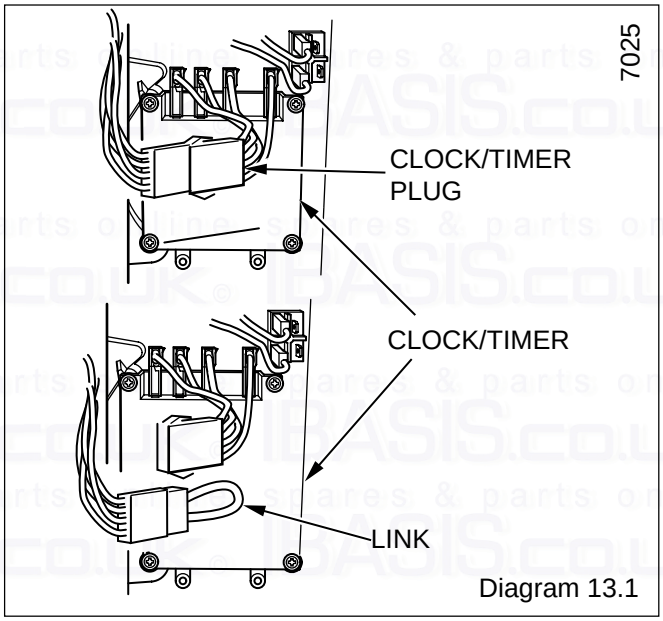

Diagram 13.1

13 Fault Finding

TO TEST FOR COMPONENT OPERATION / FAILURE

Power to the appliance :- Test for 230V~ across live (brown) and earth (yellow and green), 230V~ across live and neutral (blue), and zero potential across neutral and earth.

Thermistors :- With the power off unplug the connector and test resistance is 10kΩ at 25°C.

Domestic Hot Water demand sensor :- With a tap open the supply to the sensor measure between the red and black cables on X5a should be 12Vdc. The signal from the sensor measured between the white and black cables X5a should be between 1Vdc and 11Vdc dependent of the flow rate.

Overheat thermostat :- With the power off unplug the connectors and test for continuity (zero resistance).

Power to the gas control valve :- With a demand on test for voltages of 230Vac ~ across the red and purple cable connectors and 24Vdc~ across the grey and grey cable connectors. When burner pressure at maximum.

Power to the fan :- With a demand on and the front cover removed test for 230V~ at the fan connectors at high speed and 108V at low speed

Fan failure :- with the power off and the supply leads to the fan disconnected (pull the boots only) the resistance across the fan coil should be 45Ω to 50Ω.

Pump :- With the power off unplug the connector from the pump. Restore the power and check that there is 230V~ between live (brown) and neutral (blue) or live and the appliance earth.

Air pressure switch :- This is a change over device. With the fan at pilot only there should be 230Vac at the C and NC (No air state terminals. With the appliance running and the fan at full speed there should be 230Vac at C, Nc and No (Air State).

Water pressure switch :- With no water pressure and Power On, check there is 230V~ on the black and grey cables and 0V on the grey cable X5b. With water applied to the system and power on, check there is 230V~ on the black and grey cables and on the white cable X5b. This will prove operation of the water pressure switch.

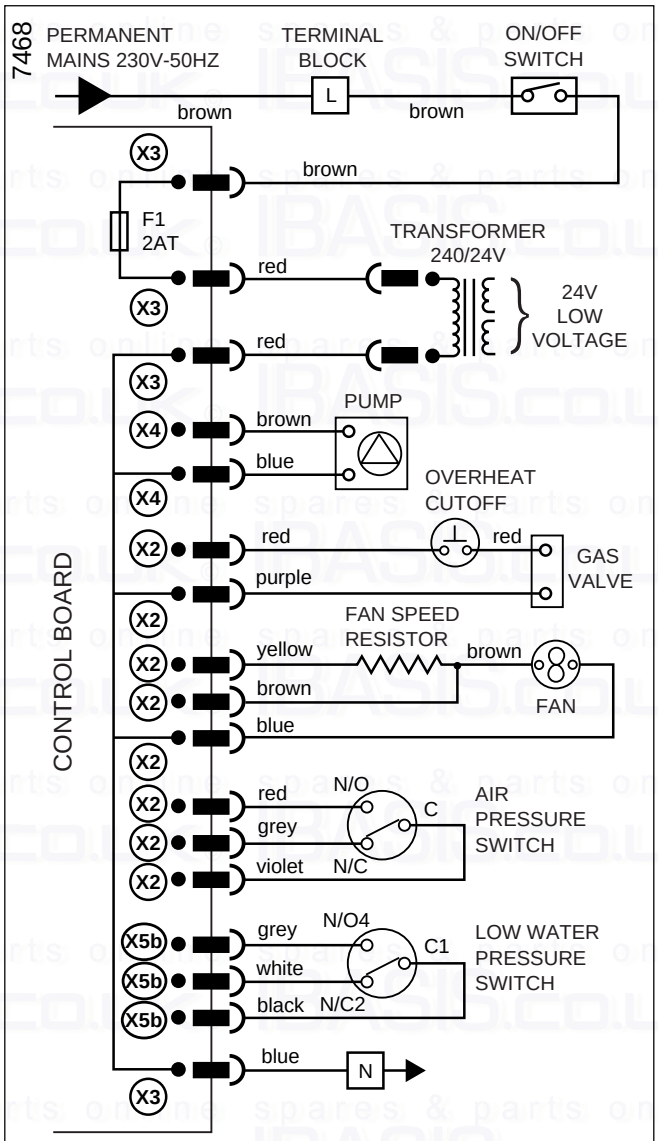

MAINS FUNCTIONAL FLOW

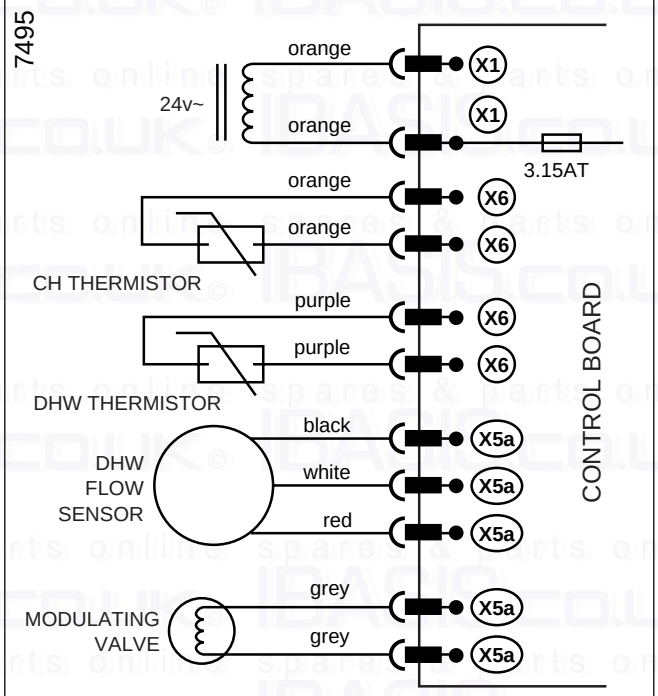

LOW VOLTAGE FUNCTIONAL FLOW

Diagram 13.2

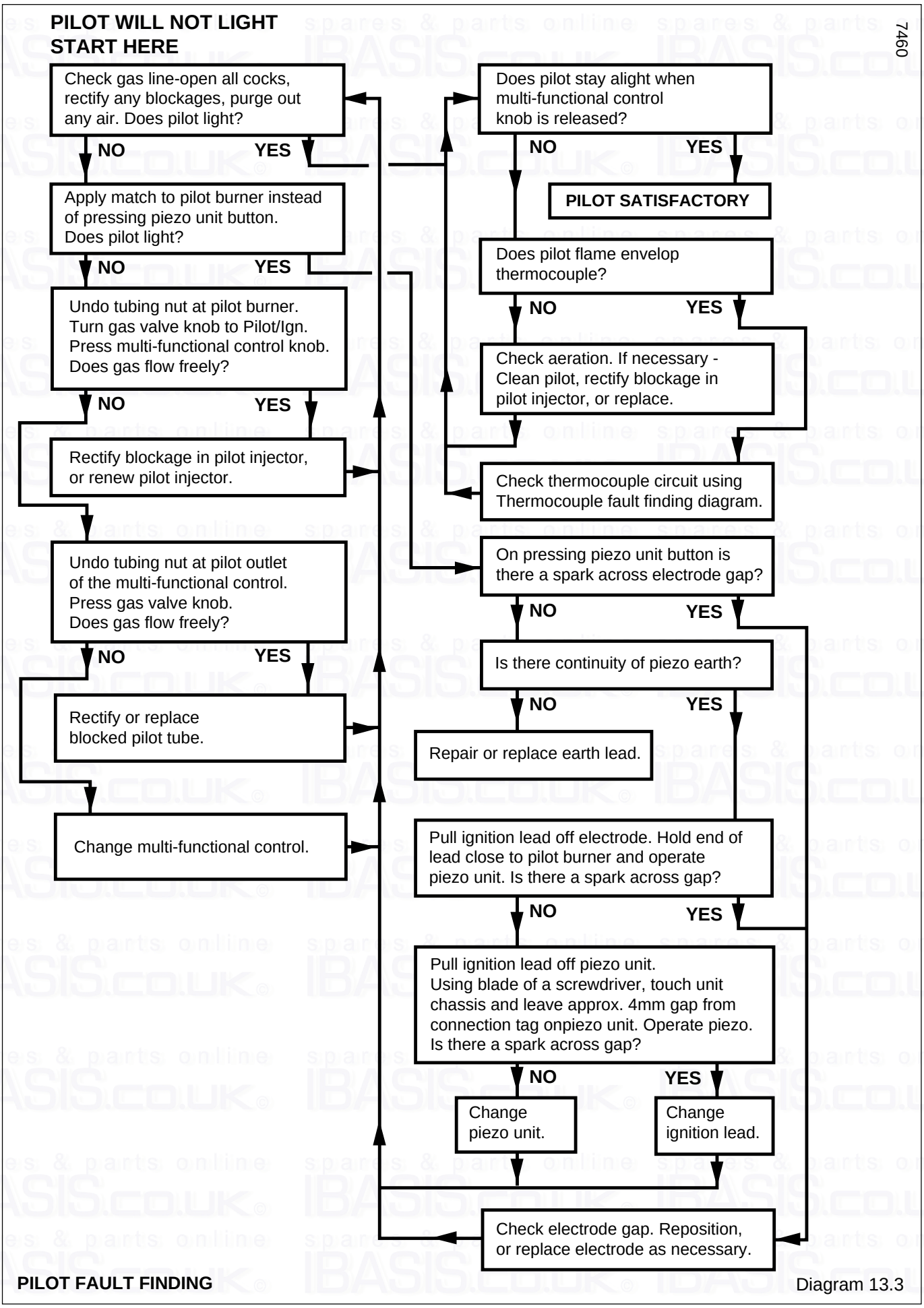

PILOT FAULT FINDING Diagram 13.3

7491

Check that gas,water and electricity are available at the boiler. There must be no external voltage applied to the control board via the central heating controls to the P.C.B.
Before commencment of test, isolate the boiler electricity supply,
ensure that the remote controls are not calling for duty (no red link in terminal block)
Refer to functional flow diagrams in conjuction with the following fault finding.

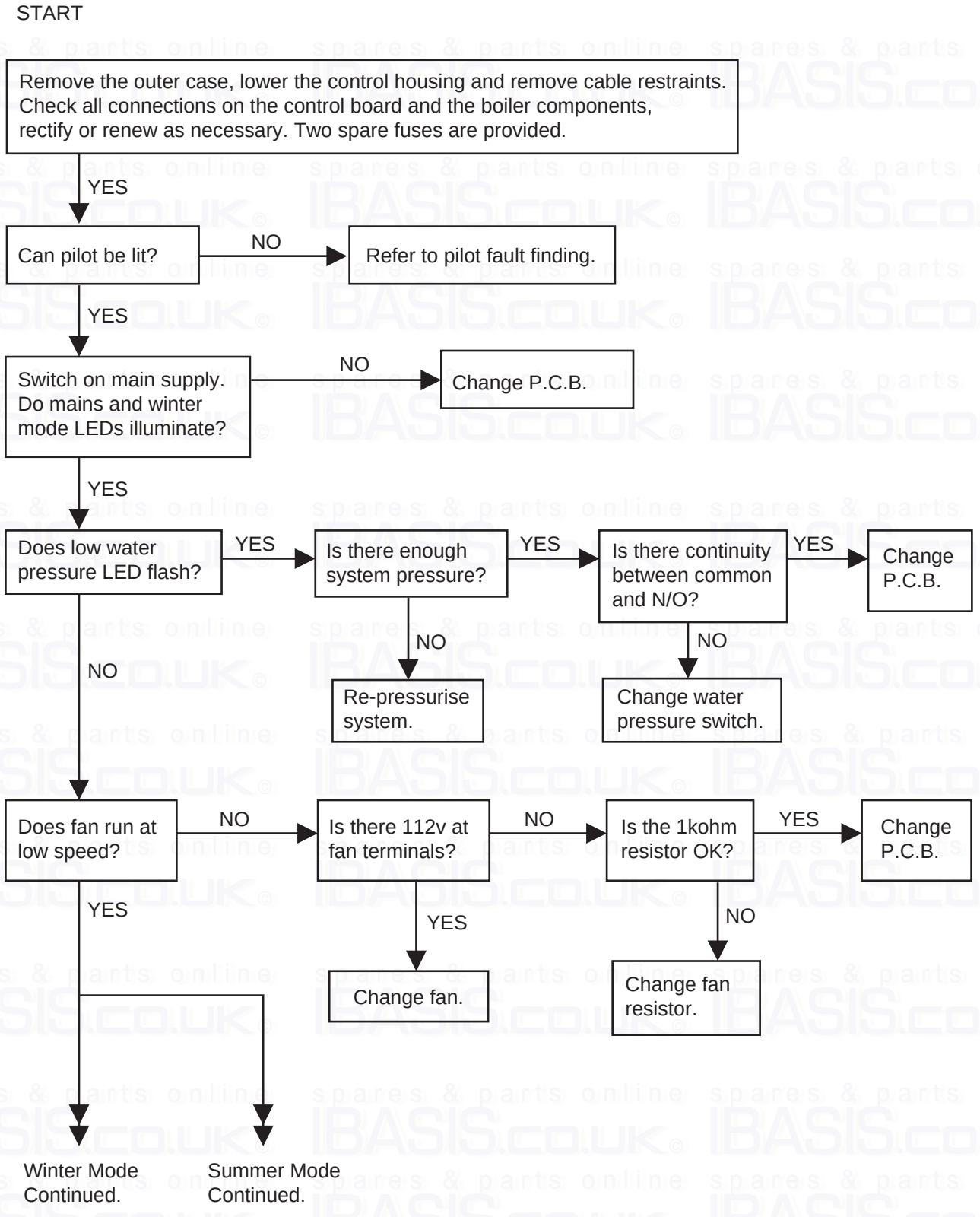

BOILER FAULT FINDING

Diagram 13.4

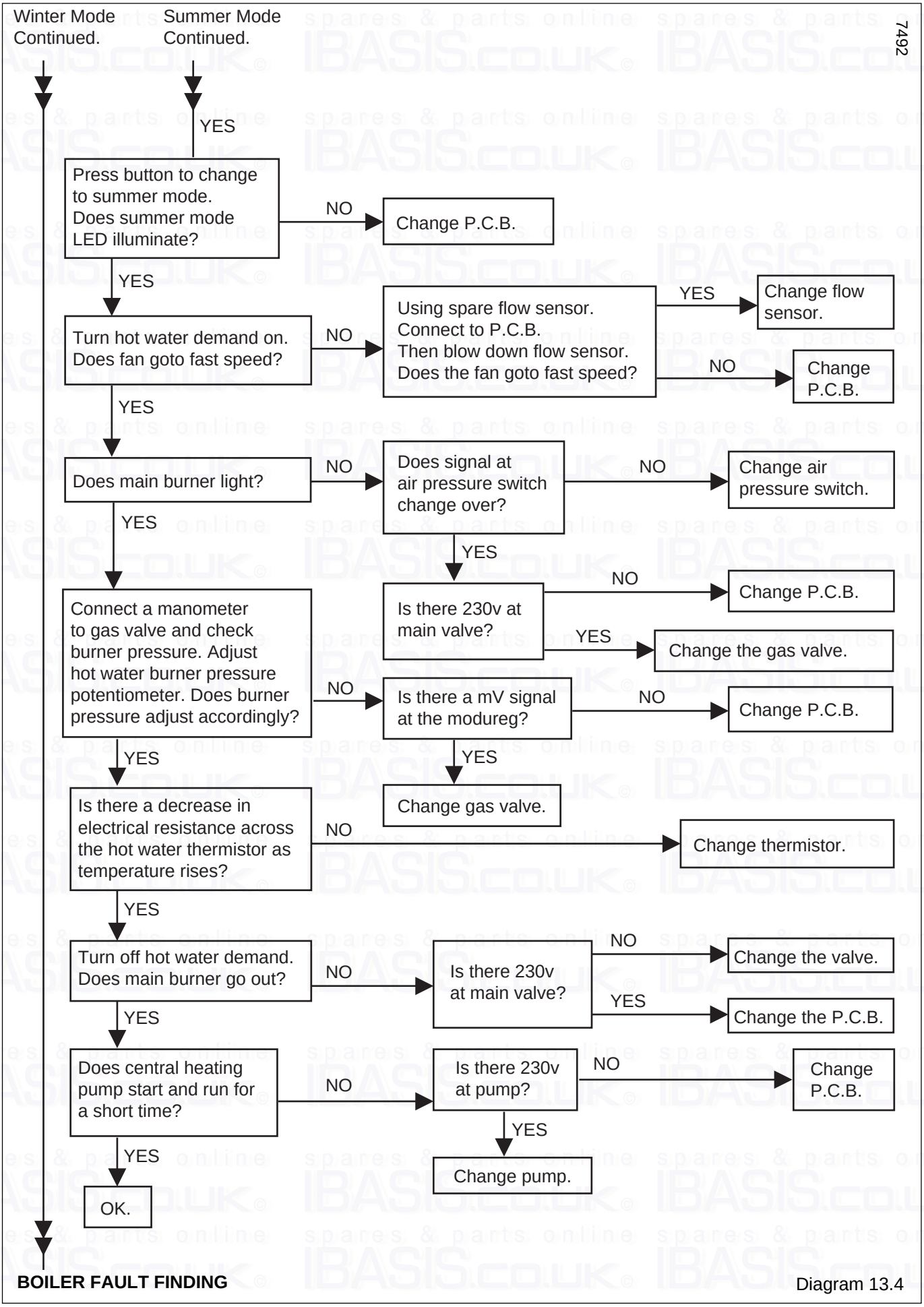

BOILER FAULT FINDING

Diagram 13.4

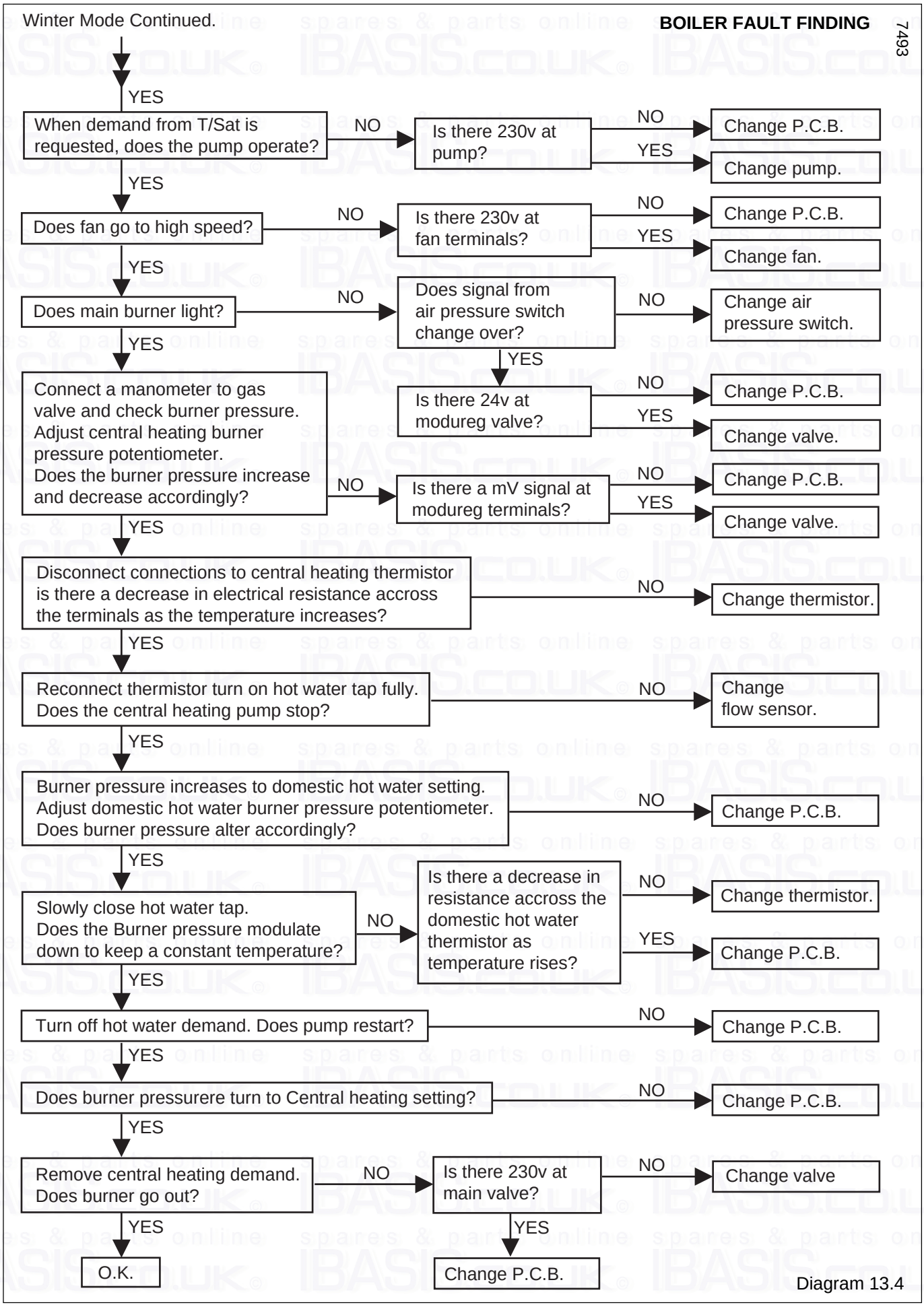
Winter Mode Continued.
BOILER FAULT FINDING
7493
YES
When demand from T/Sat is requested, does the pump operate?
NO
Is there 230v at pump?
NO
Change P.C.B.
YES
Change pump.
YES
Does fan go to high speed?
NO
Is there 230v at fan terminals?
NO
Change P.C.B.
YES
Change fan.
YES
Does main burner light?
NO
Does signal from air pressure switch change over?
NO
Change air pressure switch.
YES
YES
Connect a manometer to gas valve and check burner pressure. Adjust central heating burner pressure potentiometer. Does the burner pressure increase and decrease accordingly?
Is there 24v at modureg valve?
NO
Change P.C.B.
YES
Change valve.
NO
Is there a mV signal at modureg terminals?
NO
Change P.C.B.
YES
Change valve.
YES
Disconnect connections to central heating thermistor is there a decrease in electrical resistance accross the terminals as the temperature increases?
NO
Change thermistor.
YES
Reconnect thermistor turn on hot water tap fully. Does the central heating pump stop?
NO
Change flow sensor.
YES
Burner pressure increases to domestic hot water setting. Adjust domestic hot water burner pressure potentiometer. Does burner pressure alter accordingly?
NO
Change P.C.B.
YES
Slowly close hot water tap. Does the Burner pressure modulate down to keep a constant temperature?
NO
Is there a decrease in resistance accross the domestic hot water thermistor as temperature rises?
NO
Change thermistor.
YES
Change P.C.B.
YES
Turn off hot water demand. Does pump restart?
NO
Change P.C.B.
YES
Does burner pressurere turn to Central heating setting?
NO
Change P.C.B.
YES
Remove central heating demand. Does burner go out?
NO
Is there 230v at main valve?
NO
Change valve
YES
YES
O.K.
Change P.C.B.

Diagram 13.4

7462

With the boiler cold, check connections of the thermocouple, boiler overheat cut-off and gas valve. Disconnect overheat cut-off connectors at points A and B at the gas valve, see diagram. Test continuity of the overheat cut-off. Is there continuity?

NO → Faulty boiler overheat cut-off, renew.

YES ↓

Re-connect boiler overheat cut-off to points A and B. Disconnect thermocouple at point D of the gas valve. Test continuity between point C and the body of the gas valve. Is there continuity?

YES → Faulty cut-off connectors into gas valve. Either at A or C. Renew where faulty.

NO ↓

Test continuity of thermocouple between inner point D and point E. Is there continuity?

NO → Faulty thermocouple, renew.

YES ↓

Thermocouple and boiler overheat circuit satisfactory.

2313S

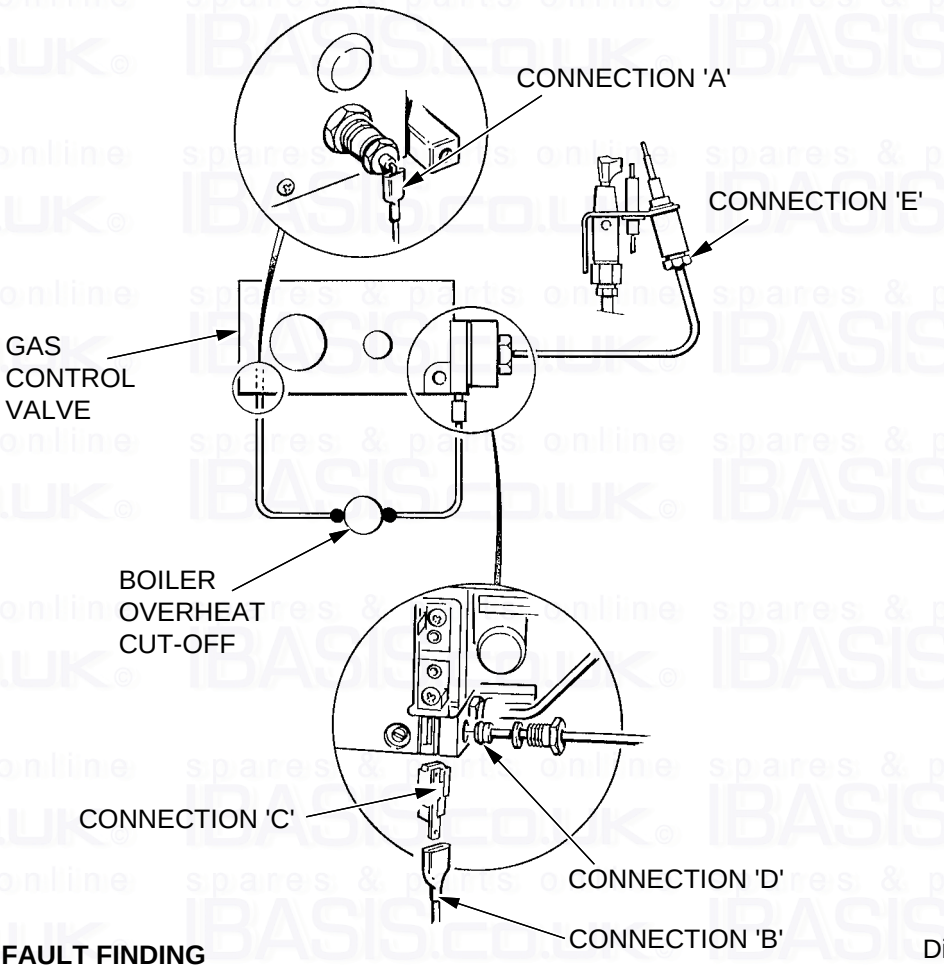

THERMOCOUPLE FAULT FINDING

Diagram 13.5

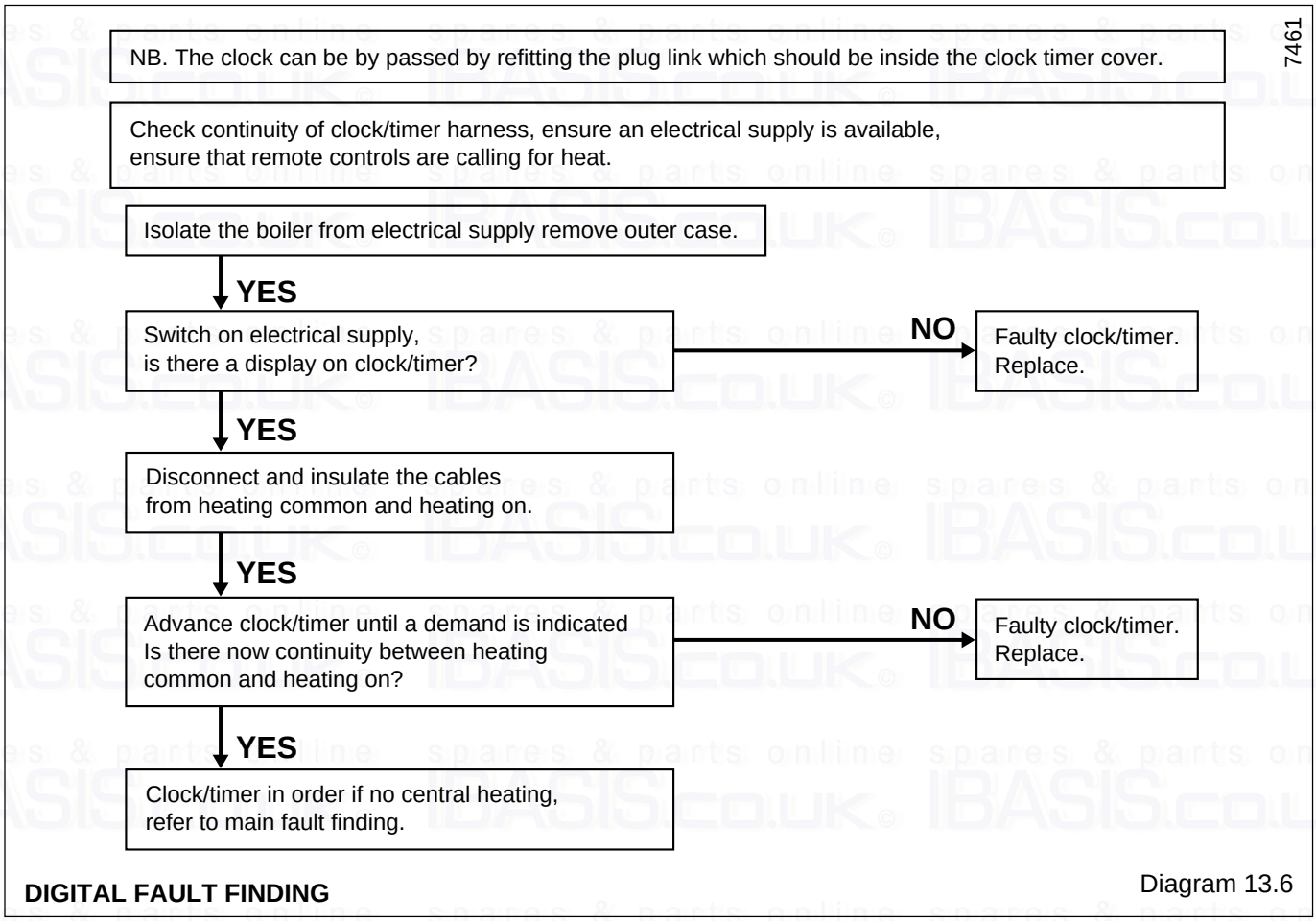

DIGITAL FAULT FINDING

Diagram 13.6

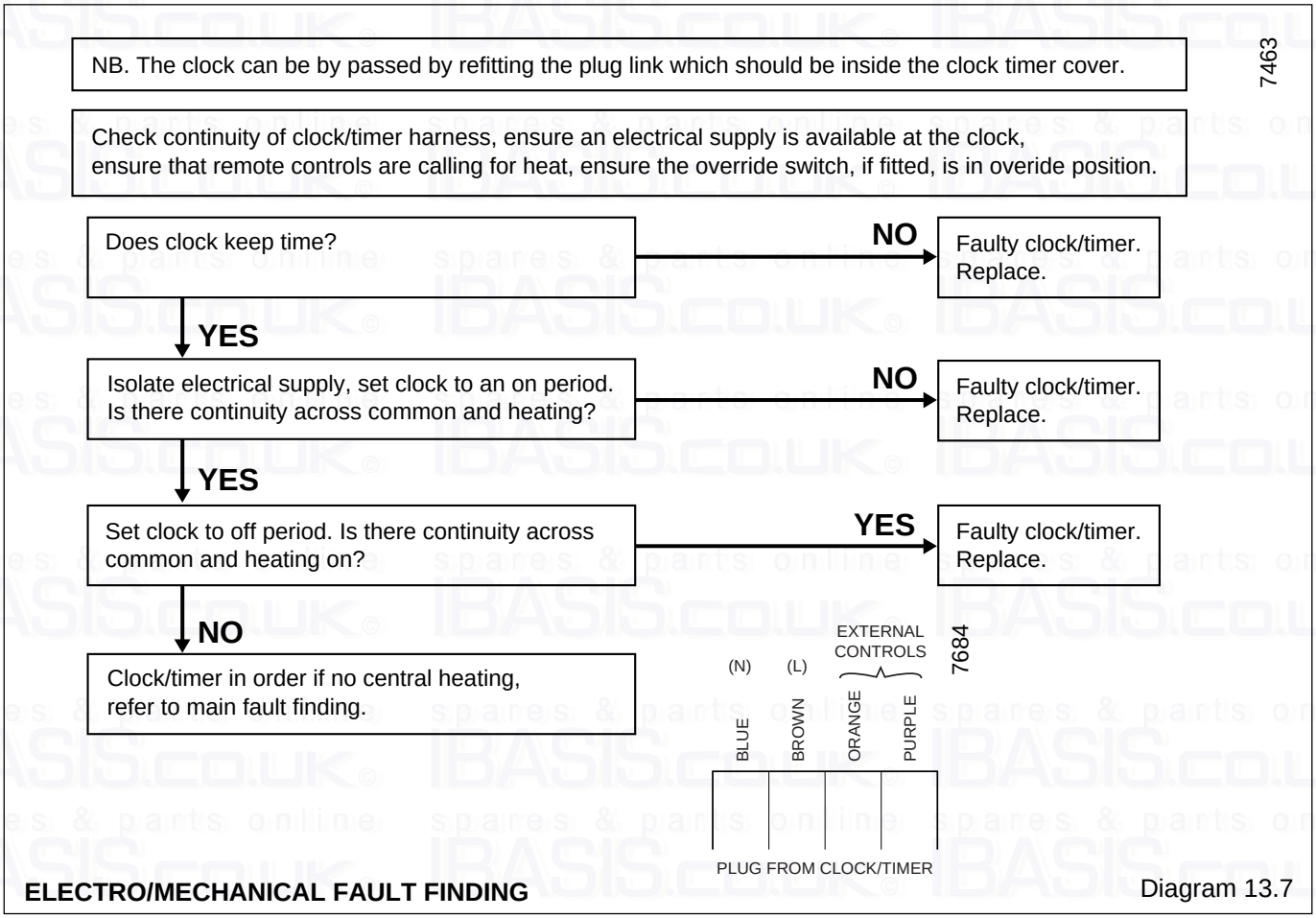

ELECTRO/MECHANICAL FAULT FINDING

Diagram 13.7

14.1 Fan

Before starting refer to Section 11.

Disconnect the two electrical connectors at the fan by pulling the boots not the wires, see diagram 8.2.

Disconnect the two air pressure switch flexible tubes from the fan.

Remove the fan, secured with two screws at the front and gently ease the fan from the flue elbow and rear bracket.

To fit the fan, locate it into the rear bracket and ease the fan into the flue outlet, secure with the two screws.

The polarity of the two electrical connectors is not important.

14.2 Main Burner

Before starting refer to Section 11.

Remove the two screws securing the flue collector, see diagram 14.1.

Remove the combustion chamber front panel, secured with four screws.

Open the controls cover door, see diagram 4.

Remove the two screws securing the controls facia, see diagram 9.1.

Hinge the control facia open.

Separate the pilot assembly from the main burner secured with two screws and washers, see diagram 14.2.

Remove the sealing gland, see diagram 14.2.

Remove the burner bracket securing screw, wing nut and bracket, see diagram 14.2.

Remove the main burner from the main injector at the rear. Tilt the burner up and slide in channel forwards, easing the pilot assembly forwards to clear, taking care not to damage the combustion chamber insulation or the pilot burner assembly.

When refitting make sure that the main burner is fitted correctly on assembly, located on the main injector and horizontal, the tips of the rearmost blade under the two burner guides.

Locate the combustion chamber front panel under the front edge of the flue hood on assembly, then secure all screws and wing nut.

Test pilot for gas soundness with suitable leak detection fluid with the gas control knob depressed.

14.3 Main Injector

Before starting refer to Section 11.

Remove the main burner, refer to Section 14.2.

Unscrew the main injector, see diagram 14.3.

Fit the new sealing washer supplied, to ensure gas soundness, when fitting the main injector.

14.4. Pilot Burner

Before starting refer to Section 11.

Remove the main burner refer to Section 14.2.

Remove the sealing angle, secured with a single screw, see diagram 14.2.

Remove the spark electrode, secured with a spring clip, see diagram 14.2.

Disconnect the thermocouple nut from the pilot burner.

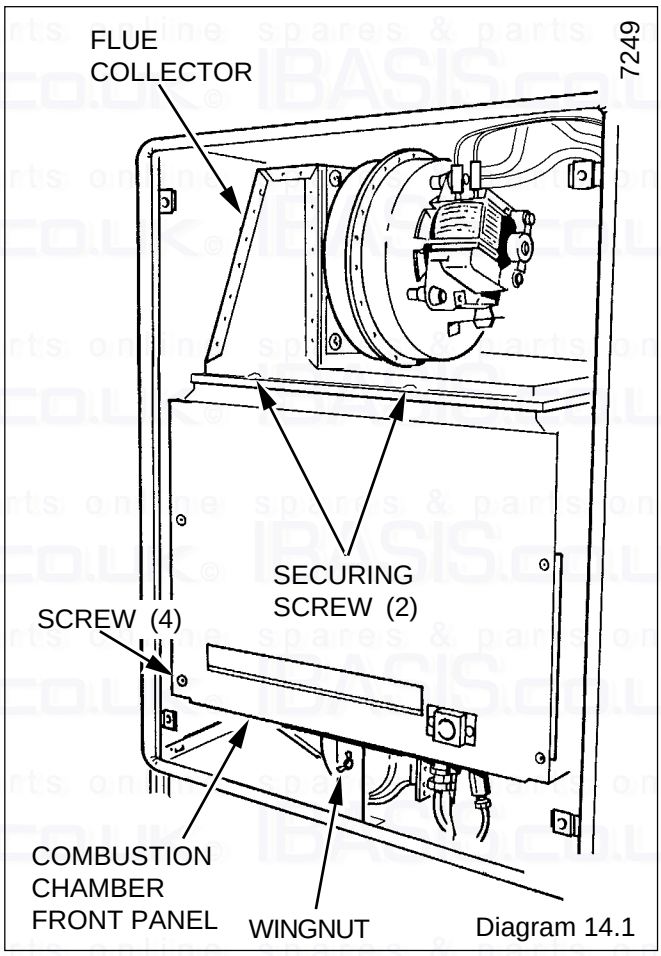

Diagram 14.1

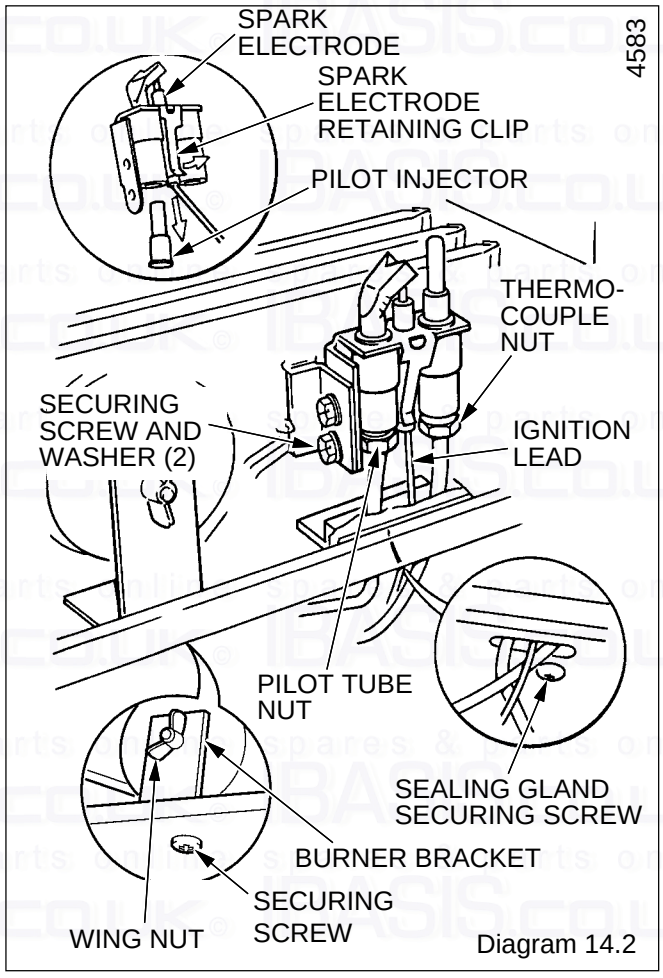

Diagram 14.2

Disconnect the pilot supply tube, holding the pilot injector hexagon with another spanner, then remove the pilot burner.

Check the spark gap upon assembly, see diagram 14.4.

Make sure the pilot injector is fitted.

Test joints for gas soundness with suitable leak detection fluid with the gas control knob depressed.

14.5 Spark Electrode

Before starting, refer to Section 11.

Slacken the sealing angle, secured with a single screw, see diagram 14.2.

Remove the spark electrode, secured with a spring clip, see diagram 14.2.

Ease the spark electrode through the sealing angle.

Open the controls cover door. Remove the two screws securing the controls facia, see diagram 9.1.

Hinge the control fascia open.

Disconnect the ignition lead from the piezo unit, see diagram 14.9.

Check the spark gap upon the assembly, see diagram 14.4.

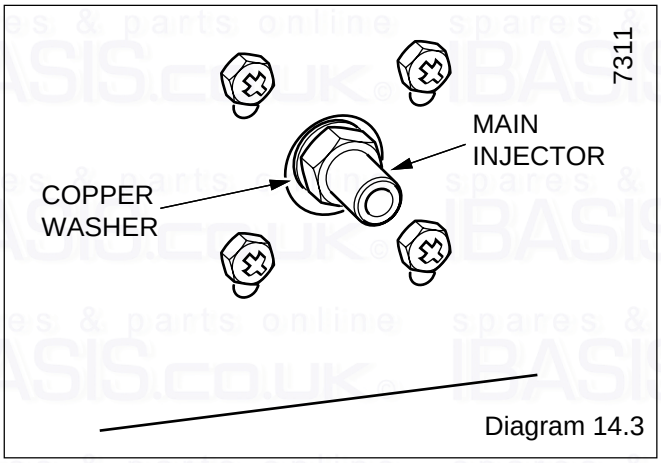

Diagram 14.3

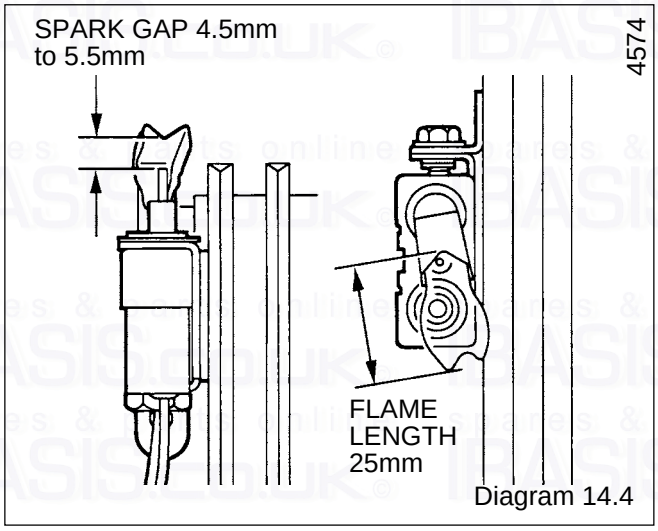

Diagram 14.4

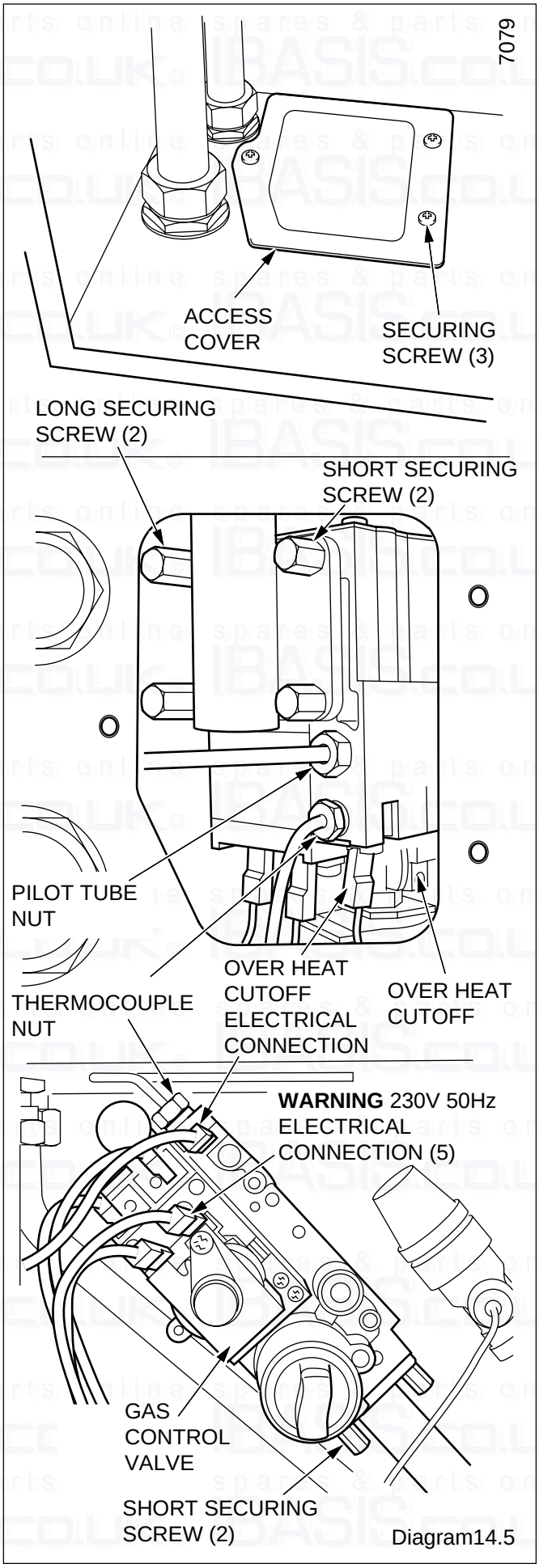

Diagram14.5

14.6 Pilot Injector

Before starting, refer to Section 11.

Remove the sealing angle, secured with a single screw, see diagram 14.2.

Remove the spark electrode, secured with a spring clip, see diagram 14.2.

Disconnect the thermocouple nut from the pilot burner.

Disconnect the pilot supply tube, holding the pilot injector hexagon with another spanner, then remove the pilot burner.

Remove the pilot injector from the pilot assembly by unscrewing it.

Check the pilot flame length on relighting, see diagram 14.4.

Test pilot for gas soundness with suitable leak detection fluid with the gas control knob depressed.

14.7 Thermocouple

Before starting refer to Section 11.

Open the controls cover door. Remove the two screws securing the controls facia, see diagram 9.1.

Hinge the control fascia open.

Remove the main burner, refer to Section 14.2.

Remove the sealing angle secured with a single screw, see diagram 14.2.

Remove the access cover in the base of the combustion chamber secured with three screws, see diagram 14.5.

Disconnect the thermocouple at the gas control valve and pilot assembly, see diagram 14.2 and 14.5.

Remove the thermocouple.

Make sure that the overheat cutoff connector is in place in the slot of the gas control valve when fitting the thermocouple. Do not tighten the thermocouple nut more than a quarter turn beyond finger tight or make any tight bends in the thermocouple capillary.

Test joints for gas soundness with suitable leak detection fluid with the gas control knob depressed.

14.8 Central Heating Boiler Overheat Cutoff

Before starting refer to Section 11.

Open the controls cover door. Remove the two screws securing the controls facia, see diagram 9.1.

Hinge the control fascia open.

Disconnect the overheat cutoff electrical connectors positioned at the front and rear of the gas control valve, see diagrams 14.5 and 14.7.

Unclip to remove the overheat cutoff, see diagram 14.8.

14.9 Domestic Hot Water Boiler Overheat Cutoff

Before starting refer to Section 11.

Open the controls cover door, see diagram 4 user instructions.

Remove the two screws securing the controls facia, see diagram 9.1.

Hinge the control fascia open.

Disconnect the overheat cutoff electrical connectors, see diagram 14.8.

Remove the securing screws to release the overheat cutoff.

14.10 Domestic Hot Water Thermistor.

Before starting, refer to Section 11.

Open the controls cover door. Remove the two screws securing the controls facia, see diagram 9.1.

Hinge the control fascia open.

Disconnect the electrical connector at the domestic hot water thermistor, see diagram 14.8.

Unclip the domestic hot water thermistor from the flow pipe.

14.11 Central Heating Hot Water Thermistor.

Before starting, refer to Section 11.

Open the controls cover door. Remove the two screws securing the controls facia, see diagram 9.1.

Hinge the control facia forward.

Disconnect the electrical connector at the domestic hot water thermistor, see diagram 14.8.

Unclip to remove the domestic hot water thermistor from the flow pipe.

14.12 Transformer

Before starting, refer to Section 11.

Open the controls cover door. Remove the two screws securing the controls facia, see diagram 9.1.

Hinge the control fascia open.

Disconnect the inline electrical connectors from the transformer, see diagram 14.8.

Remove the transformer, noting the correct position.

To connect the transformer cables correctly, see diagram 14.25.

14.13 Fan Resistor

Before starting, refer to Section 11.

Disconnect the electrical connectors from the resistor, see diagram 14.6.

Remove the resistor, noting the correct position.

To connect the resistor cables correctly, see diagram 14.25.

14.14 Piezo Unit

Before starting refer to Section 11.

Open the controls cover door. Remove the two screws securing the controls facia, see diagram 9.1.

Hinge the control fascia open.

Disconnect the ignition and earth leads at the piezo unit.

Remove the piezo unit, see diagram 14.9.

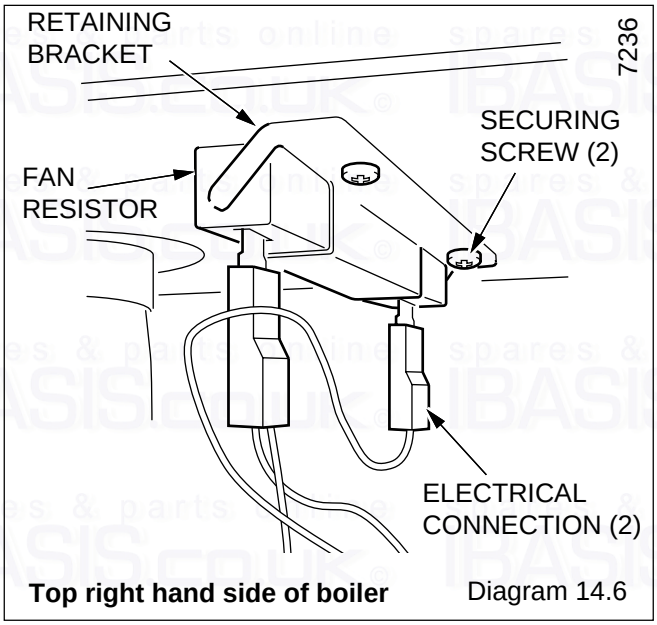

Top right hand side of boiler Diagram 14.6

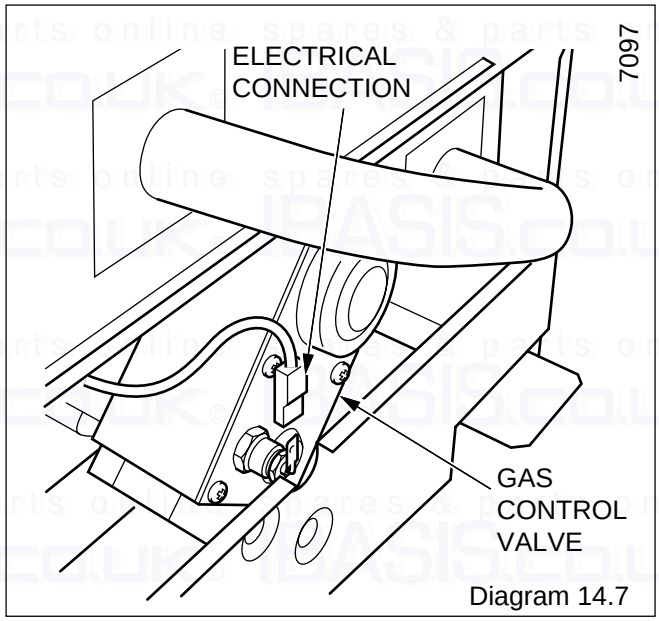

Diagram 14.7

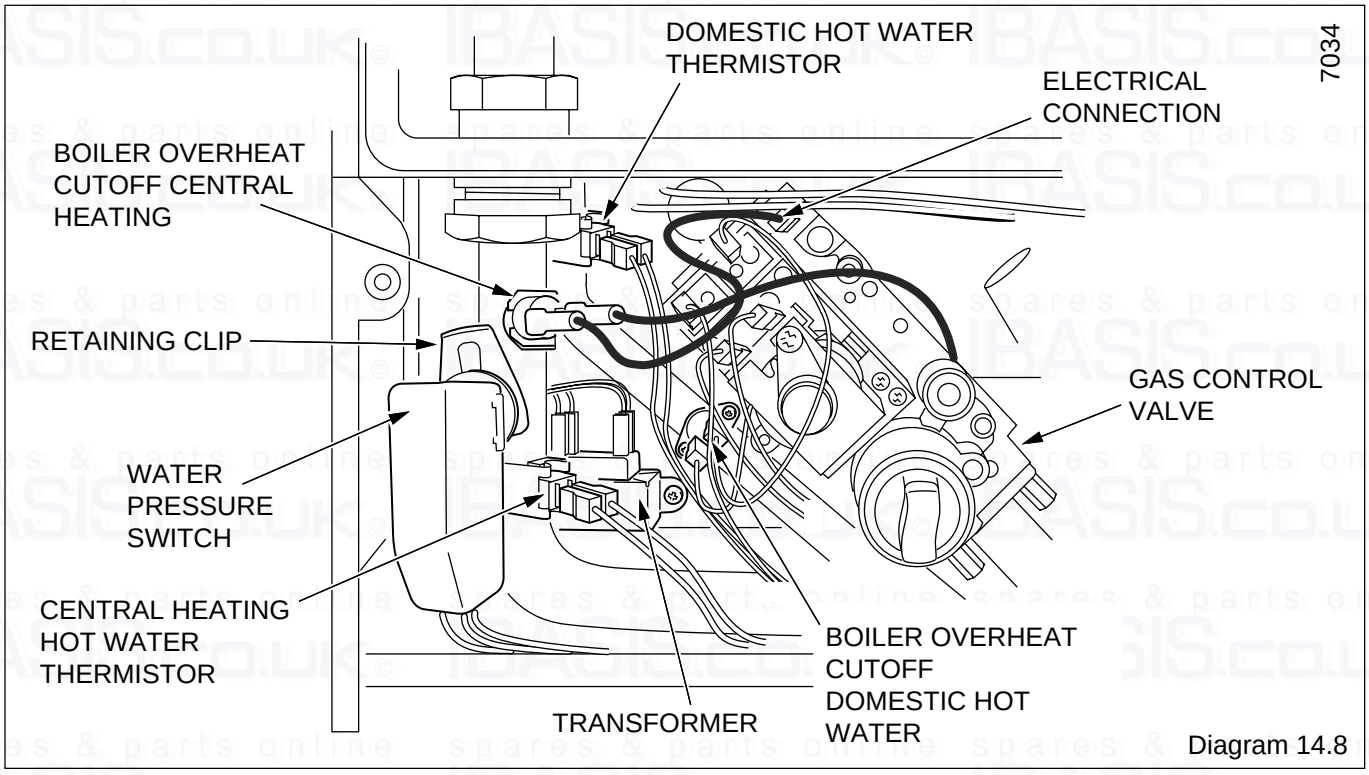

Diagram 14.8

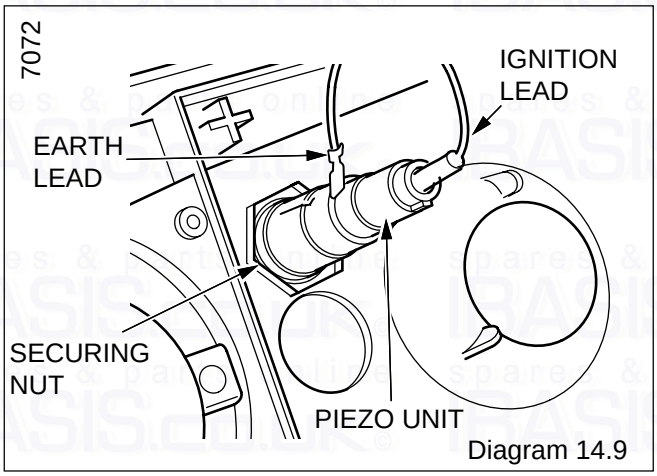

Diagram 14.9

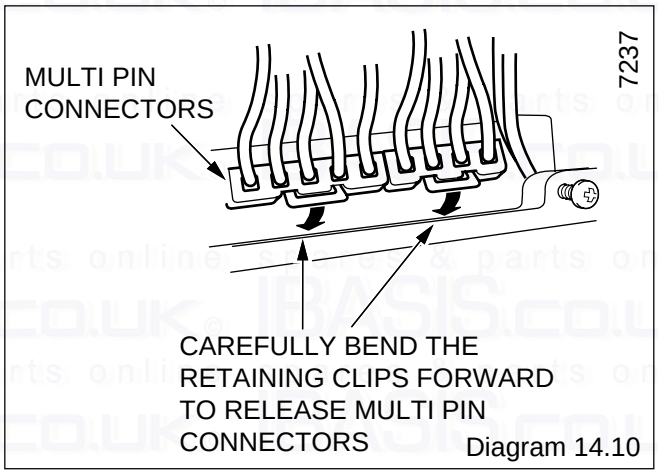

Diagram 14.10

14.15 Control Board

Before starting refer to Section 11.

Open the controls cover door. Remove the two screws securing the controls facia, see diagram 9.1.

Hinge the control fascia open.

Remove the cable entry covers, see diagram 10,2.

Disconnect the multi-pin connectors retained by clips, see diagram 14.10.

Remove the controls board cover securing screws and remove cover, see diagram 10.2.

Disconnect the remaining multi-pin connector retained by a clip.

Remove the control board securing screw, see diagram 14.11.

Remove the control board from the support posts, see diagram 14.11.

THE MAIN CONTROL BOARD MUST BE KEPT IN THE ANTI STATIC HOLDER UNTIL IMMEDIATE REQUIREMENT.

When replacing the main control board check and if necessary adjust the main burner gas pressure in both the hot water and central heating modes. Refer to “Commissioning” in the Installation Instructions.

4.16 Pressure Gauge

Before starting, refer to Section 11.

Open the controls cover door. Remove the two screws securing the controls facia, see diagram 9.1.

Hinge the control fascia open.

Release the water pressure and drain the central heating circuit of the boiler, refer to Section 11.3 and 11.6.

Disconnect the pressure gauge connection from the safety valve, discard the washer, see diagram 14.12.

Remove the pressure gauge, see diagram 14.13.

Locate the supplied washer under the pressure gauge connection when refitted to the safety valve.

IMPORTANT NOTE: Make sure the capillary follows the original route avoiding kinks and sharp bends.

14.17 Gas Control Valve

Before starting refer to Section 11.

Remove the case base, see diagram 10.4.

Open the controls cover door. Remove the two screws securing the controls facia, see diagram 9.1.

Hinge the control fascia open.

Remove the main burner refer to Section 14.2.

Remove the gas control knob.

Remove the access cover in the base of the combustion chamber secured with three screws, see diagram 14.5.

Disconnect the five electrical connectors, four at the front of the gas control valve and one at the rear, see diagrams 14.5 and 14.7.

Disconnect the thermocouple at the gas control valve, see diagram 14.5.

Disconnect the pilot supply tube at the gas control valve, see diagram 14.5.

Disconnect the gas supply union at the gas service cock, see diagram 8.4.

Remove the four extended hexagon screws at the gas control valve, see diagram 14.5.

Pull the gas control valve forward releasing it from the two rear support pins.

Remove the four extended screws attaching the manifold to the gas control valve

Transfer the pilot tube adapter, overheat cutoff connectors and manifold to the replacement valve. Discard the “O” rings and fit the new ones supplied, when fitting the gas valve.

To connect the gas control valve cables correctly, see diagram 14.25.

Light and adjust the boiler if necessary, refer to Commissioning in the Installation Instructions. Adjust the pilot flame if necessary, refer to Section 14.4, Pilot Burner.

Test joints for gas soundness with suitable leak detection fluid with the gas control knob depressed.

Check and adjust the main burner pressure in the hot water and central heating modes, refer to Commissioning in the Installation Instructions.

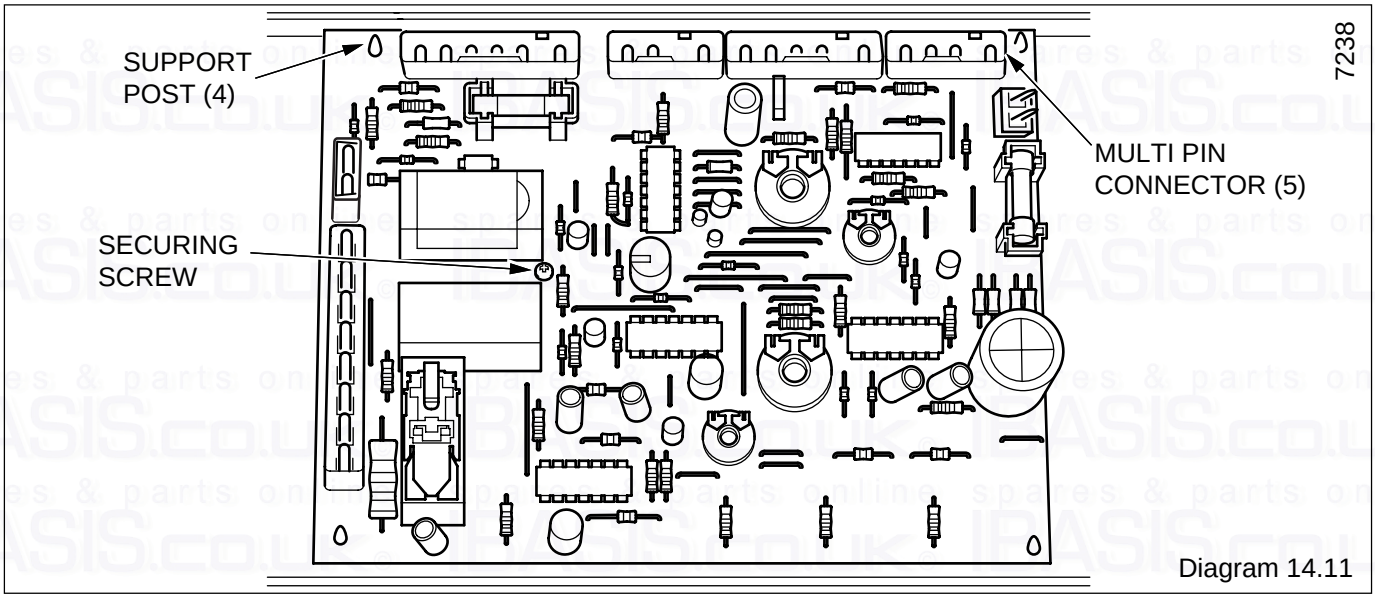

Diagram 14.11

14.18 Modulator

Before starting refer to Section 11.

Open the controls cover door. Remove the two screws securing the controls facia, see diagram 9.1.

Hinge the control fascia open.

Disconnect the two electrical connectors at the modulator, see diagram 14.14.

Remove the modulator, secured with two screws.

Discard the gasket and fit the new one supplied with the modulator.

Light, check and adjust the boiler if necessary, refer to Commissioning in the Installation Instructions.

Test joints for gas soundness with suitable leak detection fluid with the gas control knob depressed.

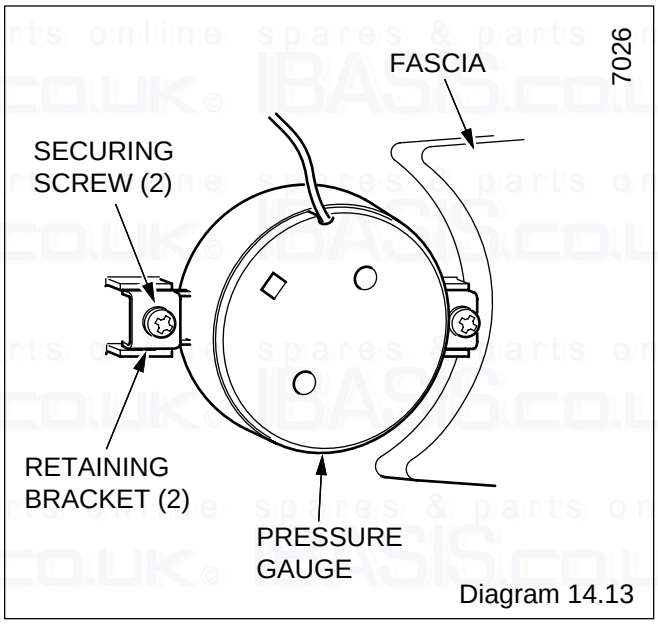

Diagram 14.13

14.19 Automatic Bypass Valve

Before starting refer to Section 11.

Remove the case base, see diagram 10.4.

Open the controls cover door. Remove the two screws securing the controls facia, see diagram 9.1.

Hinge the control fascia open.

Isolate the central heating flow and return, release the water pressure and drain, refer to Section 11.3 and 11.6.

Remove the pressure automatic bypass valve by disconnecting the union nuts, see diagram 14.15.

Discard the sealing washers and use the new ones supplied.

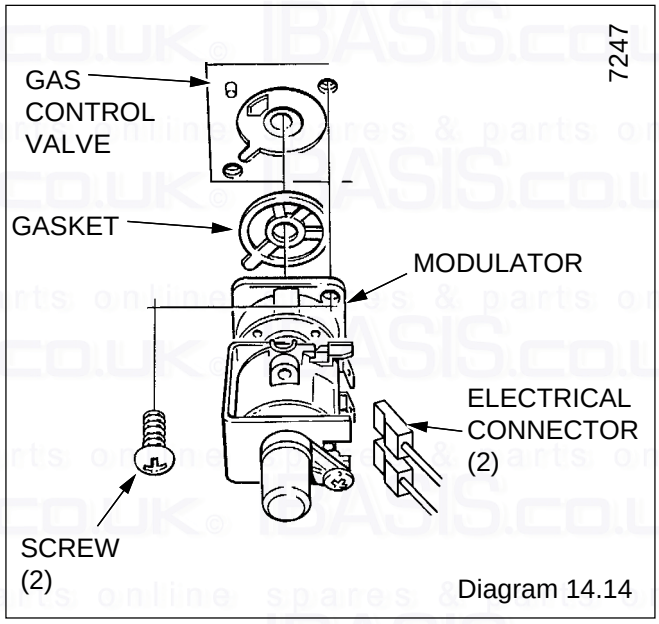

Diagram 14.14

14.20 Safety Valve

Before starting, refer to Section 11.

Remove the case base, see diagram 10.4.

Open the controls cover door. Remove the two screws securing the controls facia, see diagram 9.1.

Hinge the control fascia open.

Release the water pressure and drain, refer to Sections 11.3 and 11.6.

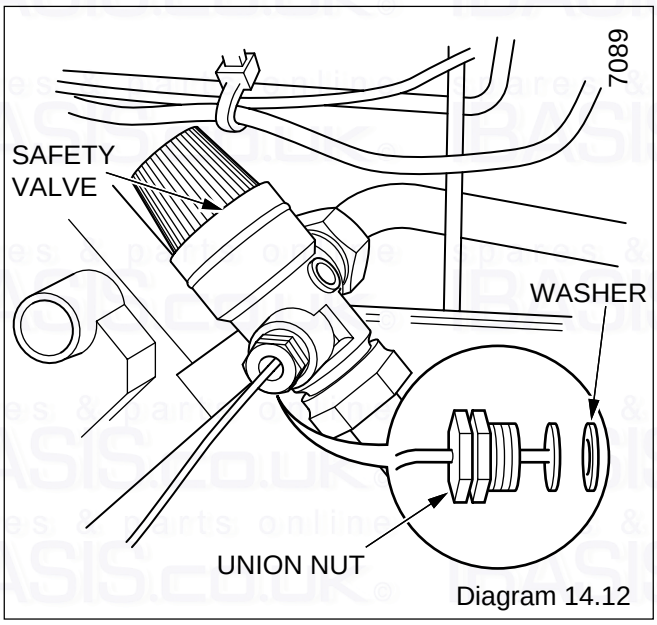

Diagram 14.12

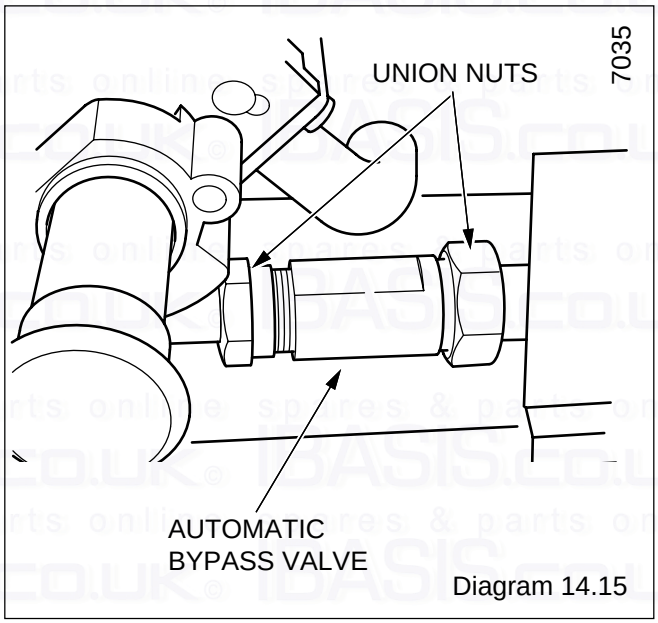

Diagram 14.15

Disconnect the pressure gauge connection from the safety valve, see diagram 14.12.

Disconnect the union nuts to release the safety valve, see diagram 14.12.

Discard the sealing washers and use the new ones supplied, on assembly.

Make up water loss and pressurise the system, refer to Commissioning in the Installation Instructions.

14.21 Water Inlet Filter

Before starting refer to Section 11.

Remove the case base, see diagram 10.4.

Isolate domestic water inlet, release the domestic water pressure and drain by opening the draw off lowest tap, refer to Section 11.3 and 11.6.

Disconnect the water inlet union nut to gain access to the filter, see diagram 8.4.

Clean or renew the filter as necessary.

Discard the sealing washer and use the new one supplied, on assembly.

14.22 Pump

Before starting refer to Section 11.

Open the controls cover door. Remove the two screws securing the controls facia, see diagram 9.1.

Hinge the control fascia open.

Remove the electrical plug at the pump, see diagram 14.16.

Release the water pressure and drain, refer to Sections 11.3 and 11.6.

Disconnect the pump at the top in the combustion chamber by removing the union nut and clip, see diagram 14.16.

Rlease the union nut at the bottom of the pump, see diagram 14.16.

It may be necessary to slacken the union nut at the automatic bypass and water cock.

Remove the pump.

Discard the sealing washer from the bottom fixing.

Make sure that the flow direction arrow is pointing upward, on the pump, when fitting the pump to the lower pipework use the new sealing washer provided.

Set the flow adjuster on the pump to maximum setting. The flow rate should be controlled by means of a valve in the heating system.

Make up water loss and pressurise the system, refer to Commissioning in the Installation Instructions.

Note: Should the pump fail to work, see diagram 14.25. If all is in order but the pump still does not work, remove the screw, see diagram 14.16 then turn the pump spindle to release any temporary seizure. DO NOT HIT THE SPINDLE.

14.23 Flow Sensor

Before starting refer to Section 11.

Remove the case base, see diagram 10.4.

Remove the main burner, refer to Section 14.2.

Refer to diagram 14.18.

Disconnect the domestic inlet pipe.

Remove the water flow sensor assembly.

Disconnect the electrical plug.

Unscrew the water flow sensor and remove.

Ensure sealing washers are in place when refitting.

14.24 Automatic Air Vent

Before starting refer to Section 11.

Release the water pressure and drain, refer to Sections 11.3 and 11.6.

Remove the automatic air vent, see diagram 14.17.

Discard the sealing washer and use the new one supplied, when fitting.

Slacken the small cap on the air vent. This MUST NOT be retightened.

Make up water loss and pressurise the system, refer to Commissioning in the Installation Instructions.

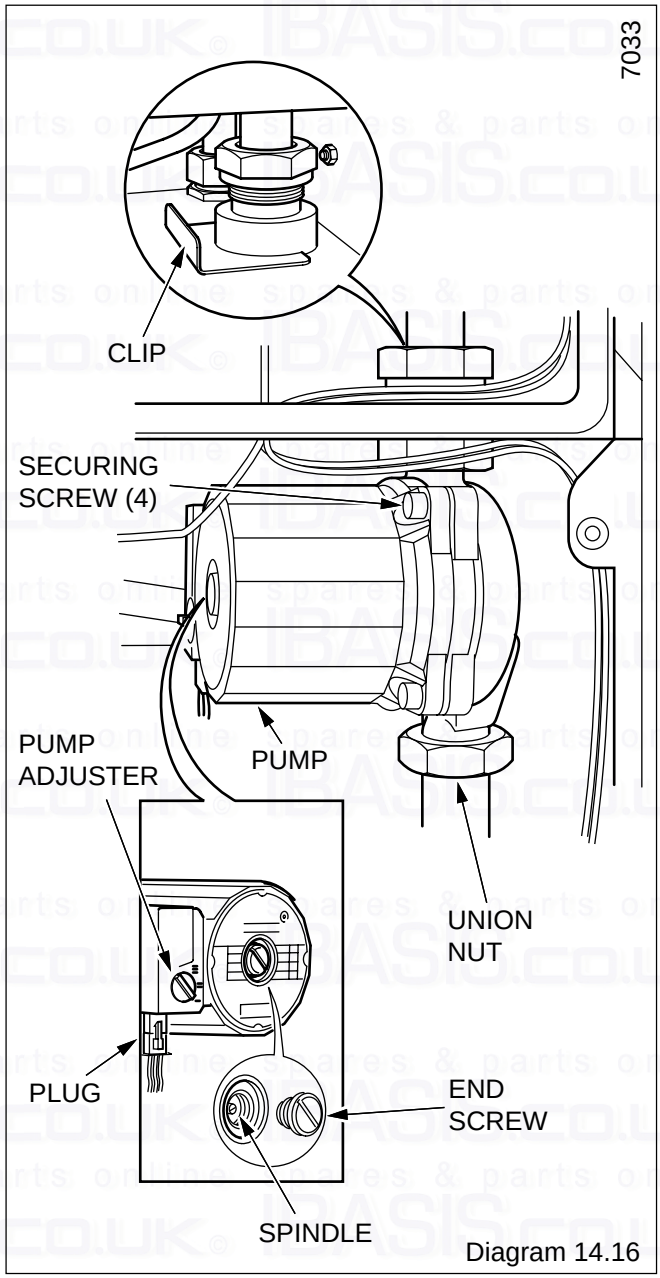

Diagram 14.16

14.25 Air Pressure Switch

Before starting refer to Section 11.

Disconnect the electrical connectors at the microswitch, see diagram 14.19.

Disconnect the air pressure tubes.

Remove pressure switch see diagram 14.19.

14.26 Heat Exchanger

Before starting refer to Section 11.

Release the water pressure and drain the domestic hot water and central heating, refer to Sections 11.3 and 11.6.

Remove the fan from the flue collector, refer to Section 14.1.

Remove the flue collector, secured with two screws, see diagram 14.2.

Remove the combustion chamber cover, see diagram 14.1.

Remove the main burner, refer to Section 14.2.

Remove the automatic air vent, see diagram 14.17.

If renewing the heat exchanger, transfer the air vent to the new one, using the new sealing washers supplied.

Disconnect the union nuts of the heat exchanger to remove it. Take care there may be some water retained in the heat exchanger.

Discard the sealing washers and use the new ones supplied, upon assembly.

Locate the raised location tabs on the combustion chamber sides into the slots on the heat exchanger, when fitting.

Make sure that the main burner is located on the main injector and is horizontal, the tips of the rear most blade under the two burner guides.

The combustion chamber front panel should be fitted loosely, then the flue collector also fitted loosely, ensuring that it is seated correctly on the heat exchanger and over the top edge of the front panel.

Locate the fan into the flue elbow and the clip at the rear, then secure with the two screws.

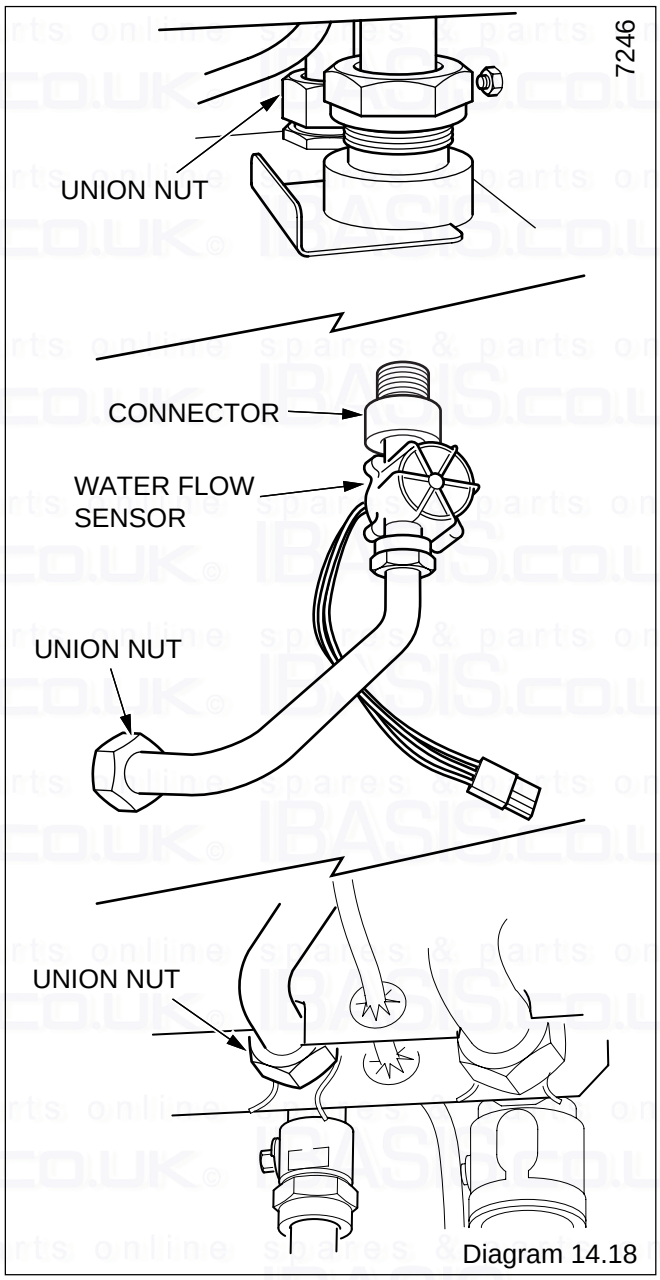

Diagram 14.18

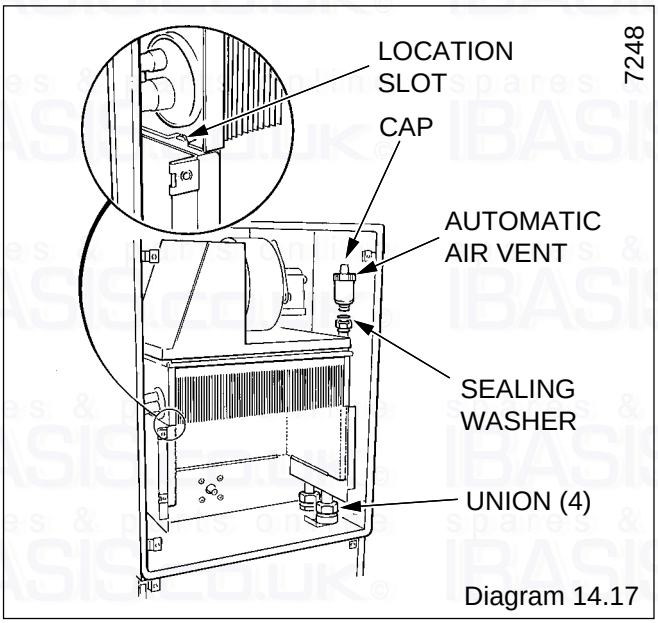

Diagram 14.17

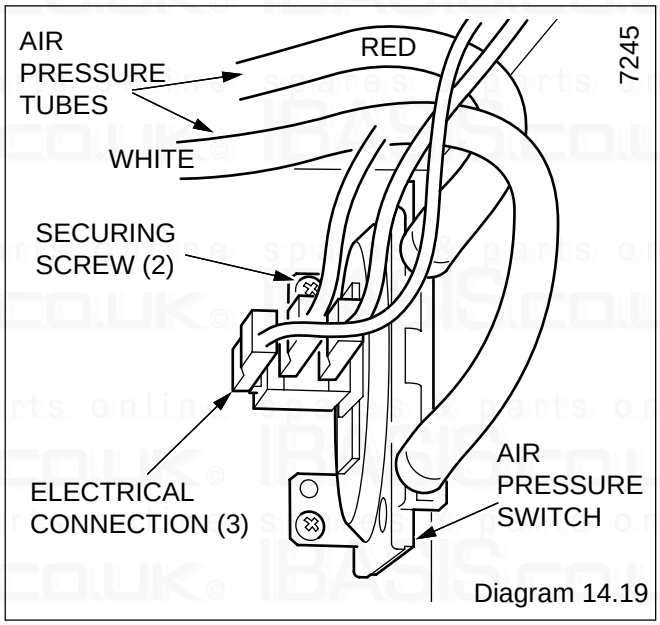

Diagram 14.19

Connect the cables, the polarity of the two connectors is not important.

Tighten the screws evenly to secure the flue collector and combustion chamber front panel.

Make up water loss and pressurise the system, refer to Commissioning in the Installation Instructions.

14.27 Combustion Chamber Insulation

Before starting refer to Section 11.

Remove the combustion chamber front panel, secured with four screws and a wing nut.

Remove the front insulation panel, secured with a clip, see diagram 14.20.

Slide out both side insulation pieces.

Pull the lower rear insulation forwards, then slide the upper rear insulation down from behind the heat exchanger.

To fit the flue collector, combustion chamber front panel and fan, refer to Section 14.1.

14.28 Expansion Vessel

Renewal of the expansion vessel requires the boiler to be removed from the wall. As an alternative, a separate expansion vessel of the same specification may be connected as close as possible to the boiler, leaving the original in position, refer to the Installation Instructions.

Remove the outer case front, side panels and inner case front, refer to Sections 11.4 and 11.5.

Release the water pressure and drain the domestic hot water and central heating, refer to Section 11.3 and 11.6.

Disconnect the boiler water connection union nuts at the front of the isolating valves, see diagram 8.4.

Disconnect the gas service cock union.

Disconnect the safety valve discharge pipe from the boiler.

Disconnect the mains supply cable at the connector block on the back of the controls fascia.

Remove the two screws at the service cock bracket. Pull the boiler from the isolating valves. Unhook the boiler at the top, easing the boiler from the flue outlet and lift off.

Carefully lay the boiler down on its side for access to the expansion vessel.

Disconnect the union nut connection, see diagram 14.21 and discard the sealing washer for the new one supplied.

Remove the expansion vessel, secured with three clamping screws.

Connect the union nut, when fitting the expansion vessel, before clamping it.

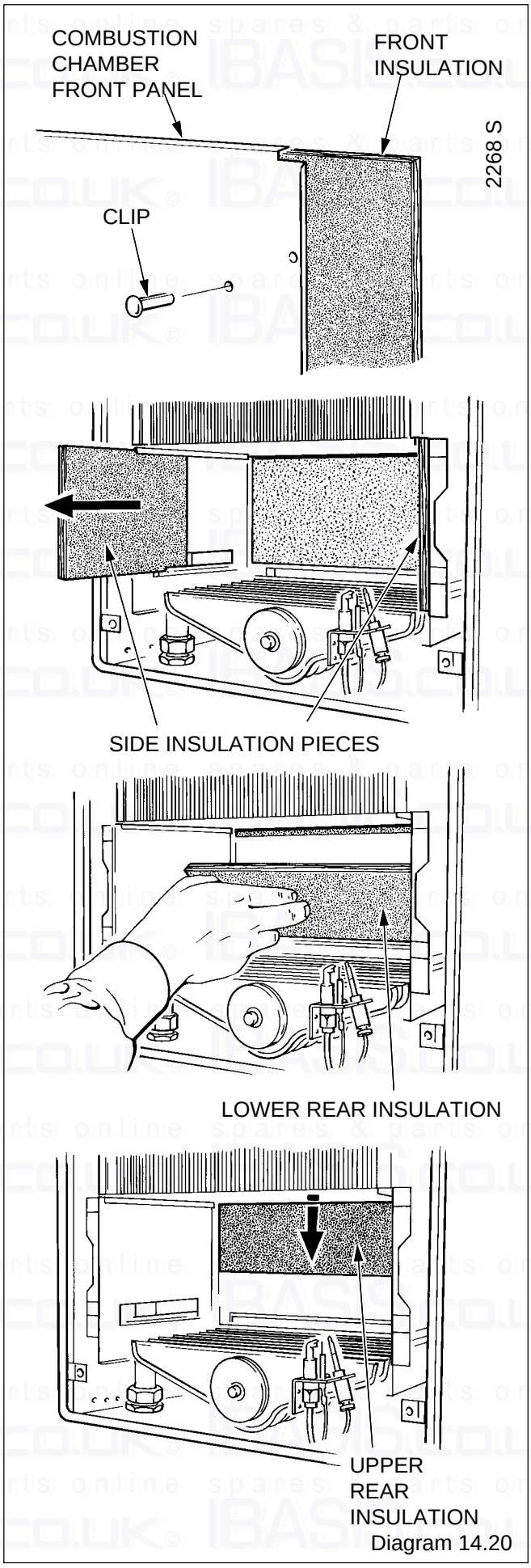

Diagram 14.20

14.29 Mini Expansion Vessel (If fitted)

Remove the mini-expansion vessel.

When refitting use the new sealing washer supplied.

14.30 Viewing Window (Combustion Chamber)

Remove outer case front as section 11.4.

Remove the viewing window, secured with two screws. When fitting a new window use the gasket provided, see diagram 14.22.

14.31 Viewing Window (Inner Case Front)

Remove the old self adhesive aluminium foil gasket and the old mica window. Replace with a new mica window. Peel off the backing paper and secure with new self adhesive aluminium foil gasket, see diagram 14.23. Ensure no air bubbles are trapped underneath the foil.

Important

Make sure that the mica window fully covers the opening and that the hole in the aluminium foil gasket is centred over opening.

14.32 Inner Case Front Seal

Remove outer case front as section 11.4.

Remove the old seal, clean out the old adhesive.

Glue the new seal into place, making sure that there are no breaks in it..

14.33 Clock/Timer - if fitted

Before starting refer to Section 11.

Remove the two screws securing the controls cover door and controls facia, see diagram 9.1.

Hinge the assembly open.

Remove the clock-timer cover, see diagram 11.2.

ELECTRO/MECHANICAL and DIGITAL clock/timer - Release securing screws, see diagram 14.24.

Disconnect electrical cables, remove the clock/timer, see diagram 14.24.

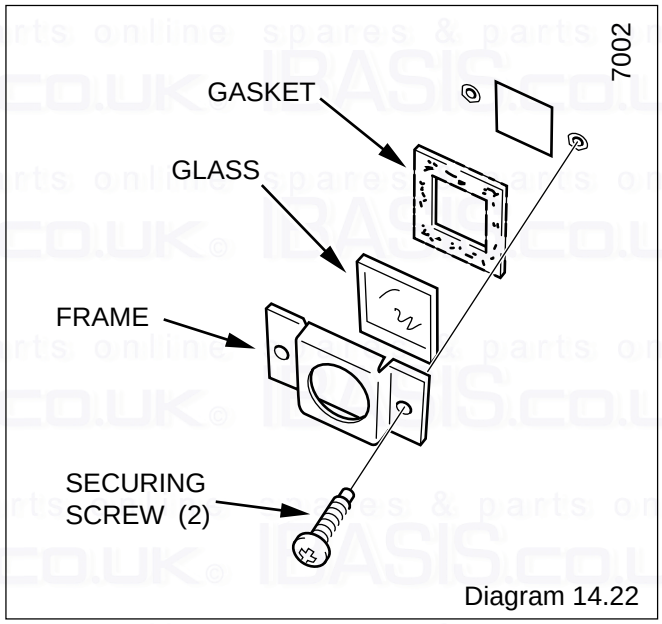

Diagram 14.22

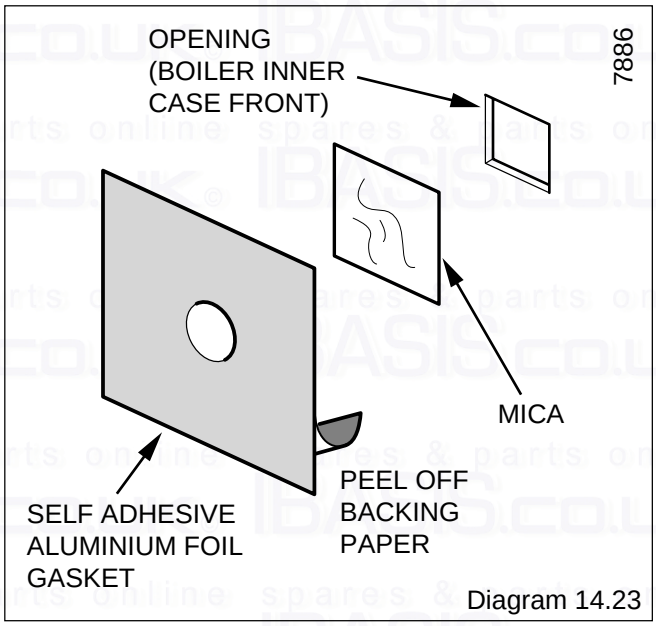

Diagram 14.23

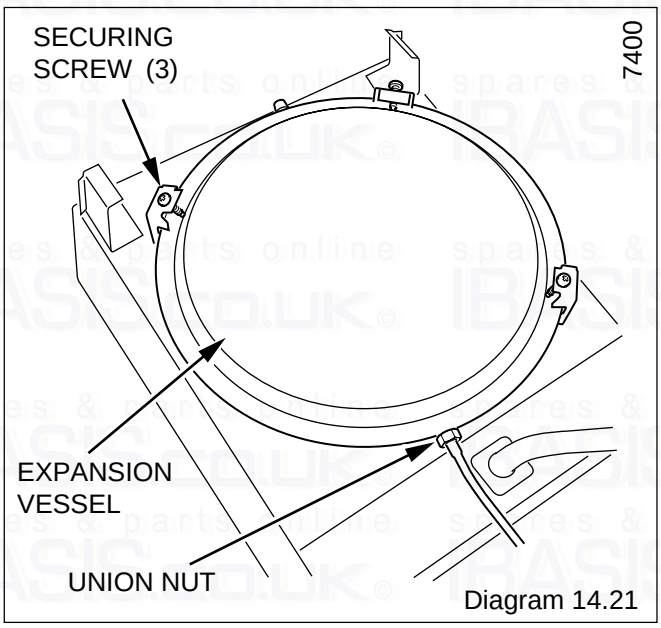

Diagram 14.21

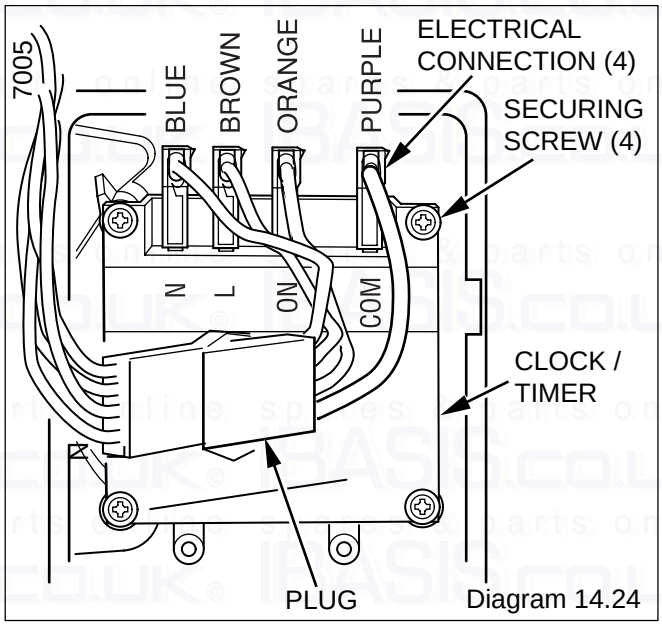

Diagram 14.24

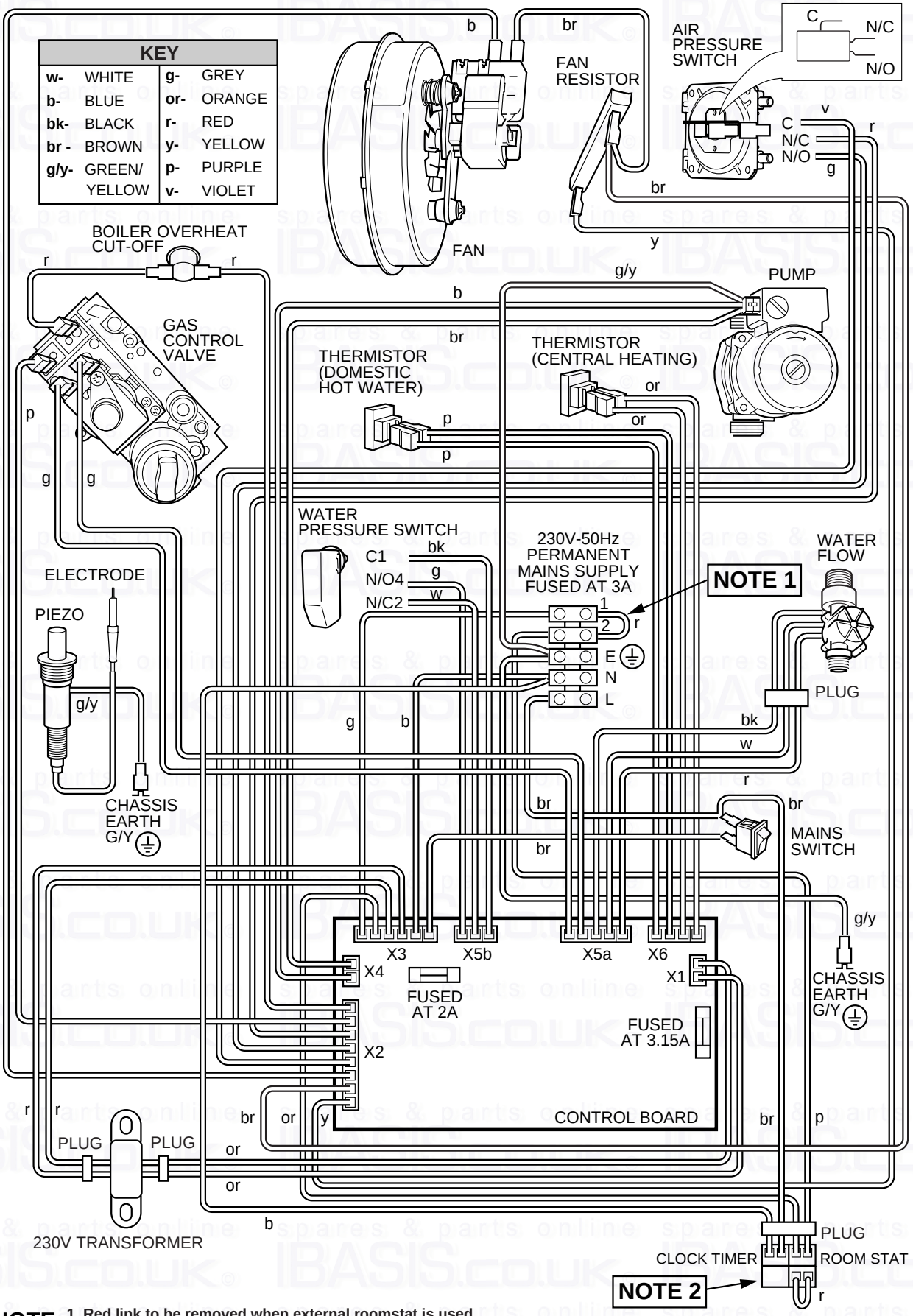

NOTE
1 Red link to be removed when external roomstat is used.
2 Plug C/W link to be removed when clock timer is used. (The removed plug to be left inside the clock timer cover.)

Diagram 14.25

15 Spare Parts

15.1 Part Identification

The key number in diagram 15.1 and the first column of the list will help identify the spare part.

15.2 Ordering

When ordering any spare part, please quote the part number and the description from the list together with the model name and serial number information from the data label.

The data label is positioned on the inner case front, see diagram 8.2 Installation Instructions.

Key No.	Part No.	Description	G.C. No.
1	457412	Fan assembly	E26742
2	205765	Main injector assembly	E26741
3	203433	Pilot burner	379485
4	202627	Spark electrode	278131
5	203518	Pilot injector	381656
6	202435	Thermocouple	378204
7	801183	Boiler overheat cutoff assembly	E27356
8	202529	Domestic hot water limit control	*****
9	202712	Piezo unit	E26688
10	204546	Pressure gauge assembly	E26683
11	227066	Control board (inc 16,17)	*****
12	202810	Transformer	E26700
13	801169	Gas Control valve assembly	E26726
14	227003	Thermistor Domestic Hot Water	*****
15	227002	Flow Sensor	E04063
16	202226	Fuse 2 type T2A x 20mm	278136
17	202240	Fuse 1 type 3.15ATx 20mm	278414
18	227071	Air Pressure switch	E26891
19	227083	Fan Resistor	*****
20	457068	Low Water Pressure Switch	E26723
21	227004	Thermistor Central Heating	E26743
22	800153	Automatic Air Vent (inc seal)	313285

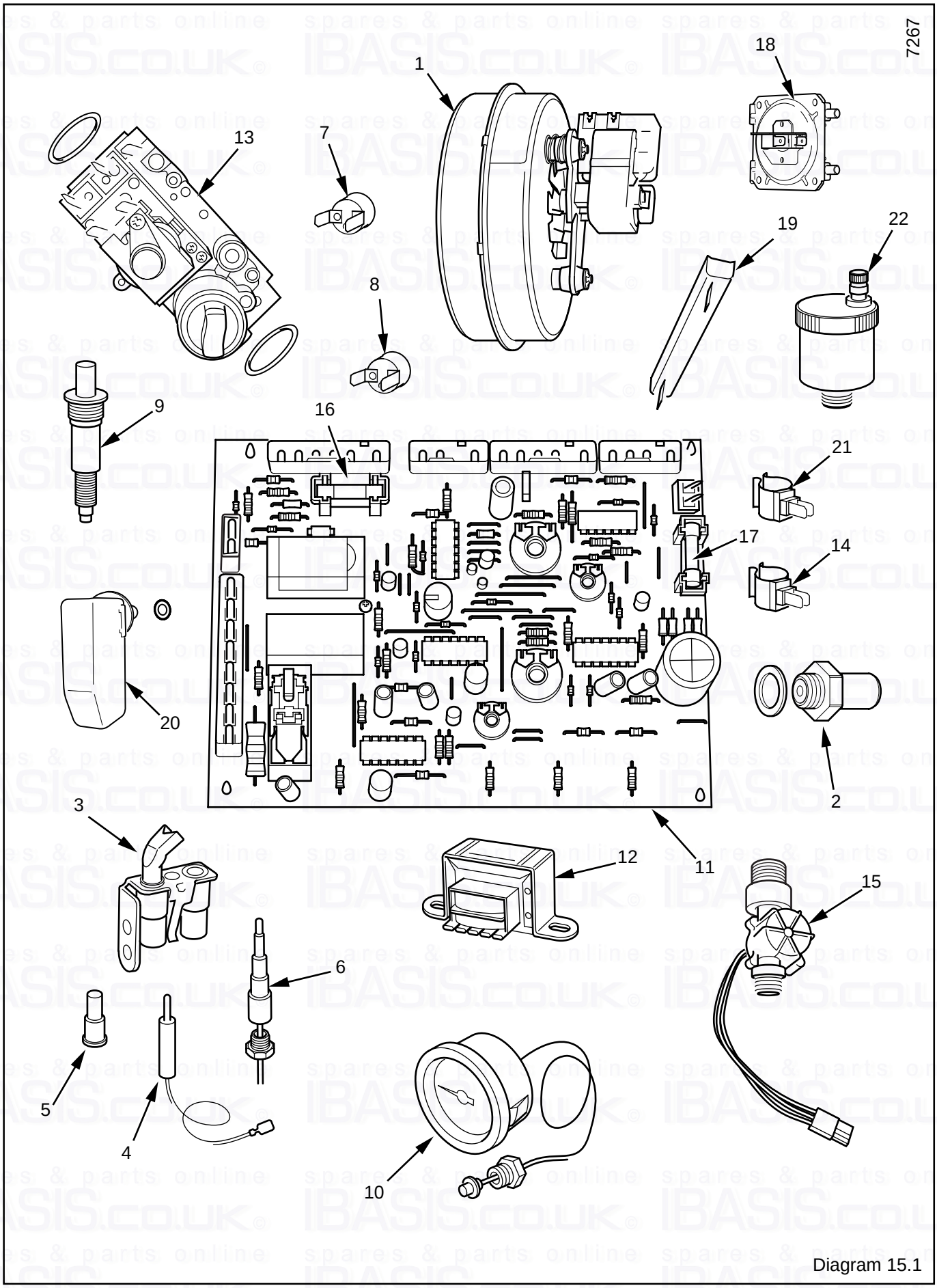

Diagram 15.1

Because of our constant endeavour for improvement, details may vary slightly from those shown in these instructions.