221482C.01.00

Glow-worm

Instructions for Use
Installation and Servicing

To be left with the user

Economy Plus 40 B

G.C. No. 41 319 02

Balanced Flue Boiler

CE benchmark™ BS 6332 BS 5258

This is a Cat I_{2H} Appliance

Reference in these instructions to British Standards and Statutory Regulations/Requirements apply only to the United Kingdom. For Ireland the rules in force must be used.

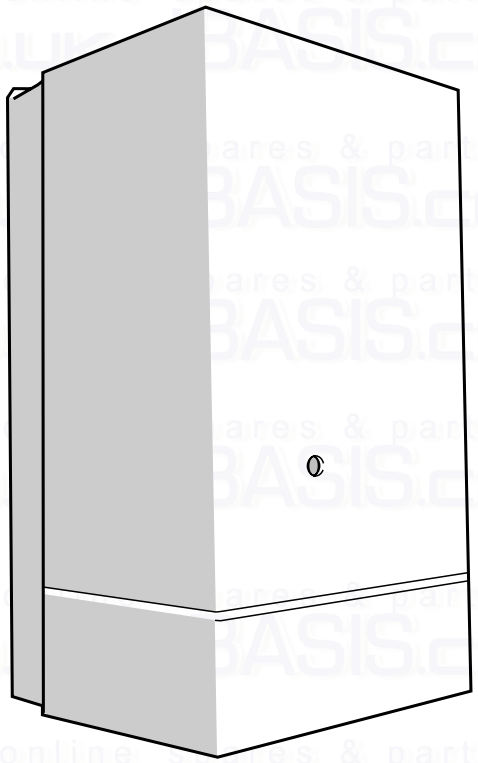

The instructions consist of three parts, User, Installation and Servicing Instructions, which includes the Guarantee Registration Card. The instructions are an integral part of the appliance and must, to comply with the current issue of the Gas Safety (Installation and Use) Regulations, be handed to the user on completion of the installation.

Guarantee Registration

Thank you for installing a new Glow-worm appliance in your home.

Glow-worm appliances' are manufactured to the very highest standard so we are pleased to offer our customers' a Comprehensive First Year Guarantee.

Attached to the center of these instructions is your Guarantee Registration Card, which we recommend you complete and return as soon as possible.

If this card is missing you can obtain a copy or record your registration by telephoning the Heatcall Customer Service number 01773 828100.

Our Guarantee gives you peace of mind plus valuable protection against breakdown by covering the cost of:

- ☑ ***All replacement parts***
- ☑ ***All labour charges***
- ☑ ***All call-out charges***

REGISTER YOUR GLOW-WORM APPLIANCE FOR 1ST YEAR GUARANTEE PROTECTION

CALL 0181 380 2555

HEATCALL *Customer Services: Tel: (01773) 828100 Fax: (01773) 828070*

One Contact Local Service

Hepworth Heating Ltd.,
Nottingham Road, Belper, Derbyshire. DE56 1JT
General/Sales enquiries:
Tel: (01773) 824141 Fax: (01773) 820569

Important Information

Testing and Certification

This boiler is tested and certificated for safety and performance. It is therefore important that no alteration is made to the boiler, without permission, in writing, from Hepworth Heating Ltd.

Any alteration not approved by Hepworth Heating Ltd., could invalidate the certification, boiler warranty and may also infringe the current issue of the Statutory Requirements, see Section 1.3.

CE Mark

This boiler meets the requirements of Statutory Instrument No. 3083 The boiler (Efficiency) Regulations, and therefore is deemed to meet the requirements of Directive 92/42/EEC on the efficiency requirements for new hot water boilers fired with liquid or gaseous fuels.

Type test for purposes of Regulation 5 certified by: Notified body 0086.

Product/productioncertifiedby: Notified body 0086.

The CE mark on this appliance shows compliance with:

1. Directive 90/396/EEC on the approximation of the laws of the Member States relating to appliances burning gaseous fuels.
2. Directive 73/23/EEC on the harmonization of the Laws of the Member States relating to the electrical equipment designed for use within certain voltage limits.
3. Directive 89/336/EEC on the approximation of the Laws of the Member States relating to electromagnetic compatibility.

INFORMATION FOR THE INSTALLER AND SERVICE ENGINEER.

Under Section 6 of The Health and Safety at Work Act 1974, we are required to provide information on substances hazardous to health.

Insulation and Seals

Ceramic fibre and glass fibre are used in insulation panels, rope and gaskets. The can cause irritation to skin, eyes and the respiratory tract.

If you have a history of skin complaint you may be susceptible to irritation. High dust levels are usual only if the material is broken.

Normal handling should not cause discomfort, but follow normal good hygiene and wash your hands before eating, drinking or going to the lavatory.If you do suffer irritation to the eyes or severe irritation to the skin seek medical attention.

Thermostat

This contains a very small amount of xylene in the sealed phial and capillary. If broken, under normal circumstances the fluid does not cause a problem, but in cases of skin contact, wash with cold water.
If swallowed drink plenty of water and seek medical attention.

CONTENTS	DESCRIPTION	SECTION	PAGE No.
INSTRUCTIONS FOR USE	Introduction		3
	Lighting the Boiler		4
INSTALLATION INSTRUCTIONS	General Data	1	5
	Flue & Ventilation	2	7
	Water Systems	3	8
	Flue and Appliance Preparation	4	10
	Boiler Installation	5	12
	Gas and Water Connection	6	13
	Electrical Wiring	7	13
	Commissioning	8	14
	Instructions to User	9	16
SERVICING INSTRUCTIONS	Servicing and Replacement Parts	10	16
	Fault Finding	11	19
	Spare Parts	12	24

Instructions for Use

General Notes and information

Please read these instructions and follow them carefully for the safe and economical use of your boiler

IMPORTANT NOTICE

This boiler is for use only on G20 gas.

The Gas Safety (Installation and Use) Regulations

In your own interests and that of safety it is the Law that ALL gas appliances are installed by a competent person in accordance with the above regulations.

Gas Leak or Fault

If a gas leak or fault exists or is suspected the boiler must be turned off.

Advice/help should be obtained from your installation or servicing company or the local gas undertaking.

Protection Against Freezing

If the boiler is to be out of use for any long period of time during severe weather conditions we recommend that the whole of the system, including the boiler be drained off to avoid the risk of freezing up. If an immersion heater is fitted to the domestic hot water cylinder make sure it is switched off.

If in doubt contact you installation or servicing company, especially if you have a sealed water system.

Maintenance

To ensure the continued efficient and safe operation of the boiler it is recommended that it is checked and serviced at regular intervals. The frequency of servicing will depend upon the particular installation and usage, but in general once a year should be enough.

If this appliance is installed in a rented property there is a duty of care imposed on the owner of the property by the current issue of the Gas Safety (Installation and Use) Regulations, Section 35.

It is the Law that servicing is carried out by a competent person.

To obtain service, please call your installer or Heatcall (Glow-worm's own service organisation) using the telephone number on the case tray.

Please be advised that the 'Benchmark' logbook should be completed by the installation engineer on completion of commissioning and servicing.

All CORGI Registered Installers carry a CORGI ID card, and have a registration number. Both should be recorded in your boiler Logbook. You can check your installer is CORGI registered by calling CORGI direct on :- 01256 372300.

Cleaning

WARNING. This appliance contains metal parts (components) and care should be taken when handling and cleaning, with particular regard to edges.

Clean the casing by wiping it over occasionally with a damp cloth or dry polishing cloth.

Do not use abrasive cleaners.

Boiler Spaces

The boiler must be positioned so that at least the minimum operational and servicing spaces are provided, see diagram 1.

If fixtures are placed close to the boiler they should be made removable for access.

Sufficient space must be left in front of the boiler for servicing.

Boiler in a Compartment

If the boiler is fitted in a compartment or a cupboard purpose built ventilation must be provided and kept clear. Do not use the enclosed space for storage.

Overheat Safety Device

The boiler is fitted with a safety cutoff device to prevent damage through overheating. Should the burner or pilot go out for no apparent reason, allow the system to cool down, then relight the boiler.

Should the problem persist, turn the boiler off and contact your installation or servicing company.

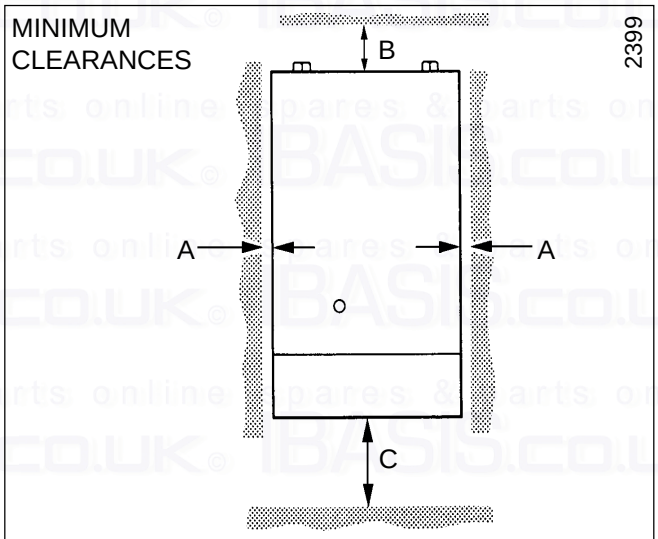

BALANCED FLUE BOILERS Minimum Clearances from Walls, Ceiling, Floor, Cupboards, etc.		Balanced Flue Model
A	L.H. and R.H. side of casing	5
B	Top of casing	75
C	Bottom of casing	150
D	Front of boiler (from a permanent surface)	305

CLEARANCES Diagram 1

Electrical Supply

WARNING. The boiler must be earthed.

Connection of the boiler and any system controls to the mains supply should be by one unswitched shuttered socket a 3A plug, both to the current issue of BS1363.

Alternatively, a 3A fused double pole isolating switch may be used, having a minimum double pole contact separation of 3mm in both poles, serving only the boiler and system controls.

The colours of three core cable are:

Brown - live, Blue - neutral, green and yellow - earth.

As the markings on your plug may not correspond with these colours, continue as follows:

The wire coloured blue must be connected to the terminal marked “N” or “Black”.

The wire coloured brown must be connected to the terminal marked “L” or “Red”.

The wire coloured green and yellow must be connected to the terminal marked “E”, “Green” or the earth symbol ⏚ .

Lighting the Boiler

CAUTION. If the pilot flame goes out, either intentionally or by accident, no attempt should be made to relight it for at least 3 minutes.

Slide the controls cover off and clear, see diagram 3.

Make sure that the electrical supply to the boiler is switched off.

Identify the controls by reference to diagram 2.

Turn thermostat knob “A” fully anti-clockwise to the OFF position.

Push and keep in gas control knob “B”.

Push and release igniter button “C” until the pilot burner lights, look through window “G”. When the pilot is alight keep the gas control knob “B” pushed in for about 15 seconds.

If the pilot does not light or fails to stay alight, wait for 3 minutes then repeat the lighting operation only this time keep the gas control knob “B” pushed in for a little longer.

When the pilot is alight and stable, switch on the electrical supply to the boiler.

Check that all external controls are calling for heat.

Turn the thermostat control knob “A” fully clockwise to “5” and the burner will light fully in about 3 to 5 seconds, look through window “G”.

Adjust thermostat knob to desired setting between “5” and “1”. “5” is about 82°C (180°F).

Replace controls cover.

To Turn the Boiler Off

For short periods, turn thermostat control knob “A” anti-clockwise until “O” is against the setting point. The pilot will remain alight, to relight the main burner turn thermostat control knob “A” clockwise to the desired setting between “1” and “5”.

For longer periods, turn the thermostat control knob “A” anti-clockwise until “O” is against the setting point. Slide the control button “B” to the left, the control will automatically reset. Switch off the electrical supply to the boiler.

To relight, follow the full lighting procedure given above.

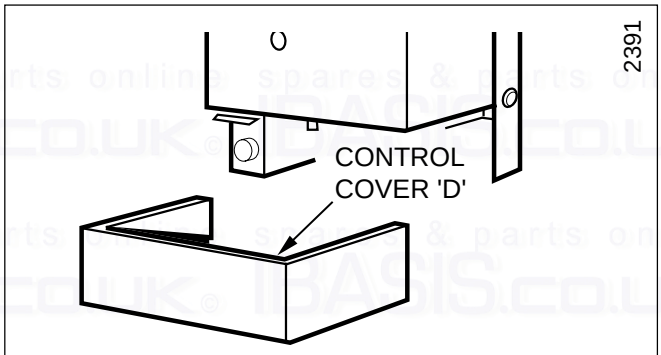

CONTROLS ACCESS Diagram 2

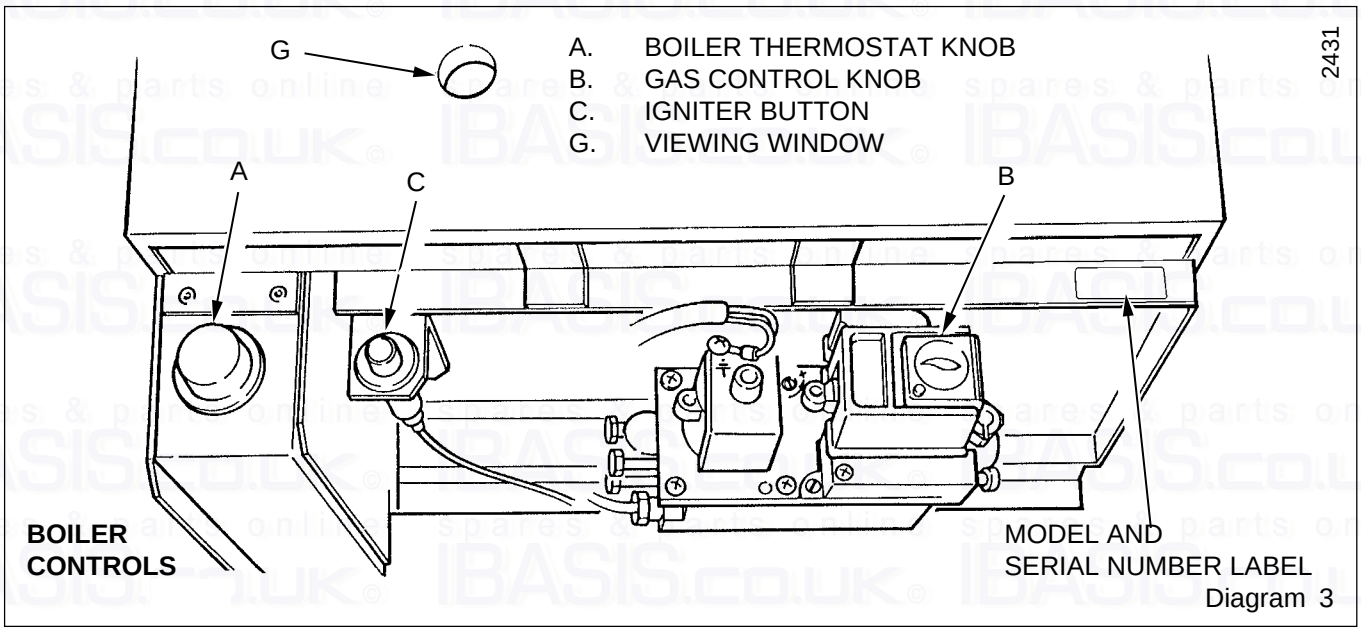

Diagram 3

1 General Data

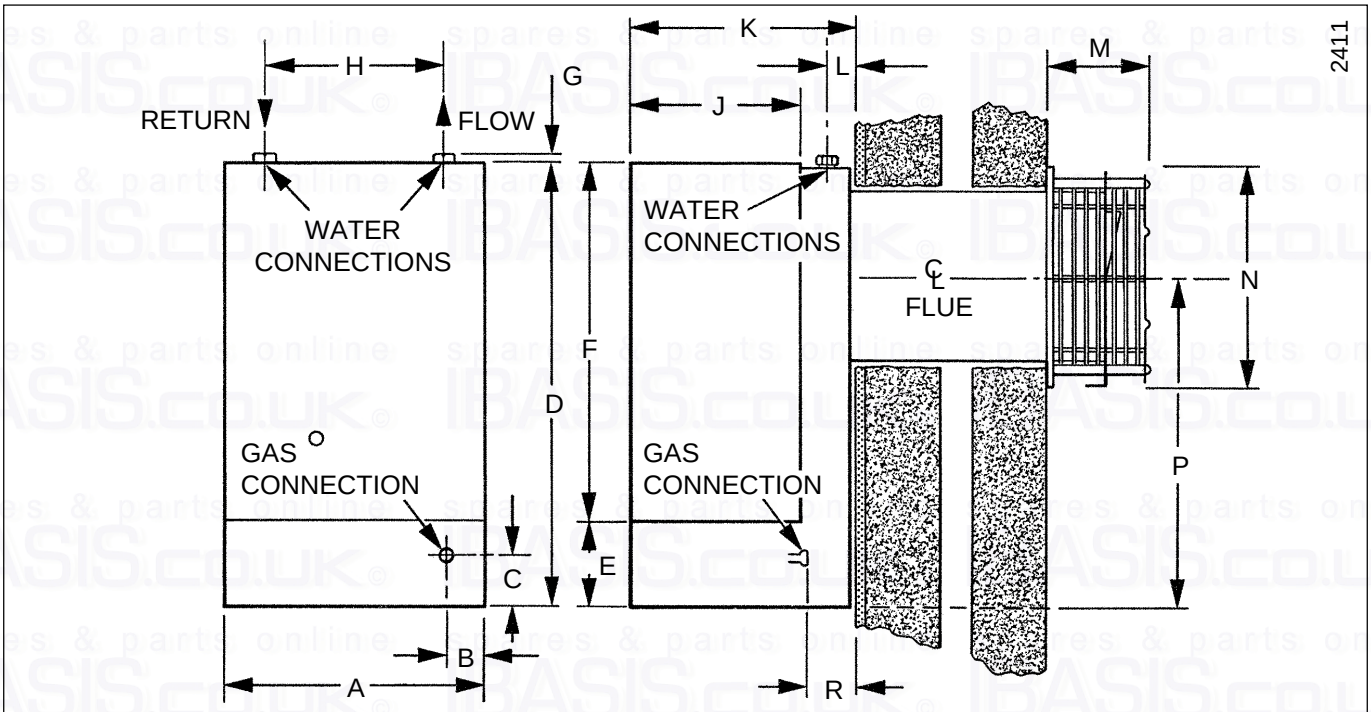

GENERAL ARRANGEMENT Diagram 1.1

Model	A	B	C	D	E	F	G	H	J	K	L	M	N	P	R
40	350	36	40	600	110	490	11	242	225	300	43	133	284	434	98

Important Notices

This boiler is for use only on G20 gas.

This boiler is suitable for fully pumped systems only.

Wherever possible, all materials, appliances and components to be used shall comply with the requirements of applicable British Standards.

Where no British Standard exists, materials and equipment should be fit for their purpose and of suitable quality and workmanship.

Sheet Metal Parts

WARNING. When installing or servicing the boiler care should be taken when handling sheet metal parts, to avoid any possibility of personal injury.

1.1 Statutory Requirements

The installation of the boiler must be carried out by a competent person in accordance with the relevant requirements of the current issue of:-

The Gas Safety (Installation and Use) Regulations, The Building Regulations, The Building Standards (Scotland) Regulations (applicable in Scotland), Local Water Company Bye-laws, The Health and Safety at Work Act, Control of Substances Hazardous to Health, The Electricity at Work Regulations and any applicable local regulations.

Detailed recommendations are contained in the current issue of the following British Standards and Codes of Practice:-

BS6798, BS5440 Part 1 and 2, BS5546 Part 1, BS5449, BS6891, BS7074 Part 1 and 2, BS7593, BS7478, BS7671.

Manufacturer's notes must not be taken in any way as overriding statutory obligations.

TABLE 1. *ECONOMY PLUS* DATA	
TOTAL WEIGHT	27.0kg (59.5lb)
WATER CONTENT	0.50litre (0.11gal)
GAS CONNECTION	Rc $^1/_2$ ($^1/_2$ in. BSPT)
WATER CONNECTION	22mm copper, **flow** at right, **return** at left
ELECTRICITY RATING	45W, internal fuse F1A
ELECTRICITY SUPPLY	240V~50Hz Fused 3A
DATA LABEL	Bottom of inner case door
INJECTOR	3.25 - Cat 30 - 1200

The Seasonal Efficiency Domestic Boilers UK (SEDBUK) is 71.9%.

The value is used in the UK Government's Standard Assessment Procedure (SAP) for energy rating of dwellings. The test data from which it has been calculated have been certified by B.S.I.

1.2 Range Rating

The boiler is range rated and may be adjusted to suit individual system requirements.

The respective Table 2 gives the ratings and settings.

1.3 B.S.I. Certification

The boiler is certificated to the current issue of British Standard 6332 Part 1, invoking the current issue of BS5258 Part 1 for performance and safety. It is, therefore, important that no alteration is made to the boiler without permission, in writing, from Hepworth Heating Ltd.

Any alteration that is not approved by Hepworth Heating Ltd., could invalidate the B.S.I. Certification, the warranty and could also infringe the current issue of the Statutory Requirements.

1.4 Gas Supply

The gas installation shall be in accordance with the current issue of BS6891.

The supply from the governed meter must be of adequate size to provide a steady inlet working pressure of 20mbar (8in wg) at the boiler.

On completion test the gas installation for soundness using the pressure drop method and a suitable leak detection fluid, purge in accordance with the above standard.

1.5 Electrical Supply

WARNING. This boiler must be earthed.

All system components shall be of an approved type and shall be connected in accordance with the current issue of BS7671 and any applicable local regulations.

Connection of the boiler and system controls to the mains supply must be through a common isolator and must be fused 3A, maximum. This method of connection should be, preferably, an unswitched shuttered socket outlet and 3 pin plug both to the current issue of BS1363.

Alternatively, a double pole isolating switch may be used, provided it has a minimum contact separation of 3mm in both poles. The isolator should be clearly marked, showing its purpose. See also Section 1.11.

Wiring to the boiler must be insulated PVC flexible type to the current issue of BS6500 Table 16 not less than 0.75mm^2 (24/0.20mm).

1.6 Contents of Packaging

The boiler is delivered in one pack.

The other pack contains the balanced flue terminal assembly and accessories.

Refer to Section 2 to check that the flue terminal assembly supplied is suitable.

1.7 Water System

The boiler may be fitted to an open vented or sealed system, see Section 3 for further details.

1.8 Draining Tap

A draining tap must be provided at the lowest points of the system which will allow the entire system, boiler and hot water cylinder to be drained off.

The boiler is provided with a drain tap for heat exchanger draining.

Draining taps shall be to the current issue of BS2879.

1.9 Safety Valve

A safety valve need not be fitted to an open vented system.

1.10 Location

This boiler is not suitable for outdoor location.

The boiler may be installed in any room, although particular attention is drawn to the requirements of the current issue of BS7671 with respect to the installation of a boiler in a room containing a bath or shower. Any electrical switch utilising mains electricity should be so situated that it cannot be touched by a person using the bath or shower. The electrical provisions of the Building Standards (Scotland) Regulations are applicable to such installations in Scotland.

The boiler must be mounted on a flat wall which is sufficiently robust to take its weight.

1.11 Boiler Location

Refer to diagram 1, Instructions for Use.

The boiler must be positioned so that at least the minimum operational and servicing clearances are provided.

Additional clearances may be required for installation.

If fixtures are positioned next to the boiler they should be made removable for access to pipework.

1.12 Heating System Controls

The heating system should have installed: a programmer and room thermostat controlling the boiler.

Thermostatic radiator valves may be installed in addition to the room thermostat.

Note: For further information, see The Building Regulations 1991 - Conservation of fuel and power, 1995 edition - Appendix G, table 4b.

TABLE 2.

RANGE RATING		*Min.*	*Med.*	*Max.*
NOMINAL HEAT INPUT (GROSS)	*kW*	10.99	-	14.65
	Btu/h	37,500	-	50,000
NOMINAL HEAT OUTPUT	*kW*	8.79	10.26	11.72
	Btu/h	30,000	35,000	40,000
BURNER SETTING PRESSURE	*m bar*	6.1	8.5	11.0
	in. w.g.	2.4	3.4	4.4

2 Flue and Ventilation

2.1 Terminal Position

The minimum acceptable spacings from the terminal to obstructions and ventilation openings are as shown in diagram 2.1.

Where the terminal is fitted within 850mm (34in) below plastic guttering or within 450mm (18in) of painted eaves or painted gutters an aluminium shield 750mm (2ft6in) long should be fitted to the underside and immediately beneath the guttering/ eaves.

2.2 Terminal Protection

A terminal guard is required if persons could come into contact with the terminal or the terminal could be subject to damage.

If a guard is required, it must be positioned to provide a minimum of 50mm clearance from any part of the terminal and be central over the terminal.

A suitable guard can be obtained from,

The Tower Flue Components Ltd.,
Morley Road,
Tonbridge,
Kent,
TN9 1RA

reference “A” black,

2.3 Wall thickness

Check the wall thickness.

The standard flue set supplied is suitable for wall thickness 238mm to 330mm.

For other wall thicknesses, kits are available.

76 to 238mm - Kit 443237
324 to 580mm - Kit 443238

2.4 Boilers in a Compartment

Where the installation of the boiler will be in an unusual location, special procedures are necessary, the current issue of BS6798 gives detailed guidance.

A compartment used to enclose the boiler must be designed and constructed specifically for this purpose. An existing cupboard or compartment modified for the purpose may be used. Details of essential features of cupboard or compartment design are given in the current issue of BS6798.

The doorway opening must be of sufficient size to allow for easy removal of the boiler.

Where the boiler is fitted in a cupboard or compartment, permanent high and low level ventilation must be provided. The minimum ventilation areas required are given in the respective Table 5.

2.5 Timber Frame Buildings

If the boiler is to be installed in a timber frame building it should be fitted in accordance with the Institute of Gas Engineers document IGE/UP/7/1998. If in doubt seek advice from the local gas undertaking or Hepworth Heating Ltd.

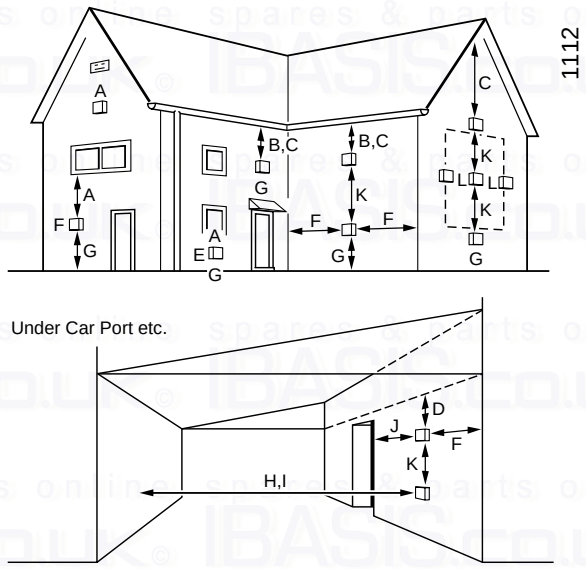

	MINIMUM SITING DIMENSIONS FOR BALANCED FLUE TERMINALs POSITION	MINIMUM SPACING
		mm
A	DIRECTLY BELOW AN OPENABLE WINDOW, AIR VENT, OR ANY OTHER VENTILATION OPENING	300
B	BELOW GUTTER, DRAIN/SOIL PIPE	300
C	BELOW EAVES	300
D	BELOW A BALCONY OR CAR PORT	600
E	FROM VERTICAL DRAIN PIPES AND SOIL PIPES	75
F	FROM INTERNAL OR EXTERNAL CORNERS	600
G	ABOVE ADJACENT GROUND OR BALCONY LEVEL	300
H	FROM A SURFACE FACING THE TERMINAL	600
I	FACING TERMINALS	600
J	FROM OPENING (DOOR/WINDOW) IN CAR PORT INTO DWELLING	1200
K	VERTICAL FROM A TERMINAL	1500
L	HORIZONTALLY FROM A TERMINAL	300

Diagram 2.1

TABLE 5. COMPARTMENT AIR VENTS

VENTILATION REQUIREMENTS	HIGH LEVEL VENT AREA		LOW LEVEL VENT AREA	
	cm^2	in^2	cm^2	in^2
VENTILATION FROM ROOF OR SPACE	132	20	132	20
VENTILATION FROM OUTSIDE	66	10	66	10

Notes:

PUMP

The pump should be fitted in the flow pipework from the boiler, with valves each side, integral if possible, it should produce a temperature difference across the boiler of 11°C (20°F).

Flow rates should be,

15.3 Litre/min (3.4gal/min)

See diagram 3.1 for pressure loss across the boiler.

High resistance microbore systems may require a higher duty pump.

BYPASS

The flow through the boiler must not be allowed to fall below, 10.5 Litre/min (2.3gal/min) whilst the burner is alight.
A bypass must be fitted.

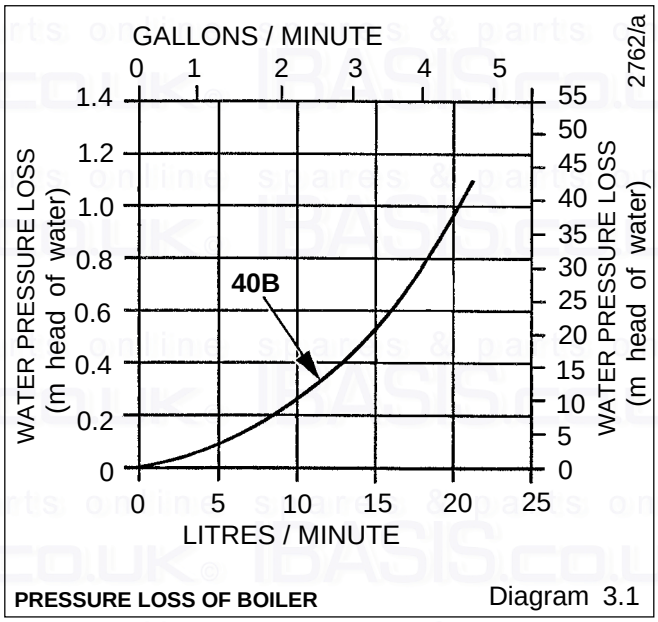

PRESSURE LOSS OF BOILER Diagram 3.1

3.1 Open Vented Systems

Water system

For an open vented system the boiler must be supplied from an unrestricted water supply taken from a feed and expansion tank, situated at a maximum height of 27.5metres (90ft) above the boiler.

The cold feed supply must be 15mm minimum size.

It is important that the relative positions of the pump, cold feed and open vent are as shown in diagram 3.2.

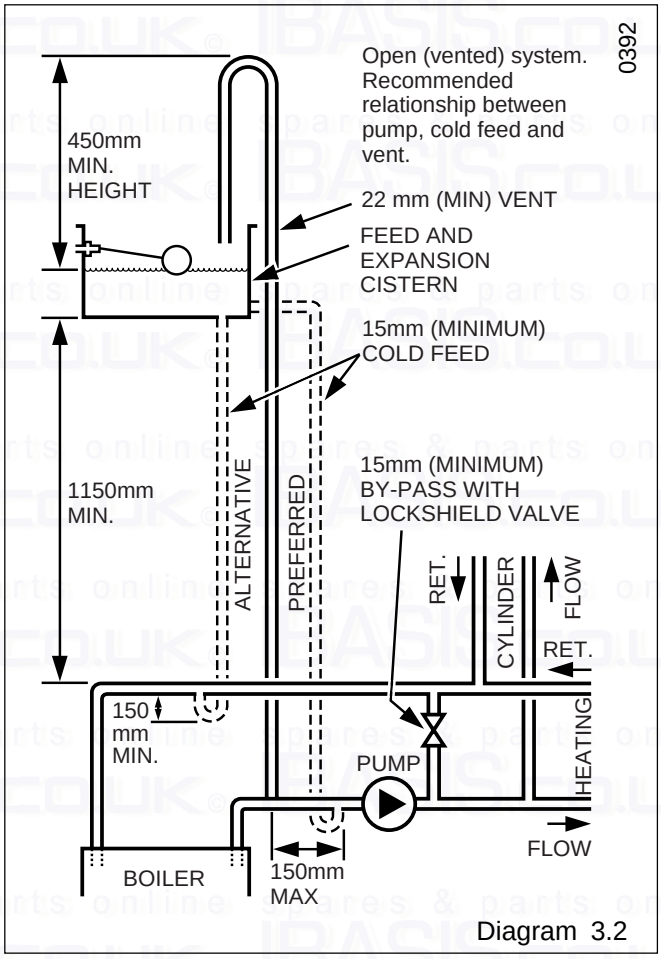

Diagram 3.2

3.2 Cylinder

SINGLE FEED SELF PRIMING CYLINDERS ARE NOT RECOMMENDED.

The hot water cylinder must be a double feed fully indirect type.

3.3 Inhibitor

Attention is drawn to the current issue of BS5449 and BS7593 on the use of inhibitors in central heating systems.

If an inhibitor is to be used, contact a manufacturer for their recommendations for the best product to use.

When fitting the boiler into an existing system take special care to drain the entire system including the radiators, then thoroughly cleaning out before fitting the boiler whether or not adding an inhibitor.

Sealed Water Systems

The installation should comply with the appropriate requirements of the current issue of BS4814, BS5449 BS6759 BS6798 and BS7074 Part 1 and 2.

See diagram 3.3 for a suggested layout.

3.4 Safety Valve

A safety valve must be fitted to a sealed water system.

It shall be preset, nonadjustable with a lift pressure of 3bar, incorporating seating of a resilient material, a test device and a connection for drain.

The drain from the safety valve must be routed clear of any electrical fittings and positioned so that any discharge can be seen.

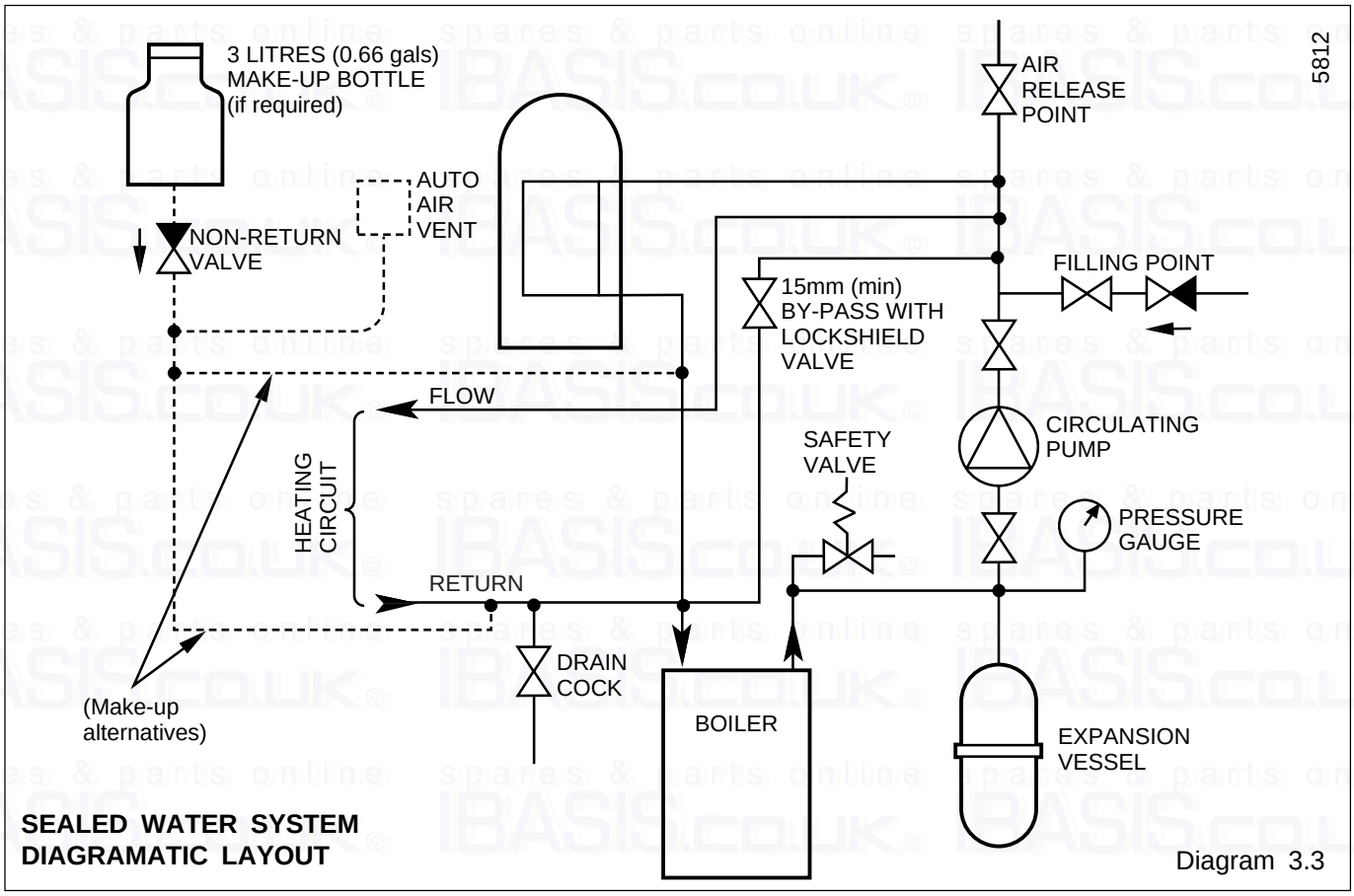

3.5 Expansion Vessel

A diaphragm type expansion vessel, conforming to the current issue of BS4814 (see also the current issue of BS7074 Part 1 and 2) must be connected at a point close to the inlet side of the circulating pump, see diagram 3.3, unless laid down differently by the manufacturer.

The expansion vessel volume depends on the total water system volume and the initial system design pressure. For any system an accurate calculation of the vessel size is given in the current issue of BS7074 Part 1.

Example, for an initial system design pressure of 0.7bar, the minimum total vessel volume required is 0.063xTotal System volume.

Note, a higher initial design pressure requires a larger volume expansion vessel.

Guidance on vessel sizing is also given in the current issue of BS5449 and BS7074 Part 1.

The charge pressure must not be less than the static head of the system, that is, the height of the highest point of the system above the expansion vessel.

The water content of the boiler is given in the Data Table 1.

3.6 Pressure Gauge

A pressure gauge with set pointer and covering at least the range 0 to 4bar (0 to 60lb/in^2) shall be permanently fitted to the system in a position where it can be seen when carrying out the filling operation.

3 Water Systems

3.7 Cylinder

SINGLE FEED INDIRECT CYLINDERS ARE NOT SUITABLE.

The hot water cylinder must be of the indirect coil type. It must be suitable for working at a gauge pressure of 0.35bar above the safety valve setting.

3.8 Water Make Up

Provision must be made for replacing water lost from the system. A make up vessel mounted above the highest point of the system and connected through a non-return valve to the system on the return side of either the hot water cylinder or system.

Alternatively, provision for make up can be made by using a filling loop.

3.9 Filling Sealed Water Systems

Provision for filling the system at a low level must be made. Three methods of filling are shown in diagram 3.4. There must be no permanent connection to the mains water supply, even through a non-return valve.

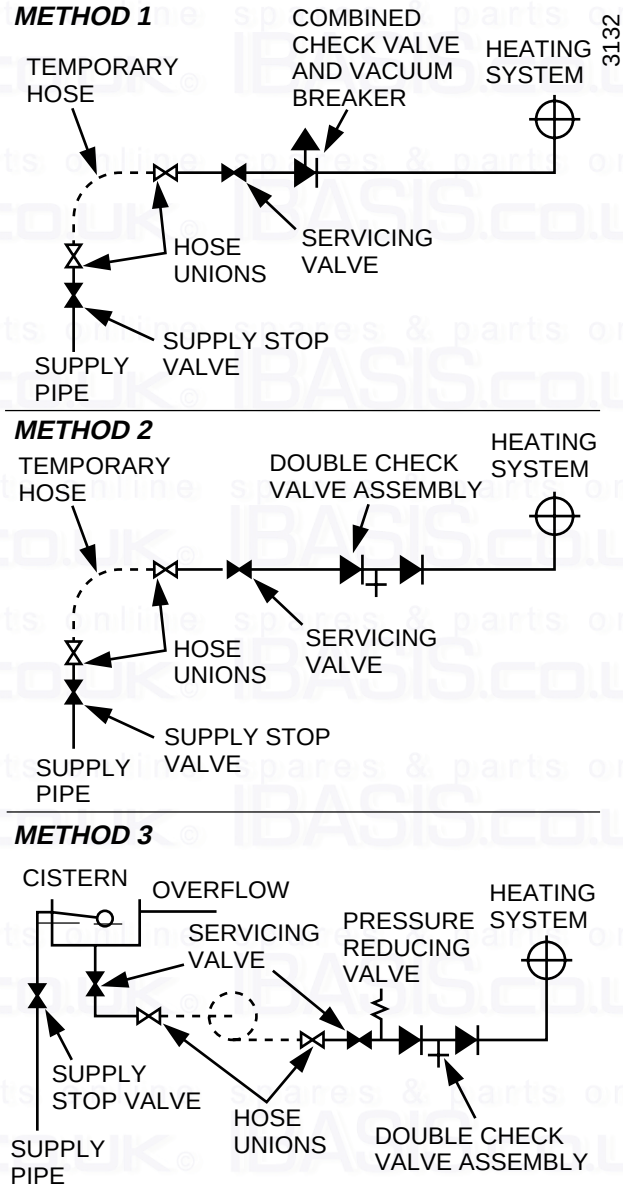

FILLING SEALED WATER SYSTEMS Diagram 3.4

4 Flue and Appliance Preparation

4.1 Positioning

Place the template, provided, on the wall in the required position and mark location of the balanced flue hole, see diagram 2.1.

Cut the hole in the wall to accept the wall liner, see diagram 4.1.

Make good any plasterwork at this stage. When dry, select the liner "G", see diagram 4.2. Push into the hole until the flange is flush with the internal wall. Fit the liner "B" from inside so that it is flush with the outside brickwork. Mark the two liner positions and remove. Align the marks on the liners and tape them together with the tape provided.

The wall liner "B" is not required for wall thickness less than length of duct "G" on the short flue set. For lesser wall thickness than duct "G" cut the plain end to the required length.

Reposition the template on the wall in line with the wall opening, or see diagram 4.1.

Mark positions for the three fixing screws.

Drill and plug the fixing holes, suitable for No.10x50mm wood screws and plugs.

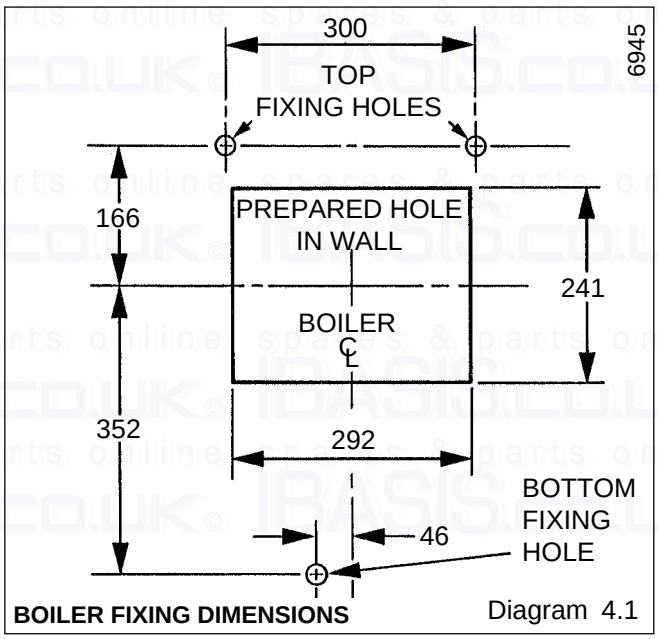

BOILER FIXING DIMENSIONS Diagram 4.1

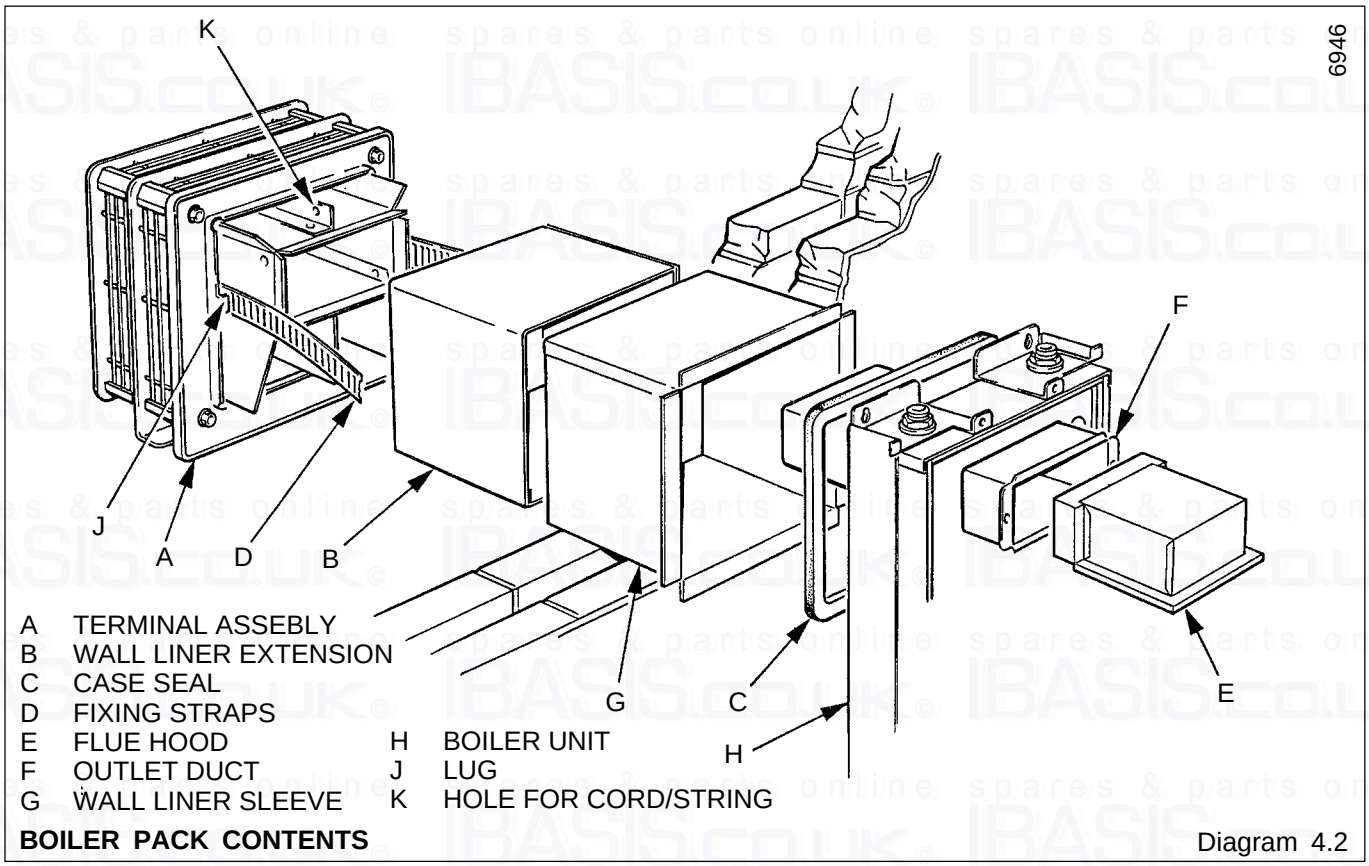

BOILER PACK CONTENTS Diagram 4.2

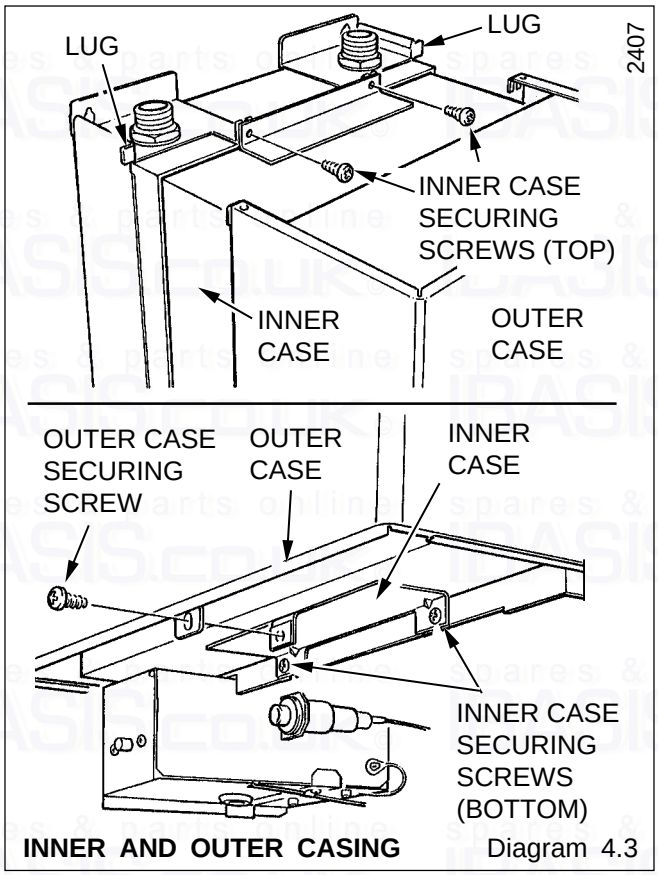

INNER AND OUTER CASING Diagram 4.3

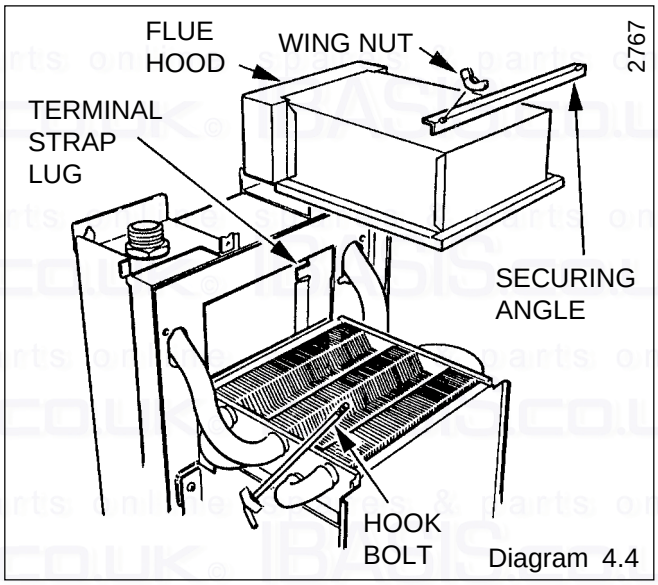

Diagram 4.4

4.2 Appliance Preparation

Remove the controls cover by pulling it forwards and off.

Remove the outer case by undoing the screw at the bottom and unhooking at the top.

Remove the inner case by undoing the screws at the top and bottom, see diagram 4.3.

Remove the flue hood by releasing the wing nuts and remove angle, see diagram 4.4. Lift off flue hood. Remove the two flue duct screws.

Fit sponge seal “C” around the spigot at the back of the boiler, adhesive face to the back of the case “H”, see diagram 4.2.

Take the side strips from packaging and hook them over the top edge of the side panel and secure with a screw at the bottom.

5.1 External Access Procedure

Fit the slotted straps “D” to the terminal “A” by placing over the lugs and then bending the lugs to secure, see diagram 4.2.

From the inside fit the wall liner assembly “B” and “G” into the hole.

Fit the top two fixing screws, allow them to stand proud to accept the keyhole fixing slots on the boiler.

Mount the boiler and tighten the top screws and fit bottom screw.

Locate and support the terminal, note, TOP is marked, see diagram 4.2.

An alternative method of support is to attach a length of cord or string, to the terminal through the small hole in the top centre of the baffle, see diagram 4.2. Attach a suitable weight to the free end of the cord etc. Pass the weight and cord through the hole in the wall.

Working from the inside, attach the straps to the lugs on the boiler, see diagram 4.4, bend the lugs and cut off excess strap length.

Push the flue duct “F” into the terminal with the unflanged end against the terminal. Ensure that the lower flange duct “F” fits behind the combustion chamber rear panel. For walls less than 230mm thick cut to required length at the plain end of the duct.

Refit the two screws through the duct flange, but do not over tighten.

Replace flue hood, securing angle, tie rods and wing nuts.

Refit the inner cover and secure with the screws previously removed.

5.2 Internal Access Procedure

If required the terminal can be installed from inside the premises.

Fit the slotted straps “D” to the terminal “A” by placing over the lugs and then bending the lugs to secure, see diagram 4.2.

Fit the top two fixing screws, allow them to stand proud to accept the keyhole fixing slots on the boiler.

Attach a length of cord to the terminal through the small hole provided in the top centre of the baffle.

Fit the liner assembly “B” and “G” into the hole through the wall.

Pass the terminal through the wall liner assembly, using the cord with a suitable weight attached to hold the terminal in position. NOTE, the terminal TOP is indicated and the flange on the wall plate is located inside the wall liner assembly.

Hook the appliance onto the screws passing the string and weight through the air duct in the back of the appliance.

Tighten the two upper screws and fit the bottom screw.

Attach the two slotted straps from the terminal to the two lugs on the appliance, see diagram, bend lugs to secure. Cut off excess strap length and remove cord.

Push the flue duct “F” into the terminal with the unflanged end against the terminal. Ensure that the lower flange duct “F” fits behind the combustion chamber rear panel. For walls less than 230mm thick cut to required length at the plain end of the duct.

Refit the two screws through the duct flange, but do not over tighten.

Replace the flue hood, securing angle, tie rods and wing nuts.

Refit the inner cover and secure with the screws previously removed.

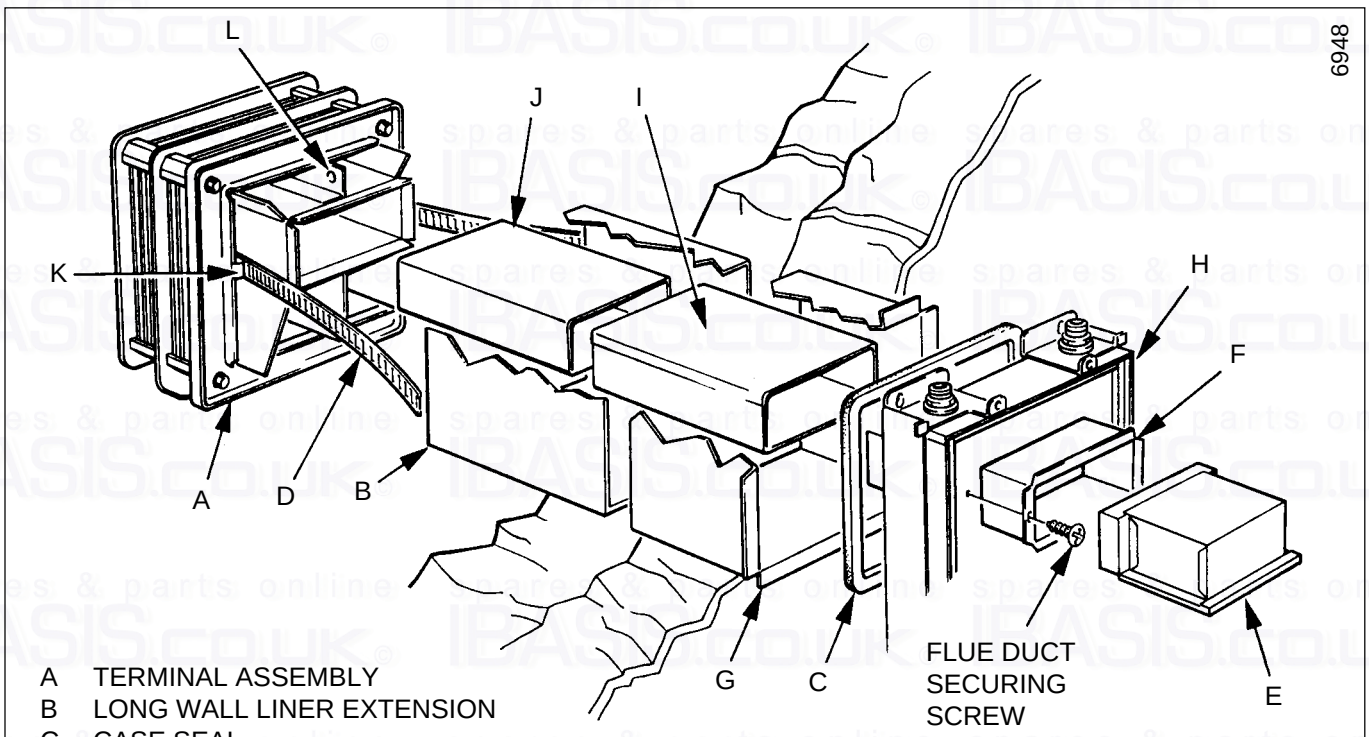

A	TERMINAL ASSEMBLY		
B	LONG WALL LINER EXTENSION		
C	CASE SEAL		
D	LONG FIXING STRAP	H	BOILER UNIT
E	FLUE HOOD	I	LONG FLUE DUCT SLEEVE
F	FLUE DUCT	J	LONG FLUE DUCT EXTENSION
G	LONG WALL LINER SLEEVE	L	HOLE FOR CORD/STRING

LONG FLUE Diagram 5.1

5 Boiler Installation

5.3 Installing the Long Flue Set

Refer to diagram 5.1.

The flue duct “F”, flue duct extension “K” and flue duct sleeve “J” need to be assembled together to suit wall thickness.

This assembly is 75mm longer than the wall liner assembly “B” and “G” already prepared, with a minimum overlap of 40mm at each joint. Use the tape provided to make a permanent assembly of these parts.

Push the flue duct assembly into the terminal, with the unflanged end entering the terminal. Ensure that the lower flange duct “F” fits behind the rear panel of the combustion chamber.

Refit the two screws through the duct flange, but do not over tighten.

Replace the flue hood, securing angle, tie rods and wing nuts, do not over tighten.

Refit the inner cover and secure it with the screws previously removed.

6 Gas and Water Connection

Connect the gas supply to the Rc$^1/_2$ gas cock.

The whole of the gas installation, including the meter, should be inspected, tested for soundness and purge in accordance with the current issue of BS6891.

Connect the water to the boiler using the nuts and olives supplied, to BS2871 copper tube.

7 Electrical Wiring

Warning. The boiler must be earthed and have a permanent mains supply.

7.1 Electrical Connection

To remove the control box release the two screws at the front, see diagram 7.1 and lower the box until it is clear then push it backward to disengage the hinge at the rear, see diagram 7.1. Take care not to damage the thermostat and capillaries.

Thread the mains lead through the clamp in the rear of the control box cover and connect to the terminal strip.

When making connections, ensure that the earth conductor is made longer than the others so that it is the last to become disconnected.

7.2 Pump and External Controls Connections

The pump must be wired into the boiler control box as shown in diagram 7.2.

Any external controls must only be wired to interrupt the red link between terminals 9 and SL.

Take the strain relief grommets from the loose items pack. Place around the external controls and pump connection cables respectively squeeze the sides of the grommets when pushing them into the obround holes in the rear of the control box, see diagram 7.1.

Make sure the supply cable and all external cables are secured.

7.3 Testing

In the event of an electrical fault after installation preliminary system checks must be carried out, that is, earth continuity, polarity and resistance to earth, using a suitable multimeter.

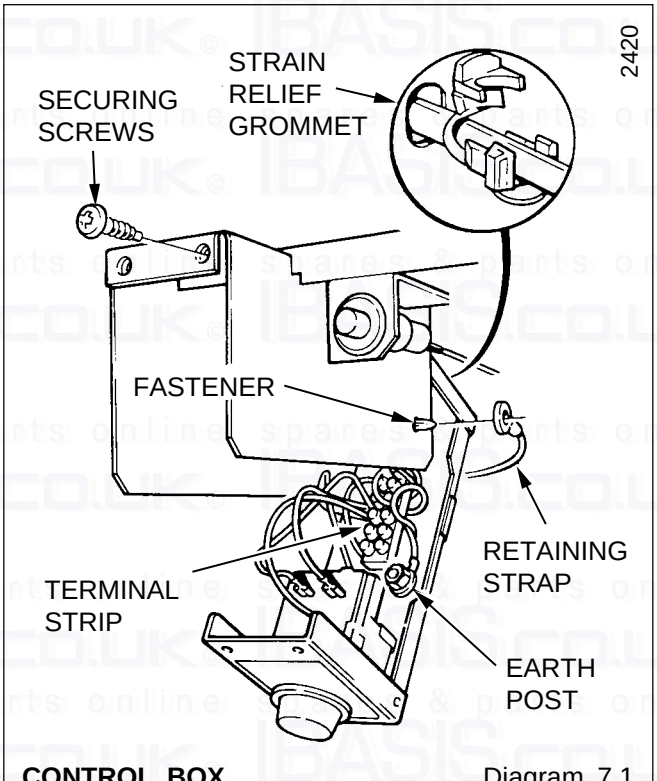

CONTROL BOX Diagram 7.1

7 Electrical Wiring

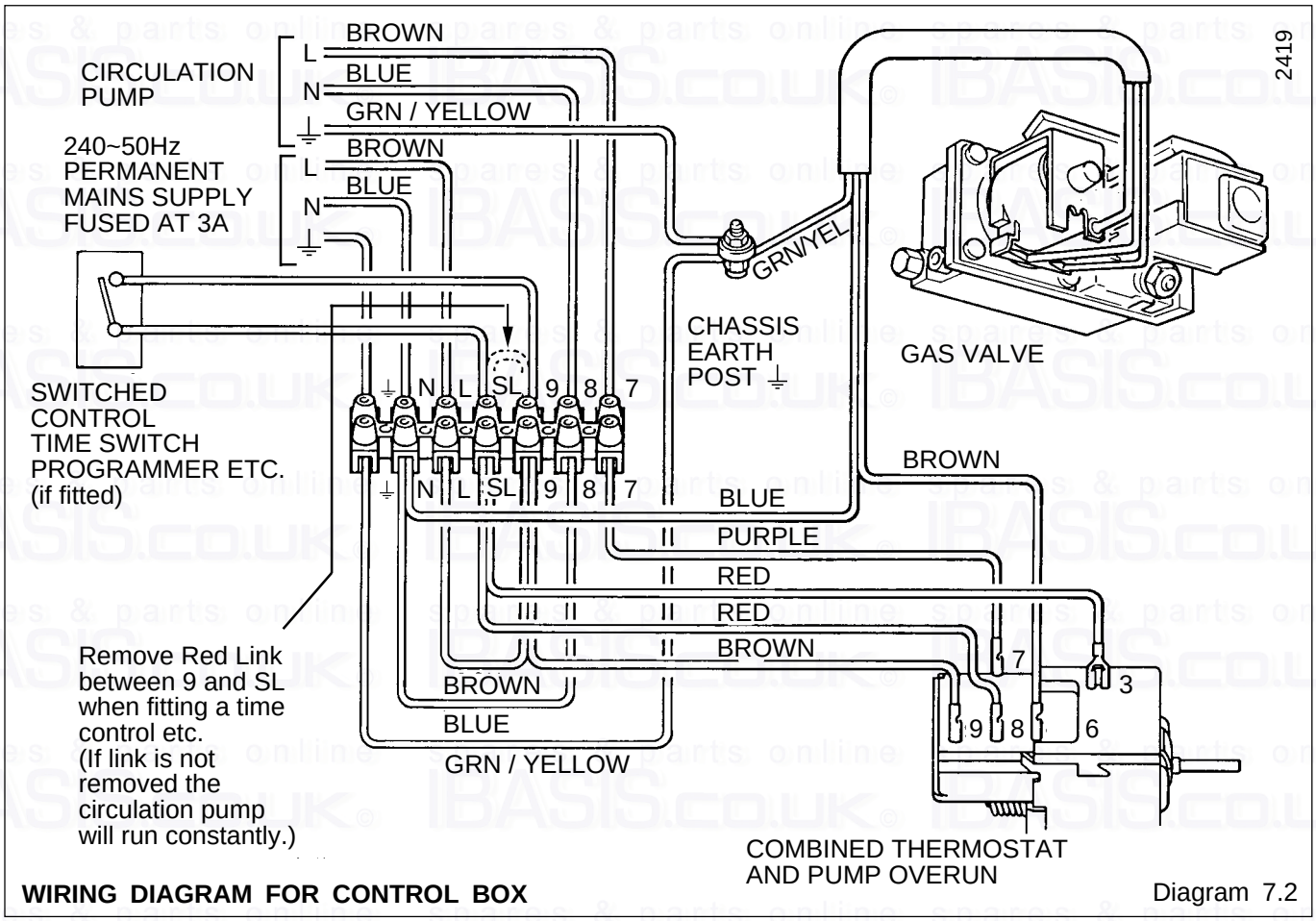

WIRING DIAGRAM FOR CONTROL BOX Diagram 7.2

8 Commissioning

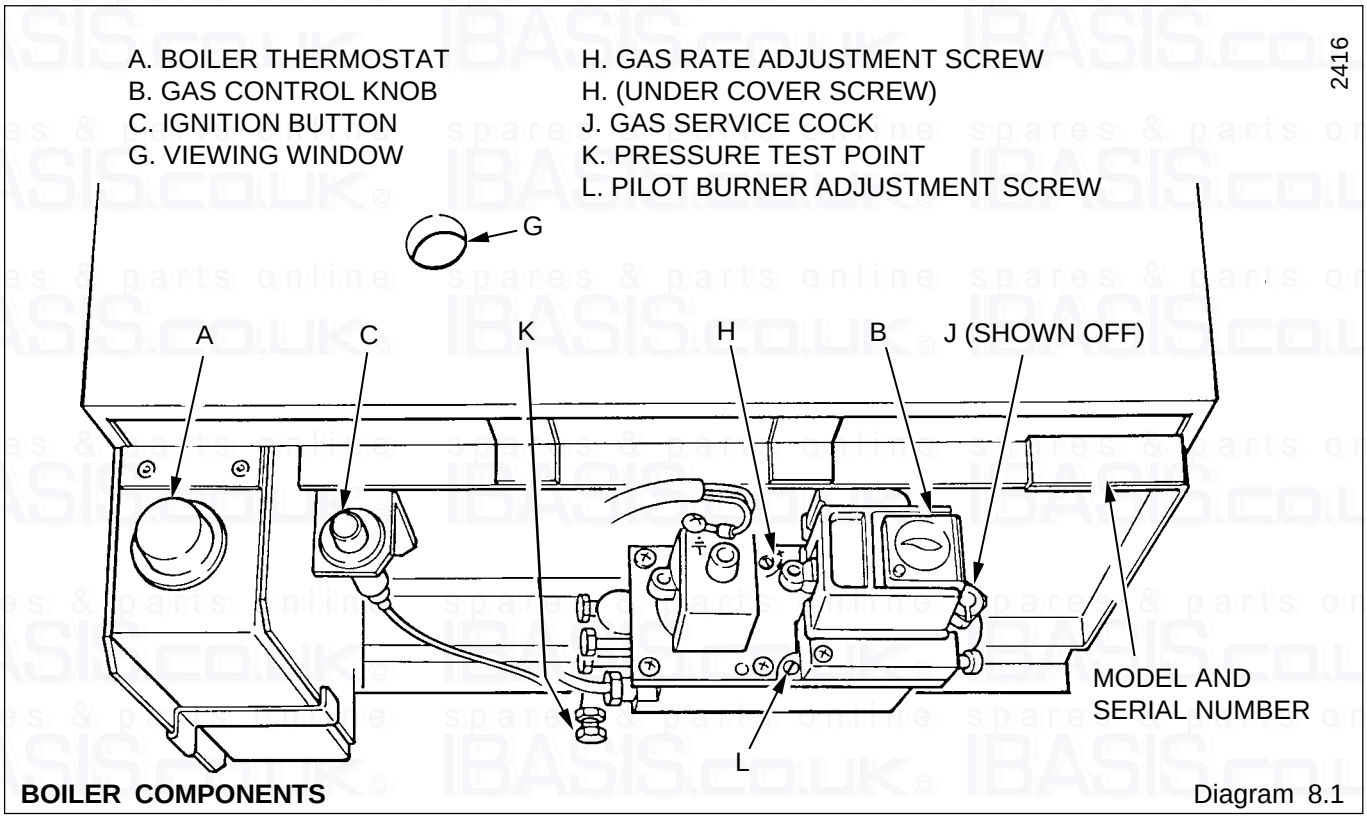

BOILER COMPONENTS Diagram 8.1

8 Commissioning

8.1 All Systems

Make sure that the system has been thoroughly flushed out with water without the pump in place. Refit the pump, fill the system with water, making sure that all the air is properly vented from the system and pump.

Before operating the boiler check that all external controls are calling for heat.

8.2 Sealed Water Systems Only

Flush the whole system with cold water without the pump in place. Refit the pump and fill until the pressure gauge registers 1.5bar (21.5lbf/in^2). Clear any air locks and check for water soundness.

Check the operation of the safety valve, by allowing the water pressure to rise until the valve opens. The valve should open within +/-0.3bar (+/-4.3lbf/in^2). of the preset pressure. Where this is not possible, conduct a manual check and test.

Release cold water to initial system design pressure.

The set pointer on the pressure gauge should be set to coincide with the indicating pointer.

8.3 Initial Lighting and Testing

Refit the outer case, see diagram 4.5.

Identify the controls by reference to diagram 8.1.

Turn the boiler thermostat to “O” the off position.

Remove the gas pressure test point screw “K” and fit a suitable pressure gauge.

Turn the electrical supply on and check that the pump is circulating water through the system.

OPEN ALL WINDOWS AND EXTINGUISH ANY NAKED LIGHTS, PIPES, CIGARETTES etc.

Turn on the main gas supply and purge in accordance with the current issue of BS6891.

Turn boiler gas service cock “J” to “On”.

Depress control button “B”, keep pressed in and at the same time operate the piezo unit button “C” until the pilot burner lights. After the pilot burner lights keep the button “B” depressed for about 15 seconds. If the pilot burner fails to stay alight a safety device prevents immediate relighting. Do not attempt to relight until the safety device has reset. Check the length of the pilot flame, it should envelop the thermocouple tip as shown in diagram 10.3. The pilot rate can be adjusted by turning screw “L” having first removed the gas valve cover, see diagram 8.1.

Test pilot supply connections for gas soundness with a suitable leak detection fluid.

Fit the outer case, secure with the screws previously removed.

Make sure that the pilot is alight and stable, view through windows “G”.

Set the boiler thermostat knob “A” between “1” and “5” and check that the burner lights smoothly. Check the gas connections for gas soundness with a suitable leak detection fluid.

To set the burner pressure operate the boiler for 10 minutes, remove the gas valve cover, if not already removed, adjust the gas pressure by screw “H” until the required pressure is obtained, see relevant Table 2 for setting pressures.

Align and attach the self adhesive arrow, from the loose items pack, in the appropriate space beneath the “MIN” and “MAX” column on the Data label.

Should any doubt exist about the gas rate this should be checked at the meter, using a stop watch to time at least one cubic foot of gas consumption.

Remove the pressure gauge and refit the test point screw, making sure that a gas tight seal is made.

Replace gas valve cover.

8.4 Testing

Check the operation of the flame failure device on the boiler by turning the gas service cock off, to make sure that the gas valve shuts down within 60 seconds, indicated by a “click” from the valve.

8.5 Flushing

Allow the system to reach maximum working temperature and examine for water leaks.

The system should then be turned off and drained rapidly whilst hot.

Refill the system and vent all air as before and again checking for water leaks.

8.6 Adjustment - All Systems

When commissioning the system the boiler should first be fired with the bypass fully closed on full service, that is, central heating and domestic hot water. The system should then be balanced, adjusting the pump and lockshield valve as necessary. Having achieved a satisfactory condition operate the boiler with the bypass valve fully closed on minimum load, normally this will be central heating only with one radiator in the main living area operating. The valve should be gradually opened to achieve a flow rate of 7.8 litre/min (1.7gal/min) 30, 10.5 litre/min (2.3gal/min)40, and 13.2 litre/min (2.9gal/min) 50.

UNDER NO CIRCUMSTANCES SHOULD THIS VALVE BE LEFT IN THE FULLY CLOSED POSITION.

Operate the boiler again on full service and check the balancing, making further adjustments as necessary.

If thermostatic radiator valves are fitted care must be taken to ensure an adequate flow rate when the valves close, refer to the current issue of BS7478 for guidance.

Refit the controls cover.

8.7 Sealed Water Systems

Sealed water systems should be adjusted to the initial design pressure and the set pointer repositioned.

9 Instruct User in Correct Operation of the Boiler

Hand the Instructions for Use to the user for their retention.

Instruct and demonstrate the safe and efficient operation of the boiler, heating system and domestic hot water system.

Advise the user, that to ensure the continued efficient and safe operation of the boiler it is recommended that it is checked and serviced at regular intervals. The frequency of servicing will depend upon the particular installation conditions and usage, but in general once a year should be enough.

It is the Law that any servicing is carried out by a competent person.

Draw attention, if applicable, to the current issue of the Gas Safety (Installation and Use) Regulations, Section 35, which imposes a duty of care on all persons who let out any property containing a gas appliance.

Reminder, leave these instructions with the user.

Advise the user that the 'Benchmark' logbook should be completed by the installation engineer on completion of commissioning or servicing.

10 Servicing and Replacement of Parts

Servicing and replacement of parts must be carried out by a competent person.

Before commencing a service or replacing parts isolate the gas and electrical supplies.

Replacement of parts is in the reverse order to removal unless stated otherwise.

10.1 Heating Body - Service

Remove the controls cover by pulling it forward and off.

Remove the outer casing by releasing the screw at the bottom and unhooking at the top.

Remove the inner case by releasing screws at the top and bottom, see diagram 4.5.

To remove the flue hood, release wing nuts and lift off securing angle and flue hood, see diagram 10.1.

Remove the combustion chamber front panel by undoing the wing nut at the bottom front and the four screws securing it to the combustion chamber sides, see diagram 10.1.

Remove the two screws and washers securing the pilot burner and shield to the main burner, see diagram 10.2.

Pull the pilot assembly forward enough to allow the main burner to be freed from the injector. Raise the burner up at the front, withdraw forward. Take care not to damage the insulation and the pilot burner and electrode assemblies.

Place a sheet of paper in the combustion chamber and brush away any deposits.

Remove the paper and debris.

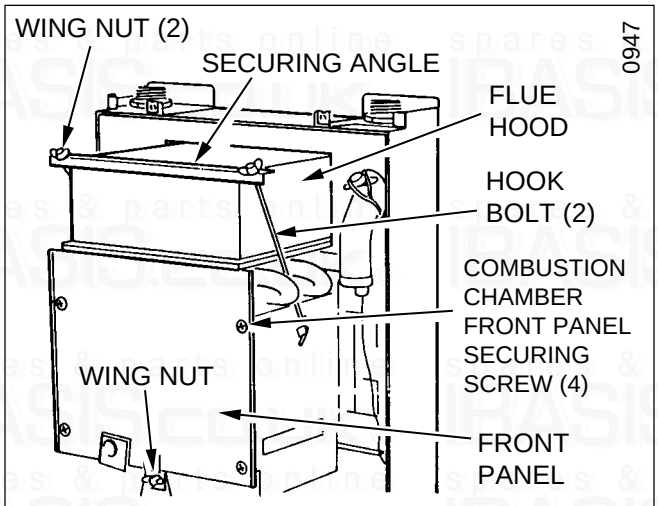

Casing not illustrated for clarity

ACCESS for SERVICING Diagram 10.1

10.2 Main Burner - Service

Generally follow the instruction in "Heating Body - Servicing".

With the main burner removed the injector can be unscrewed and replaced as necessary, using a new sealing washer.

If cleaning do not use a wire or sharp instrument on the hole.

When replacing the main burner make sure that it is pushed fully home onto the injector and that the guides are engaged on the injector manifold.

10.3 Pilot Burner and Injector

Generally follow the instruction in "Heating Body - Servicing".

With the main case and controls cover etc., removed as above, pull off ignition lead from the electrode.

Unscrew the tubing nut at the base of the pilot burner, releasing the pilot pipe. Remove the pilot injector by unscrewing from the pilot burner, see diagram 10.1.

Release the wing nuts securing the flue hood, see diagram 10.1.

Remove the combustion chamber front panel as above.

Remove the two screws and washers securing the pilot burner and pilot shield to the main burner, see diagram 10.2.

Remove the pilot shield complete with electrode.

Unscrew the thermocouple nut.

The pilot burner can be lifted away.

Take care not to damage the electrode.

When replacing make sure that the spark gap is as shown in diagram 10.3.

10.4 Thermocouple

Generally follow the instructions in "Heating Body - Servicing".

Release, but do not remove, the two screws securing the front and rear gland plates. Pull the front gland plate forward, see diagram 10.4. Disconnect the thermocouple at the gas valve and remove.

Use the old thermocouple as a pattern when fitting the new one. Do not tighten the nut at the gas valve more than a quarter turn beyond finger tight.

Check the electrode spark gap, see diagram 10.3.

10.5 Electrode

Generally follow the information under Section 10.3.

Unscrew the electrode from the pilot shield.

When refitting check that the gap is as in diagram 10.3.

10.6 Over Heat Cutoff

Generally follow the information under Section 10.3.

Remove the two screws securing the over heat cutoff to the clamp, see diagram 10.5.

Release connections at the gas valve, see diagram 10.6.

Release but do not remove the two screws securing the front and rear gland plates, see diagram 10.4 and withdraw the cutoff leads.

When refitting smear a little of the heat sink compound, supplied, between the face of the cutoff and the water pipe, ensure that it is correctly located on the pipe.

10.7 Gas Valve

See diagram 10.6.

Gain access as under Section 10.3.

Remove screw to release gas valve cover.

Disconnect all leads and pipes at the valve.

Undo the four screws each side of the valve to release the service cock and burner supply tube, take care not to damage to “O” rings.

Re-assembly note, when refitting the gas valve take care not to damage the “O” rings.

Remake all connections.

Do not tighten the thermocouple nut more than a quarter turn beyond finger tight.

It will be necessary to purge the pipework and valve before relighting - refer to Commissioning.

10.8 Electrical Control Box

Remove controls cover and outer casing as Section 10.1.

Remove retaining clip from the boiler thermostat phial pocket and withdraw the phial, see diagram 10.5.

Remove the control box by undoing the two fixing screws at the front and lower the front of the box until it is clear of the cover. Push the box towards the rear of the boiler to disengage the hinge and lower, see diagram 7.1.

Release, but do not remove, the two screws securing the front and rear gland plates. Pull the gland plates forwards, see diagram 10.4.

Withdraw the thermostat capillary through the bottom of the air duct.

Disconnect cables (a) mains, L.N.E. (b) pump at terminal 8, 7 and earth stud, (c) cables at gas valve, (d) disconnect any remote controls at terminal 9 and SL.

When replacing refer to diagram 7.2 for electrical connections. Smear the thermostat phial with heat sink compound and ensure it is secured, with the retainer, in the pocket.

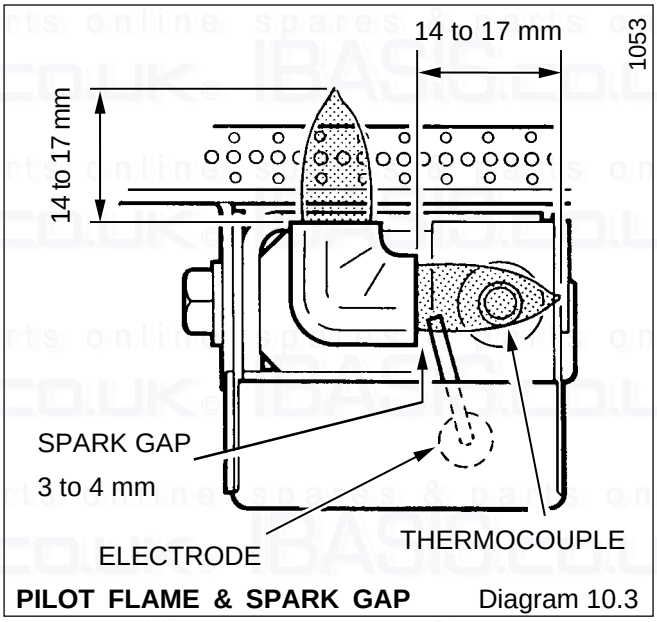

PILOT FLAME & SPARK GAP Diagram 10.3

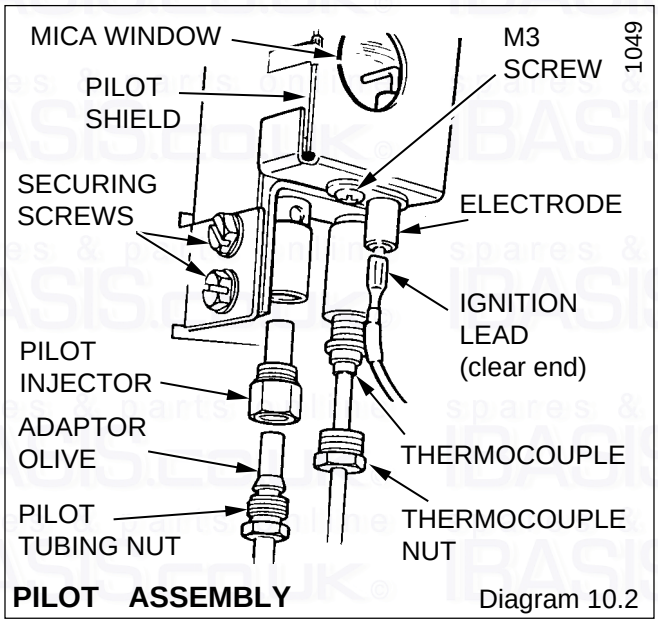

PILOT ASSEMBLY Diagram 10.2

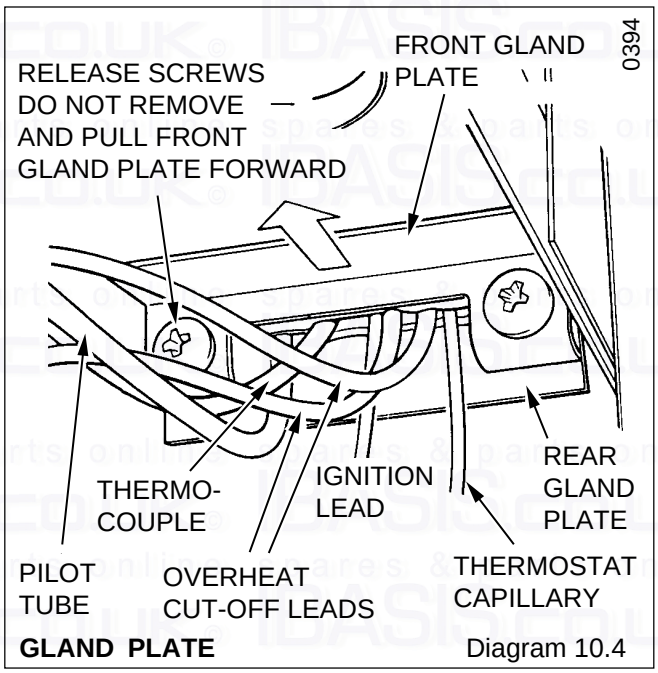

GLAND PLATE Diagram 10.4

10.9 Piezo Unit

Gain access as in Section 10.3.

Disconnect the ignition lead and remove backing nut from the piezo unit.

10.10 Ignition Lead

Remove controls cover and outer casing as above.

Release, but do not remove, the two screws securing the front and rear gland plates. Pull the gland plates forwards, see diagram 10.4.

Remove the ignition lead, when replacing ensure that the clear end is fitted to the electrode.

10.11 Thermostat

Gain access as Section 10.3.

Remove and support the control box as Section 10.9.

Remove the control knob and electrical connections from the thermostat body.

Release, but do not remove, the two screws securing the front and rear gland plates. Pull the gland plates forward, see diagram 10.4.

Remove the two screws securing the thermostat to the control box. The thermostat may now be removed withdrawing the capillary through the bottom of the air duct.

When replacing smear the thermostat phial with the heat sink compound supplied, before replacing and securing with the retainer in the pocket.

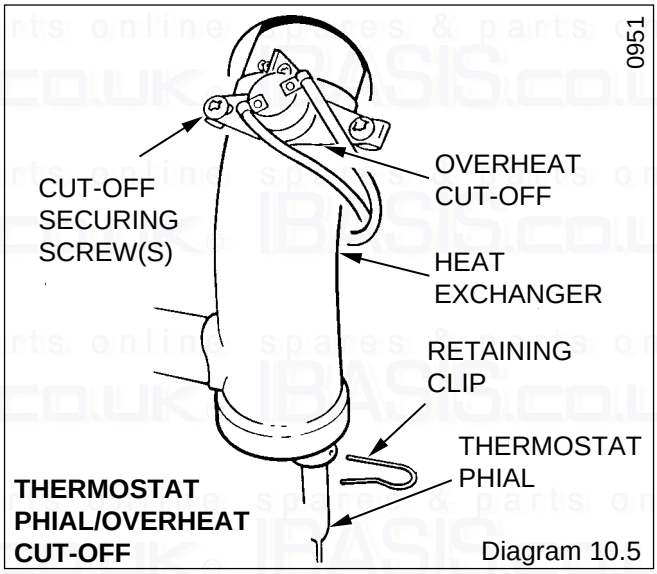

THERMOSTAT PHIAL/OVERHEAT CUT-OFF Diagram 10.5

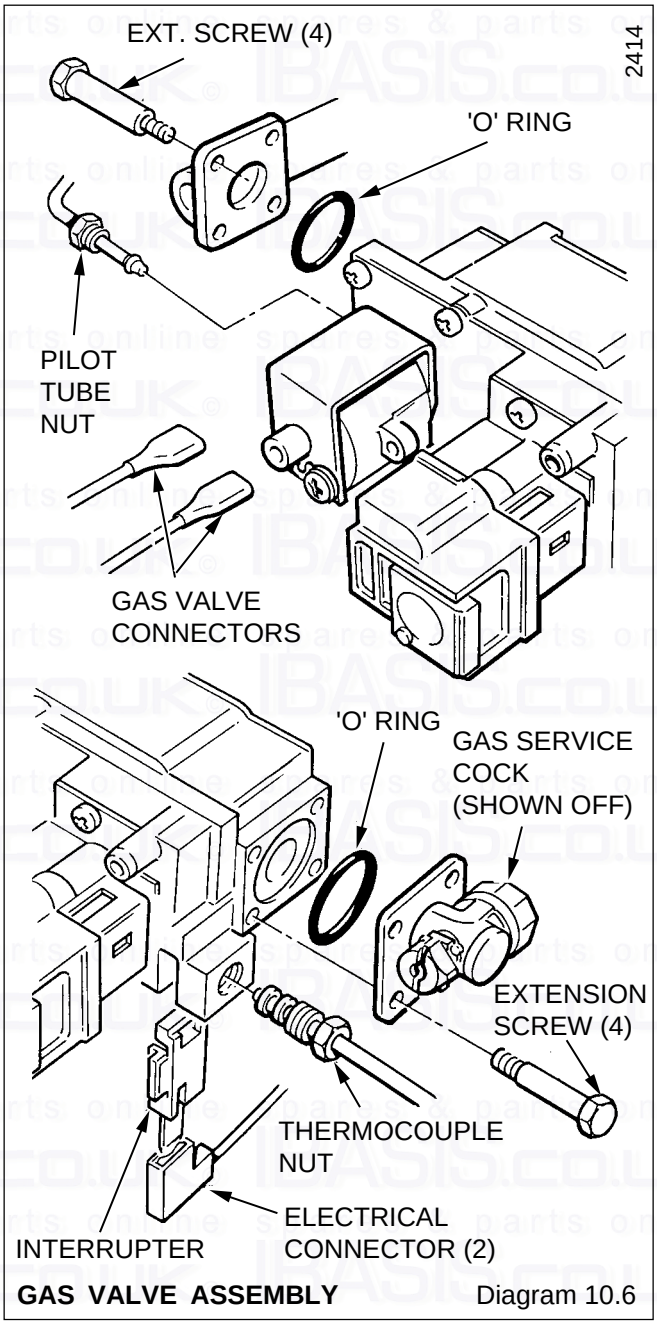

GAS VALVE ASSEMBLY Diagram 10.6

11 Fault Finding

Fault and Cause	Remedy
11.1 Pilot Goes Out after a Period of Remaining Alight	
Front cover not correctly fitted.	Fit parts correctly.
Flue parts not fitted or sealed properly.	Seal cavity or fit flue parts correctly as described in installation instructions.
Electrical supply failure causing over heat cutoff to operate.	Relight pilot.
Operating cut-off operating.	Refer to Section11.3.
Pump incorrectly wired.	Connect pump in accordance with diagram 7.2.
11.2 Main Burner Will Not Light	
External, remote controls not “On.”	Check that any remote controls are calling for heat.
Boiler thermostat not on.	Check boiler thermostat is in an “On” position, see also Section 11.9.
11.3 Thermostat Will Not Cut Out	
Thermostat phial not fitted in pocket.	Fit phial in pocket.
Faulty thermostat.	Replace thermostat.
11.4 Overheat Cutoff Cuts Out Prematurely	
Air in heating body.	Vent system. Alter system layout if necessary.
Water circulation low or stopped.	Pump not functioning correctly. Check pump is wire directly to the boiler. Alter system if necessary.
Overheat cutoff operates before boiler cycles on maximum boiler thermostat setting.	Change faulty overheat cutoff.
The correctly set overheat cutoff operates prematurely. There is no air in the heating body and water circulation satisfactory.	Change faulty heating body.
11.5 Insufficient Heat	
Thermostat set too low.	Increase setting.
Inlet gas pressure inadequate.	Increase gas pressure.
Governor setting incorrect. (ensure thermostat is on maximum setting).	Check burner pressure against data label. Reset only if more than 10% away from required figure.
11.6 Appliance Noisy in Operation*	
Overgassed.	Check burner pressure against data label and adjust only if more than 10% away from stated required figure.
Complete lack of water.	Check system controls for correct installation or correct type of controls.
Air in system.	Remove air from system. When system is first commissioned the air dissolved may take some time to boil out, therefore attempts should be made to vent air during the first weeks of the installation. Check venting of system, as air bubbles can remain suspended in the water if system is not well vented.
Water flow rate.	Check that flow rate is correct. Check that pump is correct size and is correctly adjusted. Bypass not fitted or set correctly.

* There remains on most boilers a residual noise more noticeable at high temperatures. Normal operation of the boiler over a period should remove most noise.

11.7 Thermocouple and Overheat Device.

To test the thermocouple a meter with a range of 0 to 30mV is required.

Symptoms: The pilot burner fails to stay alight.

Test the thermocouple, overheat cutoff and thermocouple connectors as described in fault finding chart 11.2.

Check the millivoltage of the thermocouple closed circuit at points “A” and “E”, see diagram 11.1.

This should be within the range 6 to 13mV.

Take the millivoltage drop reading and refer to thermocouple/ overheat cutoff fault finding diagram 11.2.

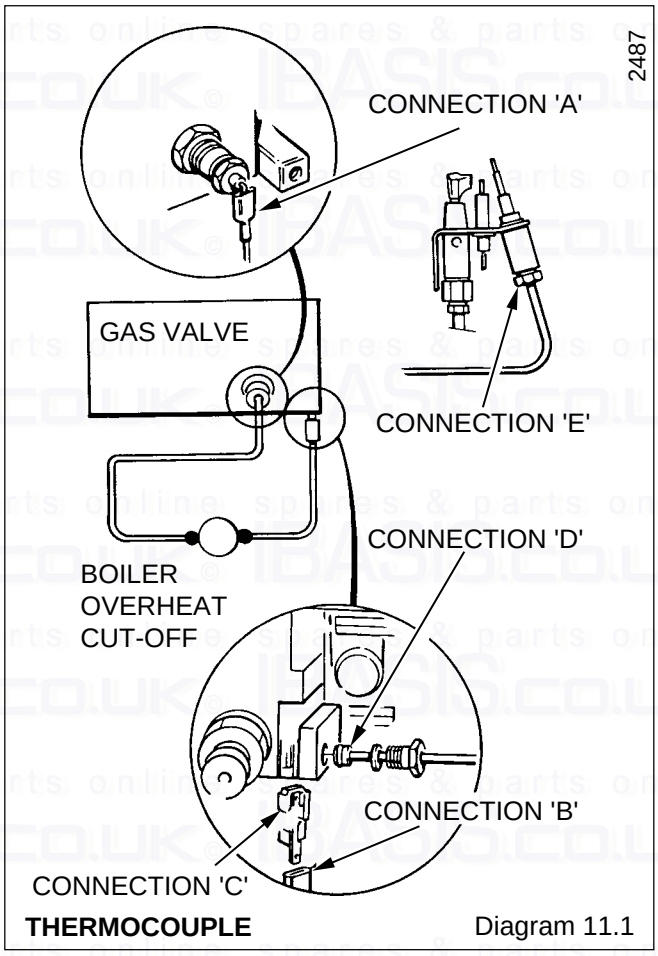

THERMOCOUPLE Diagram 11.1

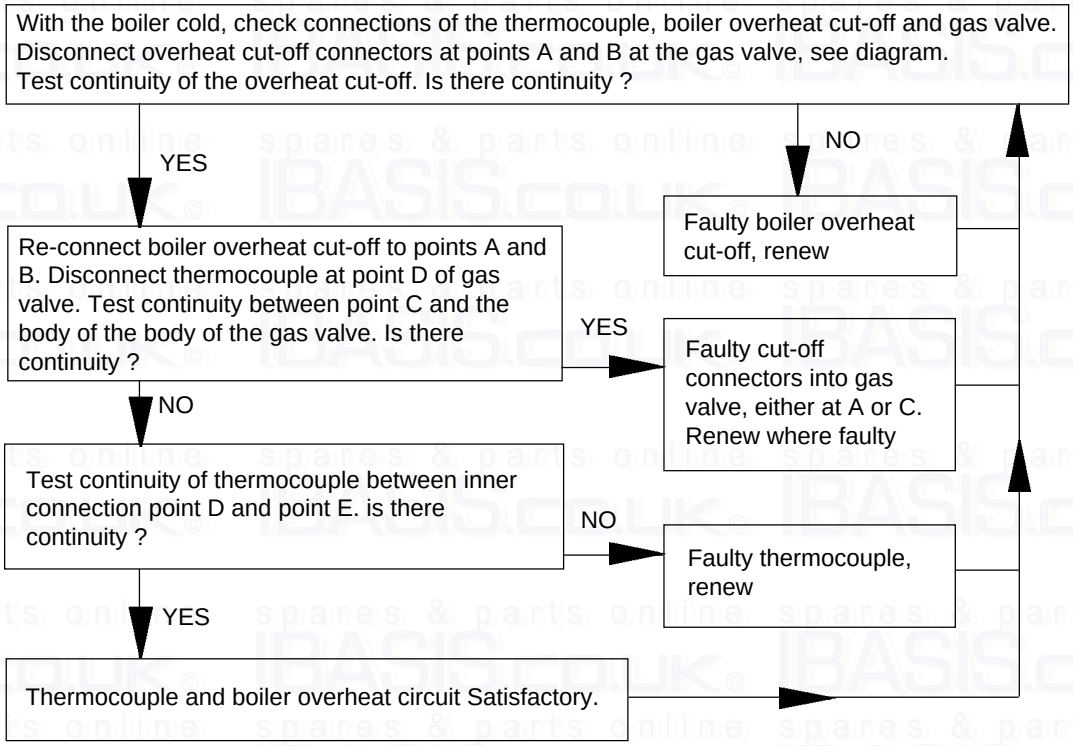

THERMOCOUPLE AND BOILER OVERHEAT CUTOFF FAULT FINDING Diagram 11.2

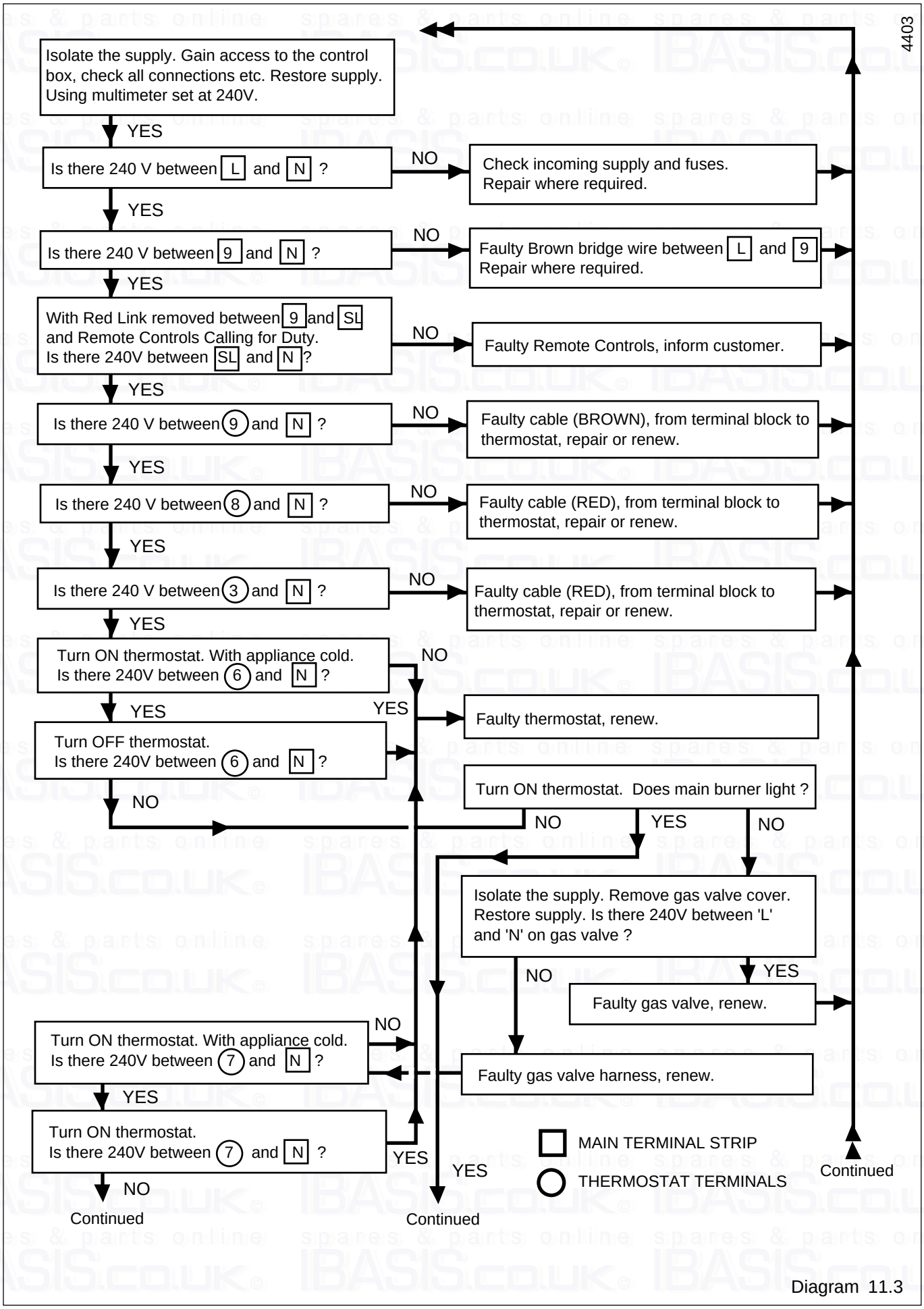
4403
Isolate the supply. Gain access to the control box, check all connections etc. Restore supply. Using multimeter set at 240V.
YES
Is there 240 V between L and N ?
NO
Check incoming supply and fuses. Repair where required.
YES
Is there 240 V between 9 and N ?
NO
Faulty Brown bridge wire between L and 9 Repair where required.
YES
With Red Link removed between 9 and SL and Remote Controls Calling for Duty. Is there 240V between SL and N ?
NO
Faulty Remote Controls, inform customer.
YES
Is there 240 V between 9 and N ?
NO
Faulty cable (BROWN), from terminal block to thermostat, repair or renew.
YES
Is there 240 V between 8 and N ?
NO
Faulty cable (RED), from terminal block to thermostat, repair or renew.
YES
Is there 240 V between 3 and N ?
NO
Faulty cable (RED), from terminal block to thermostat, repair or renew.
YES
Turn ON thermostat. With appliance cold. Is there 240V between 6 and N ?
NO
YES
Faulty thermostat, renew.
YES
Turn OFF thermostat. Is there 240V between 6 and N ?
NO
Turn ON thermostat. Does main burner light ?
NO
YES
NO
Isolate the supply. Remove gas valve cover. Restore supply. Is there 240V between 'L' and 'N' on gas valve ?
NO
YES
Faulty gas valve, renew.
Turn ON thermostat. With appliance cold. Is there 240V between 7 and N ?
NO
Faulty gas valve harness, renew.
YES
Turn ON thermostat. Is there 240V between 7 and N ?
YES
NO
Continued
YES
Continued
MAIN TERMINAL STRIP
THERMOSTAT TERMINALS
Continued

Diagram 11.3

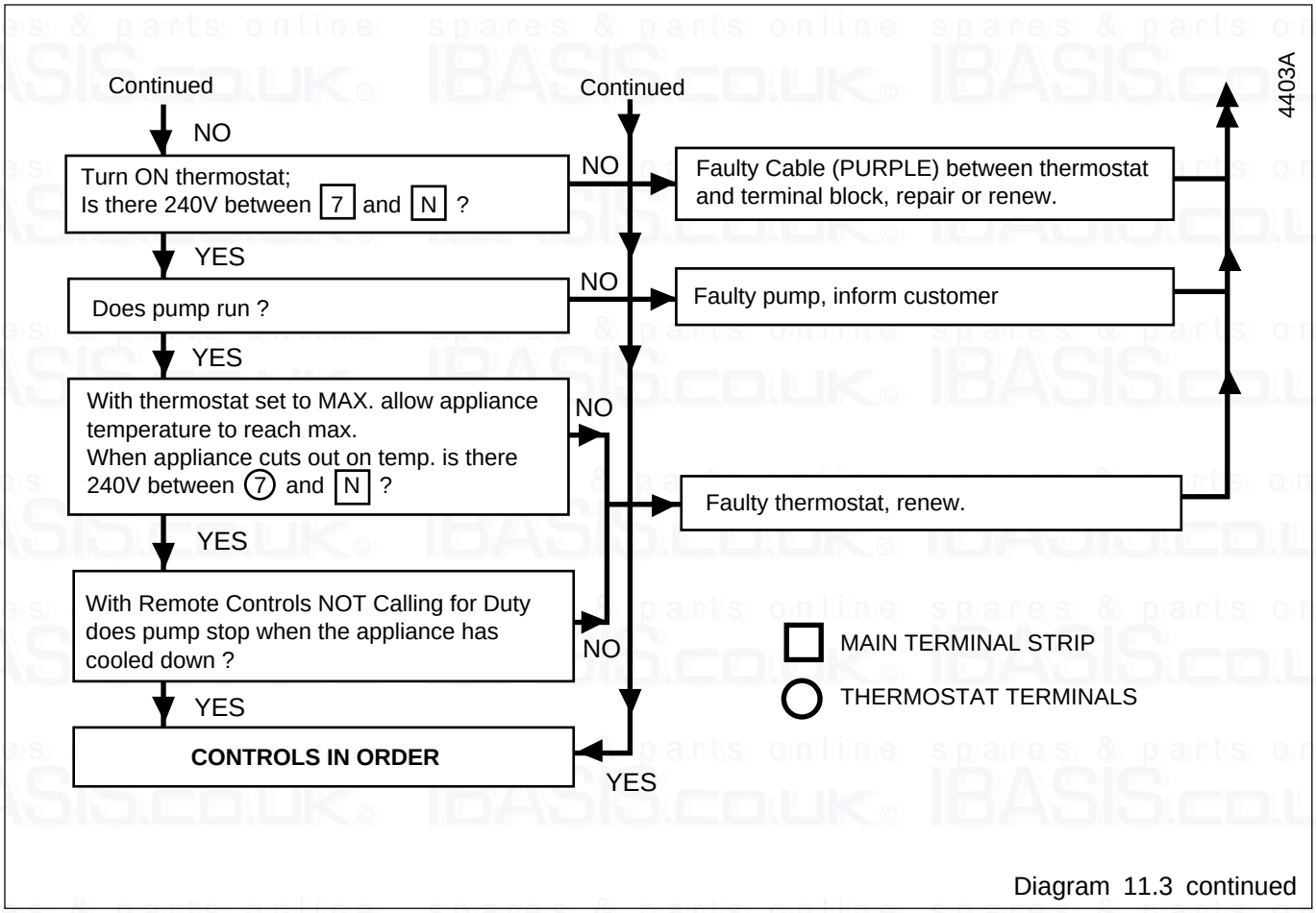

Diagram 11.3 continued

11.8 Electrical

IMPORTANT. On completion of the service/fault finding task which has required the breaking and remaking of electrical connections then the checks, earth continuity, polarity and resistance to earth must be repeated, using a suitable multimeter.

To check the boiler thermostat and multi-functional control (gas valve), see diagram 11.3 and functional flow wiring diagram 11.4.

To check thermostat pump overrun circuit see diagram 11.3 and functional flow wiring diagram 11.4.

11.9 Pilot

Refer to fault finding for pilot, see diagram 11.5.

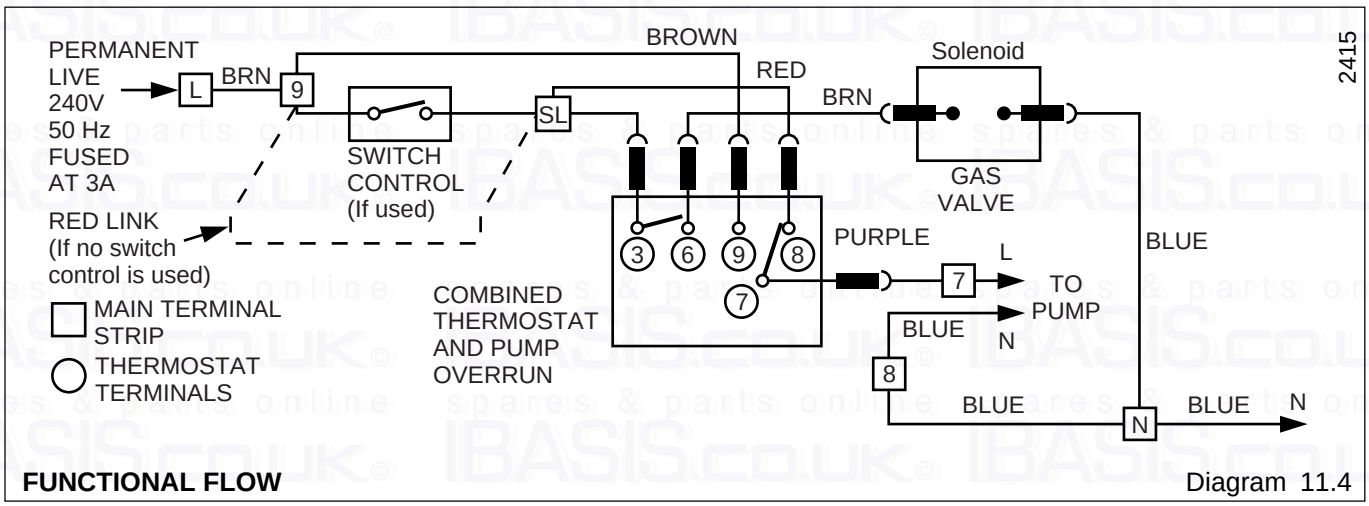

FUNCTIONAL FLOW

Diagram 11.4

PILOT WILL NOT LIGHT
START HERE

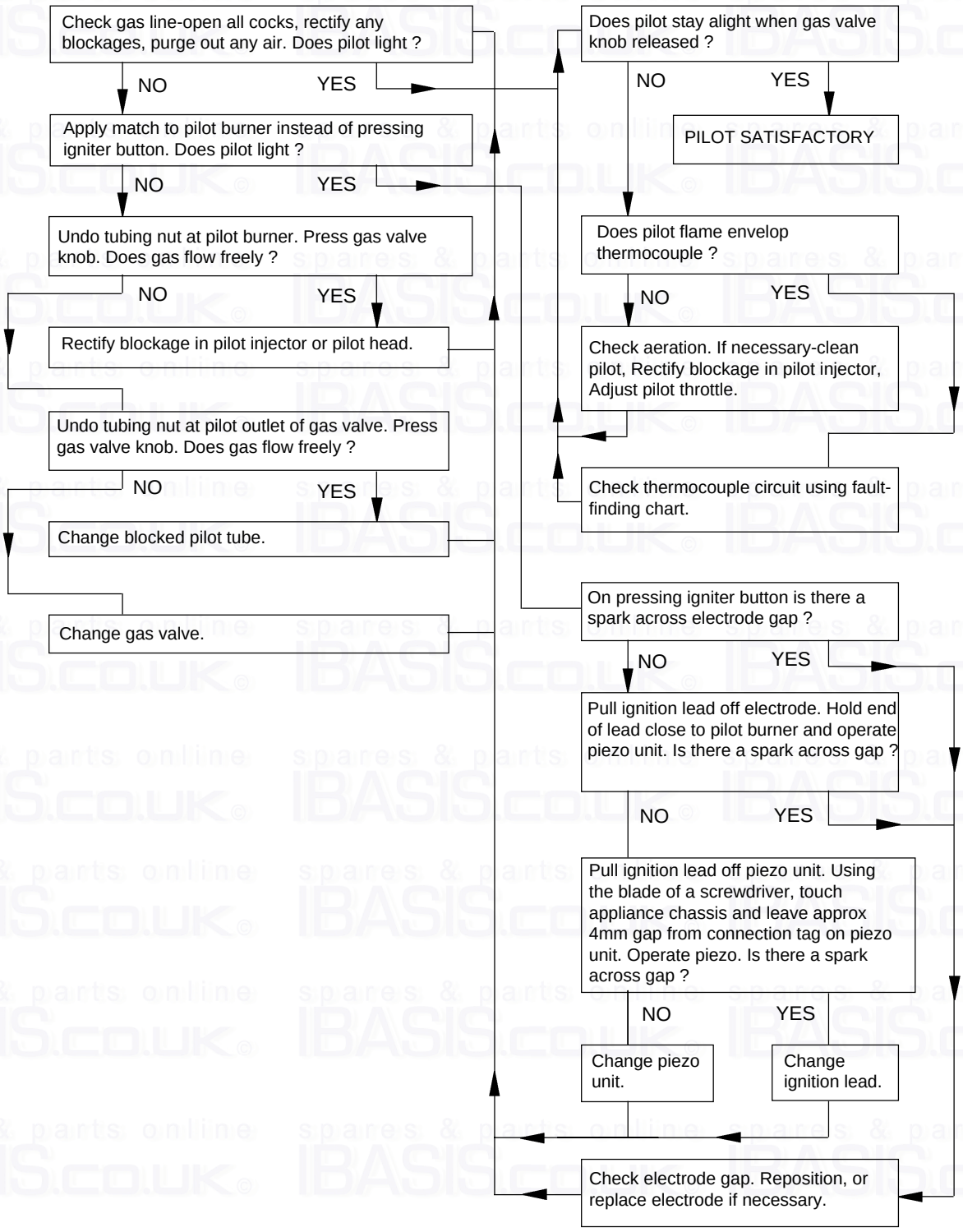

BOILER PILOT FAULT-FINDING

Diagram 11.5

12 Spare Parts

12.1 Ordering

When ordering spare parts, quote the part number, description, serial number and model from the label on the boiler, see diagram 8.1.

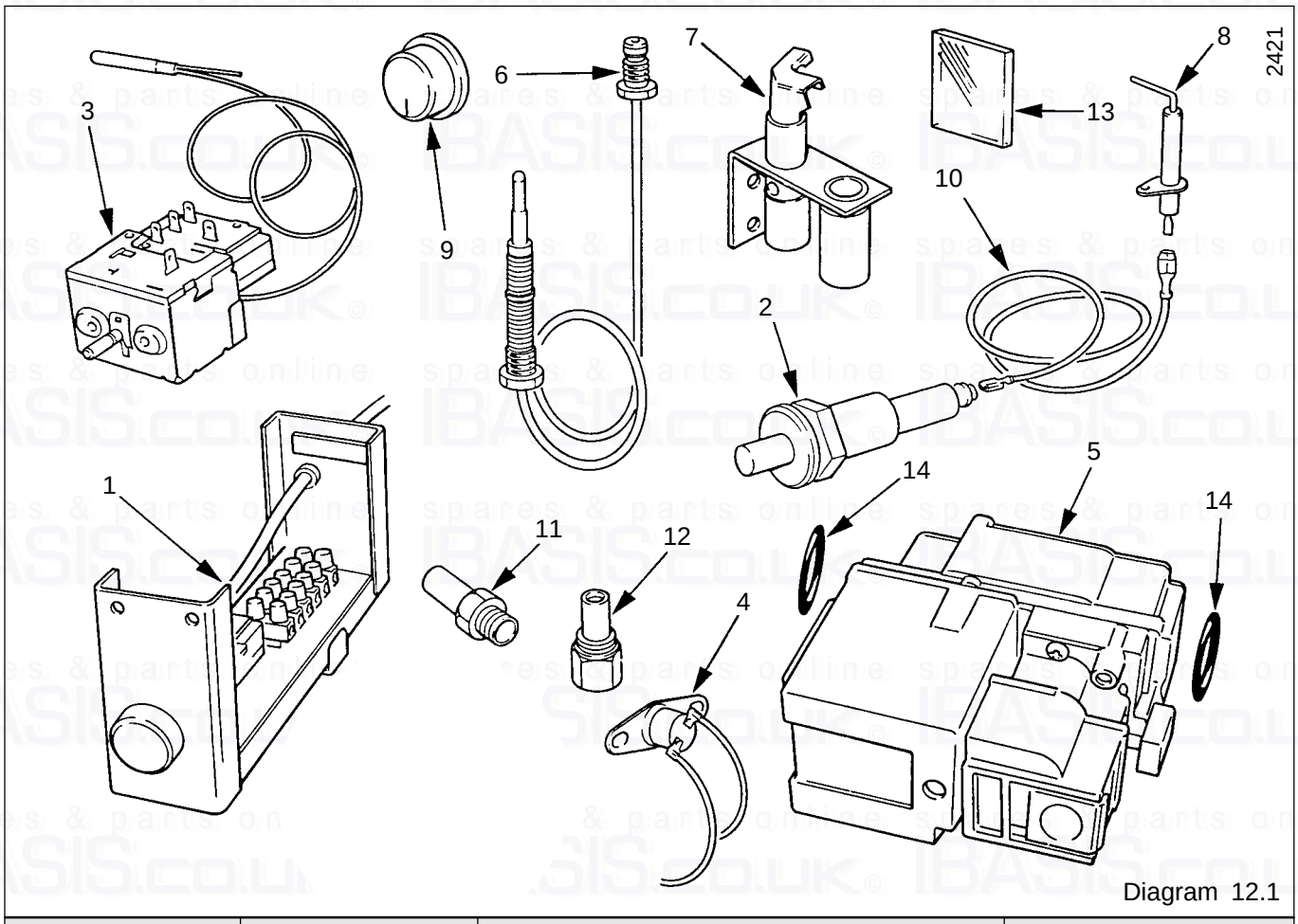

Diagram 12.1

Key No	Part No	Description	GC Part No
1	433504	Electrical control box	313 053
2	900501	Piezo unit	384 146
3	416189	Boiler thermostat assembly	355 501
4	800014	Overheat cutoff assembly	313 064
5	800015	Gas valve assembly - incs 14	313 067
6	900000	Thermocouple	381 651
7	203415	Pilot burner - incs 12	394 161
8	202600	Electrode	384 149
9	416144	Thermostat control knob	355 401
10	WW4612	Ignition lead	355 500
11	203004	Injector - 3.25 or Cat 30-1200	384 160
12	203509	Pilot injector	394 163
13	411194	Sight glass	355 153
14	208040	“O” ring - gas valve (2off)	334 674

Because of our constant endeavour for improvement, details may vary slightly from those shown in these instructions.