221505A.11.98

Glow-worm

Instructions for Use
Installation and Servicing

To be left with the user

Economy Plus

80F

G.C. No. 41 319 64

Fanned Flue Boilers

CE

BS 6332
BS 5258

This is a Cat I_{2H} Appliance

Reference in these instructions to British Standards and Statutory Regulations/Requirements apply only to the United Kingdom. For Ireland the rules in force must be used.

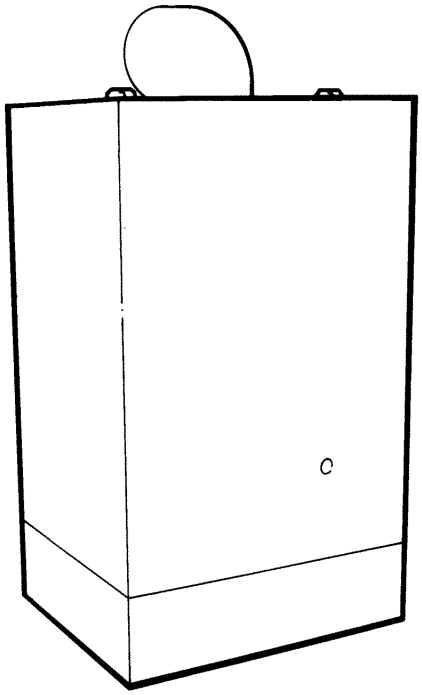

The instructions consist of three parts, User, Installation and Servicing Instructions, which includes the Guarantee Registration Card. The instructions are an integral part of the appliance and must, to comply with the current issue of the Gas Safety (Installation and Use) Regulations, be handed to the user on completion of the installation.

Guarantee Registration

Thank you for installing a new Glow-worm appliance in your home.
Glow-worm appliances' are manufactured to the very highest standard so we are pleased to offer our customers' a Comprehensive First Year Guarantee.

In the center pages are to be found your Guarantee Registration Card, which we recommend you complete and return as soon as possible.

If this card is missing you can obtain a copy or record your registration by telephoning the Heatcall Customer Service number 01773 828100.

Our Guarantee gives you peace of mind plus valuable protection against breakdown by covering the cost of:

- ☑ ***All replacement parts***
- ☑ ***All labour charges***
- ☑ ***All call-out charges***

REGISTER YOUR GLOW-WORM APPLIANCE
FOR 1ST YEAR GUARANTEE PROTECTION

CALL 0181 380 2555

HEATCALL
One Contact Local Service

Customer Services:
Tel: (01773) 828100
Fax: (01773) 828070

Hepworth Heating Ltd.,
Nottingham Road, Belper, Derbyshire. DE56 1JT
General/Sales enquiries:
Tel: (01773) 824141 Fax: (01773) 820569

Important Information

Testing and Certification

This boiler is tested and certificated for safety and performance. It is therefore important that no alteration is made to the boiler, without permission, in writing, from Hepworth Heating Ltd.

Any alteration not approved by Hepworth Heating Ltd., could invalidate the certification, boiler warranty and may also infringe the current issue of the Statutory Requirements, see Section 1.4.

CE Mark

This boiler meets the requirements of Statutory Instrument No. 3083 The boiler (Efficiency) Regulations, and therefore is deemed to meet the requirements of Directive 92/42/EEC on the efficiency requirements for new hot water boilers fired with liquid or gaseous fuels.

Type test for purposes of Regulation 5 certified by: Notified body 0086.

Product/productioncertifiedby: Notified body 0086.

The CE mark on this appliance shows compliance with:

1. Directive 90/396/EEC on the approximation of the laws of the Member States relating to appliances burning gaseous fuels.
2. Directive 73/23/EEC on the harmonization of the Laws of the Member States relating to the electrical equipment designed for use within certain voltage limits.
3. Directive 89/336/EEC on the approximation of the Laws of the Member States relating to electromagnetic compatibility.

INFORMATION FOR THE INSTALLER AND SERVICE ENGINEER.

Under Section 6 of The Health and Safety at Work Act 1974, we are required to provide information on substances hazardous to health.

CERAMIC FIBRE/INSULATION PADS, GLASSYARN.

These can cause irritation to skin, eyes and the respiratory tract. If you have a history of skin complaint you may be susceptible to irritation. High dust levels are usual only if the material is broken. Normal handling should not cause discomfort, but follow normal good hygiene and wash your hands before eating, drinking or going to the lavatory. If you do suffer irritation of the eyes or severe irritation to the skin seek medical attention.

THERMOSTATS

These contain very small amounts of xylene in the sealed phial and capillary. If broken, under normal circumstances the fluid does not cause a problem, but in case of skin contact, wash with cold water. If swallowed drink plenty of water and seek medical attention.

CUT-OFF DEVICES

These contain activated charcoal and a very small amount of chlorodifluormethane in the sealed phial and capillary. If broken, under normal circumstances the fluid does not cause a problem. If there is irritation to the eyes or skin then seek medical attention.

CONTENTS	DESCRIPTION	SECTION	PAGE No.
INSTRUCTIONS FOR USE	Introduction		3
	Lighting the Boiler		4
INSTALLATION INSTRUCTIONS	General Data	1	5
	Water Systems	2	7
	Boiler Location	3	10
	Flue	4	11
	Preparation	5	13
	Water Connection	6	18
	Flue Assembly Installation	7	18
	Gas Connection	8	20
	Electrical Connection	9	20
	Commissioning	10	21
	Completion	11	24
SERVICING INSTRUCTIONS	Servicing	12	25
	Fault Finding	13	26
	Replacement Parts	14	31
	Spare Parts	15	35

Introduction

Please read these instructions and follow them carefully for the safe and economical use of your boiler.

The Economy Plus “F” Range are boilers designed to provide central heating and indirect domestic hot water from a fully pumped system with a fully indirect cylinder.

Important Notice

This boiler is for use only on natural gas G20 gas.

Gas Safety (Installation and Use) Regulations.

In your interest and that of gas safety it is the Law that ALL gas appliances are installed by a competent person in accordance with the current issue of the above regulations.

Gas Leak or Fault

If a gas leak or fault exists or is suspected, the BOILER MUST BE TURNED OFF, including the electrical supply and MUST NOT BE USED UNTIL THE FAULT HAS BEEN PUT RIGHT. Advice/help should be obtained from your installation/servicing company or the local gas undertaking.

Maintenance/Servicing

To ensure the continued efficient and safe operation of the boiler it is recommended that it is checked and serviced as necessary at regular intervals. The frequency of servicing will depend upon the particular installation conditions and usage, but in general once a year should be enough.

If this appliance is installed in a rented property there is a duty of care imposed on the owner of the property by the current issue of the Gas Safety (Installation and Use) Regulations, Section 35.

It is the Law that any servicing must be carried out by a competent person.

To obtain service, please call your installer or Heatcall (Glow-worm’s own service organisation) using the telephone number given on the case tray.

Boiler Clearances

If fixtures are positioned close to the boiler space must be left as shown in diagram 1. Enough space must also be left in front of the boiler to allow for servicing.

Boilers Installed in a Compartment or Cupboard

If the boiler is installed in a cupboard or compartment do not obstruct any ventilation openings.

Do not use the cupboard or compartment for storage.

Regularly make sure that the air vent openings are clear of obstructions.

Cleaning

WARNING. This appliance contains metal parts (components) and care should be taken when handling and cleaning, with particular regard to edges.

Clean the casing occasionally by wiping it over with a damp soapy cloth or dry polishing duster.

Do not use an abrasive cleaner.

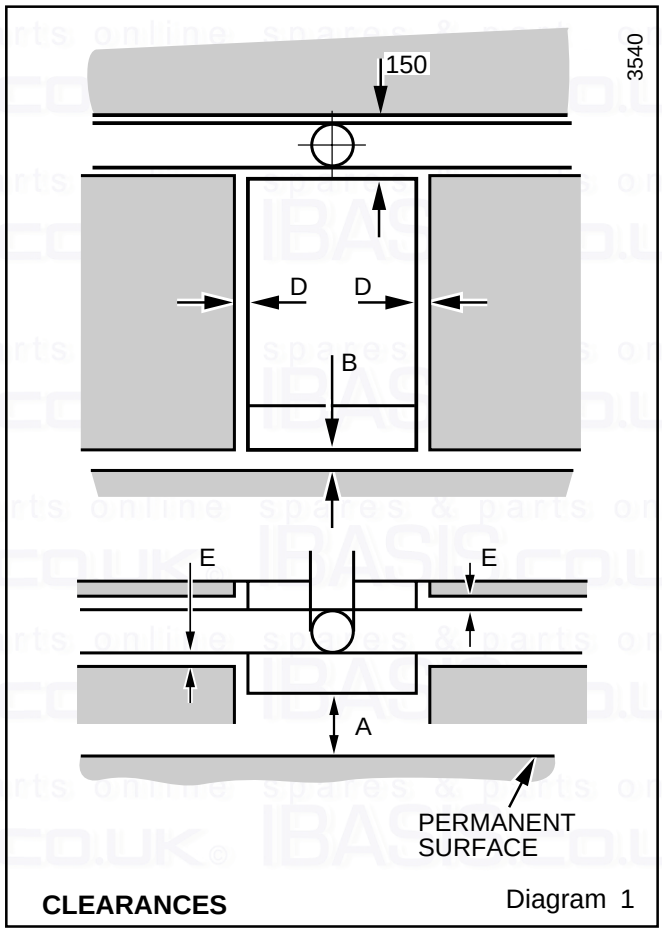

CLEARANCES Diagram 1

Boiler Electrical Supply

WARNING. The boiler must be earthed.

The boiler must only be connected to a 240V~50Hz supply, protected by a 3A fuse.

All wiring must be in accordance with the current issue of BS7671.

The colours of three core flexible cable are:

Brown - live, blue - neutral, green and yellow - earth.

As the markings on your plug may not correspond with these colours, continue as follows,

The wire coloured blue must be connected to the terminal marked “N” or “Black”.

The wire coloured brown must be connected to the terminal marked “L” or “Red”.

The wire coloured green and yellow must be connected to the plug terminal marked “E” or “Green” or the earth symbol "⏚" .

Electrical Supply Failure

Failure of the electrical supply will cause the burner to go out. Should this happen, operation of the appliance will normally resume after the electrical supply is restored.

If the burner does not relight after an electrical supply failure the overheat device may need resetting, refer to diagram 2, remove the controls tray and press the reset button.

If the cutoff occurs again, turn the appliance off and contact your installation/servicing company.

Data/Serial Number Label

The GC number of the appliance can be found on the Data label, positioned at the top right of the inner cover.

The model name and serial number are located on the control box cover, visible when the controls tray is removed.

To Turn the Boiler On

Sealed Water Systems.

CAUTION. A sealed water system must be filled and pressurised by a competent person.

Only light the boiler when you are sure that the system and boiler have been filled and pressurised.

The pressure gauge should show at least 0.7bar, anything less than this figure could indicate a leak and you MUST contact your installation/servicing company.

If there is any doubt about the boiler being full of water consult your installation/servicing company.

All Systems

Turn the electrical supply on to the boiler and check that any remote controls are set to your requirements (refer to manufacturer's instructions for these items).

Remove the controls tray by withdrawing it forwards.

Turn the boiler thermostat knob clockwise to any position between "MIN" and "MAX", see diagram 2. The maximum setting is about 82ºC (180ºF).

The boiler lighting operation is now automatic as follows:

The fan operates, followed by an ignition spark until the pilot is lit. When the pilot is alight the ignition switches off and the main burner lights. The flames can be seen through the viewing window.

The main burner will remain alight until switched off by the boiler thermostat or other remote control.

If the boiler thermostat is turned Off, by hand, wait at least 30 seconds before turning on again.

When the boiler goes off, both the pilot and main burner go out.

The automatic lighting sequence will operate again when heat is required.

Refit the controls tray.

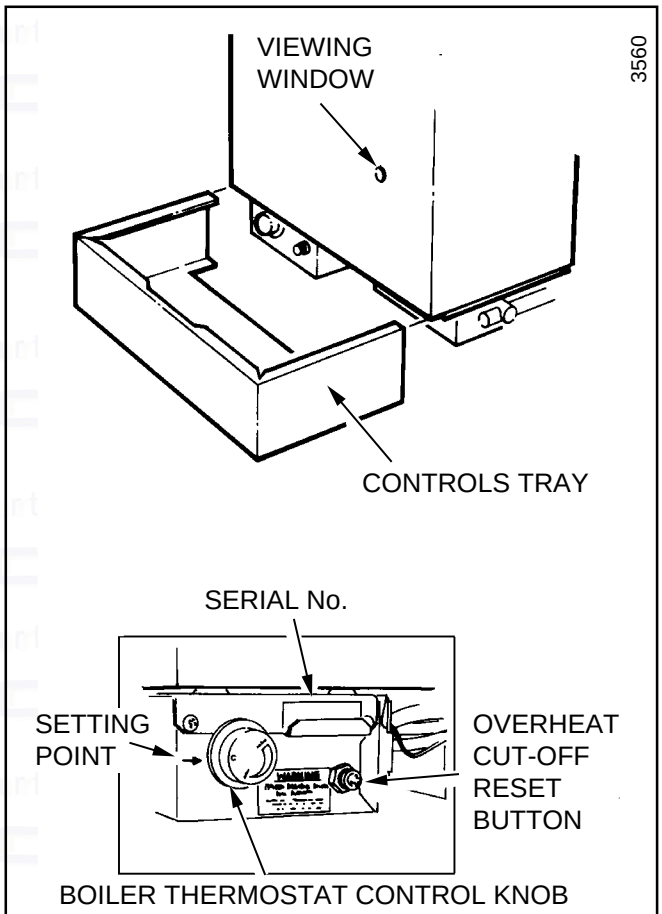

BOILER CONTROLS Diagram 2

To Turn the Boiler Off

For short periods, turn thermostat control knob anti-clockwise until "O" is against the setting point. To relight the main burner, turn the thermostat knob clockwise to any setting between "MIN" and "MAX".

For longer periods, turn the thermostat control knob anti-clockwise until "O" is against the setting point.

Switch off the electrical supply to the boiler.

To relight follow the sequence given above.

Protection Against Freezing

If the boiler is to be out of use for any long period of time during severe weather conditions we recommend that the whole of the system, including the boiler, be drained off to avoid the risk of freezing up. Make sure that, if fitted, the immersion heater in the cylinder is switched off.

If you have a sealed water system contact your installation/servicing company as draining, refilling and pressurising must be carried out by a competent person.

1 General

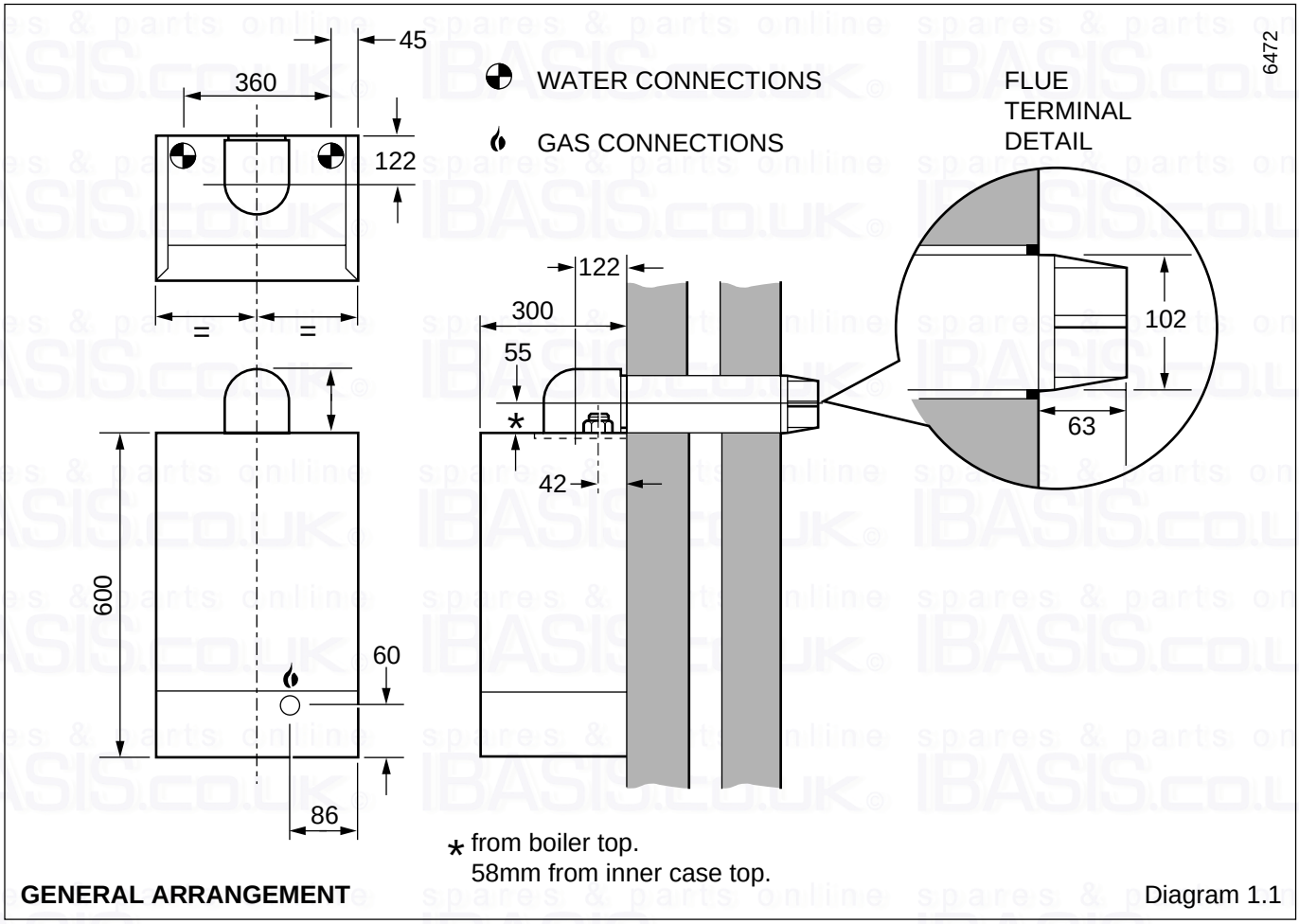

GENERAL ARRANGEMENT Diagram 1.1

1.1 Important Notice

This boiler is for use only on G20 gas.

The boiler is delivered in one pack.

Wherever possible, all materials, appliances and components to be used shall comply with the requirements of applicable British Standards.

Where no British Standard exists, materials and equipment should be fit for their purpose and of suitable quality and workmanship.

This boiler must have fully pumped circuits, but is suitable for use with open vented or sealed systems.

This boiler is not suitable for outdoor locations.

1.2 Sheet Metal Parts

WARNING. When installing or servicing the boiler care should be taken when handling sheet metal parts to avoid any possibility of personal injury.

1.3 Statutory Requirements

The installation of the boiler MUST be carried out by a competent person in accordance with the relevant requirements of the current issue of:

Manufacturer's instructions, supplied.

The Gas Safety (Installation and Use) Regulations, The Building Regulations, The Building Standards (Scotland) Regulations (applicable in Scotland), local Water Company Bye-laws, The Health and Safety at Work Act, Control of Substances Harmful to Health, The Electricity at Work Regulations and any applicable local regulations.

TABLE 1. *ECONOMY PLUS* DATA

MODEL	**80F**
LIFTING WEIGHT	26.5Kg (58.4lb)
TOTAL WEIGHT	33.0Kg (72.8lb)
WATER CONTENT	0.8Litre (1.4pt)
GAS CONNECTION	Rc $^1/_2$ ($^1/_2$ in. BSPT)
WATER CONNECTION	28mm copper, **flow** at right, **return** at left
ELECTRICITY RATING	65W, internal fuse F1A.
ELECTRICITY SUPPLY	240V~50Hz Fused 3A
DATA LABEL	On the inner case front

1 General

Detailed recommendations are contained in the current issue of the following British Standards and Codes of Practice, BS4814, BS5440 Part 1 and 2, BS5449, BS5546, BS6700, BS6798, BS6891, BS7074 Part 1 and 2. BS7478, BS7593, BS7671.

Manufacturer's notes must not be taken as overriding statutory requirements.

1.4 B.S.I. Certification

The boiler is certificated to the current issue of BS6332 Part 1, invoking the current issue of BS5258 Part 1 for performance and safety. It is, therefore, important that no alteration is made to the boiler, without permission, in writing, from Hepworth Heating Ltd.

Any alteration that is not approved by Hepworth Heating Ltd., could invalidate the B.S.I. Certification of the boiler, the warranty and could also infringe the current issue of the Statutory Requirements.

1.5 General Data

The data label is positioned on the inner case visible when the front panel is removed.

The serial number plate is positioned on the control box cover, visible when the controls tray is removed.

The General Arrangement diagram 1.1 and all other dimensions are given in millimetres.

General Data refer Table 1

1.6 Range Rating

The boiler is range rated and is factory set to maximum, it may be adjusted to suit individual system requirements, refer to Table 2.

1.7 Gas Supply

The gas installation must be in accordance with the current issue of BS6891.

The supply from the governed meter must be of adequate size to provide a steady inlet working pressure of 20mbar (8in wg) at the boiler.

On completion, test the gas installation for soundness using the pressure drop method and leak detection fluid, purge in accordance with the current issue of BS6891.

1.8 Electrical Supply

WARNING. This boiler must be earthed.

All system components shall be of the approved type and wiring shall comply with and be connected in accordance with the requirements of the current issue of BS7671 and any applicable local regulations.

Connection of the boiler and system controls to the mains supply must be through a common isolator and must be fused 3A maximum. This method of connection should be, preferably, by a fused double pole isolating switch, provided it has a minimum contact separation of 3mm on both poles. This should be readily accessible and preferably adjacent to the appliance. It should supply the appliance only and be easily identifiable as so doing.

Alternatively an unswitched shuttered socket outlet and 3A fused 3 pin plug both to the current issue of BS1363 may be used provided that they are not used in a room containing a bath or shower.

Wiring to the boiler must be PVC insulated type to the current issue of BS6500 Table 16, not less than 0.75mm^2(24/0.20mm).

1.9 Heating System Controls

The heating system should have installed: a programmer and room thermostat controlling the boiler.

Thermostatic radiator valves may be installed in addition to the room thermostat.

Note: For further information, see The Building Regulations 1991 - Conservation of fuel and power, 1995 edition - Appendix G, table 4b.

TABLE 2. *MODEL 80F*

RANGE RATING		min	medium	max
NOMINAL HEAT INPUT(GROSS)	*Btu/h*	76,000	87,500	98,800
	kW	22.27	25.64	28.96
NOMINAL HEAT OUTPUT	*Btu/h*	60,000	70,000	80,000
	kW	17.58	20.52	23.45
BURNER SETTING PRESSURE	*m bar*	7.7	10.4	13.2
	in.w.g	3.1	4.2	5.3
APPROX GAS RATE	*m^{3}h*	2.1	2.5	2.8
	ft^{3}h	76.0	87.5	98.8

Notes: Open Vented and Sealed Systems

See chart for pressure drop of the boiler diagram 2.1.

2.1 Draining Tap

The boiler is provided with a draining tap at the lower left hand side of the heat exchanger, to be used for draining the heat exchanger.

A draining tap must be provided at the lowest points of the system which will allow the entire system and hot water cylinder to be drained.

Draining taps shall be to the current issue of BS2879.

2.2 Safety Valve

A safety valve need not be fitted to an open vented system.

2.3 Circulating Pump

The pump should be fitted in the flow pipe from the boiler and have isolating valves each side, integral if possible.

A variable duty pump should be set to give a temperature difference of 11°C (20°F) between the flow and return with the thermostat set at "MAX" which is about 82°C (180°F), to give a design flow rate as shown in Table 3.

High resistance microbore systems may require a higher duty pump.

2.4 Bypass

A BYPASS MUST BE FITTED, see diagram 2.2 for a suitable position.

The flow rate through the boiler must not be allowed to fall below that given in Table 4.

Where the water system can allow the boiler and pump to operate on bypass only, a bypass must be placed at least 1.5m away from the boiler.

2.5 Inhibitor

Attention is drawn to the current issue of BS5449 and BS7593 on the use of inhibitors in central heating systems.

If an inhibitor is to be used, contact a manufacturer for their recommendations as to the best product to use.

If using in an existing system take special care to drain the entire system, including the radiators, then thoroughly flushing out before fitting the boiler whether or not adding inhibitor.

TABLE 3. DESIGN FLOW RATE at MAX OUTPUT		
MODEL 80F	30.3L/min	6.7gal/min

TABLE 4. MINIMUM FLOW RATE at MAX OUTPUT		
MODEL 80F	21.0L/min	4.6gal/min

2.6 Open (Vented) Water System

For an open (vented) system the boiler must be supplied from an unrestricted water supply taken from a feed and expansion cistern situated at a maximum height of 27.5metres (90ft) above the boiler.

The cold feed supply must be 15mm minimum size.

The vent must rise continuously and be unrestricted.

It is important that the relative positions of the pump, cold feed and open vent are as shown in diagram 2.2.

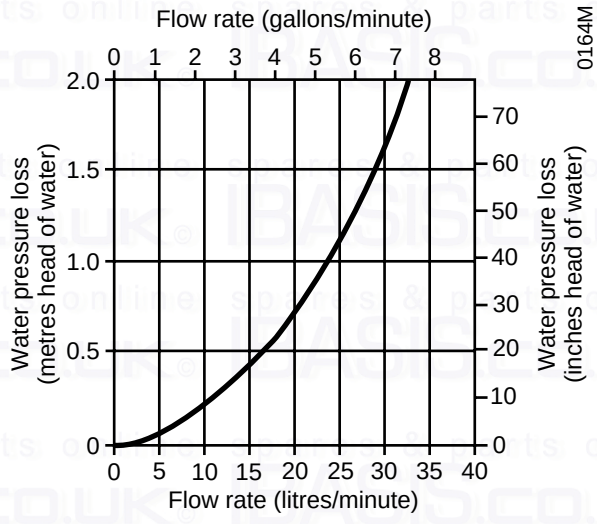

PRESSURE LOSS OF BOILER Diagram 2.1

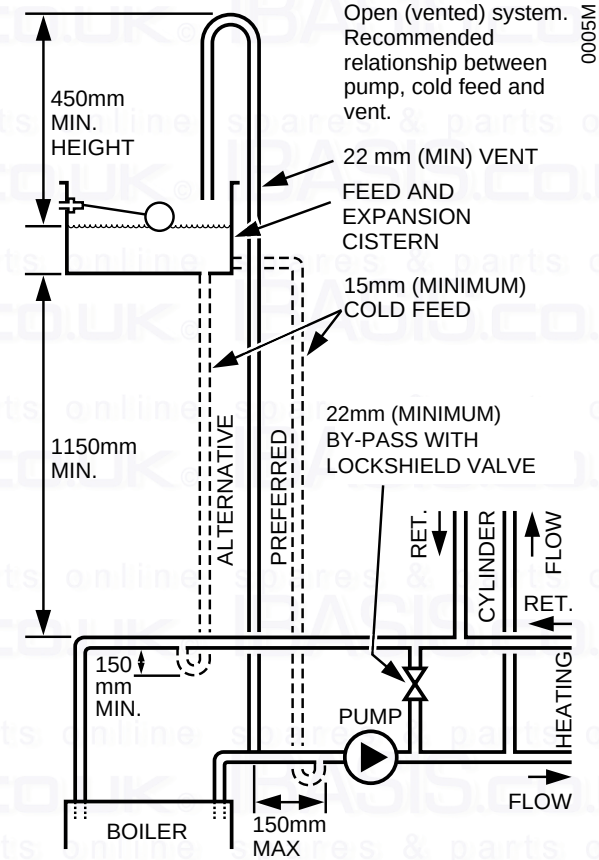

OPEN VENTED SYSTEM Diagram 2.2

2.7 Domestic Hot Water Cylinder

The hot water cylinder must be of the double feed fully indirect type. Not the single feed self priming type.

2.8 Sealed Water Systems

The installation must comply with the appropriate requirements of the current issue of BS5449, BS6759, BS6798, BS4814 and BS7074 Part 1 and 2.

See diagram 2.3 for a suggested layout.

2.9 Safety Valve

A safety valve must be fitted to a sealed water system.

It shall be preset, nonadjustable with a lift pressure of 3bar, incorporating seating of a resilient material, a test device and a connection for drain.

The drain from the safety valve must be routed clear of any electrical fittings and positioned so that any discharge can be seen.

2.10 Expansion Vessel

A diaphragm type expansion vessel, conforming to the current issue of BS4814 (see also BS7074 Part 1 and 2) must be connected at a point close to the inlet side of the circulating pump, see the diagrammatic layout, diagram 2.3, unless laid down differently by the manufacturer.

The expansion vessel volume depends on the total water system volume and the initial system design pressure. For any system an accurate calculation of vessel size is given in the current issue of BS7074 Part 1.

Example: For an initial system design pressure of 0.7bar, the minimum total vessel volume required is 0.063xTotal System volume.

Note: A higher initial design pressure requires a larger volume expansion vessel.

Guidance on vessel sizing is also given in the current issue of BS5449 and BS7074 Part 1.

The charge pressure must not be less than the static head of the system, that is, the height of the highest point of the system above the expansion vessel.

The water content of the boiler is given in the Data Table 1.

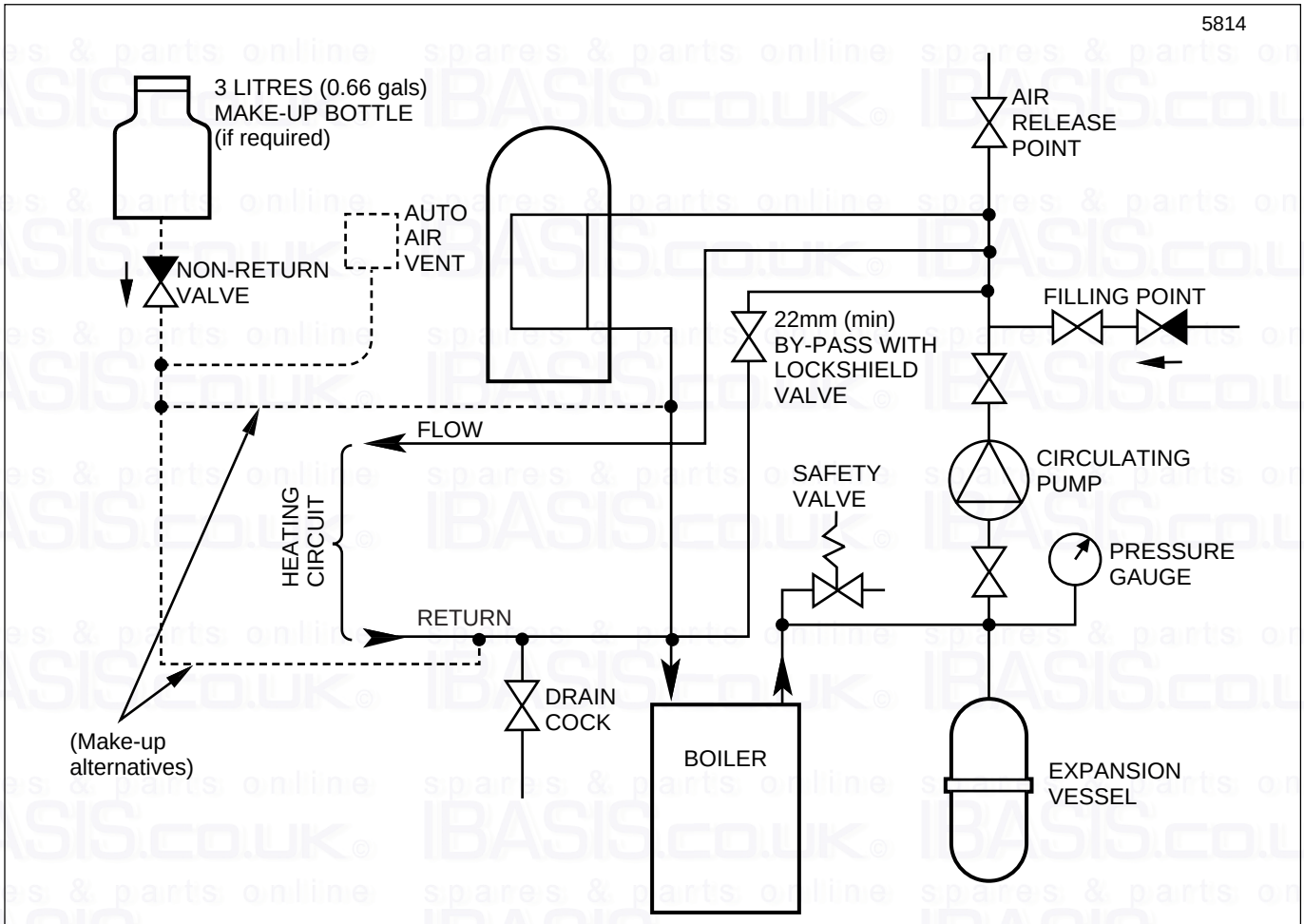

SEALED WATER SYSTEM DIAGRAMMATIC LAYOUT Diagram 2.3

2.11 Pressure Gauge

A pressure gauge with a set pointer and covering at least 0 to 4bar (0 to 60lb in^2) shall be fitted permanently to the system in a position where it can be seen when filling the system.

2.12 Domestic Hot Water Cylinder

SINGLE FEED INDIRECT CYLINDERS ARE NOT SUITABLE.

The hot water cylinder must be of the indirect coil type. It must be suitable for working at a gauge pressure of 0.35bar above the safety valve setting.

2.13 Water Makeup

Provision should be made for replacing water loss from the system using a make up bottle or filling loop mounted in a position higher than the top point of the system, connected through a non-return valve to the return side of either the heating circuit or the hot water cylinder.

Alternatively, provision for make up can be made using a filling loop.

2.14 Filling a Sealed System

Provision for filling the system at low level must be made. Three methods are shown in diagram 2.4. There must be no permanent connection to the mains water supply, even through a non-return valve.

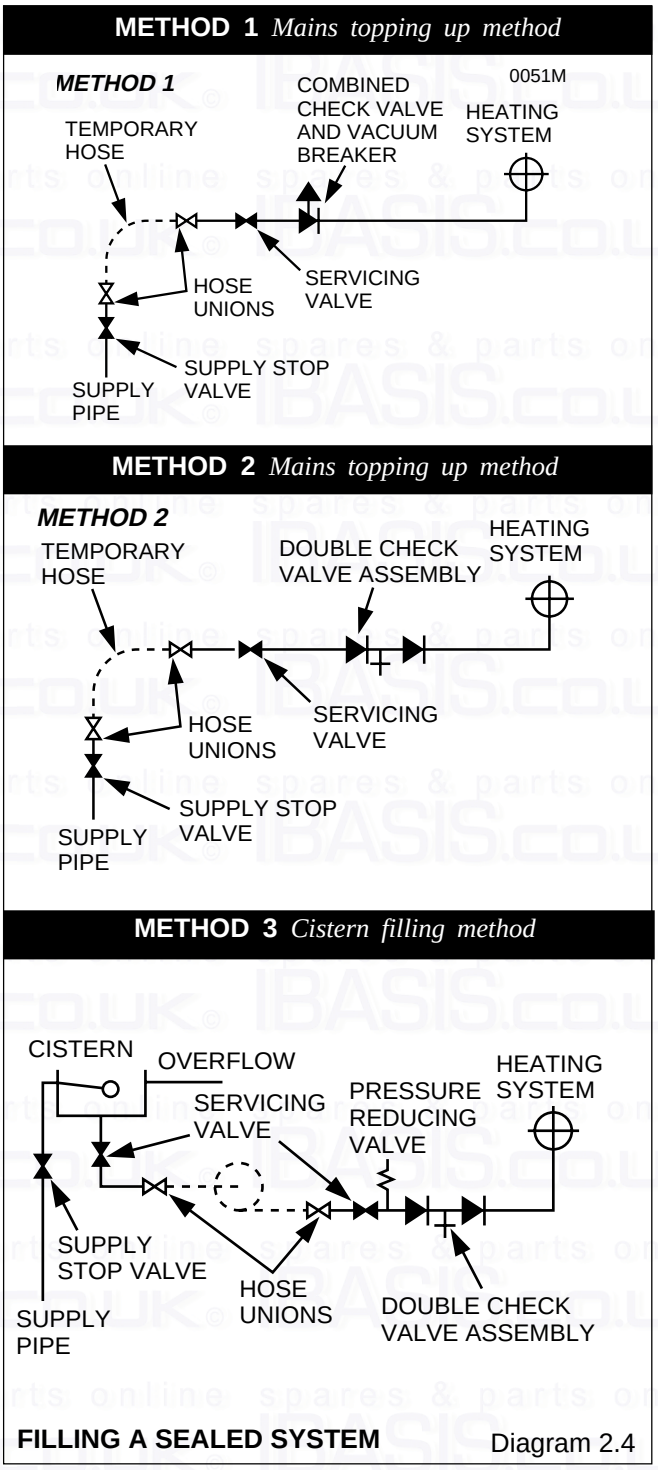

FILLING A SEALED SYSTEM Diagram 2.4

3 Boiler Location

3.1 Boiler Location

The boiler may be installed in any room although particular attention is drawn to the requirements of the current issue of BS7671 with respect to the installation of a boiler in a room containing a bath or shower. Any electrical switch or boiler control using mains electricity should be so situated that it cannot be touched by a person using the bath or shower. The electrical provisions of the Building Standards (Scotland) are applicable to such installations in Scotland.

The boiler must be mounted on a flat wall which is sufficiently robust to take its total weight, see Data Table 1.

3.2 Boiler Clearances

The boiler must be positioned so that at least the minimum operational and servicing clearances are as shown in diagram 3.2.

Additional clearance may be required around the boiler for installation purposes, dependant upon site conditions.

3.3 Timber Frame Buildings

If the boiler is to be installed in a timber frame building, it should be fitted in accordance with the British Gas Publication "Guide for Gas Installation in Timber Framed Housing" reference DM2. If in doubt, seek advice from the local gas undertaking or Hepworth Heating Ltd.

3.4 Room Ventilation

The boiler is room sealed, so when installed in a room or space a permanent air vent is not required.

3.5 Cupboard or Compartment Ventilation

Where the boiler is fitted in a cupboard or compartment, permanent high and low level ventilation must be provided. The ventilation areas required are given in Table 5.

Where the installation of the boiler will be in an unusual location, special procedures are necessary, refer to the current issue of BS6798 for guidance.

Make sure that the cupboard or compartment air vents are positioned to be clear of obstructions at all times.

A compartment used to enclose the boiler must be designed and constructed specifically for this purpose.

An existing cupboard or compartment modified for the purpose may be used. Refer to the current issue of BS6798 for guidance.

The doorway opening should be of sufficient size to allow for easy removal of the boiler.

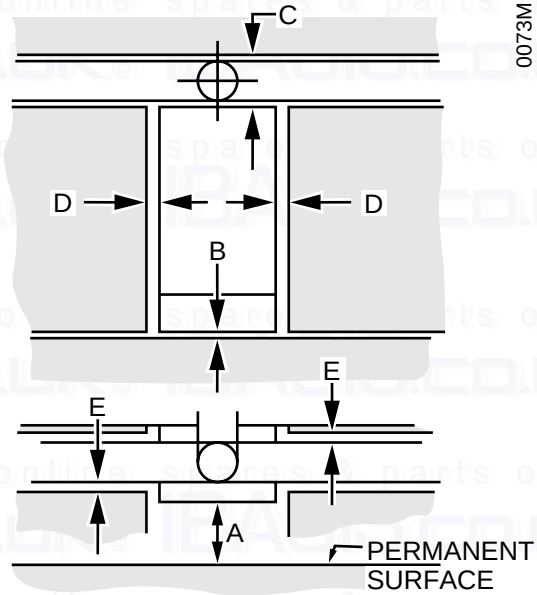

MINIMUM CLEARANCES	
A	500 •
B	78
C	*
D	10
E	5

• To a permanent surface

* SIDE FLUE - 220mm

* REAR FLUE - 120mm

WHERE EXTERNAL ACCESS TO THE FLUE IS NOT PRACTICAL THEN CLEARANCE OPPOSITE THE EXIT MUST BE ADEQUATE TO PERMIT INSTALLATION OF THE FLUE ASSEMBLY

CLEARANCES Diagram 3.1

TABLE 5. COMPARTMENT AIR VENTS

VENTILATION REQUIREMENTS	HIGH LEVEL VENT AREA		LOW LEVEL VENT AREA	
	cm^2	in^2	cm^2	in^2
VENTILATION FROM ROOM OR SPACE	261	40	261	40
VENTILATION FROM OUTSIDE	131	20	131	20

4.1 Flue

The flue must be installed in accordance with the current issue of BS5440 Part 1.

The air and flue duct connect to the top of the boiler using an elbow which can be positioned to the sides or rear.

The standard flue is able to provide the duct lengths ranges shown in diagram 4.2 rear flue and 4.3 side flue.

If a longer flue duct is required, do not extend the ductings.

A 1,2 and 3m flue system and terminal can be supplied. This is able to provide the duct length range as shown in diagram 4.2 for a rear flue, diagram 4.3 for a side flue.

4.2 Terminal Position

The minimum acceptable spacings from the terminal to obstructions and ventilation openings are as shown in diagram 4.1.

The boiler must be installed so that the terminal is exposed to the external air.

It is important that the position of the terminal allows the free passage of air across it at all times.

Car ports or similar extensions of a roof only, or a roof and one wall require special consideration with respect to any openings, doors, vents or windows under the roof. Care is required to protect the roof if it is made of plastic sheeting.

If the car port comprises of a roof and two or more walls, seek advice from the local gas company before installing the boiler.

Where the terminal is fitted within 600mm (24in) below plastic guttering an aluminium shield 1500mm (5ft) long should be fitted to the underside and immediately beneath the guttering or eaves.

Where the terminal is fitted within 450mm (18in) below eaves or painted guttering an aluminium shield 750mm (2ft6in) long should be fitted to the underside and immediately beneath the guttering or eaves.

4.3 Terminal Guard

A terminal guard is required if persons could come into contact with the terminal or the terminal could be subject to damage.

If a terminal guard is required, it must be positioned to provide a minimum of 50mm clearance from any part of the terminal and be central over the terminal, see diagram 4.1.

A suitable terminal guard can be obtained from:

Tower Flue Components Ltd.,
Morley Road,
Tonbridge,
Kent.
TN9 1RA

their reference K3.

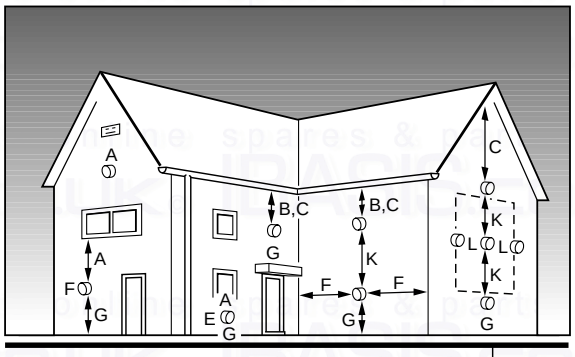

UNDER CAR PORT etc.

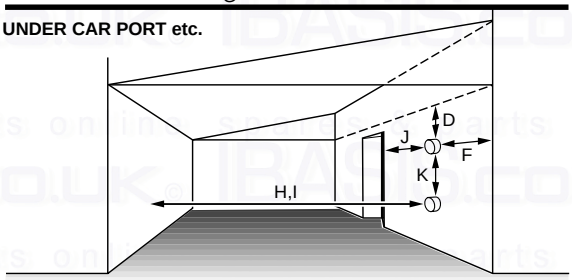

MINUMUM SITING DIMENSIONS FOR FANNED FLUE TERMINALS

	POSITION	MINIMUM SPACING
A	DIRECTLY BELOW AN OPENABLE WINDOW, AIR VENT, OR ANY OTHER VENTILATION OPENING	mm 300
B	BELOW GUTTER, DRAIN/SOIL PIPE	75
C	BELOW EAVES	200
D	BELOW A BALCONY OR CAR PORT	200
E	FROM VERTICAL DRAIN PIPES AND SOIL PIPES	75
F	FROM INTERNAL OR EXTERNAL CORNERS	300
G	ABOVE ADJECENT GROUND OR BALCONY LEVEL	300
H	FROM A SURFACE FACING THE TERMINAL	600
I	FACING TERMINALS	1200
J	FROM OPENING (DOOR/WINDOW) IN CAR PORT INTO DWELLING	1200
K	VERTICAL FROM A TERMINAL	1500
L	HORIZONTALLY FROM A TERMINAL	300

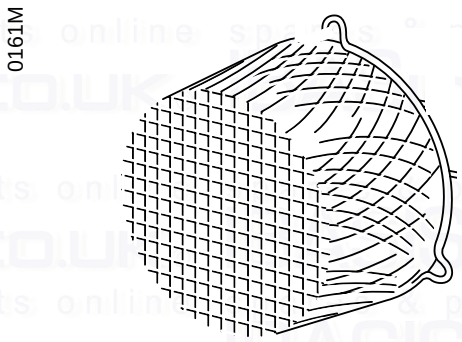

Diagram 4.1

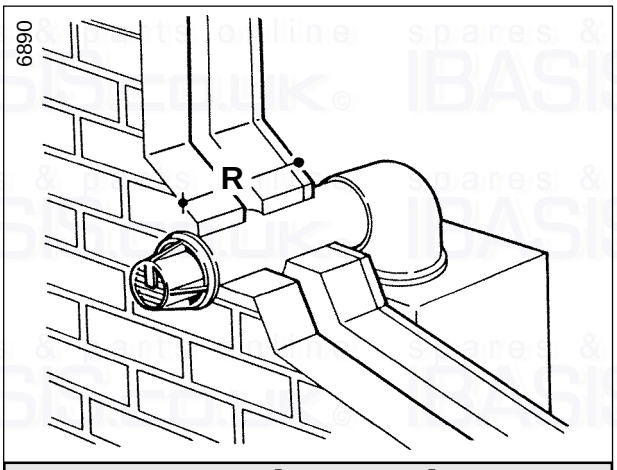

Rear Flue Lengths	
STD FLUE PACK	75 mm to 469 mm
1m FLUE PACK	75 mm to 961 mm
2m FLUE PACK	75 mm to 1961mm
3m FLUE PACK	75 mm to 2941mm

Diagram 4.2

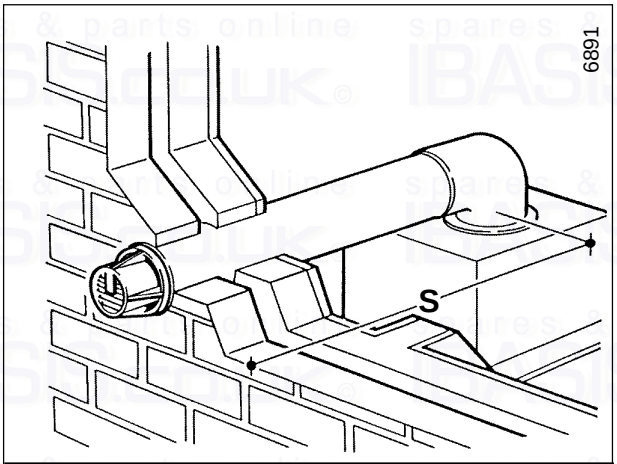

Side Flue Lengths	
STD FLUE PACK	310 mm to 585 mm
1m FLUE PACK	310 mm to 1080 mm
2m FLUE PACK	310 mm to 2080 mm
3m FLUE PACK	310 mm to 3060 mm

Diagram 4.3

4.4 Flue Collar Kit

A flue collar kit, part No.443286 (with instructions) is available.

This can be used to cover the flue, as shown in diagram 4.4

Please note, the use of this collar will mean that the flue lengths will need to be altered, full instructions are given in the kit.

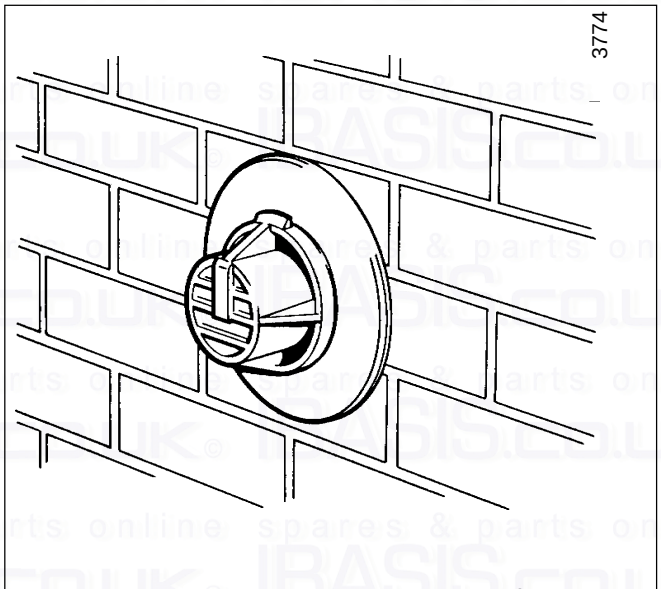

FLUE COLLAR KIT Diagram 4.4

5 Preparation

5.1 Unpacking

Open the carton and check the items supplied against the list on the flap, see diagram 5.1.

Place the boiler on one side, until required.

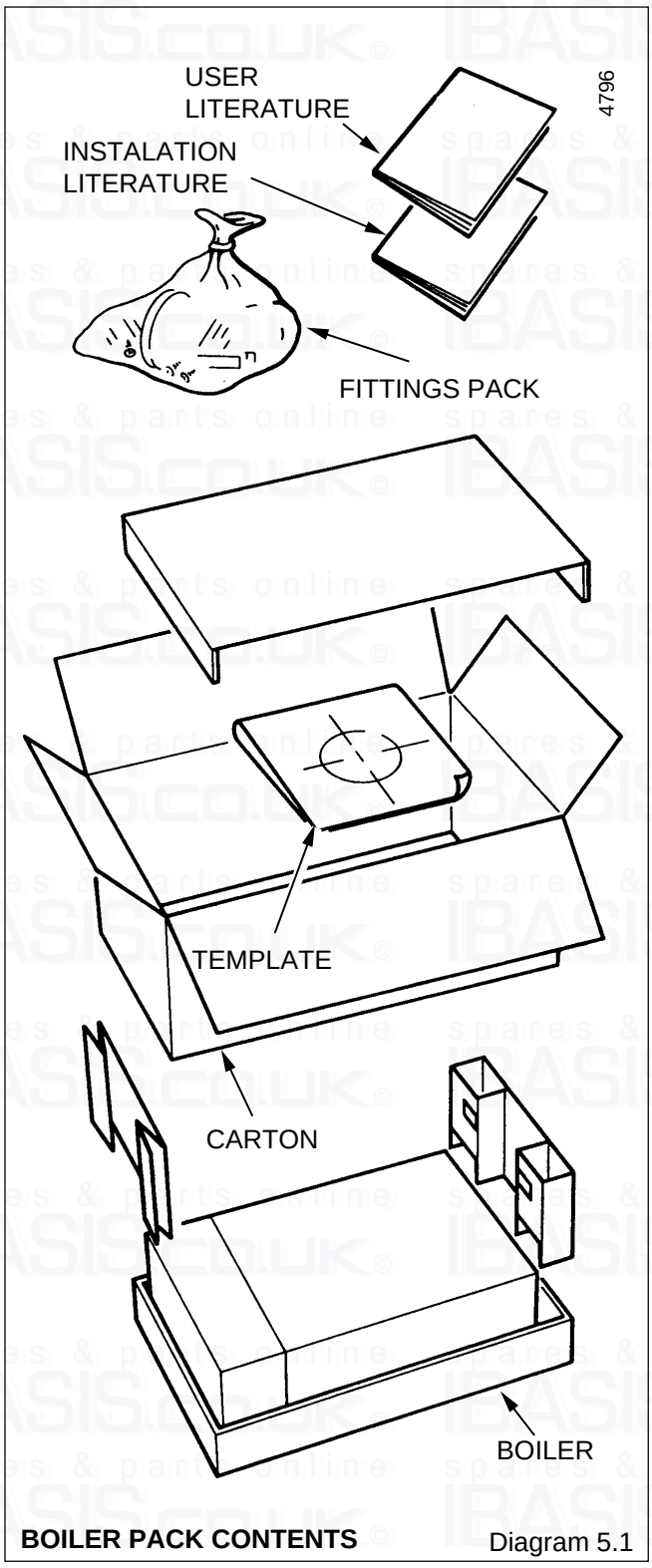

BOILER PACK CONTENTS Diagram 5.1

5.2 Flue Preparation

All flue assemblies are designed for internal installation, given that there is sufficient clearances opposite to the flue exit for installation of the flue and the fixing of side panels.

If there are insufficient clearances the flues can be installed externally from outside.

For a wall thickness up to 300mm, provided there is sufficient space available, the flue can be fully installed from the inside.

For a wall thickness of over 300mm the external cut hole will need to be made good from the outside.

5.3 Rear and Side Flue Application

Select the boiler location and flue application, with due regard to the terminal position:

Take the template from the boiler pack and temporarily position it on the wall, making sure that the minimum clearances are maintained, see diagram 3.1.

Note: The template has “Fixture’s” alignment marks for ease of installation.

For rear flue, mark the position of the flue as diagram 5.3.

For side flue, extend the centre line horizontally left or right to the corner of the adjacent surface where the flue is required to exit to outside. Mark the position of the centre of the flue, as diagram 5.3

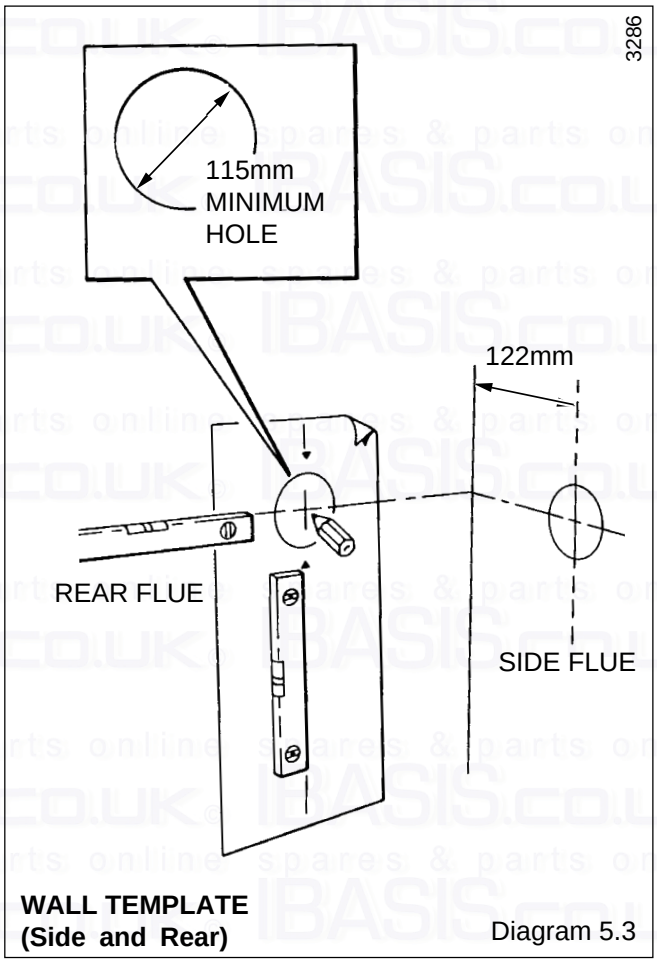

WALL TEMPLATE (Side and Rear) Diagram 5.3

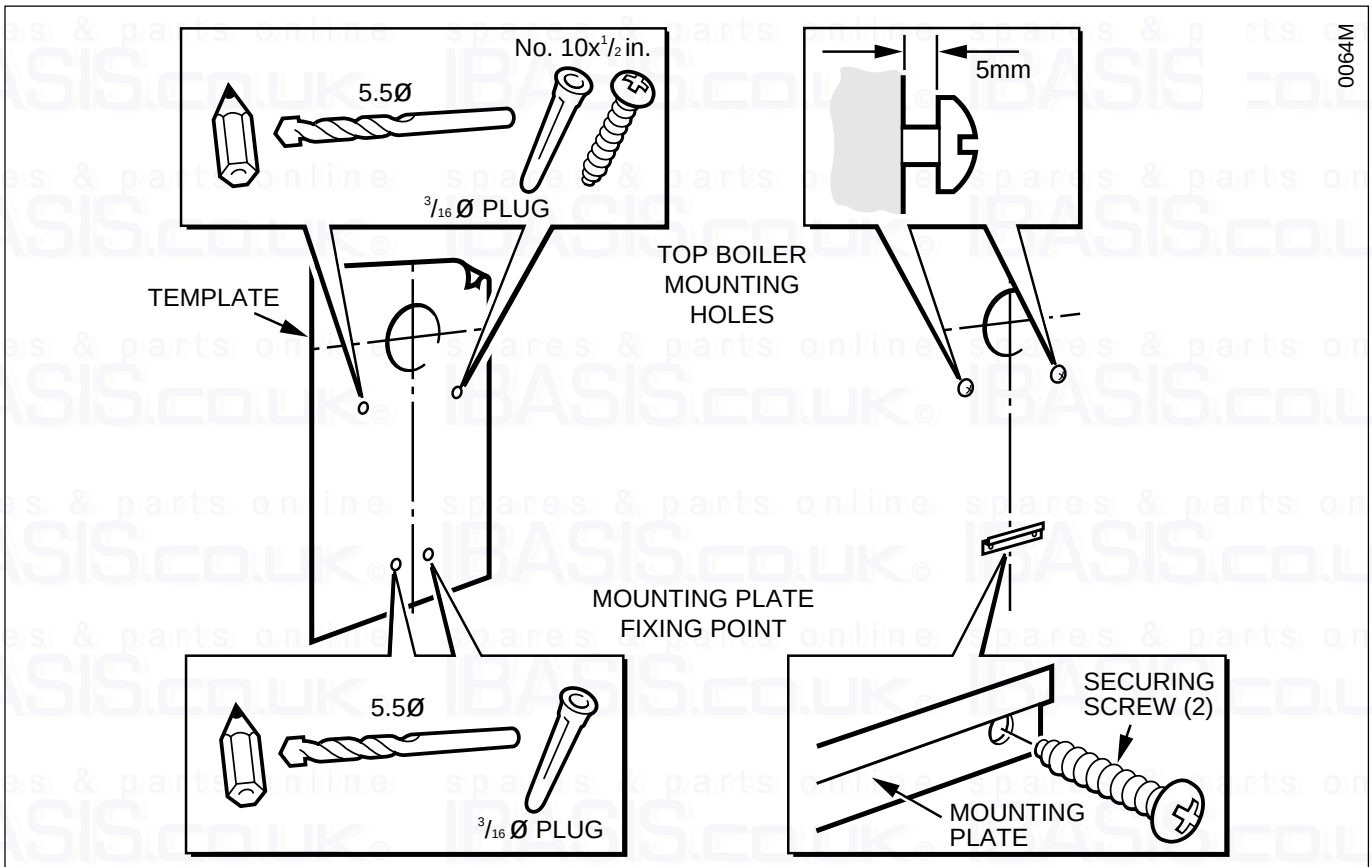

BOILER MOUNTING and PLATE FIXING POINTS Diagram 5.4

5.4 Flue Hole Cutting

Having marked out the flue centre cut a hole for the flue using, preferably, a 115mm minimum core drill.

Note: If required, an optional Wall Liner Kit, part No.900862, is available, complete with fixing instructions.

5.5 Wall Mounting Bracket

Reposition the template, ensuring dimensional alignment with the flue hole.

Mark the boiler securing screws and mounting plate position, see diagram 5.4.

Drill holes and plug, to suit No10x50mm woodscrews, fit the screws allowing sufficient clearance to accept the keyhole fixing brackets.

Secure the boiler mounting plate to the wall with No.10x50 woodscrews and plugs, see diagram 5.4.

5.6 Flue Duct (Standard or Long)

Mark the duct to the length required (this length allows for expansion), see diagram 5.5 for Rear flue and diagram 5.6 for Side flue, then cut square and remove any burrs.

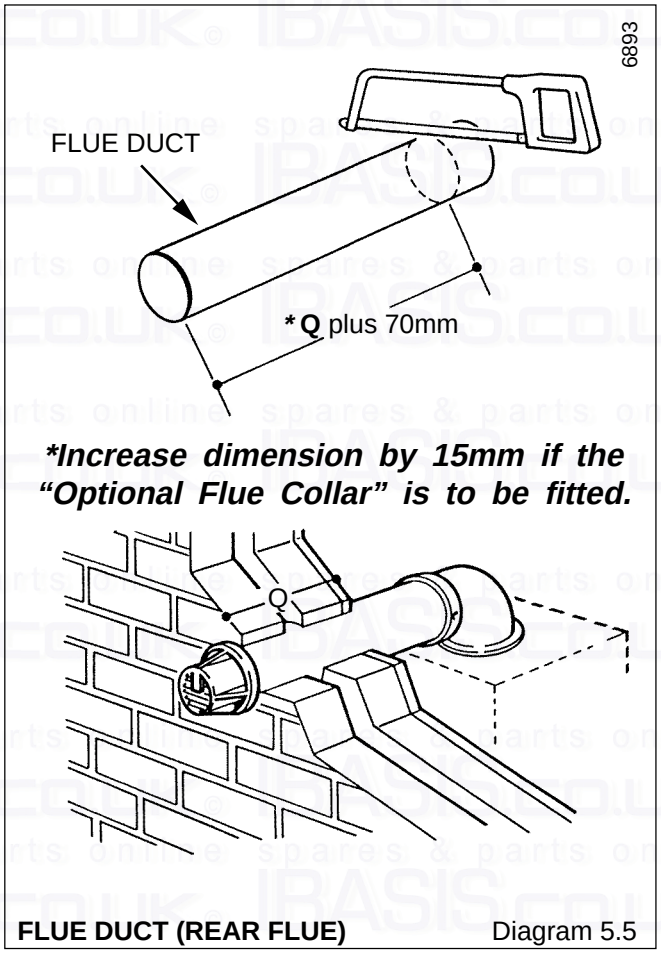

FLUE DUCT (REAR FLUE) Diagram 5.5

5.7 Air Duct/Terminal (Standard or Long)

Mark the duct length, see diagram 5.7 for Rear flue and diagram 5.8 for Side flue, then cut square and remove any burrs.

5.8 Air Duct/Terminal and Flue Duct Assembly

Locate the flue duct into the air duct/terminal, see diagram 5.9.

Fully locate the flue elbow into the air/terminal and flue duct assembly as shown, ensuring correct alignment of the “Top”, see diagram 5.10.

Mark the position of securing holes through the flue elbow outlet, see diagram 5.10.

Drill two 3mm diameter holes, see diagram 5.10.

5.9 External Flue Installation

Remove the flue elbow from the air duct/terminal and flue duct assembly.

Note: Do not insert the flue assembly but place on one side until required.

Continue at “Boiler Preparation”

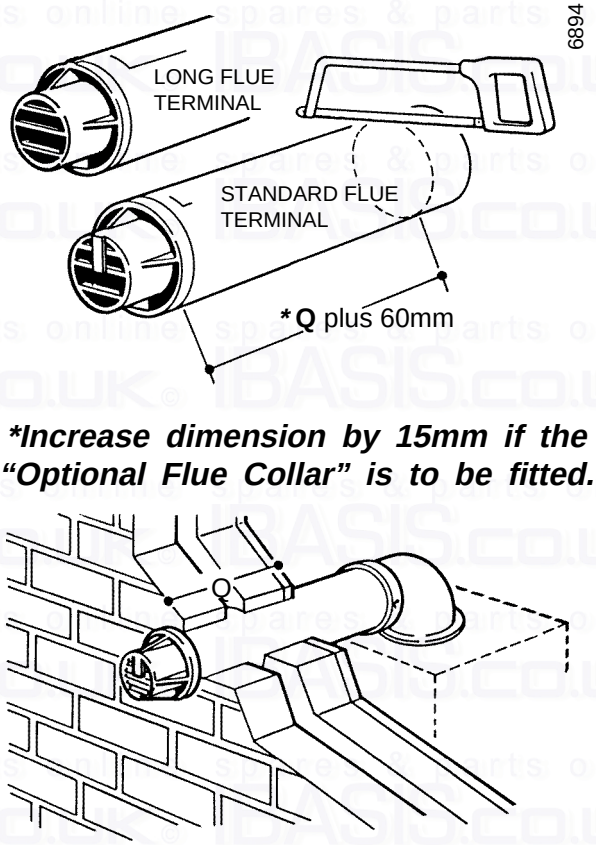

REAR FLUE AIR DUCT / TERMINAL Diagram 5.7

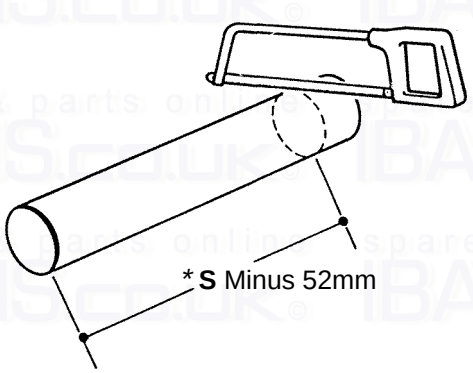

**** S minus 37mm***
(If flue collar is to be fitted overall dimension increased by 15mm)

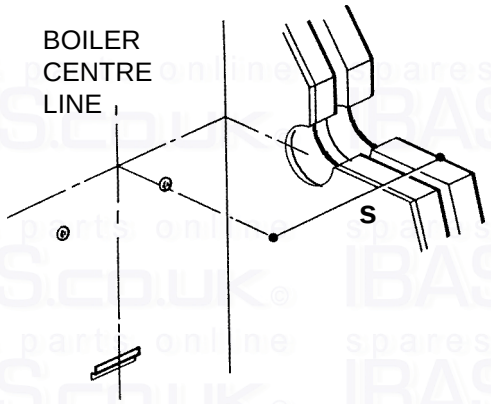

FLUE DUCT (SIDE FLUE) Diagram 5.6

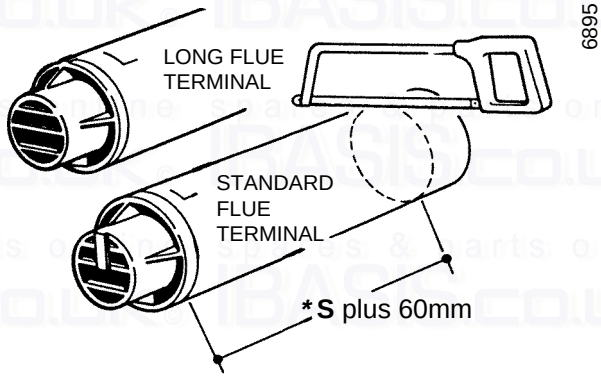

**** S minus 47mm***
(If flue collar is to be fitted overall dimension increased by 15mm)

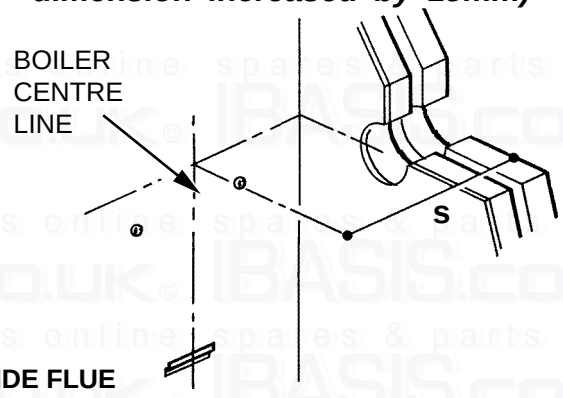

SIDE FLUE AIR DUCT / TERMINAL Diagram 5.8

5.10 Internal Flue Installation

If access to the outside wall is not practical, the flue system can be installed from inside. Use of the optional wall liner kit recommended.

Secure the flue elbow to the air duct/terminal with the two self tapping screws supplied in the fittings pack, see diagram 5.10.

Place the sealing tape from the fittings pack around the flue elbow as diagram 5.10.

Place the flue assembly to one side until required.

Continue at “Boiler Preparation”.

5.11 Wall Liner

If a wall liner is used, fit self adhesive seal as follows:

For wall thicknesses up to 300mm fit the self adhesive seal to the air duct, see diagram 5.11, make sure the joint is on top.

For wall thicknesses over 300mm see diagram 5.12..

When installed the seal will be within the wall.

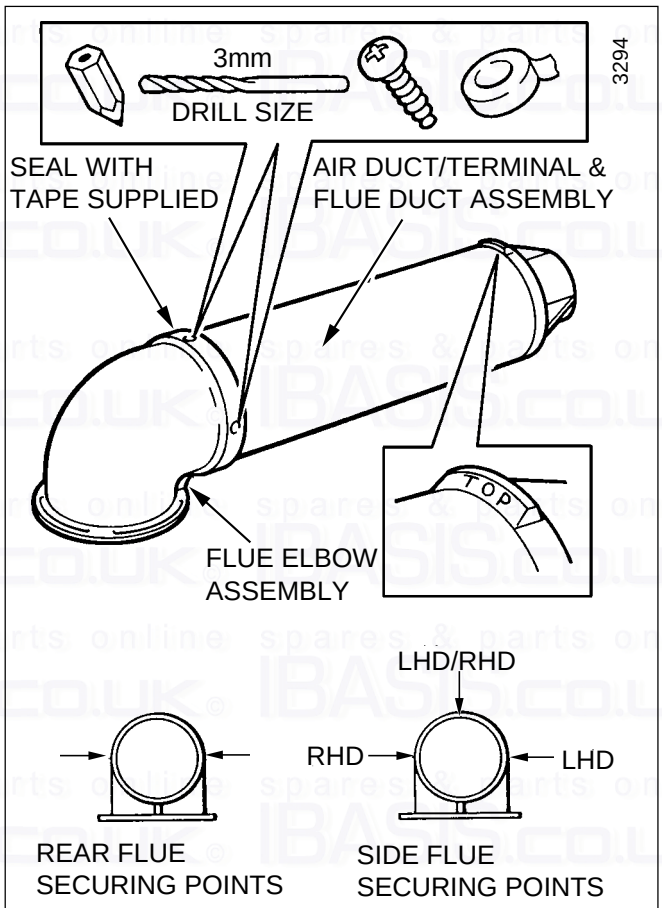

FLUE ELBOW ASSEMBLY Diagram 5.10

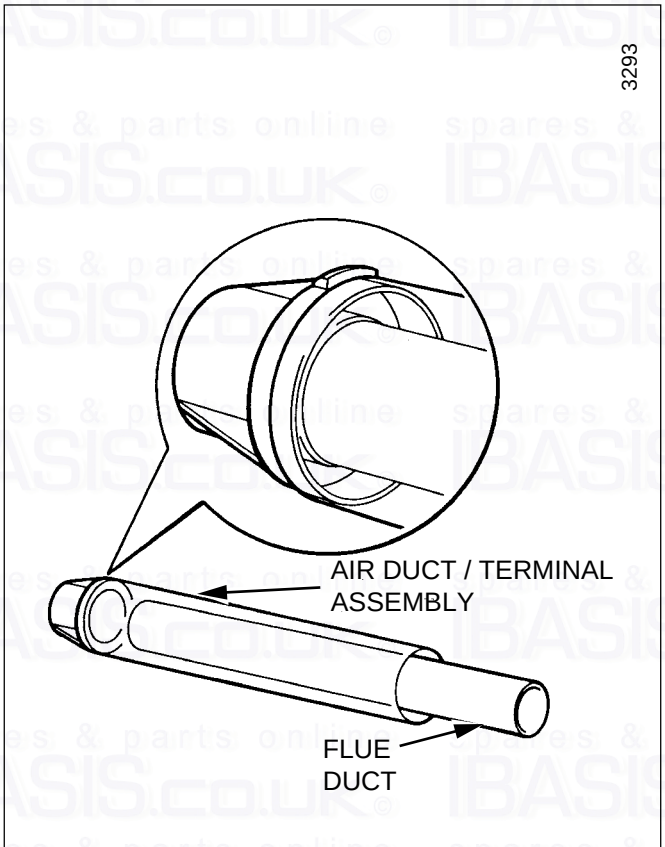

AIR DUCT / TERMINAL ASSEMBLY Diagram 5.9

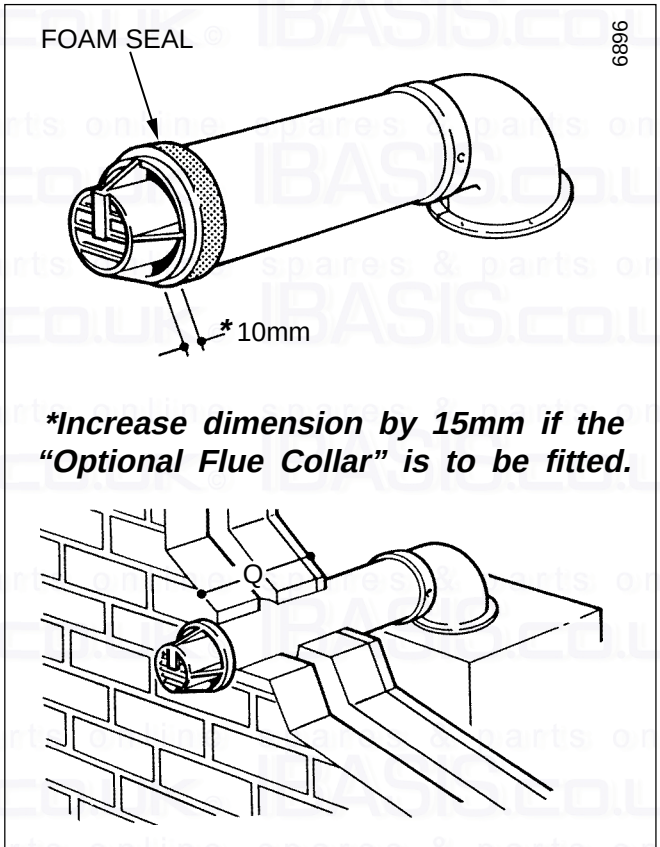

FOAM SEAL (Wall Thickness up to 300mm) Diagram 5.11

5.12 Boiler Preparation

Remove the controls tray and outer case and place on one side until required, see diagram 5.13.

Discard packing piece from between front cover and inner case

Note: If convenient, a connection can be made to the gas service cock at this time.

Lift the boiler into position above the boiler mounting plate, lowering the boiler into position at the same time locating the key hole slots of the boiler on to the securing screws, when located secure the screws, see diagram 5.14.

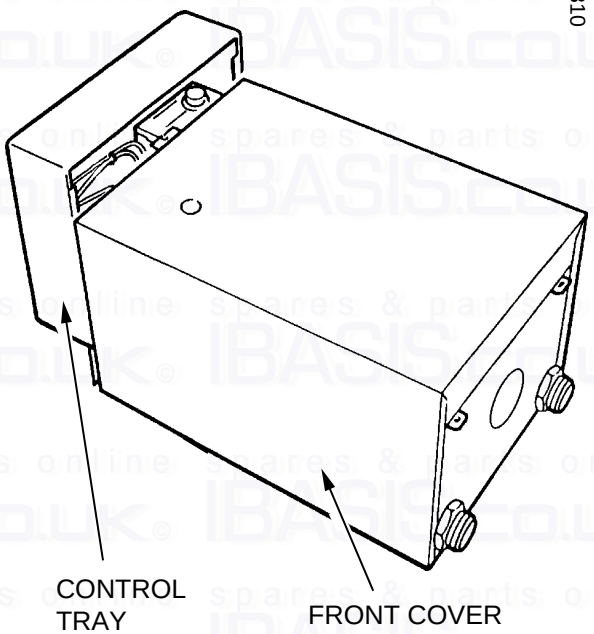

CASE REMOVAL Diagram 5.13

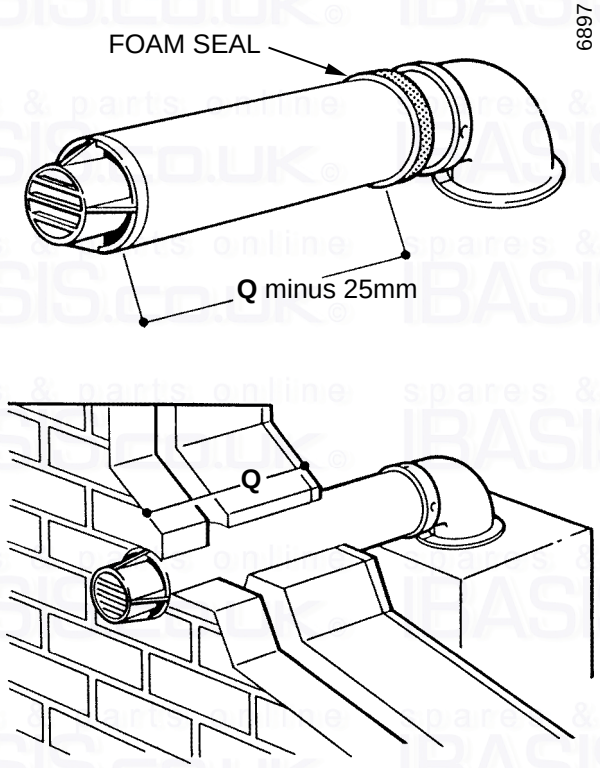

FOAM SEAL
(Wall Thickness over 300mm) Diagram 5.12

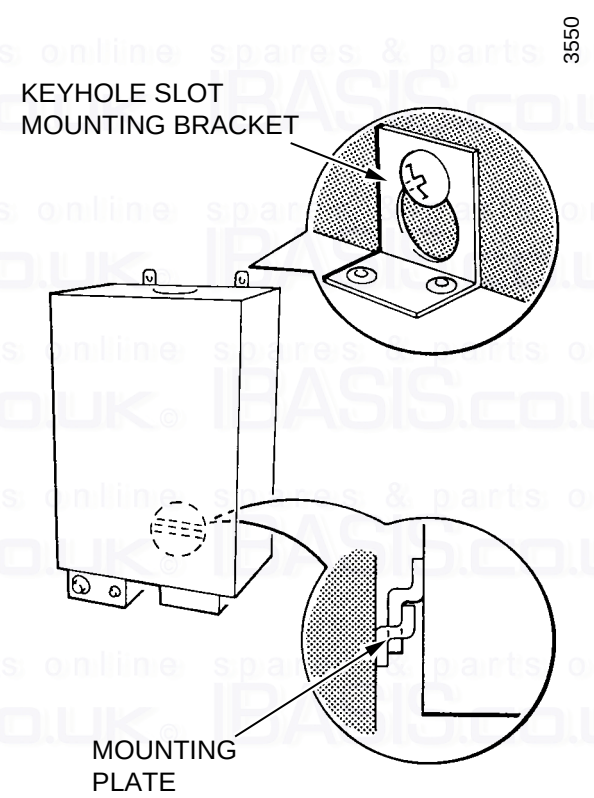

BOILER MOUNTING Diagram 5.14

6 Water Connections

Make the water connection to the heating system, see diagram 6.1.

The boiler has compression connections, with nuts and olives supplied loose in the fittings pack, to accept 28mm outside diameter copper tubing to BS2871.

The right hand connection is the flow from the boiler.

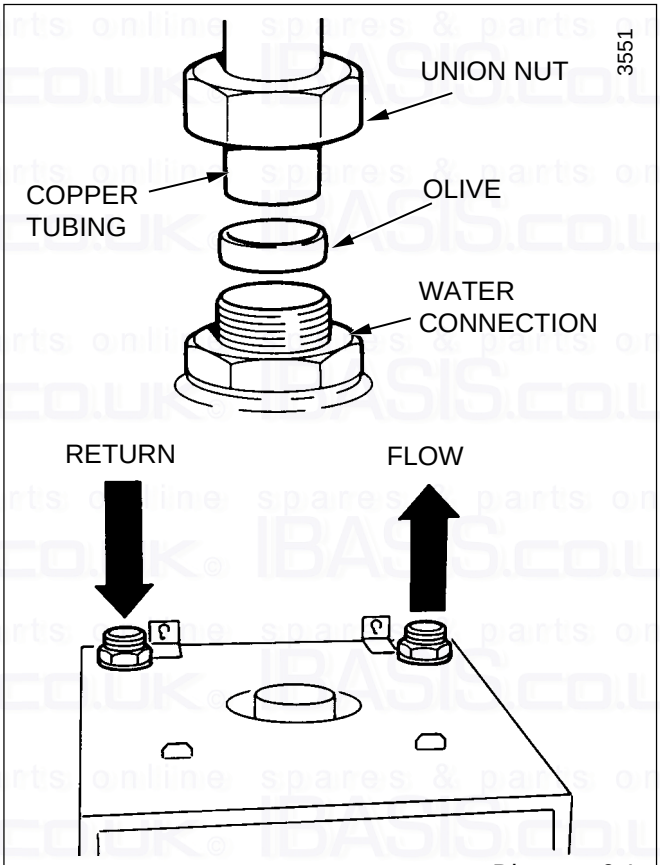

WATER CONNECTION Diagram 6.1

7 Flue Assembly Installation

7.1 Flue Assembly Preparation.

Remove the inner case by releasing the securing screws, place on one side until required, see diagram 7.1.

Remove the violet (or blue) and red electrical connections from the fan see diagram 7.2.

Break the air pressure switch tube(s) connection(s), see diagram 7.2.

Slacken but do not remove the flue hood securing angle wing nuts, see diagram 7.2.

Remove the fan and mounting plate assembly by removing the two securing screws, see diagram 7.2.

7.2 External Flue Installation

Offer the air duct/terminal flue duct assembly into and through the hole and wall.

Secure the flue elbow to the air duct/terminal with the two self tapping screws, supplied in the fittings pack, into the holes previously drilled.

Place the sealing tape from the fittings pack around the flue elbow as diagram 5.11.

Continue at “Flue/Boiler Connection”.

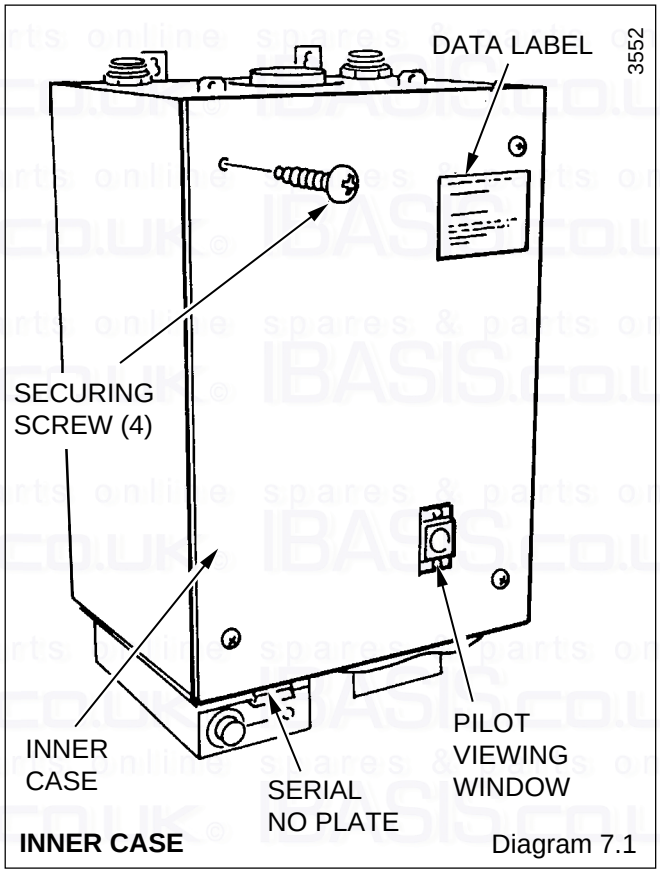

INNER CASE Diagram 7.1

7.3 Internal Flue Installation

Push the flue assembly into and through the wall, see diagram 7.3.

7.4 Flue/Boiler Connection

Secure the flue elbow and gasket to the boiler with the three screws and washers, previously removed, see diagram 7.4.

Replace the fan and mounting plate assembly ensuring engagement of the fan into the flue elbow and the fan retaining bracket, see diagram 7.5 and secure with the two screws previously removed.

Connect the air pressure switch tubes and electrical connections.

Make good around the flue and flue terminal and fit the terminal guard.

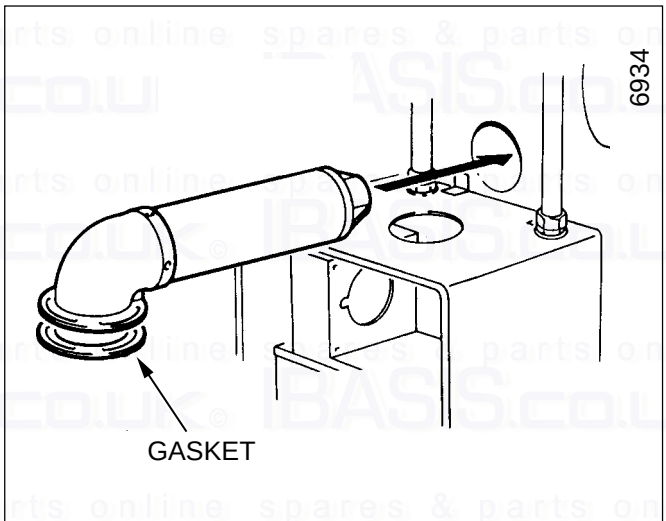

INTERNAL FLUE ASSEMBLY Diagram 7.3

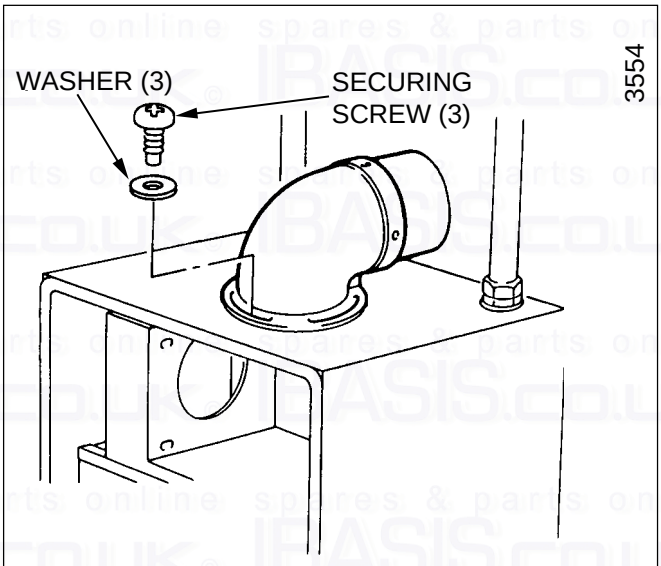

FLUE ASSEMBLY / BOILER CONNECTION Diagram 7.4

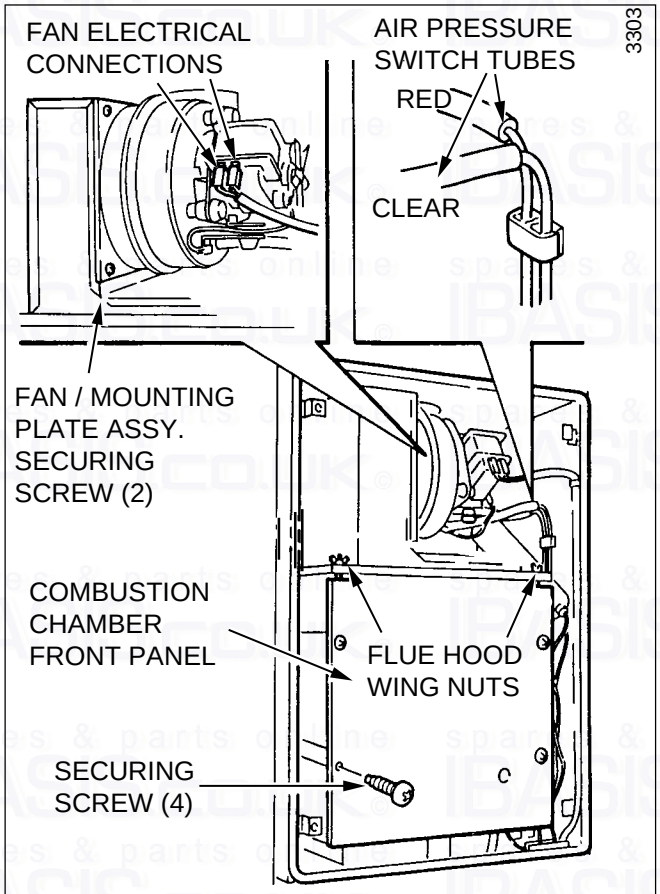

FLUE PREPARATION Diagram 7.2

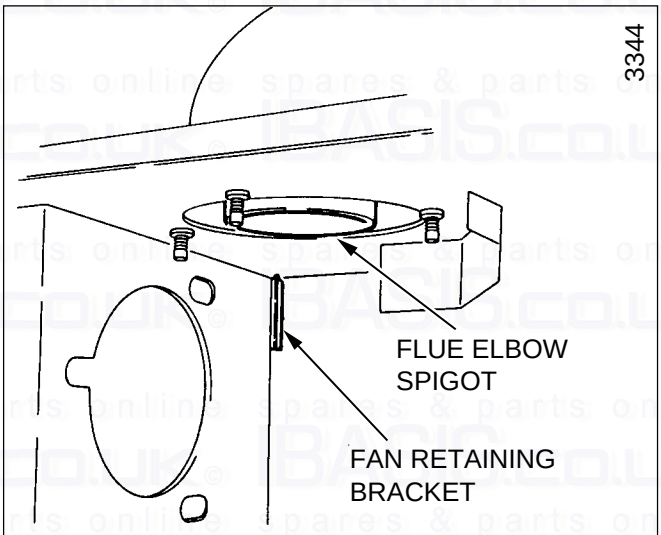

FLUE ELBOW SPIGOT Diagram 7.5

8 Gas Connection

Make the gas connection, refer to diagram 8.1.

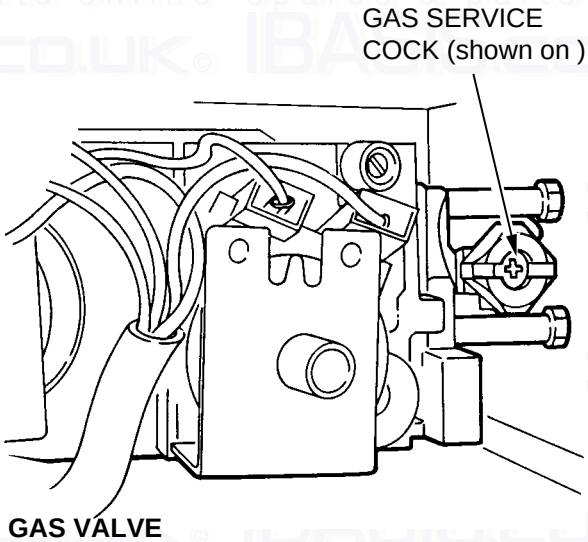

GAS VALVE
(cover removed for clarity) Diagram 8.1

9 Electrical Connection

9.1 Electrical Connection

WARNING. This boiler must be earthed.

Take the two plastic cable retaining clips, from the loose items pack, peel off the backing paper and position them as shown in diagram 9.1.

Remove the control box by supporting it and removing the fixing screw, lower slightly and pull forward to disengage, support the box on the lip bracket at the front, see diagram 9.2.

Take care not to damage any internal wiring and capillaries.

Using heat resistant (85°C) PVC insulated cable of at least 0.75mm^2 (24/0.2mm) to the current issue of BS6500 Table 16, and of a suitable length, thread the cable through the cable clamp secure into the plastic clips and connect to the appropriate terminals, see diagram 9.3 and 13.5.

Standard colours are, brown - live, blue - neutral and Green and Yellow - earth.

The mains cable outer insulation must not be cut back external to the cable clamp, see diagram 9.3.

When making connections, make sure that the earth conductor is made of greater length than the current carrying conductors, so that if the cable is strained the earth conductor would be the last to become disconnected.

CAUTION. It is essential that the polarity is correct.

9.2 Pump Connection

The pump must be connected directly to the control box, as shown in diagram 9.3 and 13.5 threading the cable through the cable clamp in the side of the control box.

9.3 External Controls

Remove the red link between 9 and SL in the control box when using any external controls.

Always make sure that all cables are secured and clear of hot surfaces.

9.3 Testing - Electrical

Checks to ensure electrical safety should be carried out by a competent person.

After installation of the system, preliminary electrical system checks as below should be carried out:

1. Test insulation resistance to earth of mains cables.
2. Test the earth continuity and short circuit of all cables.
3. Test the polarity of the mains.

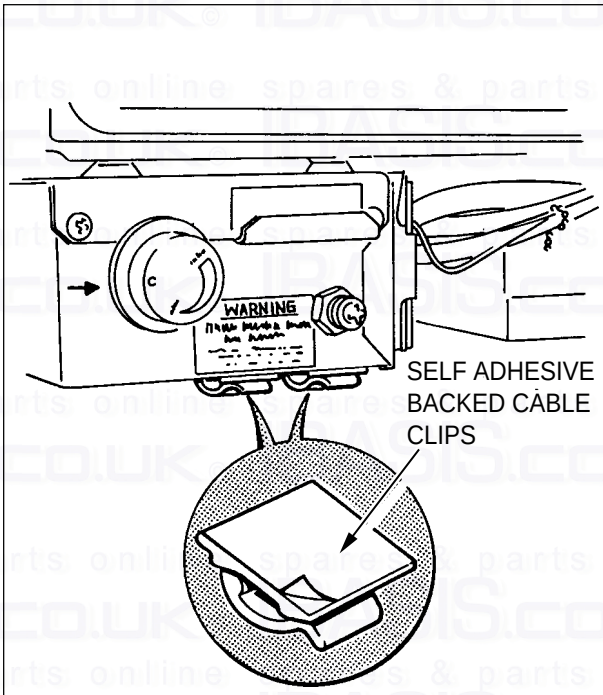

CABLE RETAINING CLIPS Diagram 9.1

9 Electrical Connection

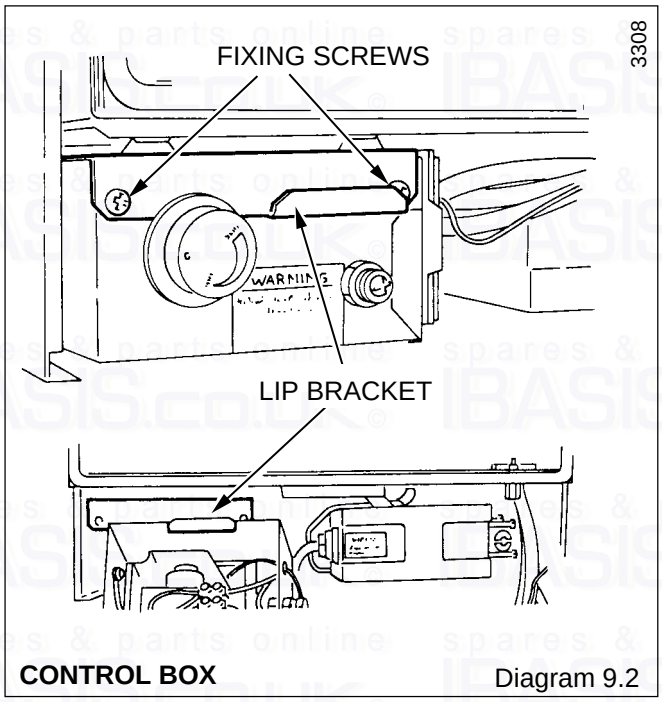

CONTROL BOX Diagram 9.2

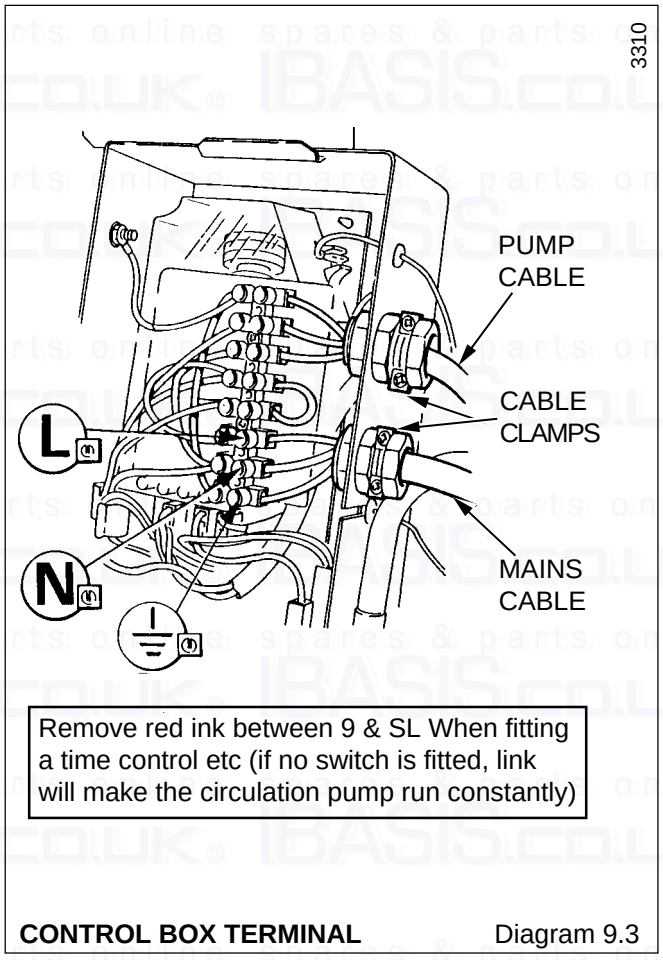

Remove red ink between 9 & SL When fitting a time control etc (if no switch is fitted, link will make the circulation pump run constantly)

CONTROL BOX TERMINAL Diagram 9.3

10 Commissioning

10.1 Preliminaries

The system must be thoroughly flushed out with cold water without the pump in position.

Refit the pump and fill the system, making sure that all the air is properly vented from the system and pump.

10.2 Sealed Systems

Flush the whole system with cold water without the pump in position. Refit the pump and fill until the pressure gauge registers 2.7 bar (40lbf/in^2). Clear any air locks and check for leakage.

Check the operation of the safety valve preferably by allowing the water pressure to rise until the valve lifts. This should be within +/- 0.3bar (+/- 4.3lbf/in^2), of the preset pressure. Where this is not possible a manual check should be carried out.

Release the cold water to initial design pressure.

10.3 Initial Lighting, Testing and Adjustment

Identify the controls by reference to diagram 10.1.

Check that the main electrical supply to the boiler is switched off and that the boiler thermostat is turned to “O”, see diagram 10.1.

Turn on the main gas supply at the gas service cock.

Test the pilot supply tube and its connections for gas soundness as follows: Remove the terminal cover from the gas valve, see diagram 10.1.

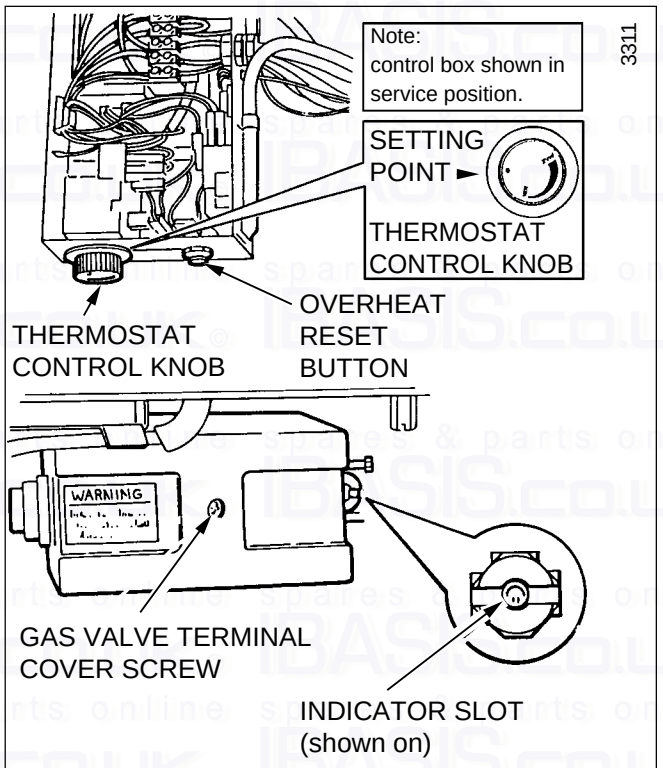

BOILER CONTROLS Diagram 10.1

Temporarily disconnect the black cable from the main solenoid and insulate the connector with tape.

Remove the combustion chamber front panel, securing screws, see diagram 10.2.

Switch on the electrical supply to the boiler and heating system. Make sure that any remote controls are calling for heat.

WARNING. The gas valve, fan and control box operate on mains voltage, terminals will become “Live”.

To complete this test it is necessary to operate the boiler without its inner case, BUT UNDER ALL OTHER CIRCUMSTANCES the inner case must be correctly fitted and sealed.

Turn the boiler thermostat knob fully clockwise and the fan will operate. Sparks will be generated and the pilot burner will light.

Test for gas soundness around the pilot connections using suitable leak detection fluid.

At this time check that the flame lengths are as shown in diagram 10.3.

The pilot gas rate is preset fully open and no adjustment should be necessary, but, if required, turn the pilot burner regulator screw on the gas valve, shown in diagram 10.4 clockwise, to decrease.

Refer to diagram 10.3 for flame length.

Turn the thermostat knob to “O” and isolate the boiler from the electrical supply.

Remove the insulation tape and reconnect the black cable ensuring that the insulating boot is fitted to the main solenoid, see diagram 10.4.

Refit the combustion chamber front panel, secure the fluehood securing angle wing nuts and inner case with the screws previously removed.

For reference attach the self adhesive arrow indicator, from the fittings pack, to the data badge against the rating the boiler is going to be set to.

Loosen the main burner pressure test point screw and fit a suitable pressure gauge, see diagram 10.5.

WARNING. The gas valve, fan and control box operate on MAINS voltage, terminals will become “Live”.

Note: The neon indicator lights on the control board (PCB) are an aid to fault finding.

Make sure that any remote controls are calling for heat.

Switch on the electrical supply to the boiler and heating system.

Turn the boiler thermostat knob fully clockwise to the maximum setting.

The lighting sequence is automatic, as follows:

The fan operates

The spark ignition operates

The pilot solenoid opens

The pilot burner lights

The ignition spark stops,

The main solenoid opens -

and after a short period of time the main burner will light, view through window, see diagram 10.6.

The main burner will remain alight until switched off, either by the boiler thermostat or a remote system control.

When the boiler switches “Off”, both the pilot and main burner go out. The automatic lighting sequence will operate again when heat is required.

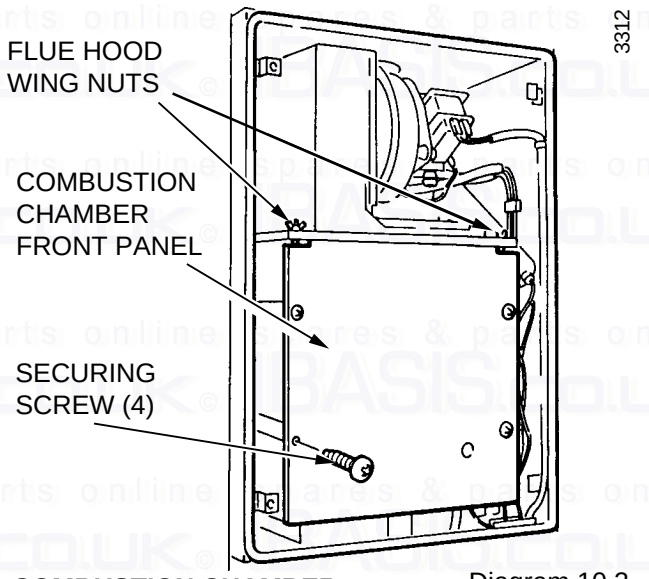

COMBUSTION CHAMBER Diagram 10.2

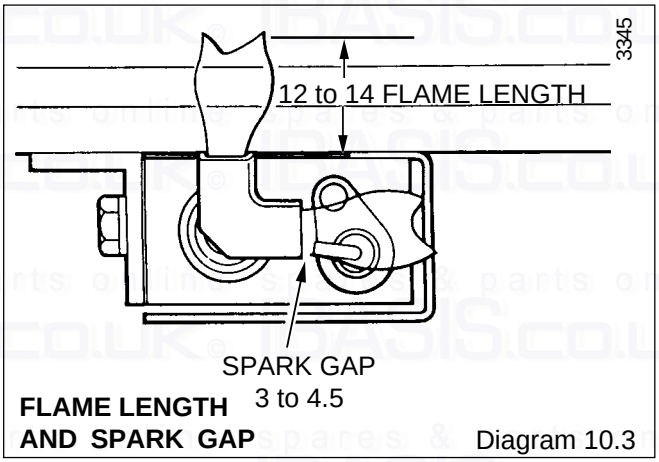

FLAME LENGTH AND SPARK GAP Diagram 10.3

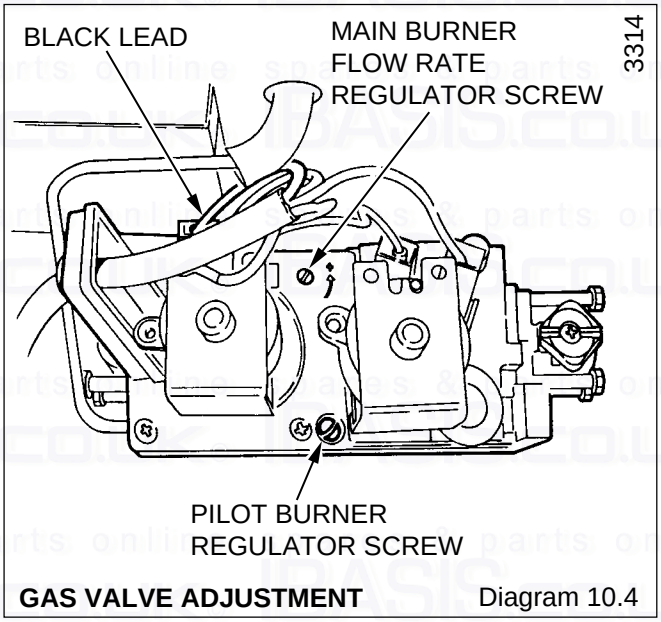

GAS VALVE ADJUSTMENT Diagram 10.4

10.4 Testing - Gas

With the boiler on proceed as follows:

Test for gas soundness around the boiler gas components using a suitable leak detection fluid, in accordance with the current issue of BS6891.

Check the main burner gas pressure at least 10 minutes after the boiler has lit, refer to Data label.

If necessary adjust the main burner flow rate regulator screw to obtain the required gas pressure setting, turn clockwise, to decrease the pressure as shown in diagram 10.4.

Should any doubt exist about the gas rate, check it using the gas meter test dial and a stop watch, at least 10 minutes after the burner has lit, making sure that all other gas burning appliances and pilot lights are off.

The gas rates shown in Table 6 are for guidance only, dependent on the heat setting.

Turn the boiler thermostat knob fully anti-clockwise to “O”. Remove the pressure gauge from the test point and refit the screw, ensuring that a gas tight seal is made.

When the boiler thermostat is turned to the “O” position, by hand, wait at least 30 seconds before turning “On” again.

There may be an initial smell given off from the boiler when new, this is quite normal and it will disappear after a short period of time.

Refit the gas valve terminal cover.

Refit the electrical controls box.

Note: Make sure that the air pressure switch tubes do not kink.

10.5 Heating System

Check that all remote controls are calling for heat.

Turn the boiler thermostat knob fully clockwise to the maximum setting.

Allow the system to reach maximum temperature and examine for water leaks. The boiler should then be turned off and the system drained off as rapidly as possible whilst still hot.

Refill the system, vent and again check for water soundness.

For sealed systems adjust to initial design pressure. The set pointer on the pressure gauge should be set to coincide with the indicating pointer.

The overrun thermostat will keep the pump running when the boiler shuts down, so long as the temperature within the boiler is above a predetermined level.

When commissioning the system the boiler should be fired on full service, that is, central heating and domestic hot water. The system should then be balanced, adjusting the pump and lockshield valve as necessary. Having achieved a satisfactory condition operate the boiler with the bypass fully closed on minimum load, normally this will be central heating with one radiator, in the main living area working. The valve should be gradually opened to achieve the minimum flow rates given in Section 2. This can be checked by measuring the water temperature difference between the boiler flow and return connections. The difference MUST NOT exceed 16°C.

If necessary readjust the pump.

Under NO circumstances should this valve be left in the FULLY CLOSED position.

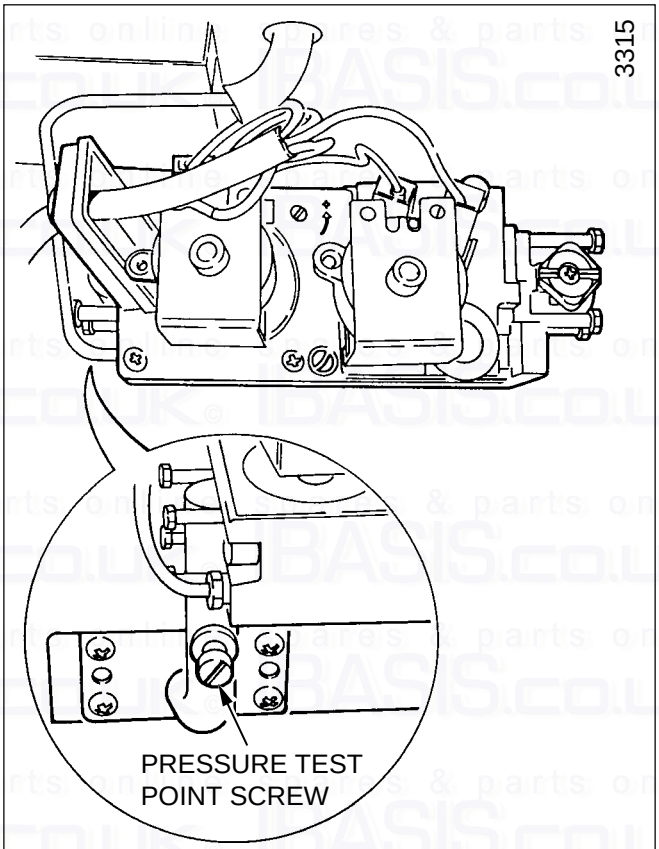

PRESSURE TEST POINT Diagram 10.5

TABLE 6				
APPROX.GAS RATE		**min**	**med**	**max**
ECONOMY	*m³/h*	2.1	2.5	2.8
PLUS 80F	*ft³/h*	76.0	87.5	98.8

10.6 Operational Checks

Adjust the boiler thermostat and any system controls to their required settings.

Do not attempt to adjust the thermostat calibration screw.

Operate the boiler again on full service and check that the balancing is satisfactory, making further adjustments as necessary to the system, radiator valves and bypass.

On open vented systems there must be no pumping over of water or entry of air at the vent above the feed and expansion cistern.

If thermostatic radiator valves are fitted care must be taken to ensure that there is an adequate flow rate through the boiler and bypass when the valves are closed, refer to the current issue of BS7478 for guidance.

Refit the outer case using the screws from the fittings pack, see diagram 10.7.

10 Commissioning

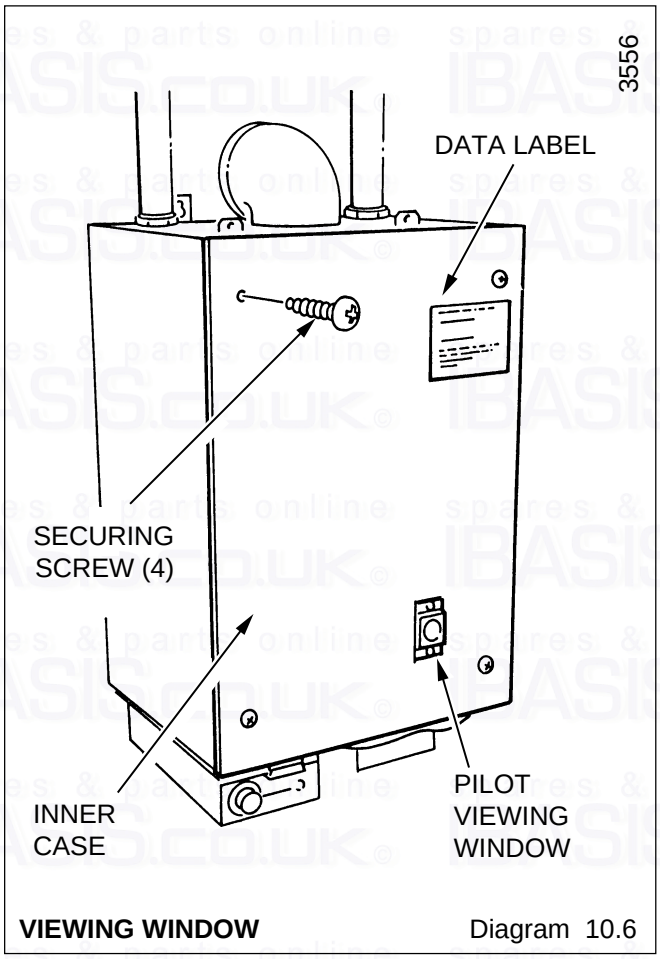

VIEWING WINDOW Diagram 10.6

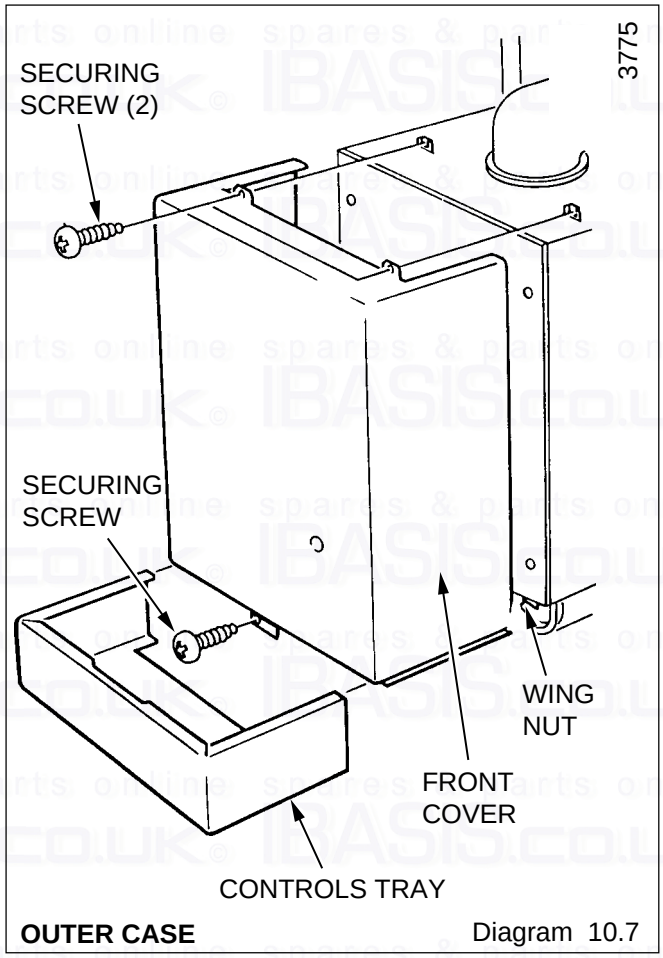

OUTER CASE Diagram 10.7

11 Completion

11.1 User Information

Hand the Instructions for Use to the user for their retention.

Instruct and demonstrate the efficient and safe operation of the boiler, heating system and if fitted, the domestic hot water system.

Refit the controls tray, see diagram 10.7.

Advise the user of the precautions necessary to prevent damage to the system and building in the event of the heating system being out of use during frost and freezing conditions.

Advise the user, that to ensure the continued efficient and safe operation of the boiler it is recommended that it is checked and serviced at regular intervals. The frequency of servicing will depend upon the particular installation conditions and usage, but in general once a year should be enough.

Draw attention, if applicable, to the current issue of the Gas Safety (Installation and Use) Regulations, Section 35, which imposes a duty of care on all persons who let out any property containing a gas appliance.

It is the Law that servicing is carried out by a competent person.

Reminder, leave these instructions with the user.

Notes: To ensure the continued efficient and safe operation of the boiler it is recommended that it is checked and serviced at regular intervals. The frequency of servicing will depend upon the particular installation conditions and usage, but in general once a year should be enough.

It is the Law that any servicing must be carried out by a competent person.

Before starting a service remove the front panel by pulling it forward at the base and lifting off, see diagram 11.4.

As an aid to servicing the air pressure switch tube connection can be used to obtain a products of combustion reading.

Remove the RED tube from the connection on the air pressure switch and insert the analyser probe into the tube.

Turn on gas supply.

Switch on the electrical supply, turn the boiler thermostat fully clockwise and the boiler will operate.

On completion of the test, switch off the electrical and gas supplies and reconnect the red tube to the air pressure switch.

Isolate the boiler from the electrical supply and turn the gas supply off at the gas service cock, see diagram 10.1.

Unless stated otherwise, parts removed for servicing should be replaced in the reverse order to removal.

After completing any servicing of gas carrying components, ALWAYS test for gas soundness and carry out functional check of controls.

12.1 Heat Exchanger Cleaning

Remove the inner case, see diagram 10.6

Disconnect the fan air pressure tubes, electrical connections and remove the fan assembly securing screws and fan, see diagram 7.2.

Remove the fluehood securing angle wing nuts the securing angle and fluehood, see diagram 7.2.

Note: 1. Before refitting the flue hood make sure that it is clean, for example, by washing thoroughly.

2. Remove the combustion chamber front panel, see diagram 7.2.

3. When replacing the combustion chamber front panel, refer to diagram 14.9 and make sure that the sides are in the top location.

4. When refitting the flue hood make sure that it is correctly located under the rear combustion chamber mounting plate return lip.

Disconnect the ignition lead from the electrode, taking care not to damage the lead insulation.

Unscrew the tubing nut at the base of the pilot burner, see diagram 12.1.

Remove the burner support bracket, see diagram 12.1.

To release the pilot burner/electrode assembly remove the pilot burner securing screws and washers and withdraw see diagram 12.1.

Spring the pilot tube downward sufficiently to allow the main burner to move forward to disengage from the injector at the rear. Raise the burner up through the combustion chamber and remove.

Take care not to damage the insulation inside the combustion chamber.

Protect the pilot tube and olive.

Place a sheet of paper in the base of the combustion chamber and clean the heat exchanger thoroughly with a suitable stiff brush.

Do not use a brush with metallic bristles.

Remove the paper and any deposits.

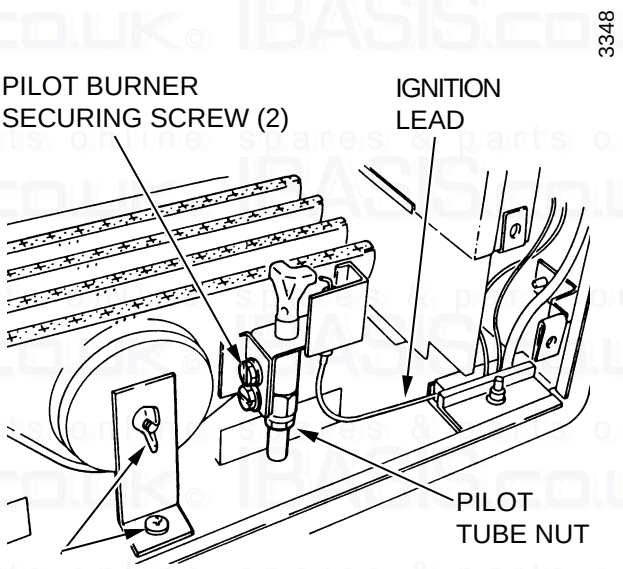

PILOT BURNER ASSEMBLY Diagram 12.1

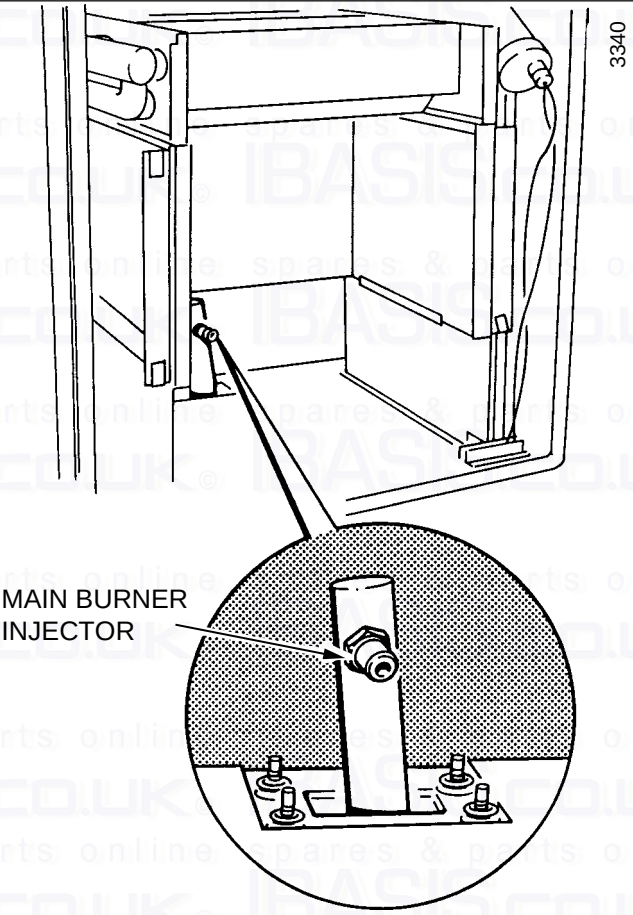

MAIN BURNER INJECTOR Diagram 12.2

12.2 Burner and Injector Cleaning

With the main burner removed, brush off any deposits from the burner, ensuring that the flame ports are unobstructed.

Do not use a brush with metallic bristles.

Check the main burner injector, see diagram 12.2, for blockage or damage and remove if necessary.

Note: make sure that, if removed, the injector is replaced using an approved sealant.

Do not clean the hole in the injector with a wire or a sharp instrument.

Make sure that the main burner is pushed fully home on to the injector.

12.3 Pilot Burner/Electrode and Pilot Injector

Clean the pilot burner and electrode.

When removing and replacing the pilot injector from the pilot burner take care not to damage the electrode, see diagram 12.3, clean the injector by blowing through it.

Check that the spark gap is as shown in diagram 10.3.

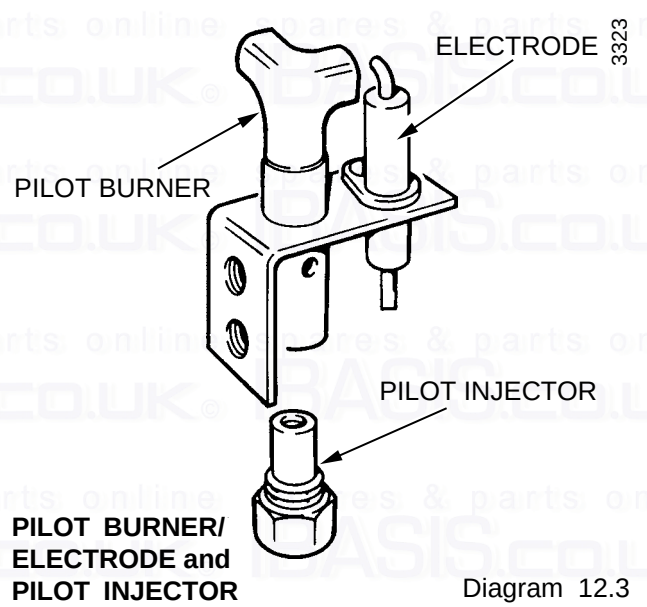

PILOT BURNER/ ELECTRODE and PILOT INJECTOR

Diagram 12.3

12.4 Operational Checks

After completing a service, before fitting the casing, check the inner casing seal to ensure that it is in good condition, renew if necessary.

Light the boiler and carryout the functional checks as described in Section 9 and 10.

13 Fault Finding

Neon Indicators - An Aid to Fault Finding

THE NEON INDICATORS ARE AN AID TO FAULT FINDING ONLY. FAILURE OF ANY OF THE NEON INDICATORS DOES NOT WARRANT THE REPLACEMENT OF AN OTHERWISE SATISFACTORY PRINTED CIRCUIT BOARD (P.C.B).

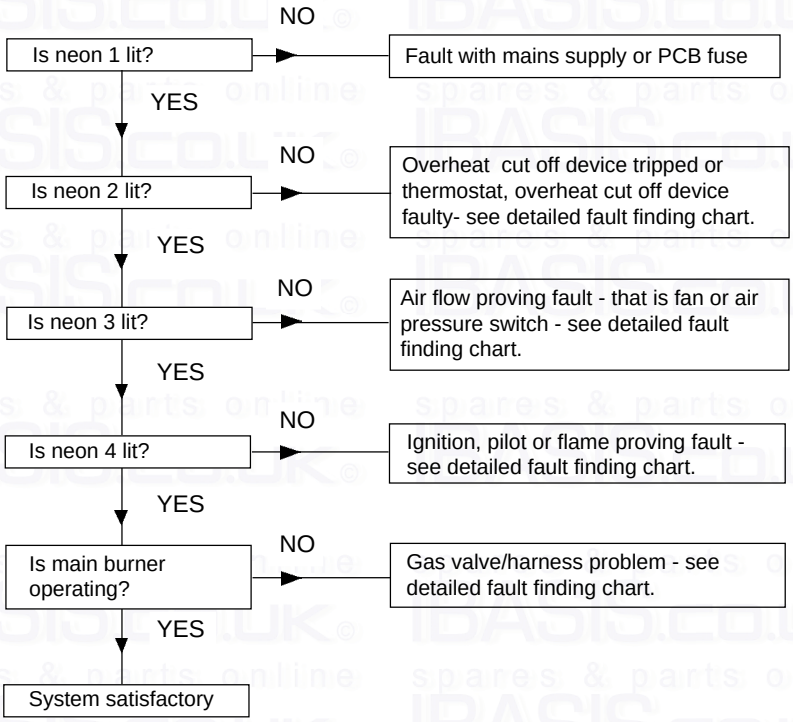

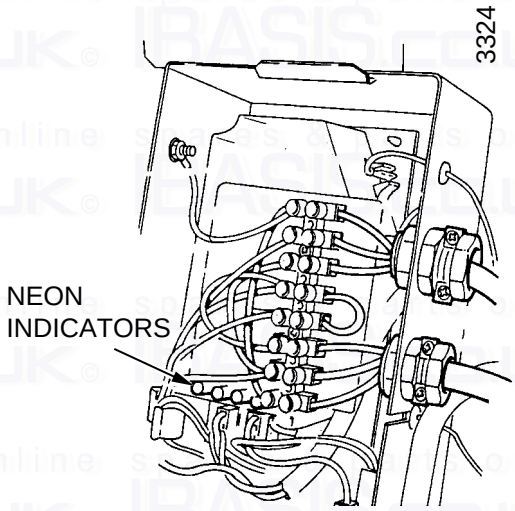

NEON INDICATORS

Diagram 13.1

13.1 Electrical

Important. On completion of the Service/Fault Finding task which has required the breaking and remaking of the electrical connections the earth continuity, polarity, short circuit and resistance to earth checks must be repeated using a suitable multimeter.

Refer to Neon Indicators - “An Aid to Fault Finding” diagram 13.1, Functional Flow diagram 13.2, Boiler Fault Finding diagram 13.3, Pump Overrun Fault Finding diagram 13.4, and Pictorial Wiring diagram 13.5.

13.2 Electrical Supply Failure

Failure of the electrical supply will cause the burner to go out.

Operation will normally resume on restoration of the electrical supply. If the boiler does not relight after an electrical supply failure the overheat device may need resetting.

Remove the controls cover and press the reset button on the control box, see diagram 10.1.

If the cutoff operates at any other time press the reset button and the burner should relight. If the fault persists refer to fault finding chart.

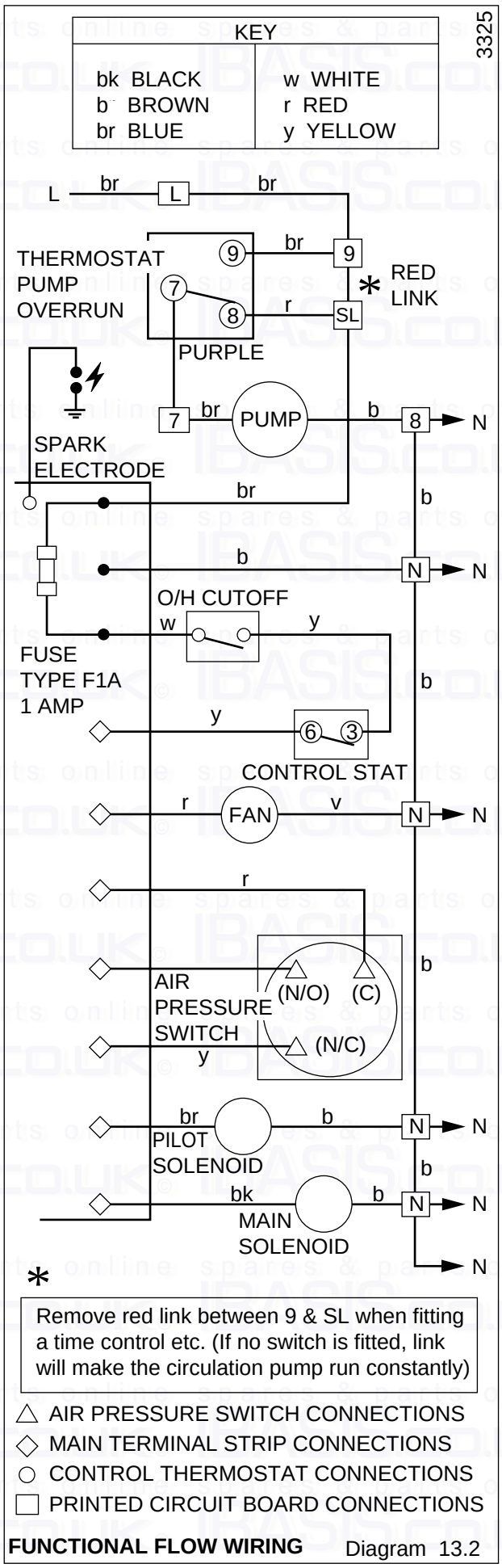

FUNCTIONAL FLOW WIRING Diagram 13.2

13 Fault Finding

Before detailed checking of electrical components ensure that remote controls are calling for heat. Check the gas supply is free of obstructions and purged of air.
Check the overheat cutoff has not operated. Isolate the electrical supply and physically check ALL cables, connections and the printed circuit board fuse. Check the air tubes to the air pressure switch. Switch on the electrical supply and check for correct polarity.
Turn the control thermostat to its maximum setting. Also check fuses.

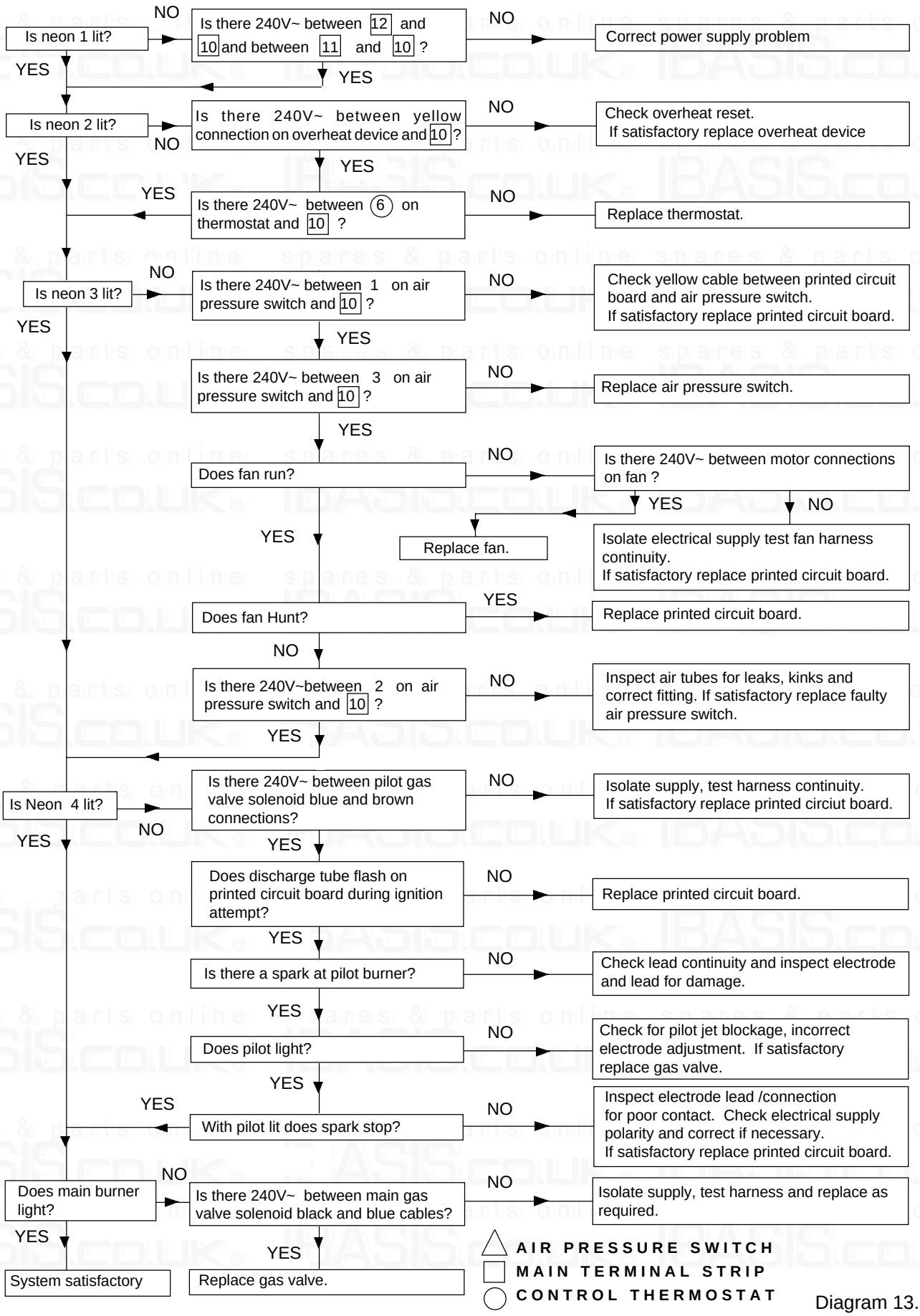

Diagram 13.3

Pump overrun Operation

The Control Thermostat has a pump overrun facility built into it, when the Control Thermostat is set at maximum only, the pump overrun will keep the pump running to allow the boiler to cool down after which it will stop, providing the remote controls are NOT calling for heat.

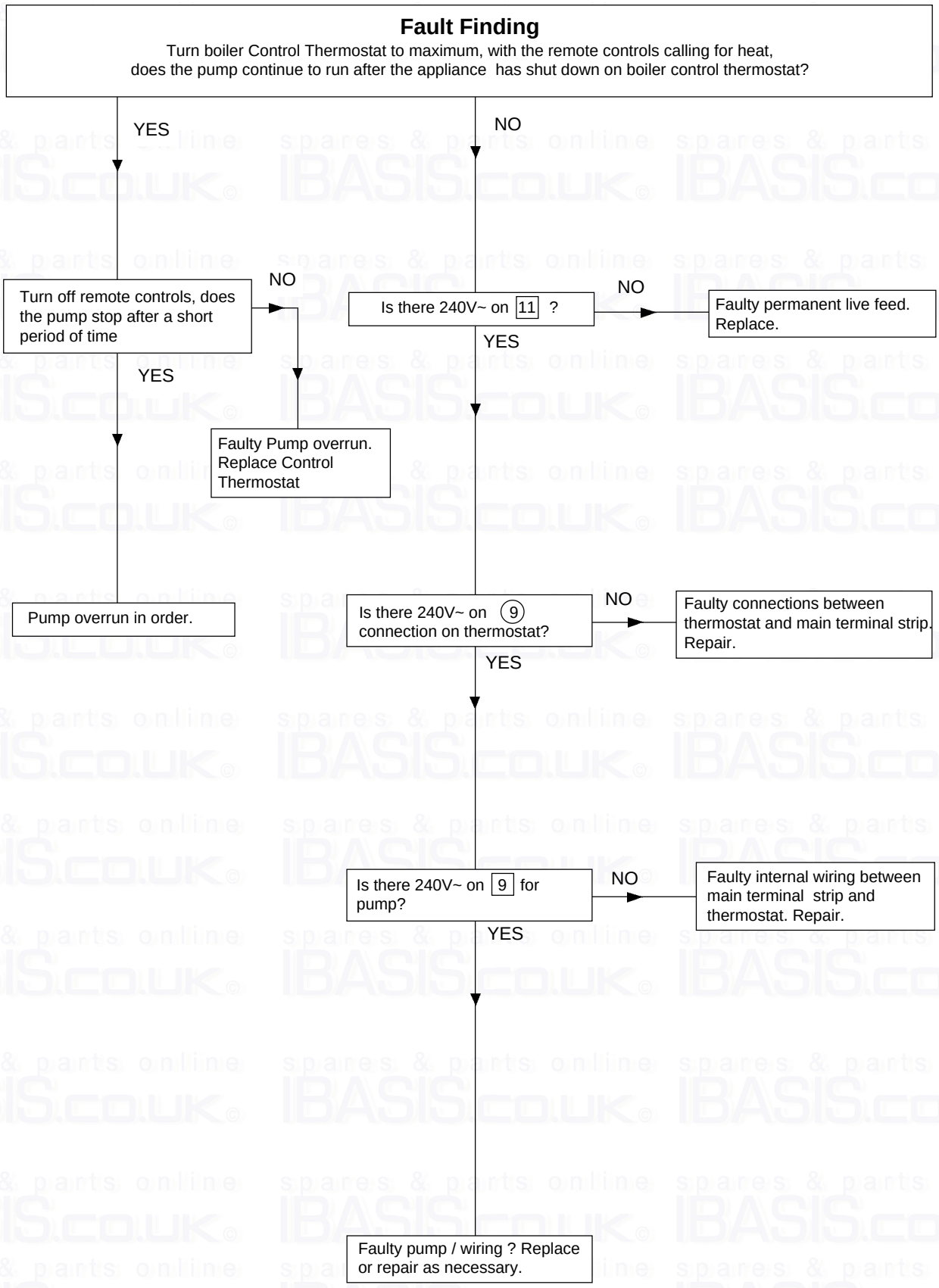

Diagram 13.4

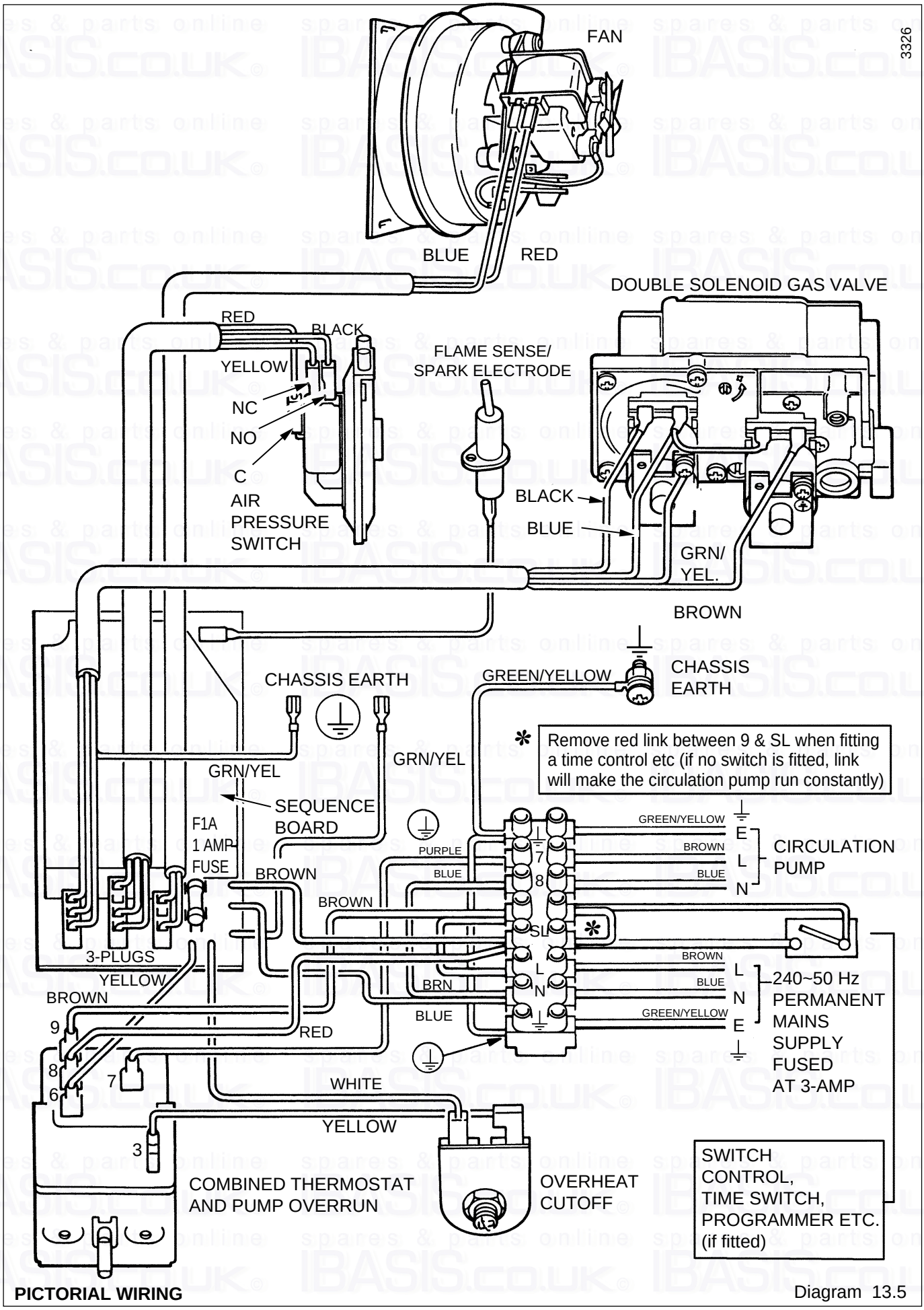

PICTORIAL WIRING Diagram 13.5

Notes

Replacement of parts must be carried out by a competent person.

Before replacing any parts isolate the boiler from the electrical supply and turn the gas supply off at the gas service cock, see diagram 10.1.

Unless stated otherwise, all parts are replaced in the reverse order to removal.

After replacing any parts always test for gas soundness and if necessary carry out functional check of controls.

14.1 Pilot Burner Assembly

Gain access as the servicing section “Heat Exchanger”.

14.2 Electrode Assembly

Gain access as the servicing Section “Heat Exchanger” and “Pilot Burner/Electrode and Pilot Injector”.

Remove the electrode securing screw to release the electrode.

14.3 Ignition Lead

Gain access as the servicing section “Heat Exchanger”.

Remove the control box, refer to Section 9.

Loosen the cable ties, see diagram 14.1.

Pull off the ignition lead at the control board (PCB) and electrode.

Release but do not remove the gland plate securing screw, see diagram 14.1 and pass the lead through and secure as the one removed.

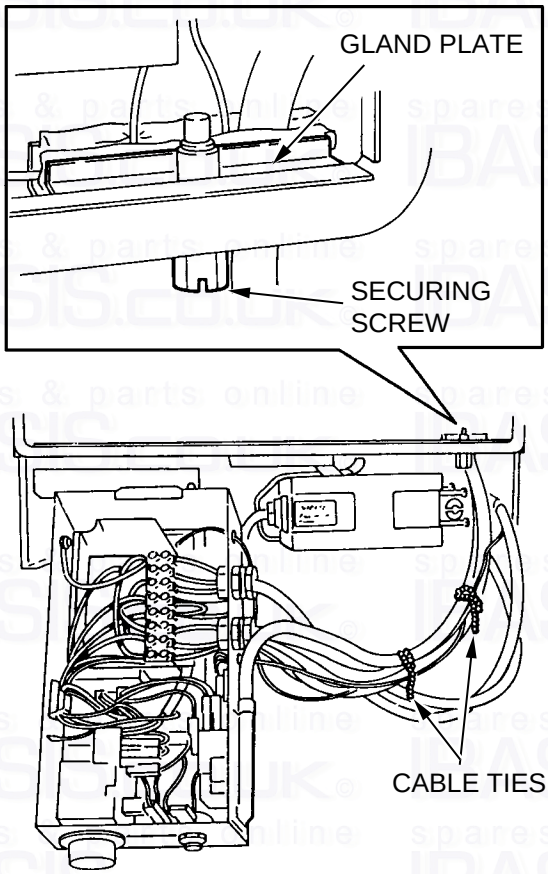

CABLE TIES Diagram 14.1

14.4 Control Board (PCB): Diagram 14.2.

Remove the control box, refer to Section 9.

Disconnect the three electrical plugs and ignition lead.

Release the cables from the plastic retaining clip and disconnect the cables, including the earth connection, from the PCB to the main terminal strip, boiler thermostat and overheat cutoff.

Release the main terminal strip and plastic insulation.

Carefully pull the board away from its supports.

When refitting refer to wiring diagram 13.5.

14.5 Control Thermostat and Overheat Cutoff: Diagram 14.3.

Remove the inner case.

Remove the control box, refer to Section 9.

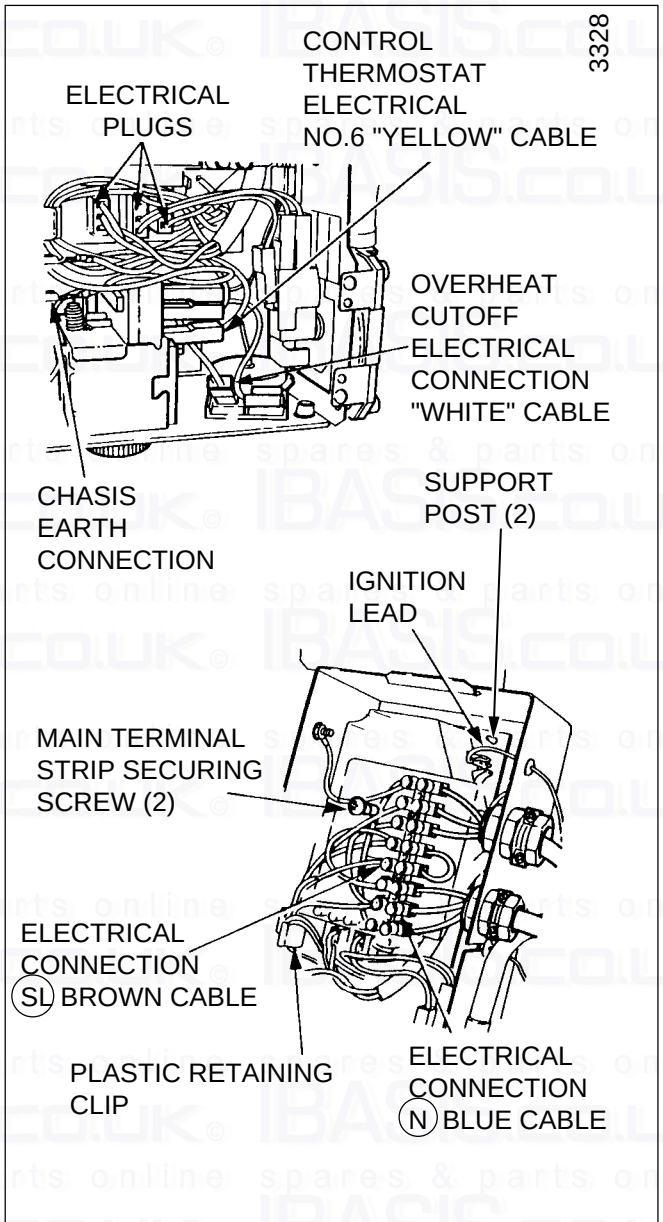

CONTROL BOARD (PCB) Diagram 14.2

14.6 Control Thermostat - diagram 14.3

Pull off the control thermostat knob.

Remove the electrical connections from the thermostat body.

Disconnect the air pressure switch connector plug from the PCB.

Remove the thermostat securing screws.

Release the capillary from the base and plastic retaining clip then remove it from the split grommet.

14.7 Overheat Cutoff - diagram 14.3

Remove the electrical connections.

Disconnect the air pressure switch connect plug from the PCB.

Remove the locking nut from the overheat cutoff.

Release the capillary from the plastic retaining clip then remove it from the split grommet.

14.8 Control Thermostat and Overheat Cutoff Capillaries and Phials - diagram 14.4

Remove the cable ties retaining the capillary(s), see diagram 14.1.

Remove the gland plate.

Remove the split pin and withdraw the two phials from the heat exchanger pocket.

Withdraw the capillary(s) through the boiler casing gland plate.

Note: On replacement the phials should be positioned as illustrated and smeared with the heat sink compound supplied.

Neatly coil any surplus capillary.

14.9 Air Pressure Switch: Diagram 14.5

Remove the control box, refer to Section 9.

Disconnect the air pressure switch tubes.

Disconnect the electrical plug from the PCB, see diagram 14.3.

Remove the two securing screws to release the air pressure switch and cable assembly.

Remove the cables and fit to the replacement air pressure switch.

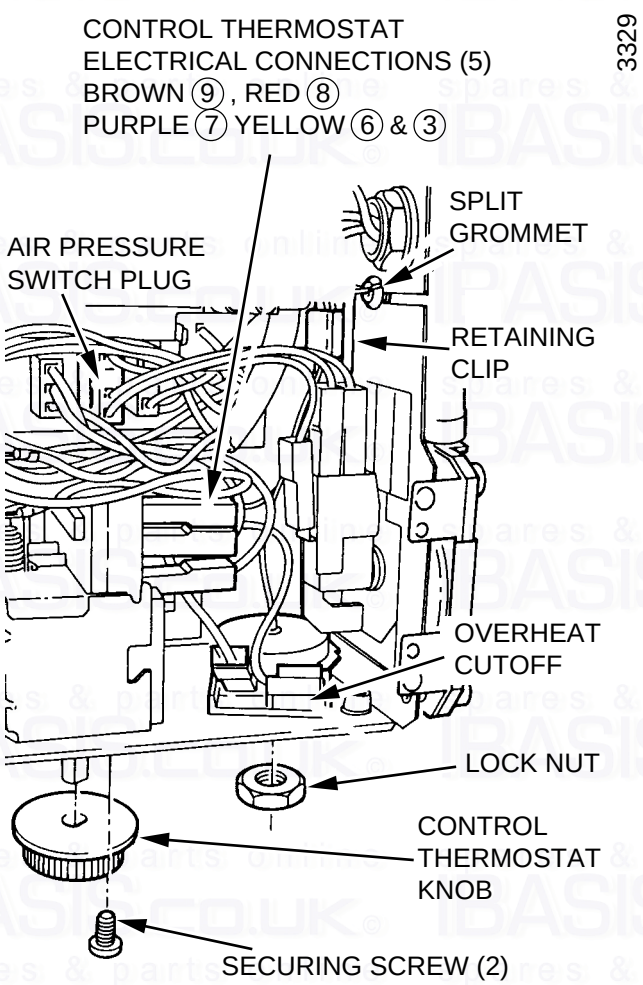

CONTROL THERMOSTAT/ OVERHEAT CUTOFF Diagram 14.3

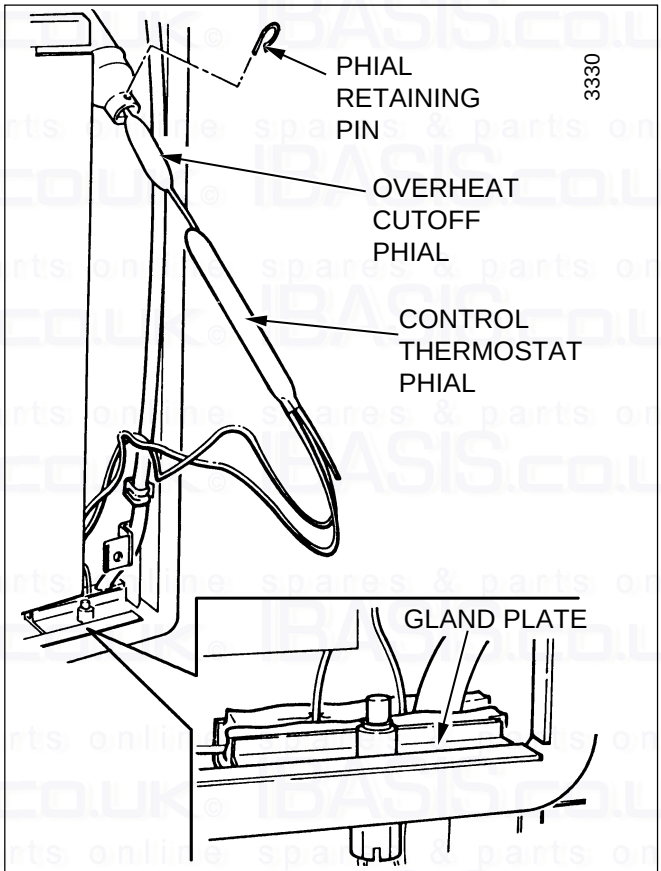

CONTROL THERMOSTAT and OVERHEAT CUTOFF Diagram 14.4

14.10 Gas Valve: Diagram 14.6

Remove the gas valve cover, retaining screw, see diagram 10.1.

Disconnect the electrical connections at the gas valve.

Disconnect the pilot tube nut at the gas valve.

Support the gas valve, remove the four extended screws from the flanged connections at each end of the valve and remove the valve by easing the flanges apart.

Make sure that the new “O” rings are in place in the flanged connections when replacing.

It will be necessary to purge the pipework and valve before relighting and checking the pressure settings, refer to section “Commissioning”.

14.11 Solenoid: Diagram 14.7

Remove the gas valve cover, retaining screw see diagram 10.1.

Disconnect the electrical connections of the solenoid that is to be replaced.

To remove the retaining clip, put a screw driver blade into the hole of the clip, lever off to the left and remove the solenoid.

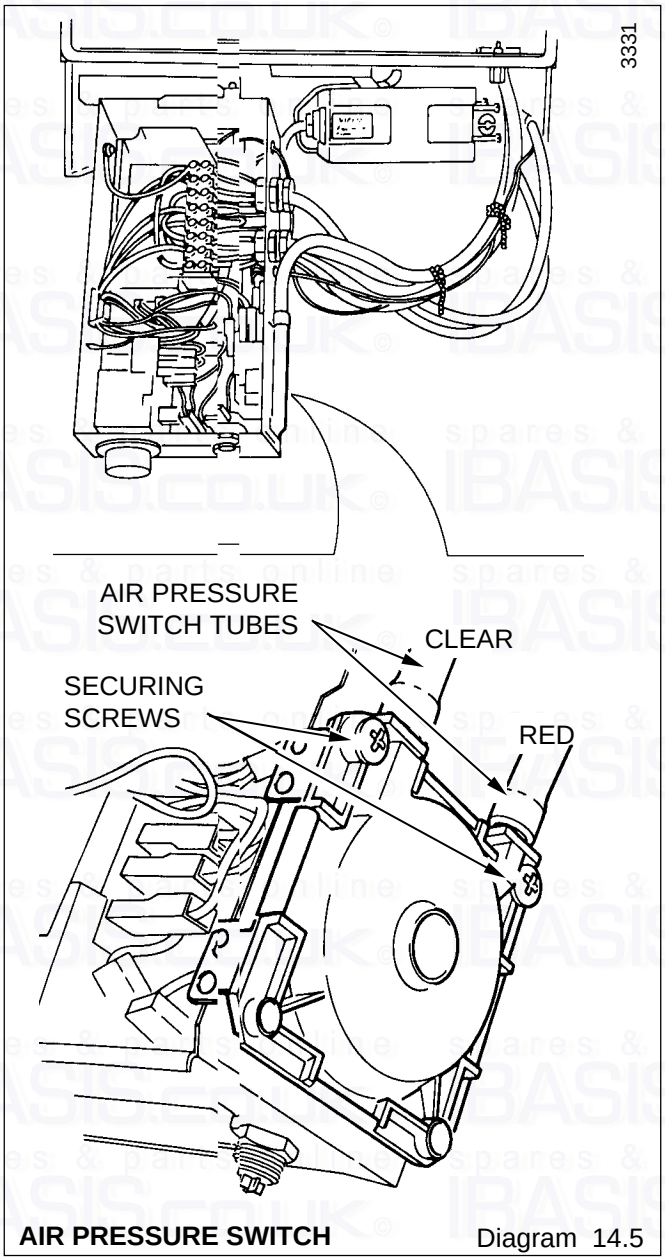

AIR PRESSURE SWITCH Diagram 14.5

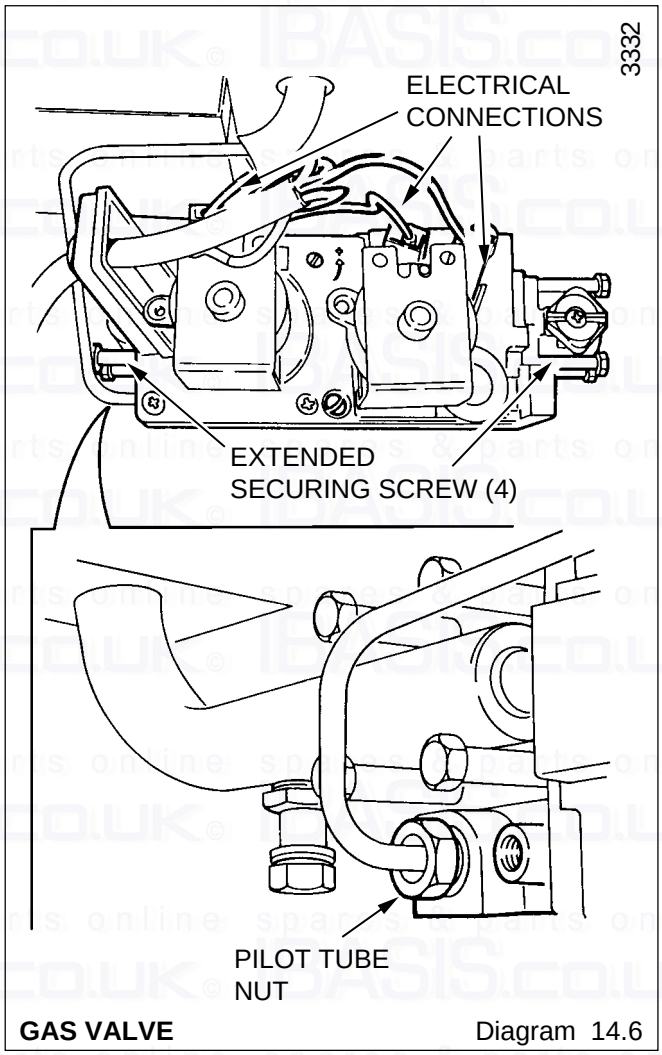

GAS VALVE Diagram 14.6

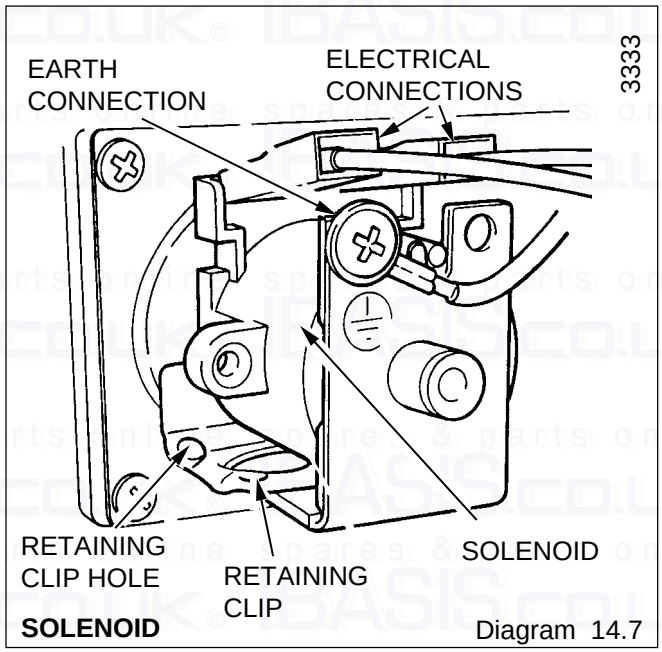

SOLENOID Diagram 14.7

14.12 Fan: Diagram 7.2

Gain access as described in the servicing section for “Heat Exchanger Cleaning”.

Fit new fan.

14.13 Main Burner

Gain access as described in Servicing to remove and replace the burner.

14.14 Main Burner Injector

Gain access as described in the Servicing Section and replace the burner.

14.15 Insulation: Diagram 14.8

Remove the inner case, see diagram 7.1.

Remove the combustion chamber front panel, see diagram 7.2.

Remove the screw securing the front insulation and slide out.

The side insulation panels can be removed by sliding them forward.

Note: To remove the rear insulation panel it is first necessary to remove the burner, refer to Servicing Section “Heat Exchanger Cleaning”.

Pull the rear insulation panel forward off the retaining angle at the bottom, allow the panel to drop, then slide the top of the panel forward.

14.16 Heat Exchanger: Diagram 14.9

Gain access as described in the servicing section for “Heat Exchanger Cleaning”.

Drain the boiler circuit of water.

A drain point is provided for the draining of residual water from the heat exchanger.

Remove the retaining clip and thermostat phials as previously described in this section.

Remove main panel top baffle, see diagram 14.9.

Disconnect the flow and return unions.

Remove the heat exchanger retaining plate, see diagram 14.9.

The heat exchanger can now be removed, on replacement use the new sealing washers provided and ensure the lugs on the combustion chamber locate into the cutouts on the heat exchanger.

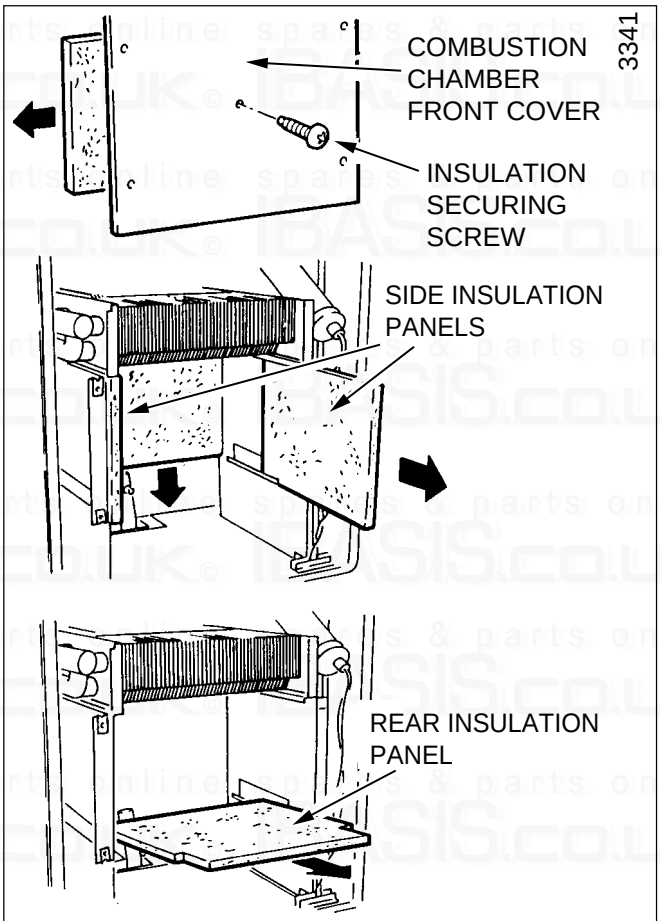

INSULATION Diagram 14.8

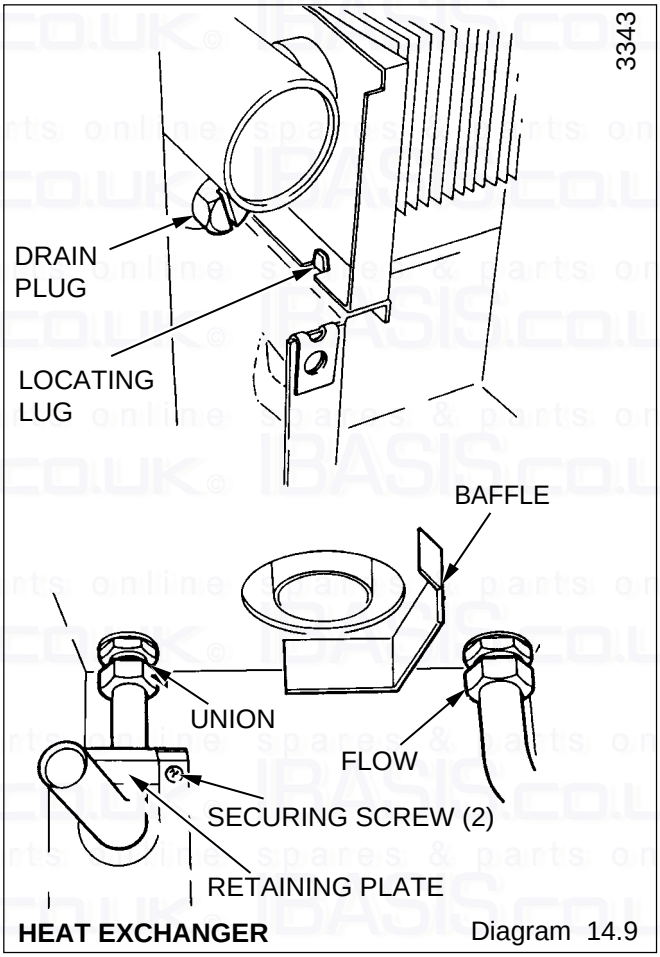

HEAT EXCHANGER Diagram 14.9

14 Replacement of Parts

14.17 Pilot Viewing Window: Diagram 14.10

Remove the two screws and then the viewing window.

Replace the damaged component(s).

When replacing take care not to damage the gasket.

14.18 Inner Case Seal: Diagram 14.10

Remove the inner case.

When removing the seal make sure that all the old adhesive is removed.

When fitting the new seal make sure that it fits correctly and has not buckled.

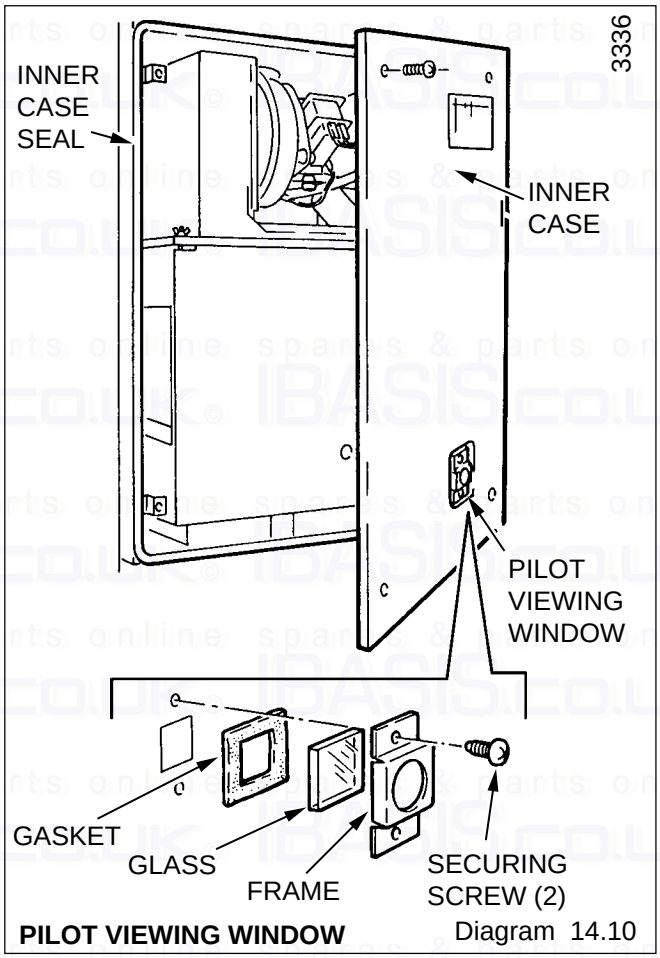

PILOT VIEWING WINDOW Diagram 14.10

15 Spare Parts

15.1 Part Identification

The key number in diagram 15.1 and the list will help to identify the part.

15.2 Ordering

When ordering any spare part please quote the part number and description from the list together with the model name and serial number of the appliance, located on the “Data label” refer Section 1.5.

If ordering from British Gas also quote the GC number of the appliance and part.

Key No	Part No.	Description	GC Number
1	417517	Gas control assembly	334 702
2	230367	Injector - 80F	313 611
3	230357	Air pressure switch	313 604
4	230209	Pilot burner/electrode assembly	387 980
5	WW4607	Ignition lead	136 824
6	800271	Thermostat - control	313 605
7	800272	Thermostat - overheat cutoff	313 606
8	800276	Fan assembly	313 612
9	800275	Thermostat knob assembly	313 609
10	202015	Fuse	334 750
11	208302	Sight glass	312 419
12	900817	Control board (PCB)	313 301

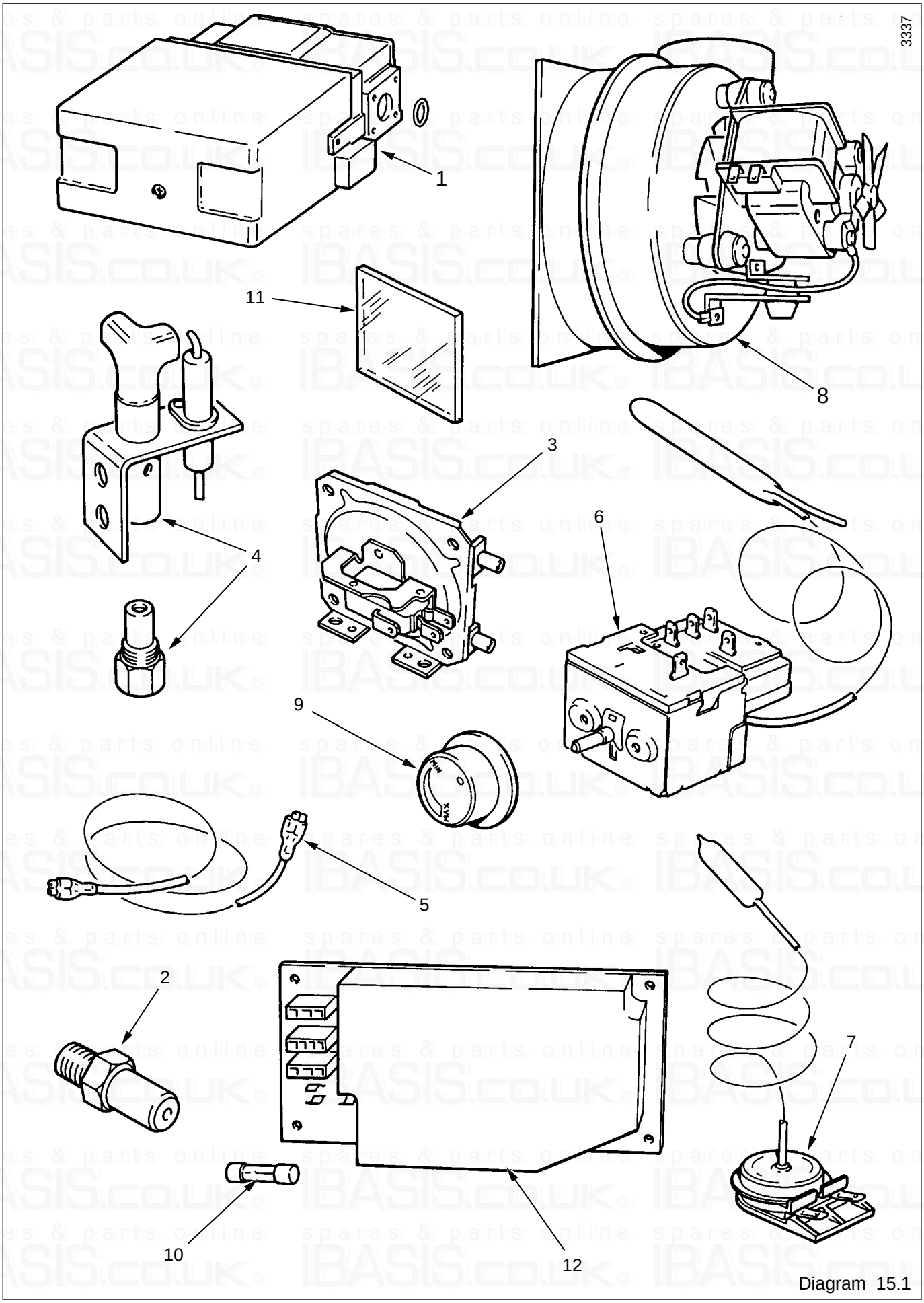

Diagram 15.1

Because of our constant endeavour for improvement details may vary slightly from those in the instructions.