220719A.05.95

Glow-worm

Instructions for Use

To be left with the user

Energysaver 30

HIGH EFFICIENCY

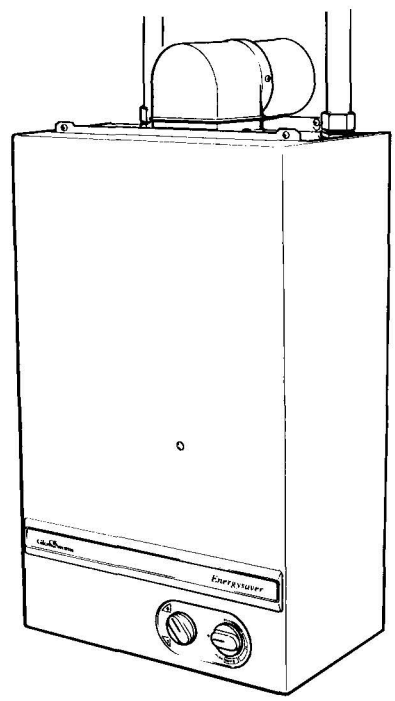

PAS 010

This is a Cat I $_{2H}$ appliance

Reference in these instructions to British Standards and Statutory Regulations/Requirements apply only to the United Kingdom.

For Ireland the rules in force must be used.

The instructions consist of two parts, Installation and Servicing Instruction and Instructions for Use. They are the property of the user and must be handed to them on completion of the installation.

Guarantee Registration

Attached to the back of these instructions is your Guarantee Registration Card, which we recommend you complete and return as soon as possible.

If this card is missing you can obtain a copy or record your registration by telephoning Heatcall (Glow-worms own service organisation) telephone number 01773 828100.

Introduction

These instructions should be read and carefully followed for the safe and economical use of your boiler.

This boiler is designed to provided central heating from a fully pumped open vented or sealed water system with a fully indirect cylinder.

The boiler is fully automatic in operation, having two user controls on the left the "ON/OFF" control switch knob and on the right the control thermostat knob, see diagram 1.

Important Notice

This boiler is for use on natural gas (G20) as distributed in the United Kingdom and Ireland and cannot be used on any other gas.

Gas Safety (Installation and Use) Regulations

In your interest and that of gas safety it is the Law that ALL gas appliances are installed by a competent person in accordance with the current issue of the above regulations.

HEATCALL
One Contact Total Service
Customer Services:
Tel: (01773) 828100
Fax: (01773) 828070

Hepworth Heating Ltd.,
Nottingham Road, Belper, Derbyshire. DE56 1JT
General/Sales enquiries :
Tel: (01773) 824141 Fax: (01773) 820569

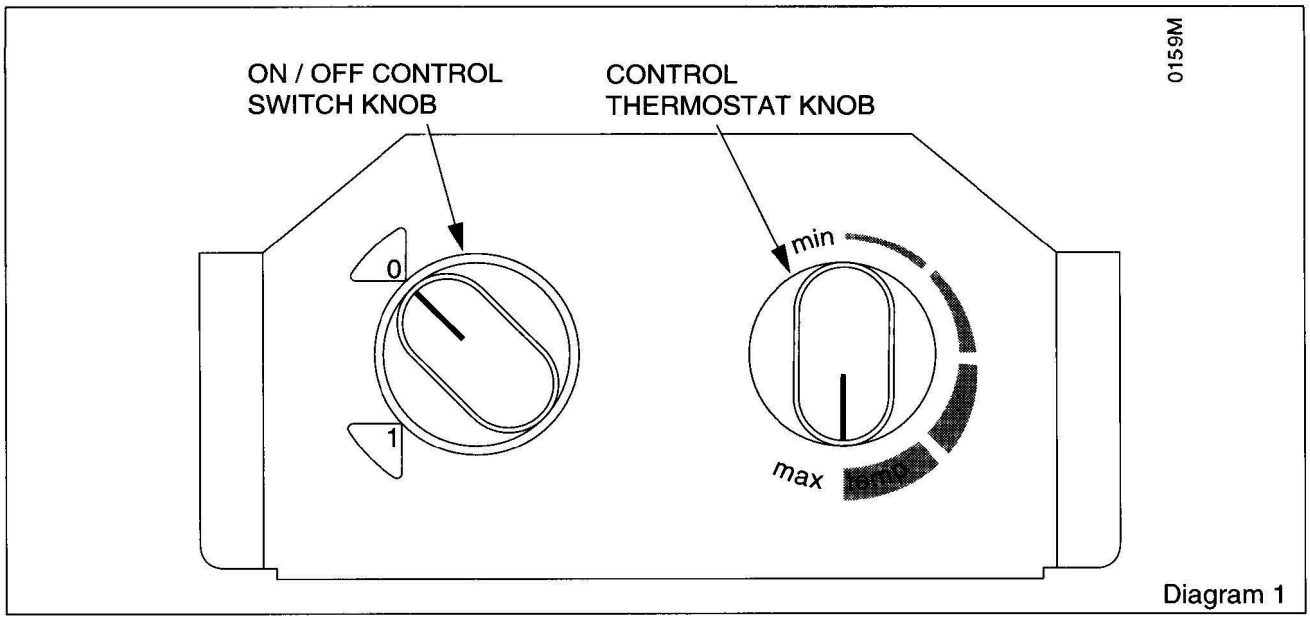

Diagram 1

CE Mark

The CE mark on this appliance shows compliance with

1. Directive 90/396/EEC on the approximation of the Laws of the Member States relating to appliances burning gaseous fuels.

2. Directive 94/42/EEC on efficiency requirements for new hot water boilers fired with liquid or gaseous fuels.

3. Directive 73/23/EEC on the harmonization of the Laws of the Member States relating to electrical equipment designed for use within certain voltage limits.

Gas Leak or Fault

If a gas leak or fault exists, or is suspected, the BOILER MUST BE TURNED OFF, including the electrical supply and MUST NOT BE USED UNTIL THE FAULT HAS BEEN PUT RIGHT. Advice/help should be obtained from your installation/servicing company or the local gas undertaking.

Maintenance/Servicing

To ensure the continued efficient and safe operation of the boiler it is recommended that it is checked and serviced as necessary at regular intervals. The frequency of servicing will depend upon the particular installation conditions and usage, but in general once a year should be enough.

If this appliance is installed in a rented property there is a duty of care imposed on the owner of the property by the current issue of the Gas Safety (Installation and Use) Regulations, Section 35.

It is the Law that any servicing must be carried out by a competent person.

Boiler Clearances

If fixtures are positioned close to the boiler, space must be left as shown in diagram 3. Enough space must also be left in front of the boiler to allow for servicing.

Boiler Installed in Cupboard or Compartment

If the boiler is installed in a cupboard or compartment do not obstruct any ventilation openings.

Do not use the cupboard or compartment for storage.

Regularly make sure that the air vent openings are clear of obstructions.

Cleaning

WARNING. This appliance contains metal parts (components) and care should betaken when handling and cleaning, with particular regard to edges.

Clean the casing occasionally by wiping it over with a damp soapy cloth or dry polishing duster.

Do not use an abrasive cleaner.

Boiler Electrical Supply

Warning. The boiler must be earthed.

Connection of the boiler and any system controls to the mains (240V~50Hz) must be by one unswitched shuttered socket outlet and fused 3A fused 3 pin plug.

Alternatively a 3A fused double pole isolating switch may be used, having a minimum double pole contact separation of 3mm, serving only the boiler and system controls.

The colours of three core flexible cable are: Brown - live, Blue - neutral, Green and Yellow - earth.

As the marking on your plug may not correspond with these colours proceed as follows:-

The wire coloured brown must be connected to the terminal marked "L" or Red.

The wire coloured blue must be connected to the terminal marked "N" or Black.

The wire coloured green/yellow must be connected to the terminal marked "E" or Green or the earth symbol ⏚ .

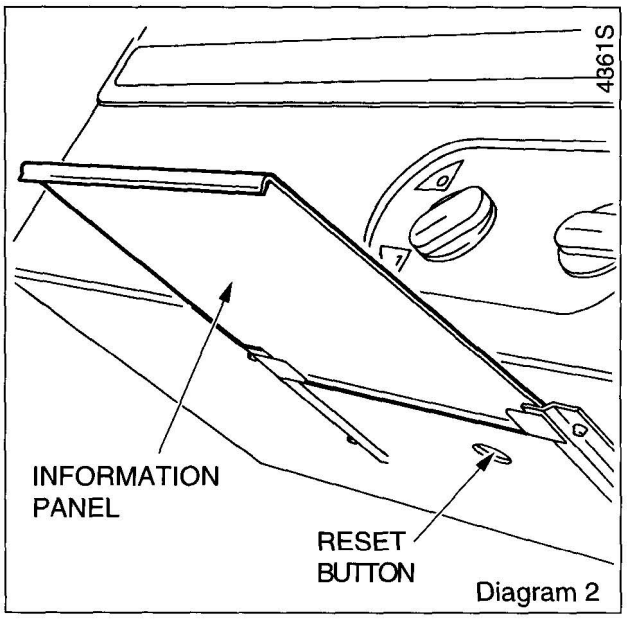

Diagram 2

Electrical Supply Failure

Failure of the electrical supply will cause the burner to go out.

Should this happen, operation of the boiler will normally resume after the electrical supply is restored.

If the burner does nor relight after an electrical supply failure the overheat device may need resetting, pull the information panel forwards and push the reset button, see diagram 2.

Overheat Safety Cutoff

If the cutoff operates on any other occasion than an electrical failure, press the rest button as stated in "Electrical Supply Failure".

If the boiler fails to relight contact your installation/ servicing company.

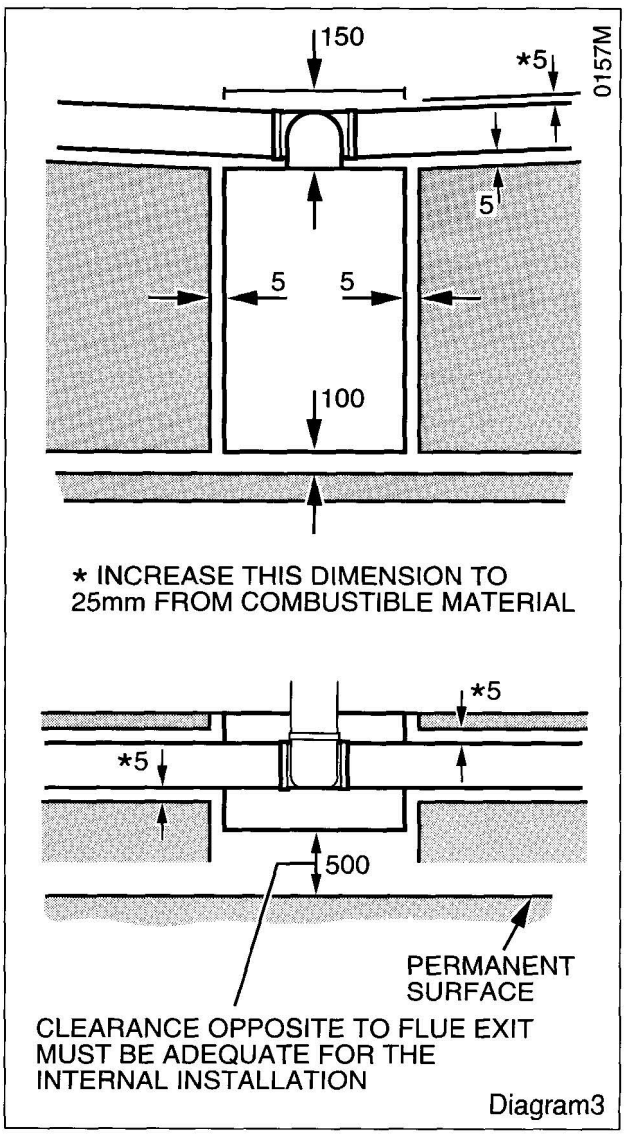

Diagram3

To Turn the Boiler On

Sealed Water Systems only.

CAUTION. A sealed water system must be filled and pressurised by a competent person.

Only light the boiler when you are sure that the system and boiler have been filled and pressurised.

The pressure gauge should show at least 0.7bar, anything less than this figure could indicate a leak and you MUST contact your installation/servicing company.

If there is any doubt about the boiler and system being full of water consult your installation/servicing company.

All Systems

Turn the electrical supply on to the boiler and check that any remoter controls are set to your requirements, refer to manufacturer's instructions for these items.

Turn the "ON/OFF" switch to "I".

The boiler lighting operation is now automatic as follows:

The fan operates, followed by an ignition spark until the burner lights.

The burner will remain alight until switched off by the control thermostat or other remote control.

If the "ON/OFF" switch is turned to "O", "Off" by hand, wait at least 30 seconds before turning on again.

When the boiler thermostat or external controls are satisfied the burner will go out.

The automatic lighting sequence will operate again when heat is required.

Should the boiler fail to come on at the required time, turn the boiler "OFF" and "ON" again. The ignition system will reset and the boiler will light.

To Turn the Boiler Off

For short periods, turn "ON/OFF" switch to "O".

To relight the main burner, turn the "ON/OFF" switch to "I", see diagram 2.

For longer periods, turn the "ON/OFF" switch to "O" and switch off the electrical supply.

To relight follow the sequence given above.

Note. If the burner goes out for any reason, wait 30 seconds before relighting.

Protection Against Freezing

If the boiler is to be out of use for any long period of time during severe weather conditions we recommend that the whole system, including the boiler, be drain off to avoid the risk of freezing up. Makes sure that, if fitted, the immersion heater in the cylinder is switched off.

If you have a sealed water system contact your installation/servicing company as draining, refilling and pressurising must be carried out by a competent person.

Because of our constant endeavour for improvement details may vary slighting from those given in these instructions.

Because of our constant endeavour for improvement details may vary slightly from those in the instructions.