220678B.11.96
COSHH

Glow-worm

Installation & Servicing Instructions

To be left with the user

FUELSAVER Compfheat

65 GC No. 41 319 21 80 GC No. 41 319 18

Fanned Flue Sealed System Boiler

4746

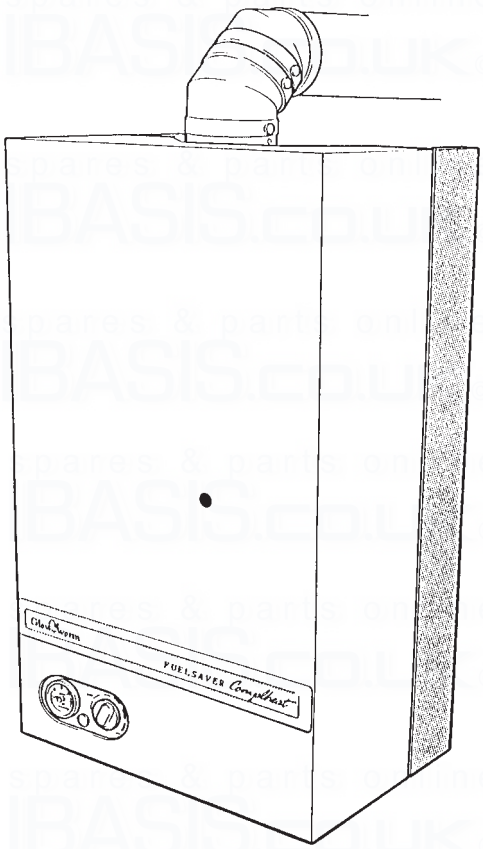

CE *This is a Cat I_{2H} appliance*

BS 6332
BS 5258

Reference in these instructions to British Standards and Statutory Regulations/Requirements apply only to the United Kingdom.

For Ireland the rules in force must be used.

HEAT CALL
One Contact Total Service
Customer Services:
Tel: (01773) 828100
Fax: (01773) 828070

Hepworth Heating Ltd.,
Nottingham Road, Belper, Derbyshire. DE56 1JT
General/Sales enquiries:
Tel: (01773) 824141 Fax: (01773) 820569

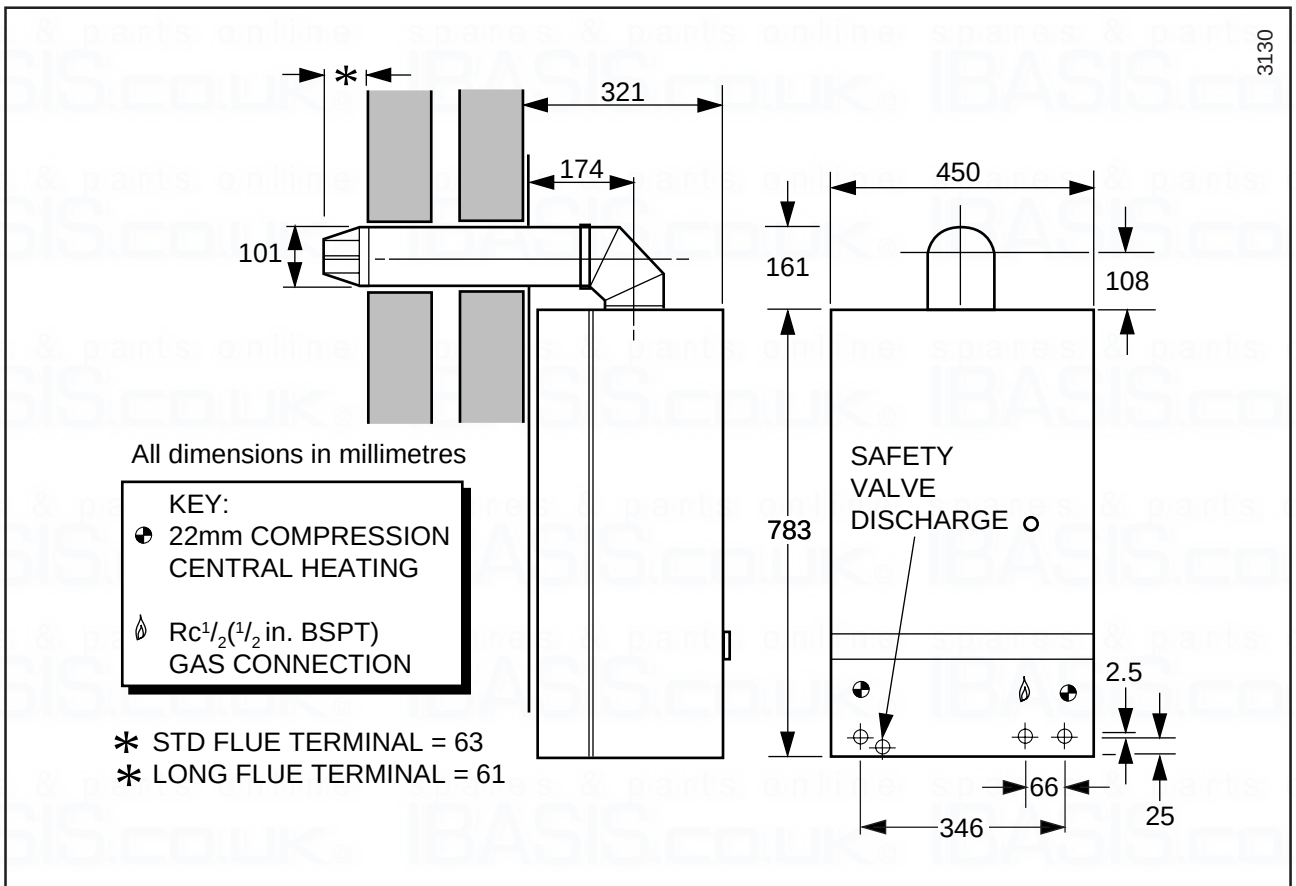

OVERALL DIMENSIONS Diagram 1.1

The instructions consist of two parts, Installation and Servicing Instructions and Instructions for Use, which includes the Guarantee Registration Card.
The instructions are an integral part of the appliance and must, to comply with the current issue of the Gas Safety (Installation and Use) Regulations, be handed to the user on completion of the installation.

1.1 Important Notices

This boiler is for use only on G20 gas.

Wherever possible, all materials, appliances and components to be used shall comply with the requirements of applicable British Standards.

Where no British Standard exists, materials and equipment should be fit for their purpose and of suitable quality and workmanship.

This boiler is not suitable for use out of doors.

THIS BOILER IS FOR USE ONLY IN A SEALED WATER SYSTEM.

1.2 Sheet Metal Parts

WARNING. When installing or servicing the boiler care should be taken when handling sheet metal parts to avoid any possibility of personal injury.

1.3 Statutory Requirements

The installation of the boiler MUST be carried out by a competent person in accordance with the relevant requirements of the current issue of:

Manufacturer's instructions, supplied.

The Gas Safety (Installation and Use) Regulations, The Building Regulations, The Building Standards (Scotland) Regulations (applicable in Scotland) Local Water Company Bye-laws, The Health and Safety at Work Act, Control of Substances Hazardous to Health, The Electricity at Work Regulations and any applicable local regulations.

Detailed recommendations are contained in the current issue of the following British Standards and Codes of Practice,

BS4814, BS5440 Part 1 and 2, BS5449, BS5546, BS6700, BS6798, BS6891, BS7074 Part 1 and 2, BS7478, BS7593, BS7671.

Manufacturer's instructions must not be taken as overriding statutory requirements.

1.4 BSI Certification

The boiler is certificated to the current issue of BS6332 Part 1, invoking the current issue of BS5258 Part 1 for performance and safety. It is, therefore, important that no alteration is made to the boiler, without permission, in writing, from Hepworth Heating Ltd.

Any alteration that is not approved by Hepworth Heating Ltd., could invalidate the BSI Certification of the boiler, the warranty and could also infringe the current issue of the Statutory Requirements.

CE Mark

The CE mark on this appliance shows compliance with:

1. Directive 90/396/EEC on the approximation of the Laws of the Member States relating to appliances burning gaseous fuels.

2. Directive 73/23/EEC on the harmonization of the Laws of the Member States relating to electrical equipment designed for use within certain voltage limits.

3. Directive 89/336/EEC on the approximation of the Laws of the Member States relating to electromagnetic compatibility.

1.5 Range Rating

The boiler is range rated and is factory preset to maximum, but may be adjusted to suit individual system requirements, refer to Range Rating Table 2.

1.6 Equipment

The boiler is supplied with an integral expansion vessel, circulating pump, safety valve, pressure gauge, low water pressure warning light, automatic bypass valve, gas cock and valved water connections (with drain points).

Data Label

The data label is positioned on the inner case cover.

Appliance Data refer to Table 1.

1.7 Gas Supply

The gas installation must be in accordance with the current issue of BS6891.

The supply from the governed meter must be of adequate size to provide a steady inlet working pressure of 20mbar (8in wg) at the boiler.

On completion, test the gas installation fro the soundness using the pressure drop method and leak detection fluid, purge in accordance with the current issue of BS6891.

1.8 Electrical Supply

WARNING. This boiler must be earthed.

All system components and wiring shall be of the approved type and comply with and be connected in accordance with the requirements of current issue of BS7671 and any applicable local regulations.

Connection of the boiler and system controls to the mains supply must be through a common isolator and must be fused 3A maximum. The method of connection should be, preferably, by a fused double pole isolating switch, provided it has a minimum contact separation of 3mm on both poles. This switch should be readily accessible and preferably adjacent to the appliance. It should supply the appliance only and be easily identifiable as so doing.

Alternatively an unswitched shuttered socket outlet and 3A fused 3 pin plug both to the current issue of BS1363 may be used provided that they are not used in a room containing a bath or shower.

Wiring to the boiler must be PVC insulated cable at least 0.75mm^2 (24/0.20mm) to the current issue of BS6500 Table 16.

TABLE 1

MODEL	65	80
LIFTING WEIGHT	39.72kg (87.57lb)	39.72kg (87.57lb)
TOTAL WEIGHT	54.22kg (119.53lb)	54.22kg (119.53lb)
WATER CONTENT	0.8 litre (0.176 gal)	0.8 litre (0.176 gal)
GAS CONNECTION	Rc $^1/_2$ ($^1/_2$ in. BSPT)	
WATER CONNECTION	22mm copper, **return** at right, **flow** at left	
ELECTRICITY RATING	150W, internal fuse F1A.	
ELECTRICITY SUPPLY	240V~50Hz fused 3A	
DATA LABEL	On the inner case front	
INJECTOR SIZE	3.7mm	4.3mm

TABLE 2. *Compheat 65*

RANGE RATING		min	mid	max
NOMINAL HEAT INPUT	*Btu/h*	68,320	74,400	80,340
	kW	20.0	21.8	23.5
NOMINAL HEAT OUTPUT	*Btu/h*	55,000	60,000	65,000
	kW	16.1	17.6	19.1
BURNER SETTING PRESSURE	*m bar*	9.9	12.0	14.1
	in.w.g	4.0	4.8	5.7
APPROX GAS RATE	*m^{3}h*	1.9	2.1	2.2
	ft^{3}h	67.1	74.2	77.7

TABLE 2. *Compheat 80*

RANGE RATING		min	mid	max
NOMINAL HEAT INPUT	*Btu/h*	82,600	91,200	99,000
	kW	24.2	26.7	29.0
NOMINAL HEAT OUTPUT	*Btu/h*	65,000	72,500	80,000
	kW	19.1	21.2	23.4
BURNER SETTING PRESSURE	*m bar*	9.3	11.7	13.9
	in.w.g	3.7	4.7	5.6
APPROX GAS RATE	*m^{3}h*	2.3	2.5	2.7
	ft^{3}h	81.2	88.3	95.3

2.1 General Notes

The installation of the boiler must comply with the requirements of the current issue of BS6798.

2.2 Safety Valve

The safety valve, preset at 3bar, is an integral part of the boiler and cannot be adjusted.

2.3 Pressure gauge

A pressure gauge is incorporated into the boiler to indicate the system pressure.

2.4 Circulating Pump

The circulating pump is integral with the boiler.

The remaining conveying capacity of the pump is shown in diagram 2.1.

2.5 Expansion Vessel

The boiler has an integral expansion vessel with a capacity of 12 litres (2.64 gallons), with a charge pressure of 0.75bar.

The maximum heating system water content using the fitted expansion vessel ranges from 176 litres with a cold fill pressure of 0.7bar, to 145 litres with a cold fill pressure of 1.05bar. If, due to a high static head, the cold fill pressure is higher, then the expansion vessel pre-fill pressure must be increased and the maximum system volume decreased, see the current issue of BS7074 Part 1.

Further information can be obtained from the British Gas Publication “British Gas Specification for Domestic Wet Central Heating Systems” and the current issue of BS4814, BS5449 and BS7074 Part 1 and 2.

2.6 Flow Rate

A valve must be incorporated in the main flow or return of the system, valve “A” shown in the flow diagram 2.2. This valve must be lockable and be positioned so that inadvertent closure or unauthorised interference is not possible. The design differential is 11°C (20°F) with the boiler thermostat set at “MAX” which is about 82°C (180°F). The pump adjuster should always be left at maximum (3).

2.7 Bypass

An automatic bypass valve is incorporated in the boiler pipework it is preset and <u>must</u> <u>not</u> be adjusted.

WATER FLOW RATE
AT 11°C (20°F) DIFFERENTIAL

UNIT	65	80
litre/min.	24.9	30.6
gal/min.	5.5	6.7

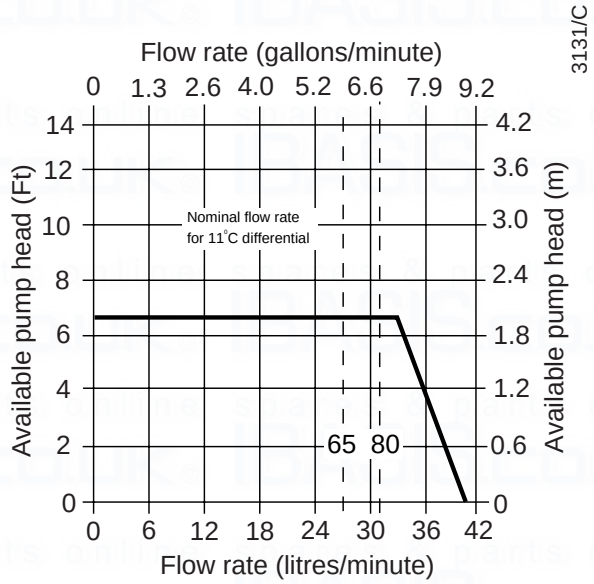

REMAINING CONVEYING CAPACITY OF PUMP Diagram 2.1

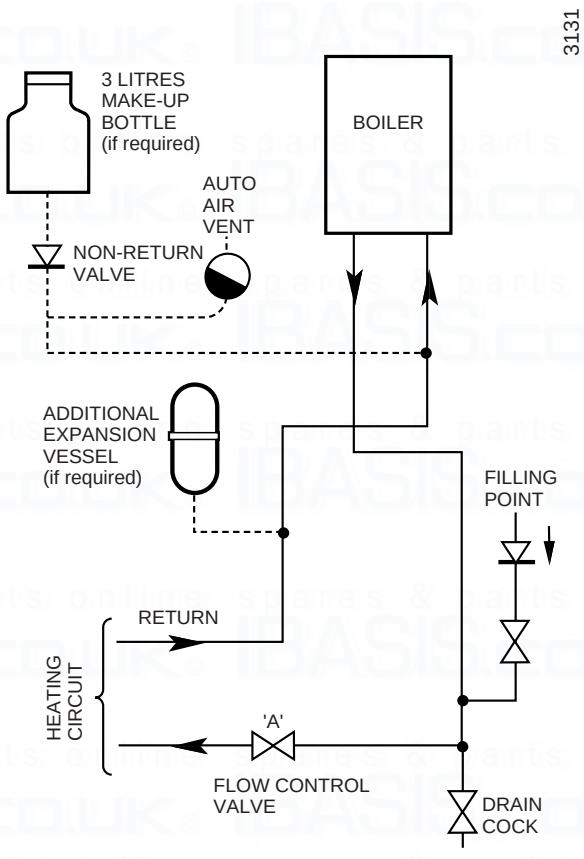

WATER SYSTEM DIAGRAMATIC LAYOUT Diagram 2.2

2.8 Water Make Up

Provision should be made for replacing water lost from the system using a make up bottle mounted in a position higher than the top point of the system, connected through a non-return valve to the return side of the heating circuit, see diagram 2.2.

Alternatively, provision for make up can be made using a filling loop.

2.9 Filling Sealed Water Systems

Provision for filling the system at a low level must be made.

Three methods of filling are shown in diagram 2.3.

There must be no permanent connection to the mains water supply, even through a non-return valve.

2.10 Corrosion Inhibitor

Attention is drawn to the current issue of BS5449 and BS7593 on the use of inhibitors in central heating systems.

If an inhibitor is to be used in the system, contact a manufacturer for their recommendations.

2.11 Existing Systems

When fitting the boiler into an existing system, special care should be taken to drain the entire system, including radiators, then thoroughly cleaning out before fitting the boiler whether or not adding an inhibitor.

2.12 Draining Tap

A draining tap must be provided at the lowest points of the system, which will allow the entire system to be drained. An additional draining tap MUST be fitted close to the boiler.

Draining taps must be to the current issue of BS2879.

The flow and return isolating valves on the boiler are fitted with drain points for heat exchanger draining.

2.13 Domestic Hot Water System

General

The domestic hot water service must be in accordance with the current issue of BS5546, refer also to the current issue of BS6700.

2.14 Domestic Hot Water Cylinder

SINGLE FEED INDIRECT CYLINDERS ARE NOT SUITABLE AND SHOULD NOT BE USED.

The domestic hot water cylinder must be of the indirect coil type. It must be suitable for a working at a gauge pressure of 0.35bar above the safety valve setting.

2.15 Domestic Hot Water System - Unvented

Where a storage system will not have a vent to atmosphere the installation must comply with Building Regulations and local Water Company bye-laws, see also the current issue of BS6700.

If fitting into an existing system the local authority should be informed.

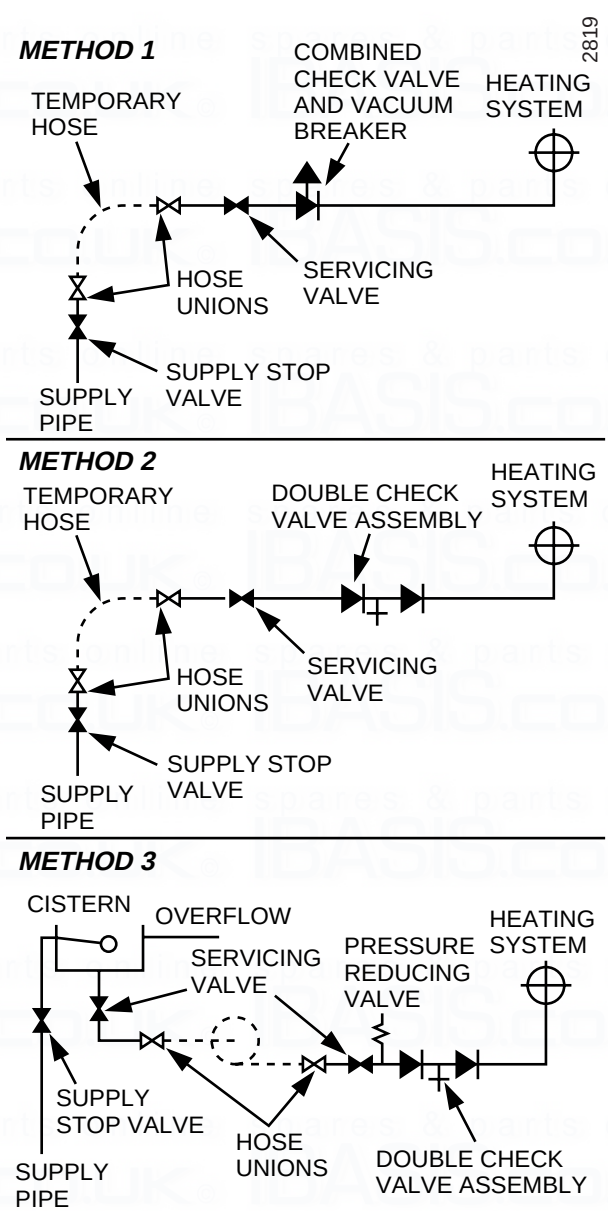

FILLING SEALED WATER SYSTEMS Diagram 2.3

3.1 General

The boiler may be installed in any room although particular attention is drawn to the requirements of the current issue of the BS7671 with respect to the installation of a boiler in a room containing a bath or shower.

Any electrical switch or boiler control using mains electricity should be so situated that it cannot be touched by a person using the bath or shower.

The electrical provisions of the Building Standards (Scotland) Regulations are applicable to such installations in Scotland.

The boiler must be mounted on a flat wall which is sufficiently robust to take its complete weight, see Data Table 1.

This boiler may be fitted to a wall made of combustible material, see diagram 3.1.

3.2 Boiler Clearances

The boiler should be positioned so that at least the minimum operational and servicing clearances are provided, see diagram 3.1.

3.3 Timber Frame Buildings

If the boiler is to be installed in a timber frame building, it should be fitted in accordance with the British Gas Publication “Guide for Gas Installation in Timber Framed Housing” reference DM2. If in doubt, seek advice from the local gas undertaking or Hepworth Heating Ltd.

3.4 Room Vent

The boiler is room sealed, so when installed in a room or space, a permanent air vent is not required.

3.5 Cupboard or Compartment Vent

Where the boiler is fitted in a cupboard or compartment, permanent high and low level ventilation must be provided.

The vent areas required are given in Table 3.

Where the installation of the boiler will be in an unusual location, special procedures are necessary, refer to the current issue of BS6798 for guidance.

Make sure that the cupboard or compartment air vents are positioned to be clear of obstructions at all times.

A compartment used to enclose the boiler must be designed and constructed specifically for this purpose.

An existing cupboard or compartment modified for the purpose may be used, refer to the current issue of BS6798 for guidance.

The doorway opening should be of sufficient size to allow easy removal of the boiler.

TABLE 3. COMPARTMENT AIR VENTS

VENTILATION REQUIREMENTS		HIGH LEVEL VENT AREA		LOW LEVEL VENT AREA	
MODEL →		cm²	in²	cm²	in²
VENTILATION FROM ROOM OR SPACE	**65**	212	32	212	32
	80	261	40	261	40
VENTILATION FROM OUTSIDE	**65**	106	16	106	16
	80	131	20	131	20

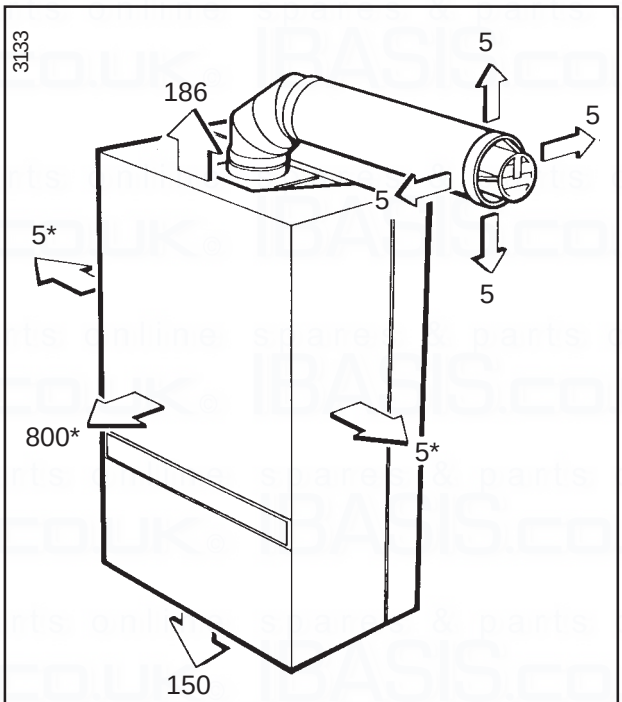

✻ WHERE EXTERNAL ACCESS TO THE FLUE IS NOT PRACTICAL THEN CLEARANCE MUST BE ADEQUATE TO PERMIT INSTALLATION OF THE FLUE

MINIMUM CLEARANCES FROM WALLS, CEILING, FLOOR, CUPBOARD, WORKTOPS AND INFLAMMABLE MATERIALS

MINIMUM CLEARANCES Diagram 3.1

The flue must be installed in accordance with the current issue of BS5440 Part 1.

The air and flue ducting connect to the top of the boiler using an elbow which can be positioned to the left or right hand side or the rear.

The rear and side flue assemblies are designed for internal installation, but if necessary, due to insufficient clearances (boiler/flue terminal location) they can be installed from the outside.

For a wall thickness up to 300mm the flue can be fully installed from the inside.

For wall thickness of over 300mm the external cut hole will need to be made good from the outside.

The standard flue will provide the flue length range as shown in diagram 4.1 and 4.2.

If a longer flue is required, do not extend the ducting. A 1, 2 or 3metre flue system must be used and can be supplied. This will provide the flue length range as shown in diagram 4.1 and 4.2.

A "Flue Bend Kit" and "Vertical Flue Kit" can be supplied.

STANDARD FLUE TERMINAL ILLUSTRATED

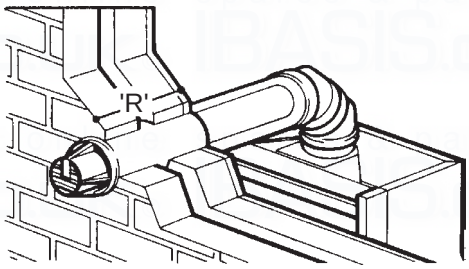

Rear Flue Lengths	
R = Wall Thickness	
Flue. STD	75mm to 598mm
1m	75mm to 913mm
2m	75mm to 1913mm
3m	75mm to 2908mm

REAR FLUE Diagram 4.1

STANDARD FLUE TERMINAL ILLUSTRATED

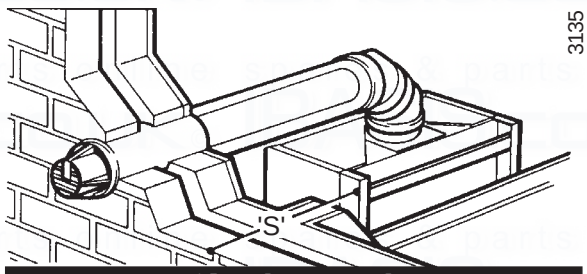

Side Flue Lengths	
S='External wall face'to'boiler mounting frame'	
Flue. STD	80mm to 547mm
1m	80mm to 857mm
2m	80mm to 1857mm
3m	80mm to 2852mm

SIDE FLUE Diagram 4.2

4.1 Terminal Position

The minimum acceptable siting dimensions for the terminal from obstructions, other terminals and ventilation openings are shown in diagram 4.3.

The terminal must be exposed to the external air, the position allowing free passage of air across it at all times.

Car ports or similar extensions of a roof only, or a roof and one wall, require special consideration with respect to any openings, doors, vents or windows under the roof. Care is required to protect the roof if it is made of plastic sheeting. If the car port comprises of a roof and two or more walls, seek advice from the local gas company before installing the boiler. If the terminal is fitted within 600mm below plastic guttering and aluminium shield 1500mm long should be fitted immediately beneath the guttering or eaves. If the terminal is fitted within 450mm below painted eaves or a painted gutter, an aluminium shield 750mm long should be fitted immediately beneath the guttering or eaves.

4.2 Terminal Guard

A terminal guard is required if persons could come into contact with the terminal or the terminal could be subject to damage.

If a terminal guard is required, it must be positioned to provide a minimum of 50mm clearance from any part of the terminal and be central over the terminal.

A suitable guard as shown, reference type K3, can be obtained from:

Tower Flue Components Ltd.,
Morley Road,
Tonbridge,
Kent.
TN9 1RA

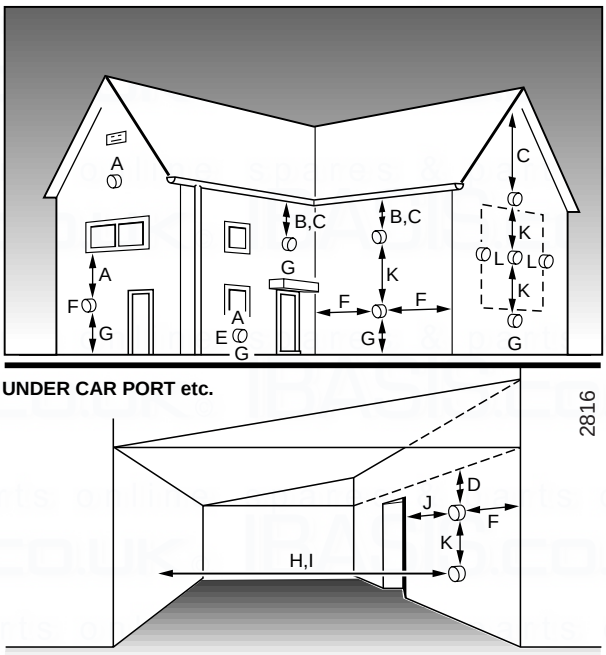

MINIMUM SITING DIMENSIONS FOR FANNED FLUE TERMINALS POSITION

A	DIRECTLY BELOW AN OPENABLE WINDOW, AIR VENT, OR ANY OTHER VENTILATION OPENING	300
B	BELOW GUTTER, DRAIN/SOIL PIPE	75
C	BELOW EAVES	200
D	BELOW A BALCONY OR CAR PORT	200
E	FROM VERTICAL DRAIN PIPES AND SOIL PIPES	75
F	FROM INTERNAL OR EXTERNAL CORNERS	300
G	ABOVE ADJACENT GROUND OR BALCONY LEVEL	300
H	FROM A SURFACE FACING THE TERMINAL	600
I	FACING TERMINALS	1200
J	FROM OPENING (DOOR/WINDOW) IN CAR PORT INTO DWELLING	1200
K	VERTICAL FROM A TERMINAL	1500
L	HORIZONTALLY FROM A TERMINAL	300

Diagram 4.3

0161M

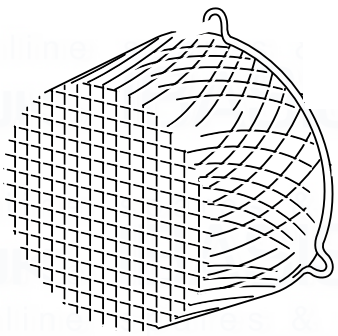

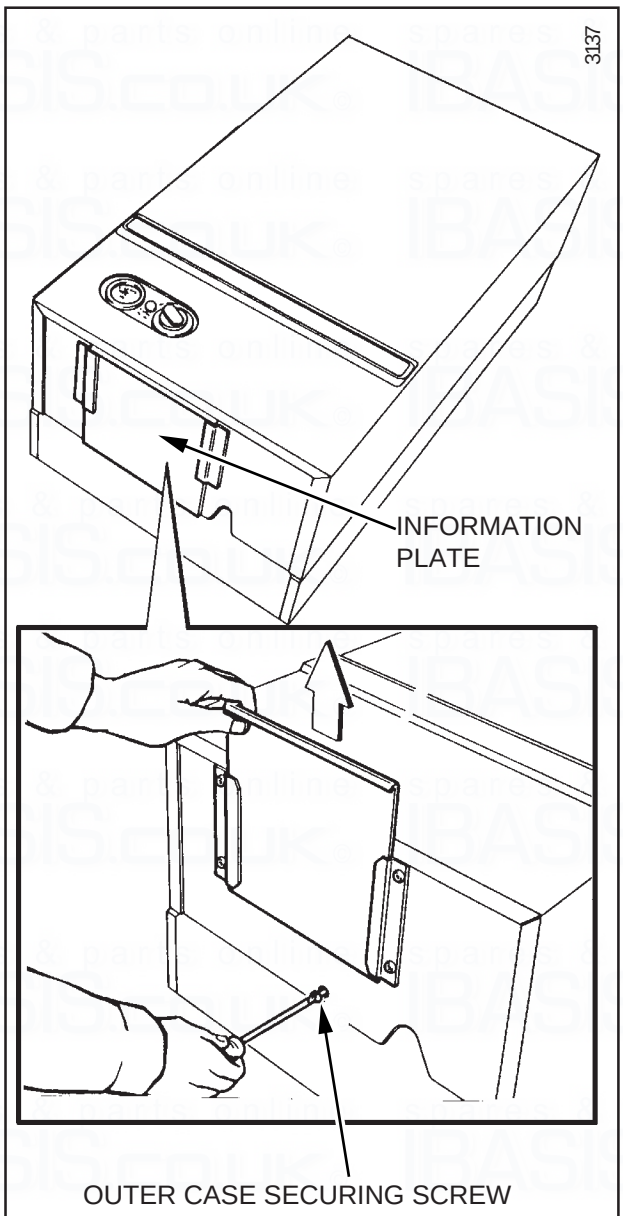

OUTER CASE Diagram 5.1

5.1 Unpacking

Remove the top carton from the boiler.

To remove the outer case, slide the information plate up to access and remove the single securing screw, see diagram 5.1, unhook the case at the top and lift it off.

Remove the cover of the inner case, secured with four screws, see diagram 5.2.

Disconnect the gas service cock union and the front unions of the isolation valves, see diagram 5.3.

Slacken but do not remove the retaining strap screws of the gas service cock and the isolating valves.

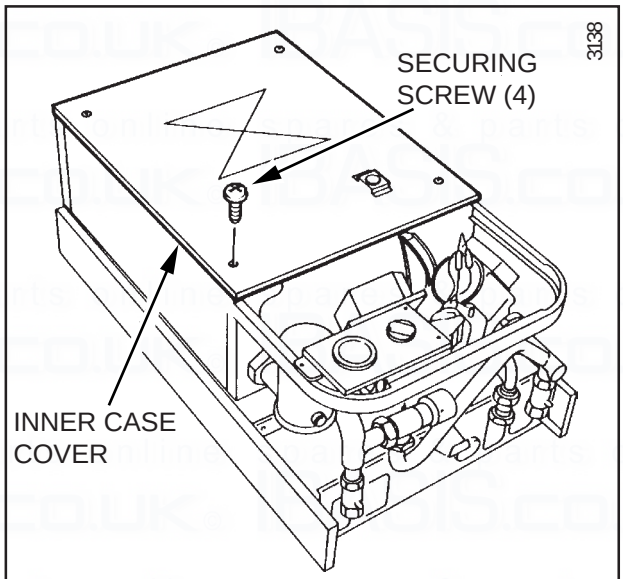

INNER CASE COVER Diagram 5.2

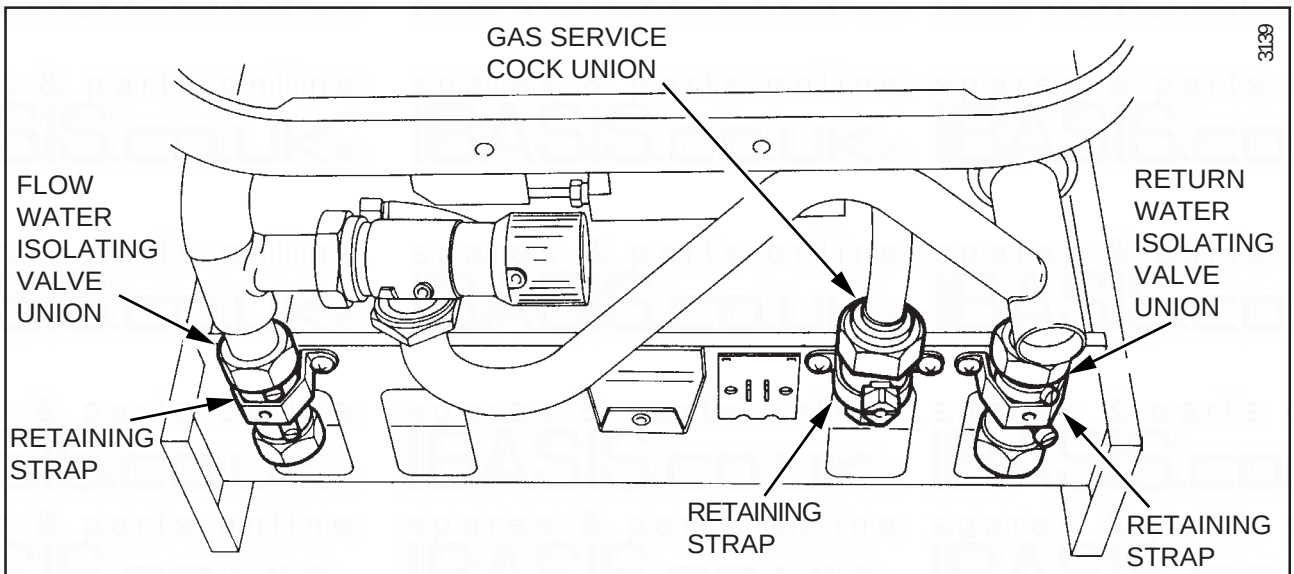

GAS SERVICE COCK / WATER ISOLATING VALVES Diagram 5.3

5 Preparation

Remove the two boiler securing screws, see diagram 5.4 then separate the boiler from the mounting frame, by pulling the location studs/clips apart then unhook it at the top.

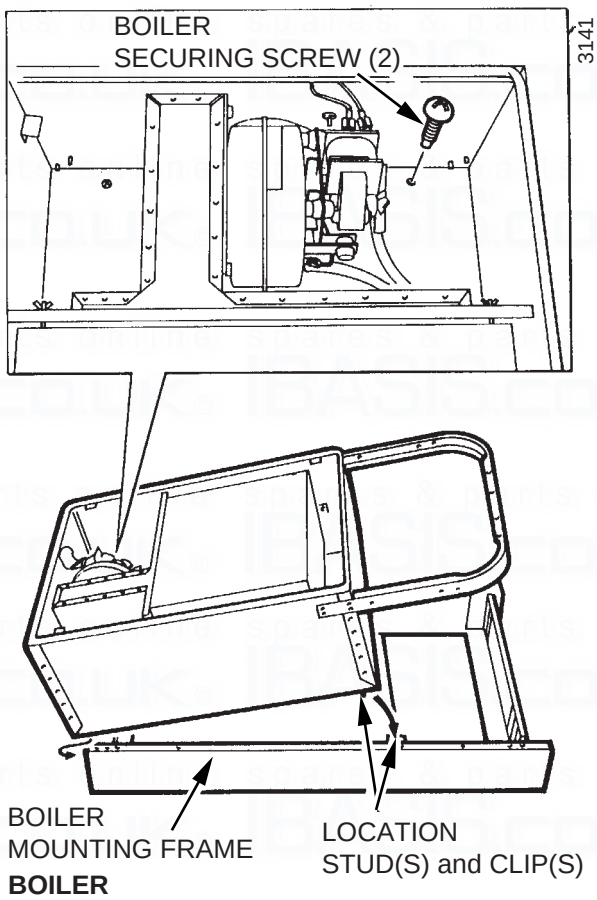

BOILER MOUNTING FRAME Diagram 5.4

6 Installing the Flue

6.1 General

With due regard to boiler location, clearances and having determined the flue application, length and terminal position carry on as follows:

6.2 Marking

The boiler mounting frame is the same width as the boiler but the flue connection sticks up above it. Place the boiler mounting frame on the wall in the required position, maintaining minimum clearances, see diagram 3.1.

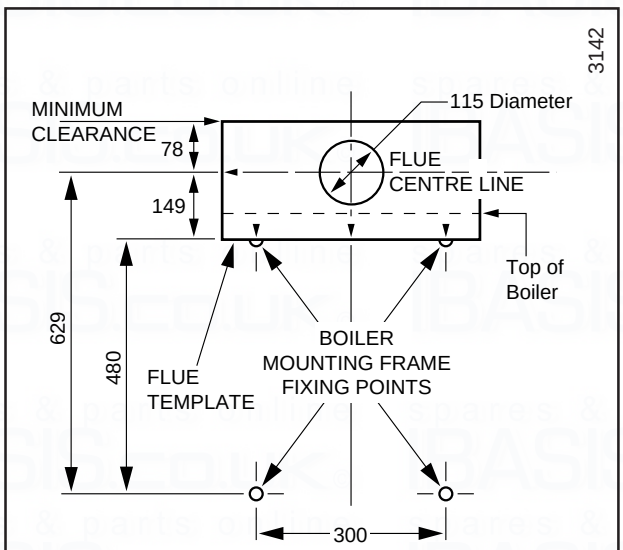

BOILER FIXING POINTS Diagram 6.1

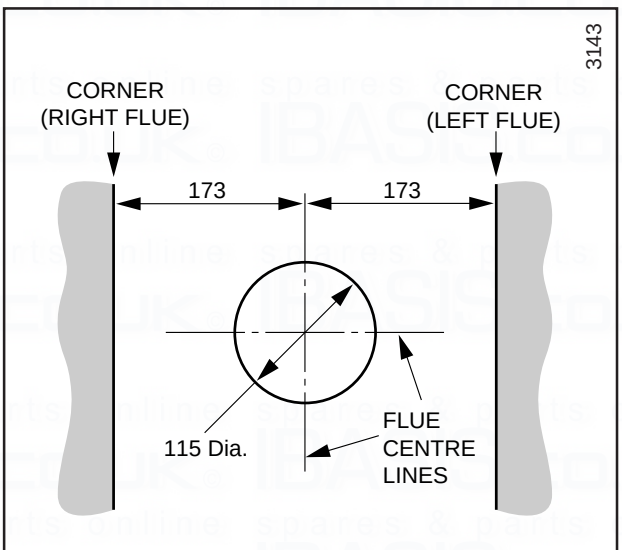

SIDE FLUE Diagram 6.2

Make sure that the isolation valves are at the bottom facing forward and that the frame top is horizontal, then mark the four wall fixing points through the holes in the two horizontal straps, do not drill the holes, see diagram 6.4.

Position the flue template on the wall, the arrow points on the centres of the two upper fixing points previously marked, see diagram 6.1 which also gives dimensions.

For a rear flue, mark the rear flue position as required, centre or diameter.

For a side flue, mark the horizontal flue centre line at the sides of the template. Extend the flue centre line horizontally left or right to the internal corner where the flue is required to exit to the outside. Mark the position of the circular hole, on the flue exit wall, using the dimensions given in diagram 6.2.

From the flue position marks, check that the flue terminal will be in a suitable position, see diagram 4.3.

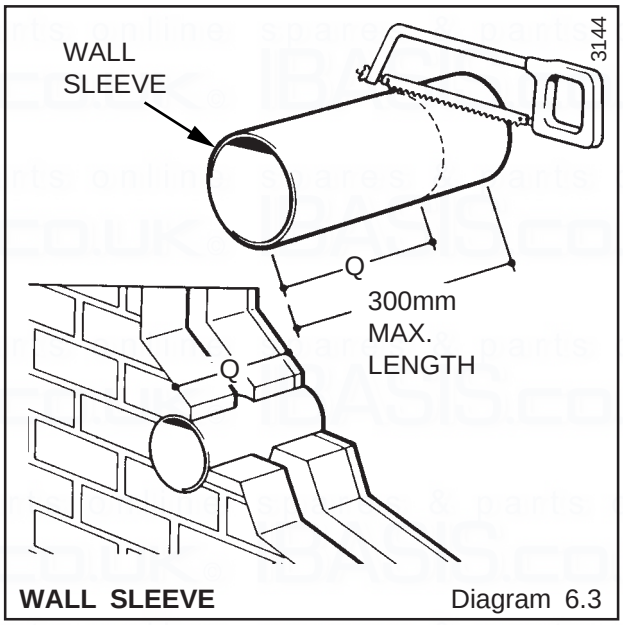

WALL SLEEVE Diagram 6.3

6.3 Flue Hole Cutting

Cut a horizontal hole in the wall, making sure that there is no downward slope towards the boiler position, using, preferably, a core drill, to the diameter shown in diagram 6.1 and 6.2.

6.4 Wall Sleeve

Take the wall sleeve from the pack. If the wall thickness "Q" is less than 300mm, cut the wall sleeve to the required length, see diagram 6.3. If the wall thickness "Q" is greater than 300mm the sleeve must be fitted flush with the outside wall face.

Place the sleeve into the hole.

Make good around the wall sleeve at both internal and external wall faces, through the wall sleeve if internal access only is available.

For a wall thickness of over 300mm the external wall face will need to be made good from the outside.

6.5 Boiler Mounting Frame - Fixing

Position the flue template over the flue hole and check the position of the wall fixing points. Mark the position of the fixing holes again, if required, see diagram 6.1.

Drill the four holes and insert wall plugs to suit No10x50mm screws.

Secure the boiler mounting frame to the wall using No10x50mm screws, see diagram 6.4.

Note: Remove the clear plastic protective film from the sides of the boiler mounting frame.

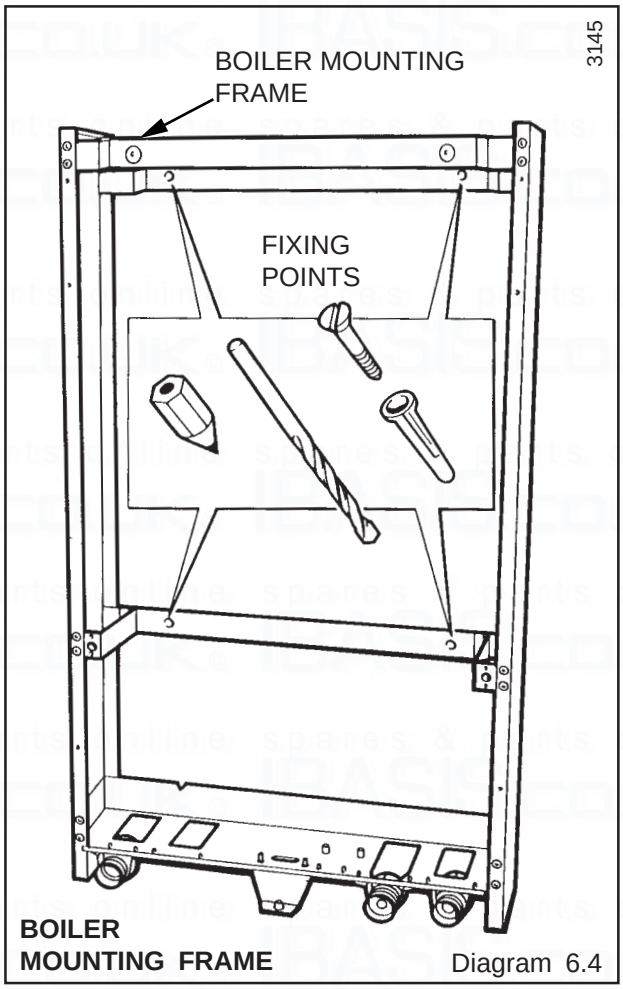

BOILER MOUNTING FRAME Diagram 6.4

6.6 Flue Preparation

Rear Flue

Mark and cut the air duct terminal assembly, see diagram 6.5 and the flue duct, diagram 6.6 to the lengths required, cutting square and removing any burrs.

Refer to diagram 6.9, mark through the holes in the flue elbow assembly and drill the flue duct as shown.

Side Flue

Mark and cut the air duct terminal assembly, see diagram 6.7 and the flue duct, diagram 6.8 to the lengths required, cutting square and removing any burrs.

Refer to diagram 6.9, mark through the holes in the flue elbow assembly and drill the flue duct as shown.

6.7 Flue Assembly

Note. At this point if side or front access is restricted, continue at “External Flue Assembly”.

Internal Flue Assembly

Locate the flue duct into the flue elbow assembly and secure with the screws provided, see diagram 6.9.

Fully locate the flue elbow and flue duct assembly into the air duct/terminal assembly as shown, making sure of correct terminal alignment of the “TOP”, see diagram 6.10.

Mark the position of the air duct terminal assembly securing holes and drill two 3mm diameter holes through the air duct/terminal assembly.

Secure the air duct/terminal assembly to the flue elbow and flue duct assembly with the two self tapping screws supplied in the loose items pack and then seal with the tape provided.

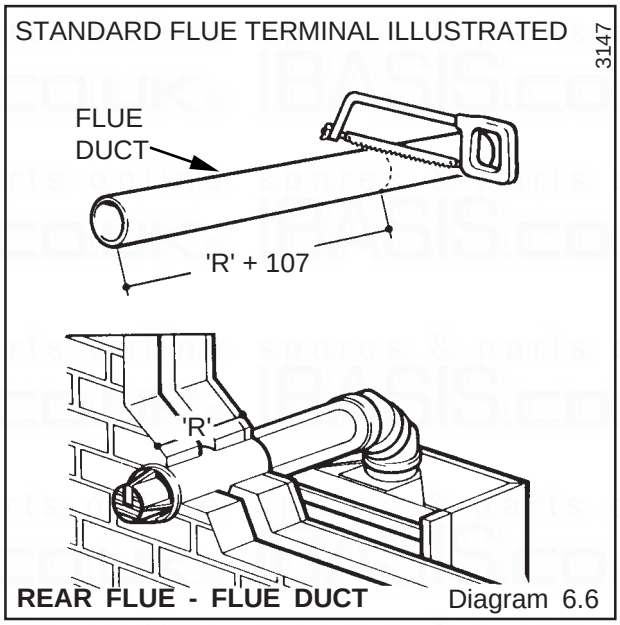

REAR FLUE - FLUE DUCT Diagram 6.6

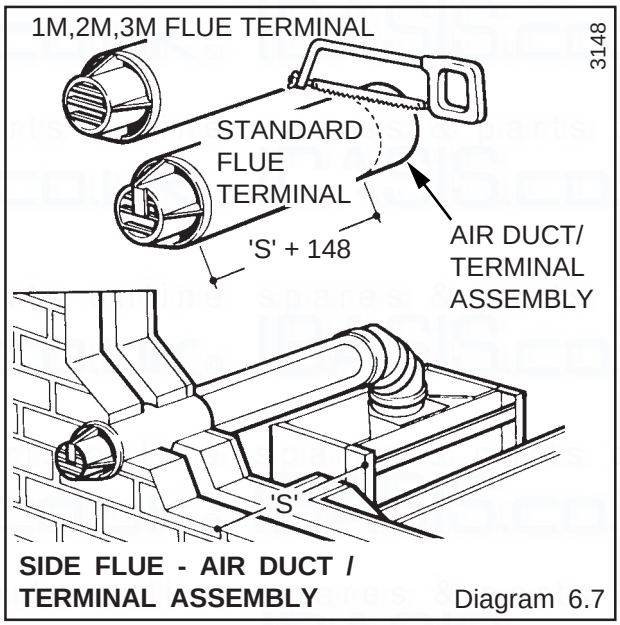

SIDE FLUE - AIR DUCT / TERMINAL ASSEMBLY Diagram 6.7

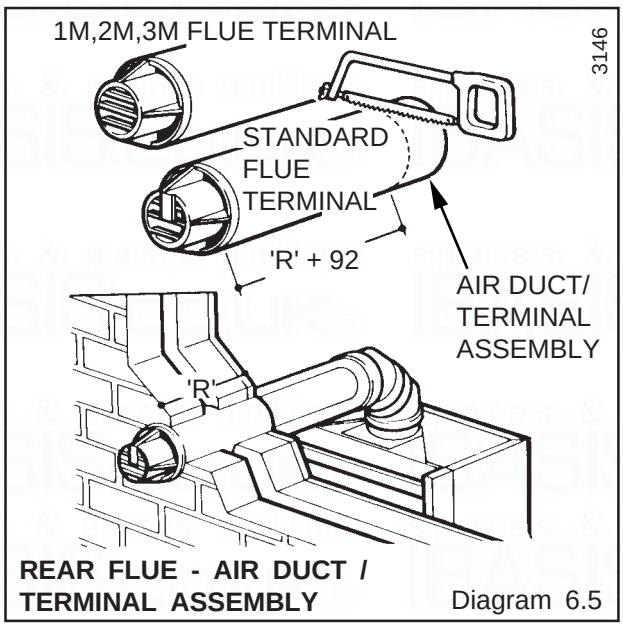

REAR FLUE - AIR DUCT / TERMINAL ASSEMBLY Diagram 6.5

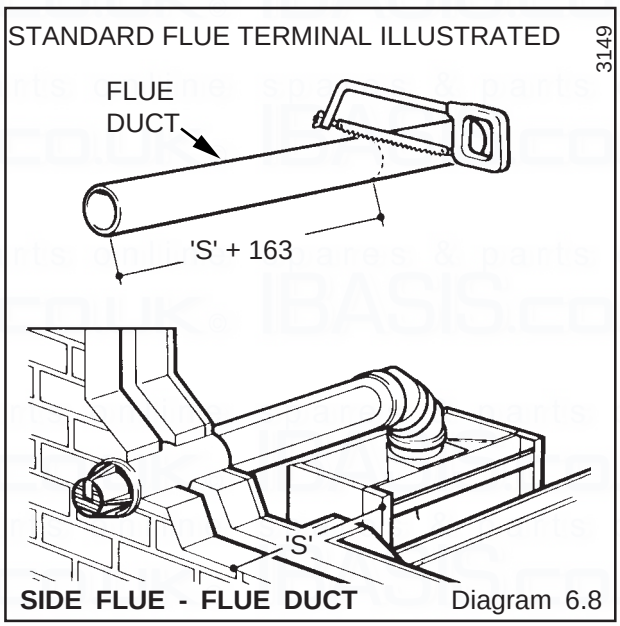

SIDE FLUE - FLUE DUCT Diagram 6.8

Fix the self adhesive seal to the air duct, see diagram 6.11.

Place the flue assembly into the flue hole. Make sure that the flue terminal is correctly positioned and sticking out the correct distance from the outside wall face, see diagram 6.11.

Note. The foam seal is a tight fit in the wall sleeve, so either the wall sleeve will need to be rigidly fixed in the wall, that is, the cement has fully set or it can be held from the other side whilst inserting the flue assembly.

External Flue Installation

Locate the air duct/terminal assembly into the flue elbow assembly as shown in diagram 6.10, making sure of correct terminal alignment of the “TOP”.

Mark the position of the air duct terminal assembly securing holes and drill two 3mm diameter holes through the air duct/terminal assembly.

Fix the self adhesive seal to the air duct, see diagram 6.11.

From outside, place the air duct/terminal assembly and flue duct into the flue hole. Make sure that the flue terminal is correctly positioned and sticking out the correct distance from the outside wall face, see diagram 6.11.

Note. The foam seal is a tight fit in the wall sleeve, so either the wall sleeve will need to be rigidly fixed in the wall, that is, the cement has fully set or it can be held from the other side whilst inserting the flue assembly.

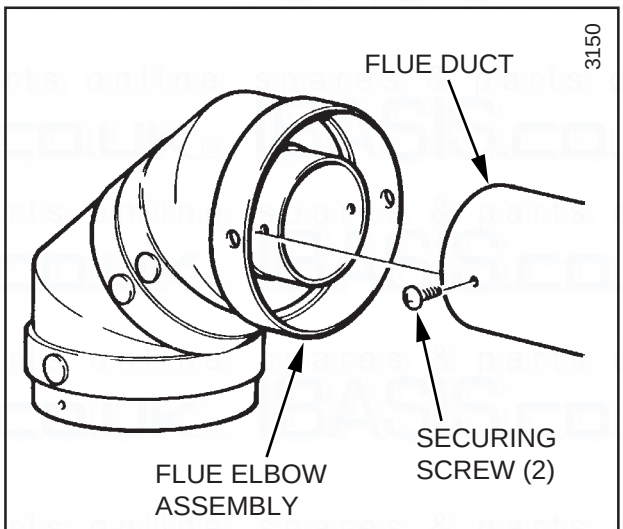

FLUE ELBOW / DUCT ASSEMBLY Diagram 6.9

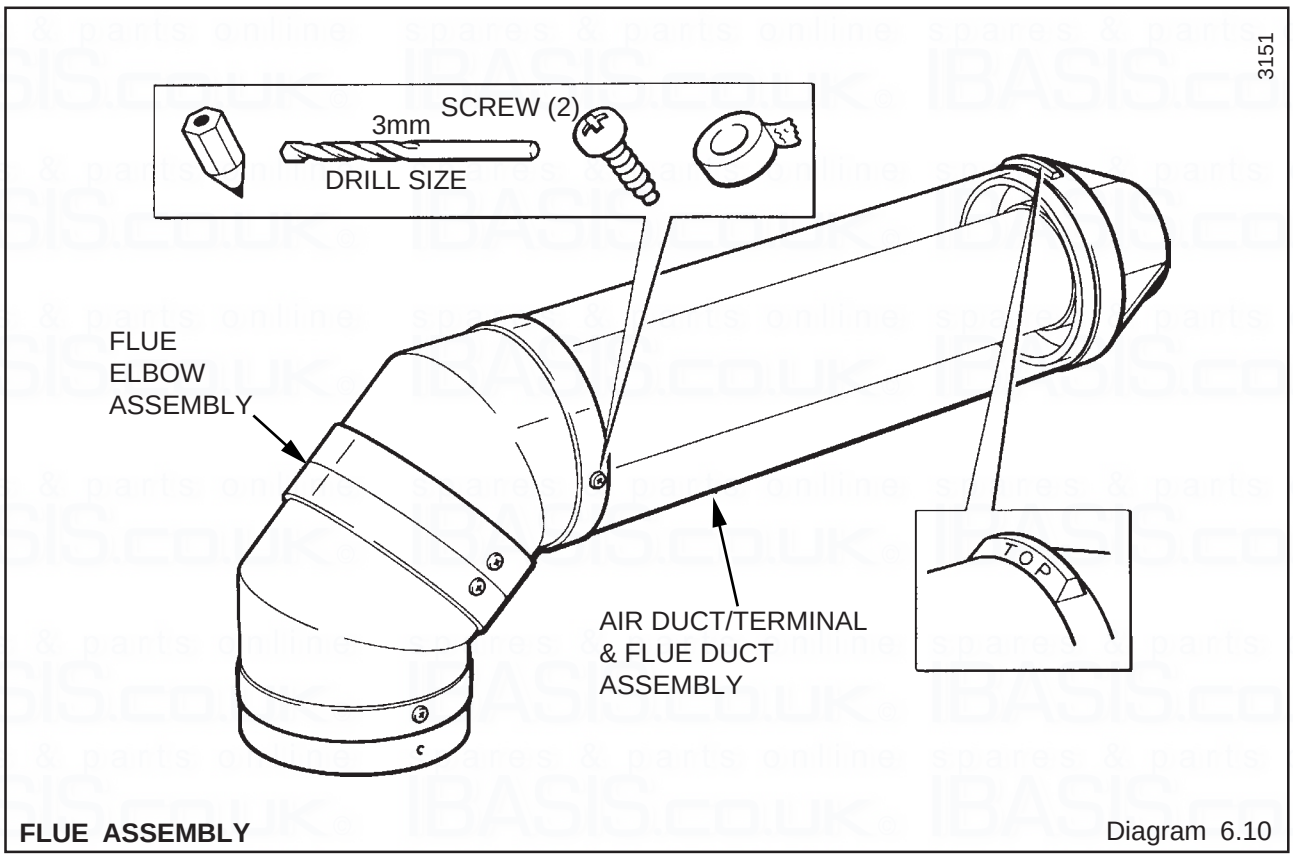

FLUE ASSEMBLY Diagram 6.10

6 Installing the Flue

Locate the flue duct into the air flue elbow assembly and secure with the screw provided.

Secure the air duct terminal to the flue elbow with the two self tapping screws supplied in the loose items pack, making sure that the flue duct is correctly located into the terminal, see diagram 6.11, then seal with the tape provided.

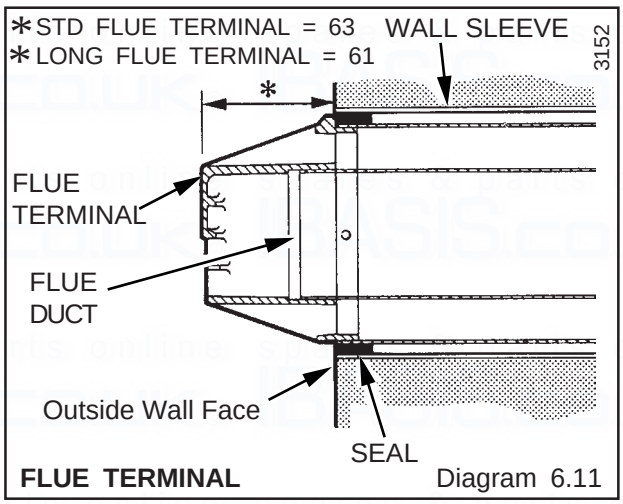

FLUE TERMINAL Diagram 6.11

7 Gas, Water and Electrical Connections

7.1 Gas Connection

The gas supply can be connected from below or through the wall at the rear of the boiler, see diagram 7.1 for position.

Refer also to Section 1.7.

Make the gas connection to the gas service cock.

Slacken or remove the securing strap, whilst making the connection. Do not subject the gas service cock to heat.

7.2 Water Connections

Provision is made for the flow and return pipes to be connected from above, if required, passing down either side of the boiler, see diagram 7.2 for clearances.

Note. Take care that any pipework connected from above within the boiler mounting frame will clear the expansion vessel.

Clean out the heating system before connecting the boiler.

Make the connections to the heating system by way of the isolating valves, see diagram 7.1.

Slacken or remove the securing straps whilst making the connections. Do not subject the valves to heat.

Make sure that the drain points on the valves are positioned toward the front of the boiler, also that the drain and operating screw heads are accessible.

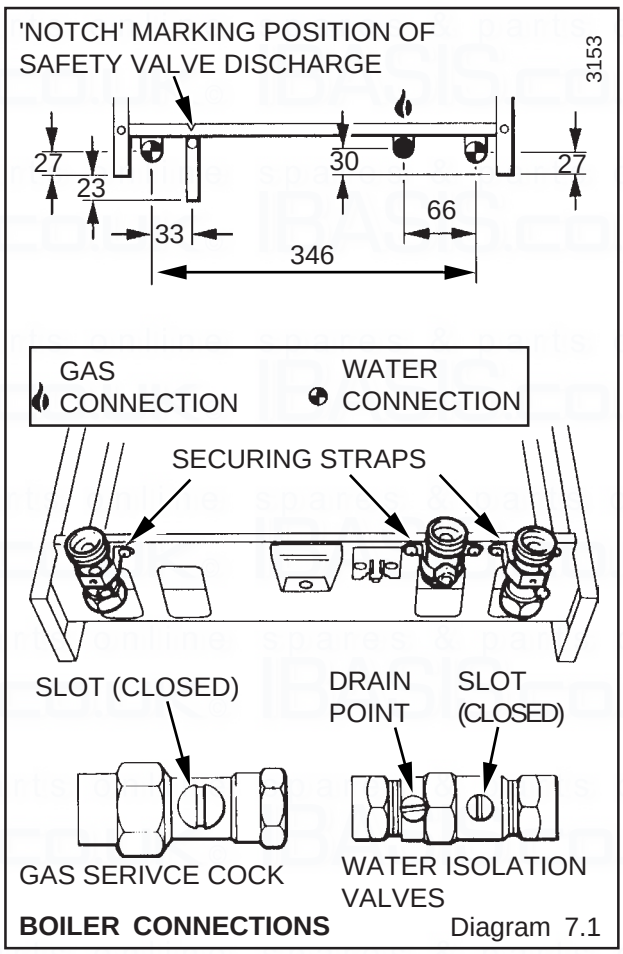

BOILER CONNECTIONS Diagram 7.1

7.3 Safety Valve Discharge

WARNING. It must not discharge above an entrance or window or any type of public access area.

A discharge pipe is supplied loose with the boiler, which when fitted to the safety valve, will terminate below the boiler at the notch, see diagram 7.1.

This must be extended, using not less than 15mm od pipe, to discharge, in a visible position, outside the building, facing downward, preferably over a drain. The pipe must have a continuous fall and be routed to a position such that any discharge of water, possibly boiling water, or steam cannot create a hazard to persons or damage to property or external electrical components or wiring.

Note. To make future servicing easier it is advisable to use a compression type fitting when extending the discharge pipe.

7.4 Electrical Connections

WARNING. The boiler must be earthed.

Take the electrical connector from the loose items pack and remove the two screws and cover, see diagram 7.3.

Using PVC insulated cable at least 0.75mm^2 (24/0.2mm) to BS6500 Table 16 of a suitable length connect the mains supply cable to the appropriate terminals of the connector, see diagram 7.3.

Standard colours are, Brown - Live (L);
Blue - Neutral (N); Green/Yellow - Earth (E).

The mains cable outer insulation must not be cut back external to the connector, see diagram 7.3.

Make the earth conductor of a greater length than the current carrying conductors so that if the conductor is strained the earth would be the last to become disconnected.

It is essential that the polarity is correct.

After completing the connections secure the cable with the connector's cover using the two screws previously removed, making sure no basic insulated wire is accessible outside of the connector, see diagram 7.3.

Clip the electrical connector into position on the boiler mounting frame and secure the mains cable with the cable clamp immediately behind the connector.

If necessary also secure the cables to the wall using suitable cable clips.

Keep cables away from hot surfaces

Carry out preliminary electrical system checks, using a suitable Multimeter, that is, earth continuity, polarity, short circuit and resistance to earth.

7.5 Heating System Controls

It is recommended that the system is controlled by a time switch and room thermostat, proprietary control system or by thermostatic radiator valves. For guidance on the use of thermostat radiator valves refer to the current issue of BS7478.

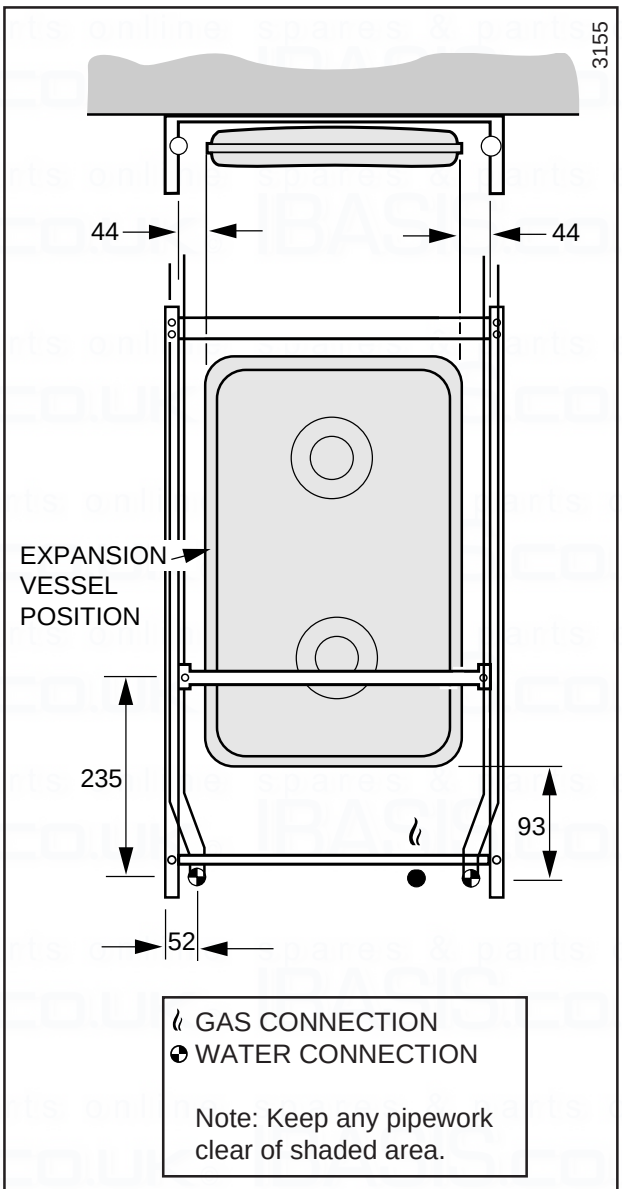

UPWARD ROUTING OF PIPEWORK Diagram 7.2

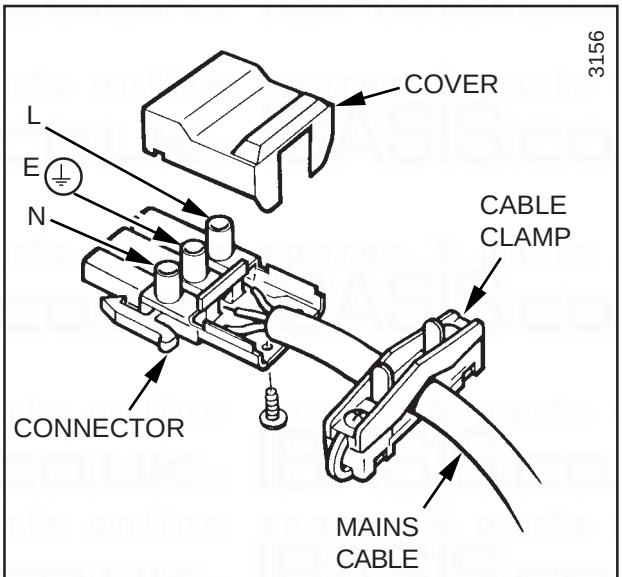

ELECTRICAL PLUG Diagram 7.3

8.1 Mounting the Boiler

After installing the boiler mounting frame, gas and water, making the electrical connections and preparing the flue components continue as below:

Lift the boiler into position, hooking it onto the boiler mounting frame at the top, see diagram 8.1 then loosely fit the two, previously removed, boiler securing screws at the top, see diagram 5.4.

Locate the water pipes into the isolation valves and the gas service cock union halves, see diagram 5.3.

After positioning the location studs into the clips, see diagram 5.4, fully push the boiler back to the mounting frame.

Make the compression joint on the isolating valves and join the gas service cock union. Secure the valves and gas service cock with the securing straps.

Secure the boiler by tightening the two fixing screws at the top.

To fit the discharge pipe to the safety valve, release the single securing screw and pivot forward the fascia and control board assembly (PCB), see diagram 8.2.
Secure the discharge tube with the nut and olive supplied in loose items pack, see diagram 8.2.

Refit fascia control board assembly (PCB).

Connect the plug and socket of the electrical connector together, see diagram 8.3.

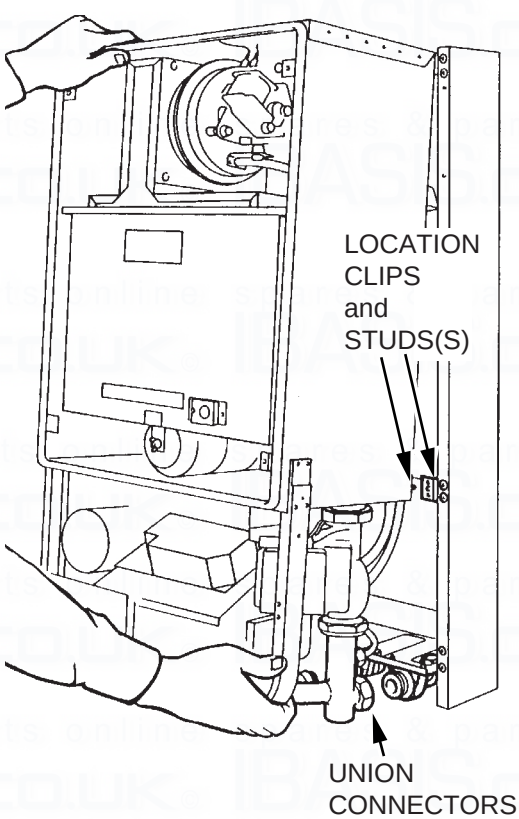

BOILER MOUNTING Diagram 8.1

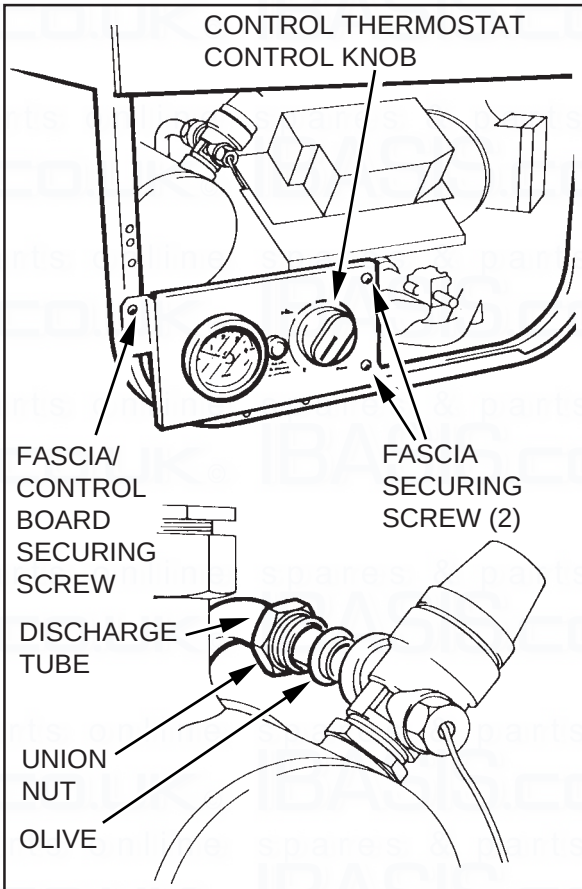

FASCIA / SAFETY VALVE Diagram 8.2

8.2 Flue Assembly to Boiler - Connection

NOTE. The fan could be fittedwith transit clips, see diagram 8.6, which will need removing.

Slacken but do not remove the fan securing screws and flue hood nuts, see diagram 8.4.

Secure the flue assembly to the spigot on top of the boiler, see diagram 8.5.

Tighten the fan securing screws and flue hood nuts previously slackened, see diagram 8.4.

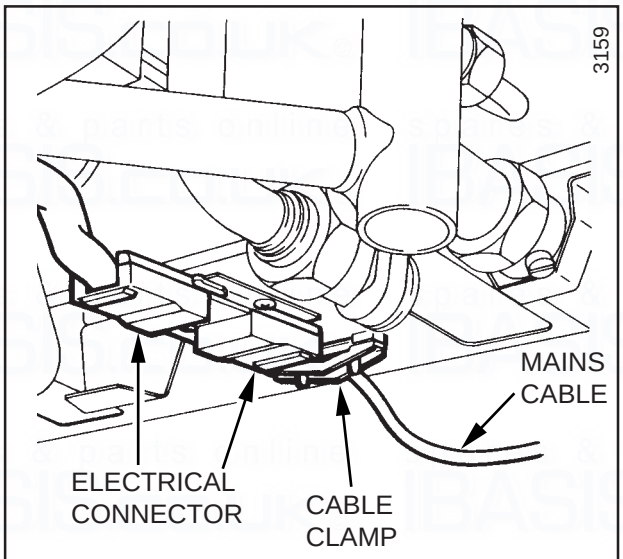

ELECTRICAL CONNECTOR Diagram 8.3

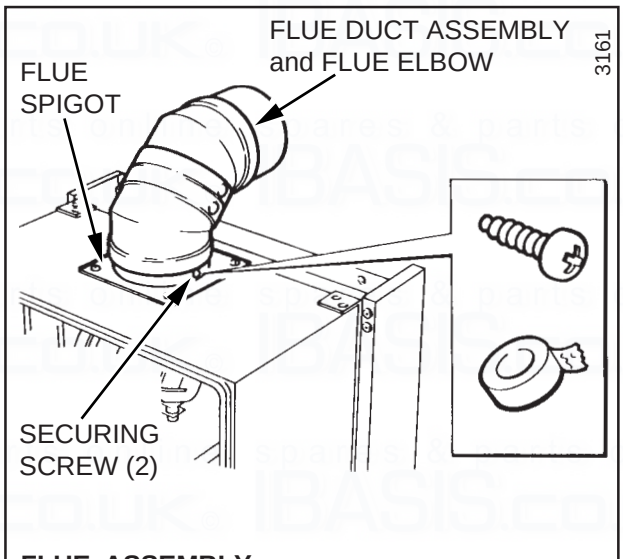

FLUE ASSEMBLY CONNECTION Diagram 8.5

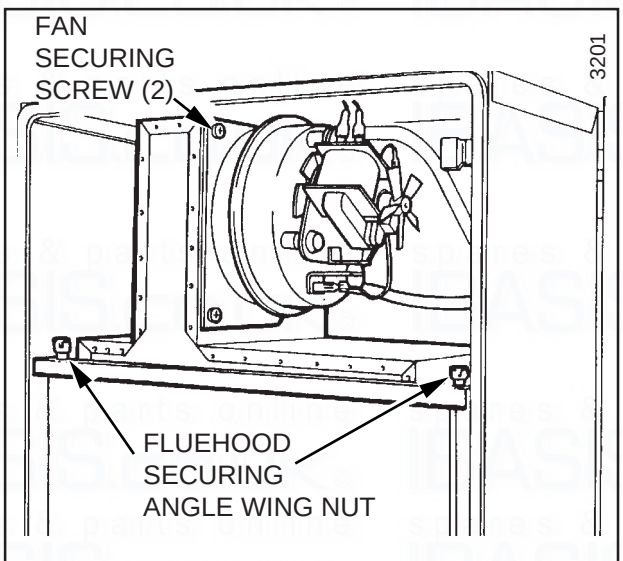

FLUEHOOD / FAN Diagram 8.4

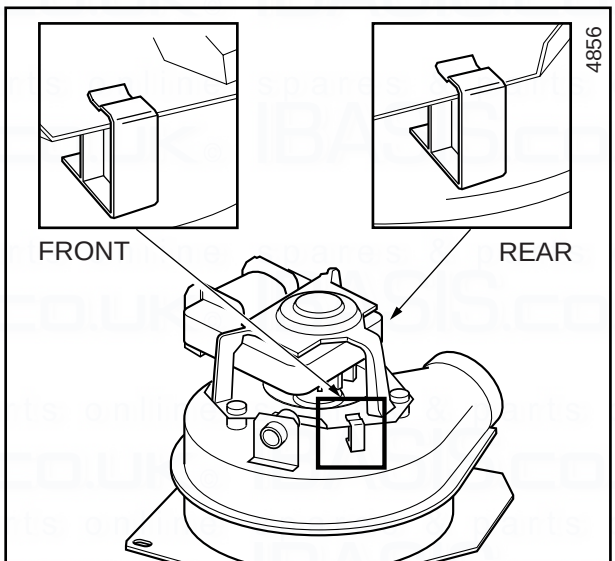

TRANSIT CLIPS Diagram 8.5

9.1 System Commissioning

Commissioning must only be carried out by a competent person in accordance with the current issue of BS6798.

Check that the boiler is isolated from the electrical supply at the external isolator.

Open the two water isolating valves, slots in line with the length of the valves, see diagram 9.1.

Flush out the whole system.

Refill the system, check the operation of the safety valve, by allowing the water pressure to rise until the valve operates. The valve should open within +/-0.3bar (+/-4.3lbf/in^2) of the 3 bar, preset, pressure. Where this is not possible carry out a manual check and test.

Clear any air locks and check for water soundness.

Release cold water to initial system design pressure.

Gas Soundness Test - Pilot

Temporarily disconnect the black cable from the main burner multifunctional control solenoid and insulate the connector with insulation tape to prevent the main burner from lighting.

Turn the gas service cock “On”, the slot in line with the length of the cock, see diagram 9.3.

WARNING: The multifunctional control and fan operate on mains voltage, the terminals will become “Live”.

With the control thermostat control knob in the “O” “Off” position switch on the electrical supply to the system.

Turn the control thermostat control knob fully clockwise to “MAX”, the fan will start, sparks will be generated and the pilot burner will light.

Check around pilot connections for gas soundness with a suitable leak detection fluid.

Turn the control thermostat control knob fully anti-clockwise to “O” and isolate the boiler from the electrical supply.

Remove the insulation tape and refit the black cable to the pilot solenoid valve.

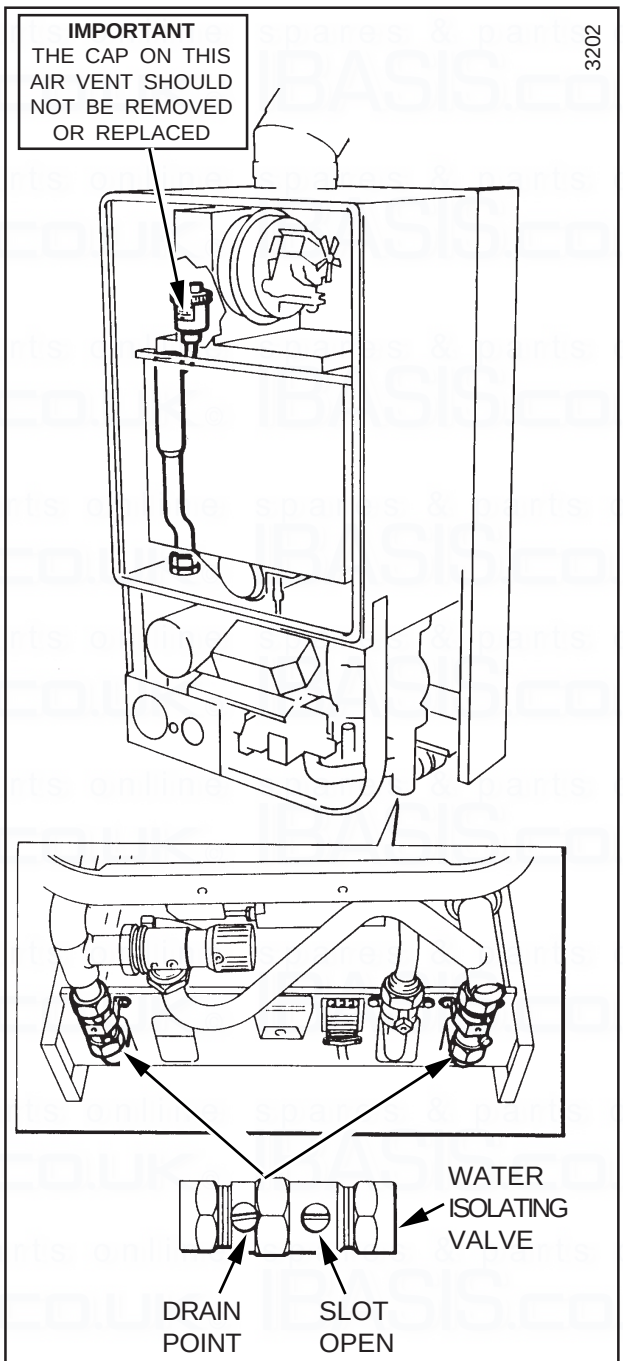

FILLING / VENTING Diagram 9.1

9.2 Initial Lighting and Testing and Adjustment

The set pointer on the pressure gauge should be set to coincide with the cold fill pressure.

Refit the inner case, securing it with the four screws previously removed, see diagram 9.1.

Make sure that the case is correctly fitted and sealed.

Identify the controls by reference to diagram 9.2.

Check that the boiler is isolated from the electrical supply.

Make sure that the control thermostat control knob is turned to “O” the “off” position.

The pilot gas rate is preset and cannot be adjusted.

For future reference attach the self adhesive arrow indicator, from the loose items pack, to the data label against the rating that the boiler is going to be set to.

Remove the main burner pressure test point screw located on the underside of the gas manifold and fit a suitable pressure gauge, see diagram 9.2.

Make sure that any remote controls are calling for heat.

WARNING. The multifunctional control and fan operate on MAINS voltage, terminals will become “LIVE”.

Switch on or connect the electrical supply to the boiler and heating system, neon 1 will light.

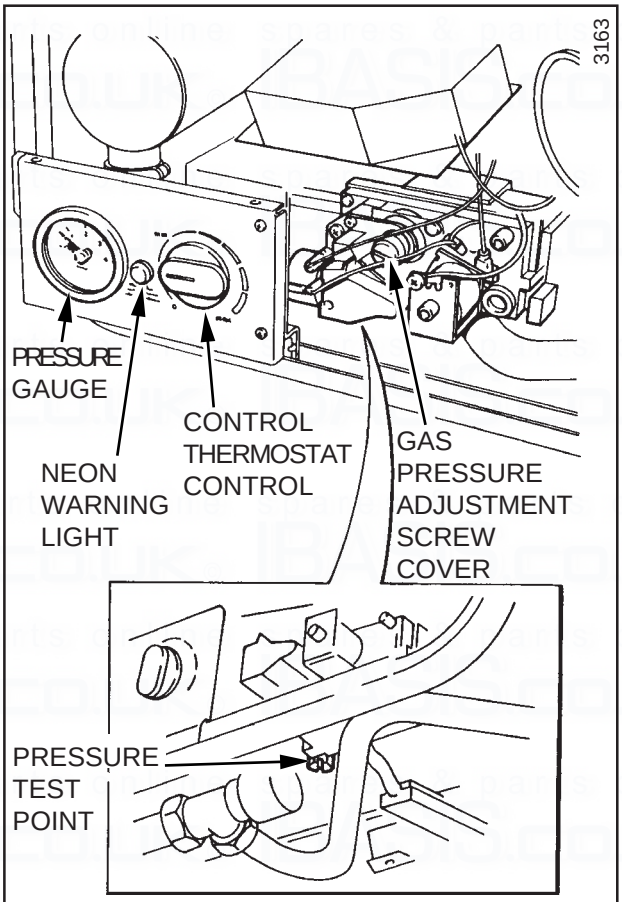

BOILER CONTROLS Diagram 9.2

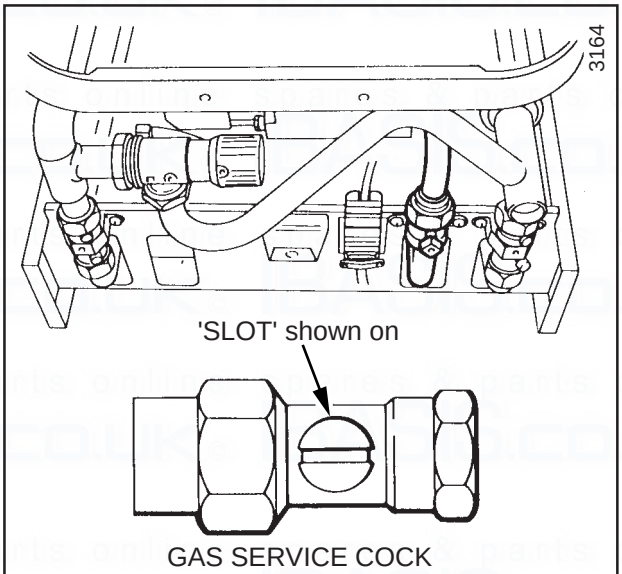

GAS SERVICE COCK Diagram 9.3

9.3 Testing - Electrical

Checks to ensure electrical safety should be carried out by a competent person.

In the event of an electrical fault after installation of the system. preliminary electrical system checks as below should be carried out.

1. Test insulation resistance to earth of mains cable.
2. Test the earth continuity and short circuit of all cables.
3. Switch on the electrical supply to the boiler, neon 1 will light. Test the polarity of the mains supply.

Turn the control thermostat control knob fully clockwise to the maximum setting, which is about 82°C (180°F), neon 2 will light.

Note: The burner will not light between “O” and “MIN”.

The lighting sequence is automatic, as follows:

The fan operates.

The spark ignition operates.
The pilot solenoid opens.
The pilot burner lights.
} neon 3 will light

The ignition spark stops.
The main solenoid opens
} neon 4 will light

and after a short period of time the main burner will light, check this by looking through the viewing window.

The main burner will remain alight until switched off, either by the control thermostat or a remote system control.

To make sure that the flame supervision device is working correctly the following should be done.

1. With the main burner alight, turn the gas service cock “Off”, see diagram 7.1.

   After a short period the main burner and pilot will go out.
2. The correct working of the flame supervision device is shown by neon 4 going out within 10 seconds and the ignition spark starting up.

   Neons 1, 2 and 3 should stay alight.
3. If the above does not happen, refer to fault finding, Section 12.
4. To carry on turn the gas service cock “On”, see diagram 9.3.

When the boiler switches “Off”, both the pilot and main burner go out and the fan stops. The automatic lighting sequence will operate again when heat is required.

The indicator lights on the control board (PCB) are an aid to fault finding, for details, refer to Section 12.

9.4 Testing - Gas

Test for gas soundness around the boiler gas components, using a suitable leak detection fluid.

Check the main burner gas pressure at least 10 minutes after the burner has lit, refer to Data label or Appliance Data, Table 2.

If the gas pressure requires adjustment, remove the screw cover, see diagram 9.2 for access to the main burner pressure adjustment screw. Adjust the gas pressure to obtained the required setting (turn anti-clockwise to decrease).

Should any doubt exist about the gas rate, check it using the gas meter test dial and a stop watch, at least 10 minutes after the burner has lit, make sure that all other gas burning appliances and pilot lights are off.

The rates are as shown in Table 4.

Turn the control thermostat knob to “O” “Off”. Remove the pressure gauge from the test point and refit the screw, ensuring that a gas tight seal is made.

When the control thermostat is turned to “O” “Off” position, by hand, wait at least 30 seconds before turning “On” again.

There may be an initial smell given off from the boiler when new, this is quite normal and will disappear after a short period of time.

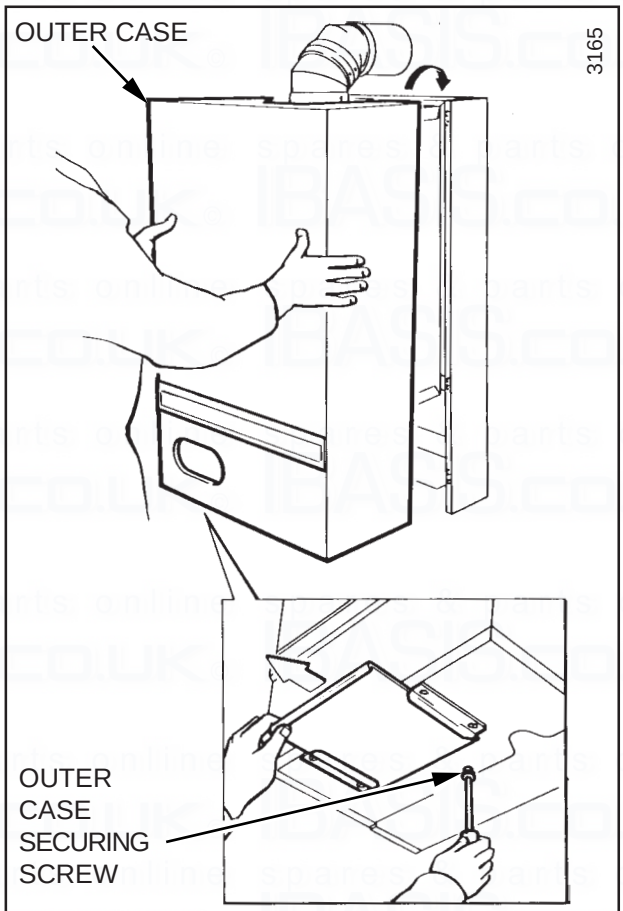

CASE SECURING Diagram 9.4

9.5 Heating System

Check that all remote controls are calling for heat.

Allow the system to reach maximum working temperature and examine for water leaks. The boiler should then be turned off and the system drained as rapidly as possible whilst still hot.

Refill the system, vent and again check for water soundness.

Adjust the system to initial design pressure. The set pointer on the pressure gauge should be set to coincide with the indicating pointer.

9.6 Operational Checks

Adjust the control thermostat and any system controls to their required settings.

Do not attempt to adjust the thermostat calibration screw.

Operate the boiler again on full service and check that the balancing is satisfactory, make adjustments as necessary.

Refit the outer case, see diagram 9.4, slide the information plate forward and secure the case with the screw previously removed.

TABLE 4

APPROX.GAS RATE		min	med	max
MODEL 65	m^3/h	1.9	2.1	2.2
	ft^3/h	67.4	73.4	79.2
MODEL 80	m^3/h	2.3	2.5	2.8
	ft^3/h	81.5	89.9	97.6

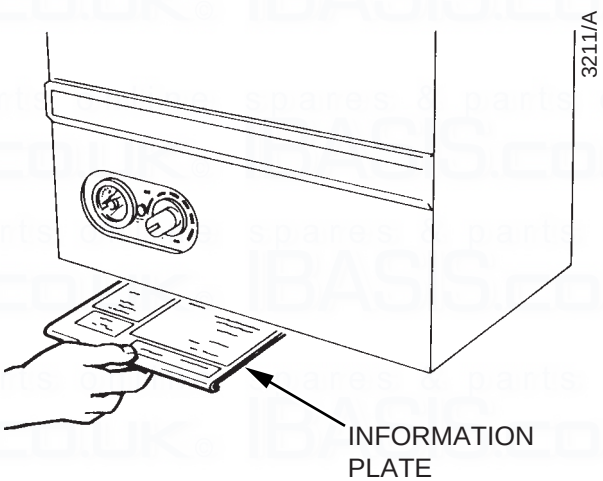

INFORMATION PLATE Diagram 9.5

10 Instructions to the User

Hand the Instructions for Use to the user for their retention.

Instruct and demonstrate the efficient and safe operation of the boiler, heating system and if fitted, the domestic hot water system.

Show the user the position of “Lighting Instructions” by reference to diagram 9.5.

Advise the user of the precautions necessary to prevent damage to the system and building in the event of the heating system being out of use during frost and freezing conditions.

Advise the user, that to ensure the continued efficient and safe operation of the boiler it is recommended that it is checked and serviced at regular intervals.
The frequency of servicing will depend upon the particular installation conditions and usage, but in general once a year should be enough.

Draw attention, if applicable, to the current issue of the Gas Safety (Installation and Use) Regulations, Section 35, which imposes a duty of care on all persons who let out any property containing a gas appliance.

It is the Law that servicing is carried out by a competent person.

Reminder, leave these instructions with the user.

11.1 Notes

To ensure the continued efficient and safe operation of the boiler it is recommended that it is checked and serviced at regular intervals. The frequency of servicing will depend upon the particular installation conditions and usage, but in general once a year should be enough.

It is the Law that any servicing must be carried out by a competent person.

Unless stated otherwise, parts removed for servicing should be replaced in the reverse order to removal.

After completing any servicing of gas carrying components, ALWAYS test for gas soundness and carry out functional check of controls.

Slide the information plate forward and remove the outer case securing screw, see diagram 9.5 and lift the case off.

Before starting any servicing, isolate the boiler from the electrical supply at the external isolator and close the gas service cock, see diagram 9.3.

As an aid to Servicing the air pressure switch tube connection can be used to obtain a products of combustion reading.

Remove the RED tube from the connection on the air pressure switch and insert the analyser probe into the tube.

WARNING. The electrical components work on mains voltage and they will become live.

Switch on the electrical supply to operate the fan and turn the gas supply on.

On satisfactory completion of the test, switch off the electrical and reconnect the red tube to the air pressure switch.

Routine Servicing

11.2 Inner Case

Remove the cover of the inner case, secured with four screws.

11.3 Pilot Check

Check that the pilot flame is burning correctly and of the correct size, see diagram 11.1. If the pilot flame is not correct, the pilot injector will require removing, see Section 11.7.

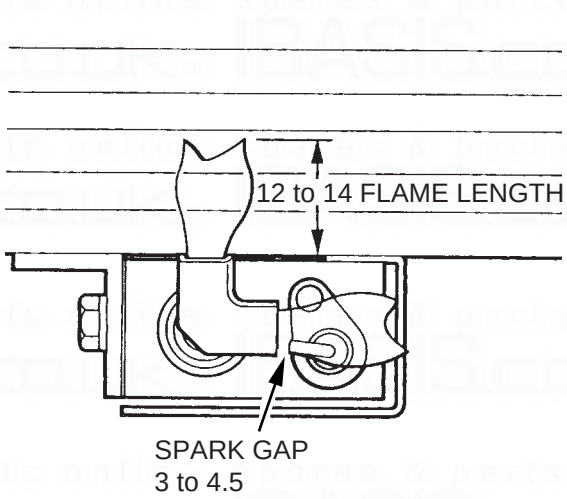

PILOT FLAME AND SPARK GAP DIMENSION Diagram 11.1

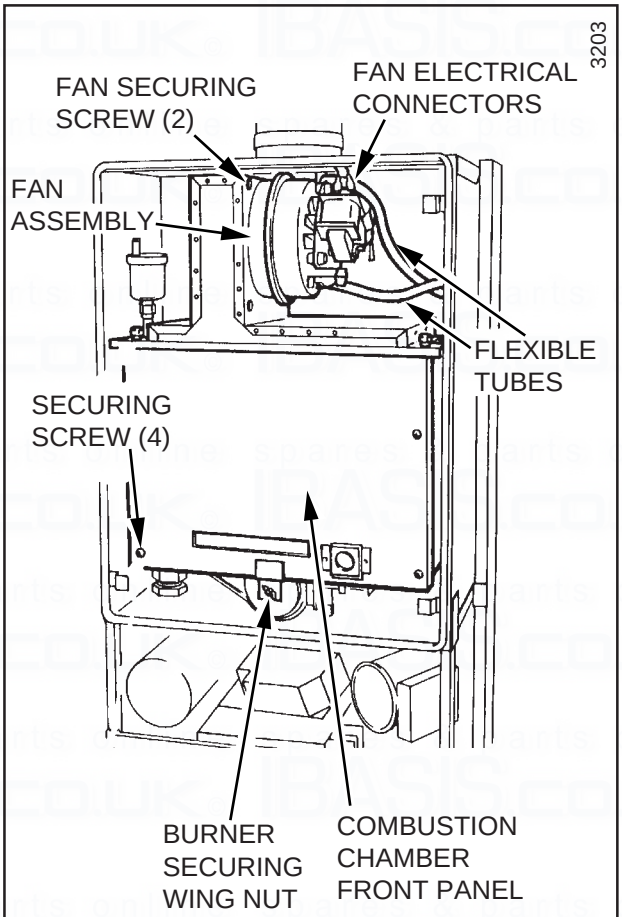

COMBUSTION CHAMBER Diagram 11.2

11.4 Main Burner

Slacken the flue hood securing angle nuts, see diagram 11.2.

Remove the combustion chamber front panel, secured with four screws and a wing nut, see diagram 11.2.

Disconnect the pilot pipe union connector and ignition lead, see diagram 11.3

Separate the pilot assembly from the main burner, secured with two screws, see diagram 11.3.

Remove the main burner from the main injector at the rear. Raise the burner up and forward, easing the pilot pipe down, to clear, take care not to damage the combustion chamber insulation or the pilot burner assembly.

Use a vacuum cleaner or suitable stiff brush to clean the burner thoroughly, making sure that all the burner ports are clear and unobstructed.

Do not use a brush with metallic bristles.

Note. On refitting and after cleaning the heat exchanger make sure the main burner is fitted correctly, that is, located on the main injector and horizontal, see diagram 11.4.

11.5 Main Injector

With the main burner removed the main injector can be inspected and cleaned as necessary.

If removing for cleaning do not use a wire or sharp instrument on the hole.

Use new seal when refitting to ensure a gas tight seal is made.

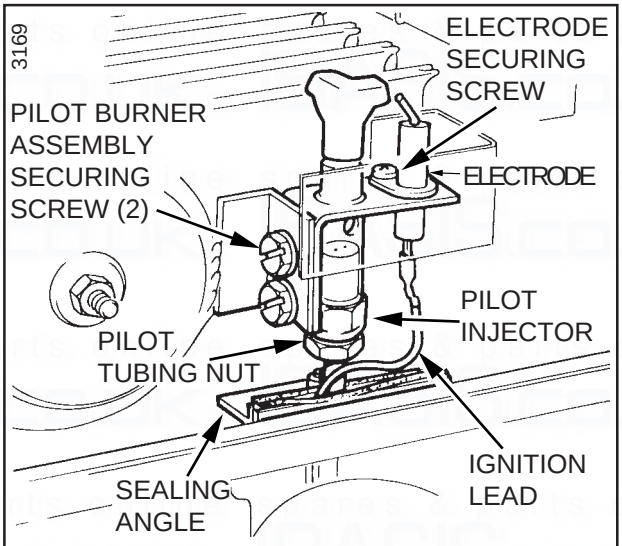

PILOT BURNER ELECTRODE ASSEMBLY Diagram 11.3

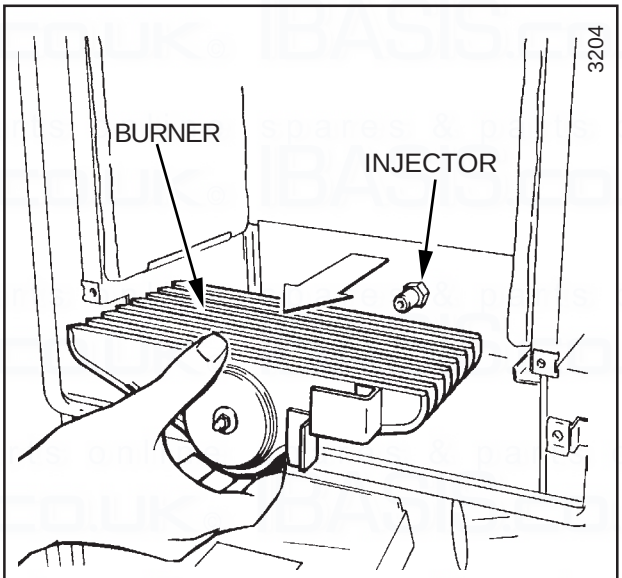

BURNER REMOVAL Diagram 11.4

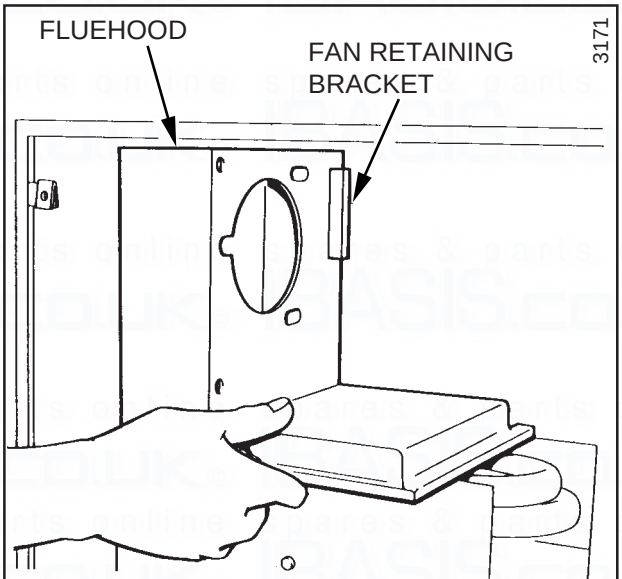

FLUEHOOD Diagram 11.5

11.6 Cleaning Heat Exchanger.

Disconnect the two electrical connections at the fan, see diagram 11.2. It is not necessary to disconnect the green and yellow earth cable.

Disconnect the two flexible tubes from the fan, see diagram 11.2.

Remove the fan by releasing the securing screws, see diagram 11.2.

Remove the flue hood securing bracket, secured with two nuts and hook bolts, see diagram 11.2.

Remove the flue hood, see diagram 11.5.

Remove the burner as Section 11.4.

Cover the pilot assembly and main injector and place a sheet of paper in the combustion chamber to catch any debris.

Brush the heat exchanger with a suitable brush.

Do not use a brush with metallic bristles.

Remove the paper and cover from the pilot assembly and main injector together with any debris.

When replacing, please note:

(a) Locate the fan mounting plate assembly behind the retaining bracket at the same time easing the fan outlet into the flue elbow, see diagram 11.5.

(b) Make sure the coloured flexible tube connects to the upper connection on the fan.

(c) The polarity of the two fan electrical connections is not important.

11.7 Pilot Injector

If the pilot flame is not burning correctly, it may be necessary to remove the pilot injector.

Unscrew the pilot injector from the pilot assembly.

Inspect the injector and if necessary clean only by blowing clear.

Do not use wire or sharp instrument.

When relighting check that the flame length is as shown in diagram 11.1.

11.8 Operational Checks

Check the safety valve manually by turning the knob in the direction of the arrow.

Light the boiler, carry out operational checks and any necessary adjustments as described in the Commissioning Section 9 of these instructions.

12 Fault Finding

12.1 Electrical

Important. On completion of the Service/Fault Finding task which has required the breaking and remaking of the electrical connections the earth continuity, polarity, short circuit and resistance to earth checks must be repeated using a suitable multimeter.

Refer to: Neon Indicators - Aid to Fault Finding, diagram 12.1, Fault Finding, diagram 12.2 Wiring, diagram 12.5 and Functional Flow diagram 12.3.

12.2 Electrical Supply Failure

Failure of the electrical supply will cause the burner to go out. Operation will normally resume on restoration of the electrical supply. If the boiler does not relight after an electrical supply failure the overheat cutoff device may need resetting.

To reset, pull the information panel forward on the underside of the boiler and press the reset button, see diagram 12.4.

If the cutoff operates at any other time press the reset button and the burner should relight. If the fault persists refer to Fault Finding, diagram 12.2.

Neon Indicators - An Aid to Fault Finding

THE NEON INDICATORS ARE AN AID TO FAULT FINDING ONLY.
FAILURE OF ANY OF THE NEON INDICATORS DOES NOT WARRANT THE REPLACEMENT OF AN OTHERWISE SATISFACTORY PRINTED CIRCUIT BOARD (PCB).
IF RED NEON ON FASCIA IS ILLUMINATED FILL CENTRAL HEATING SYSTEM, PRESSURE 0.7bar MIN.

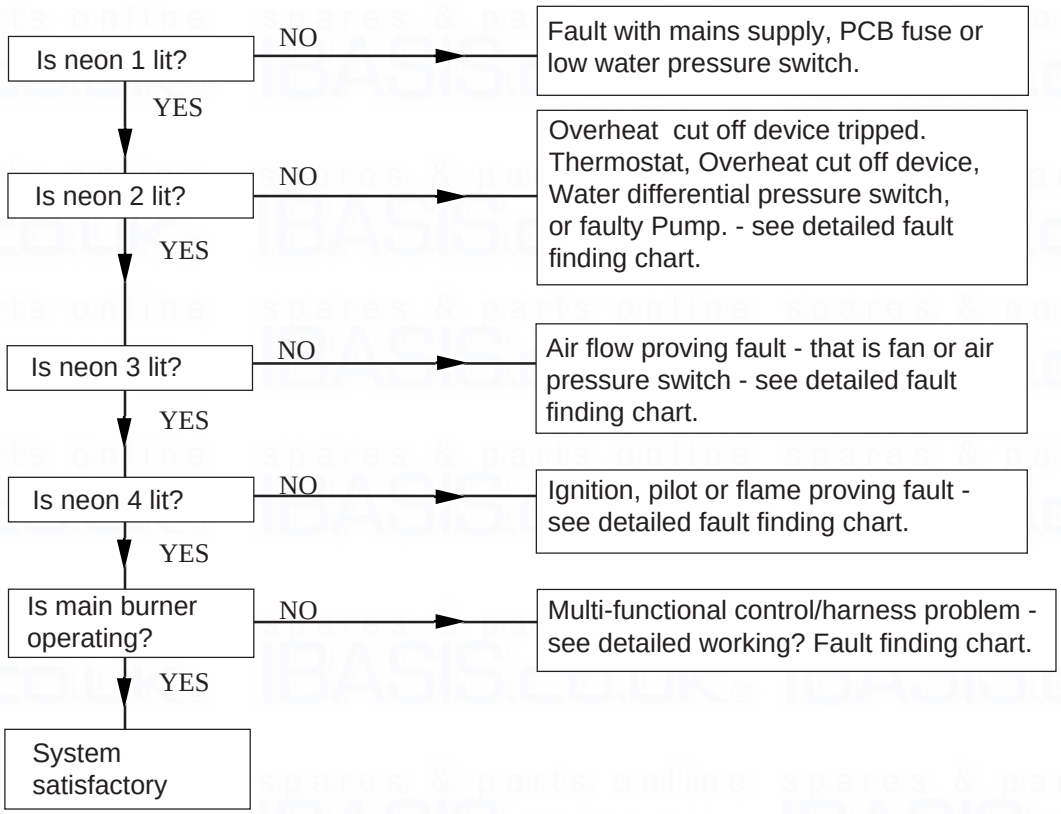

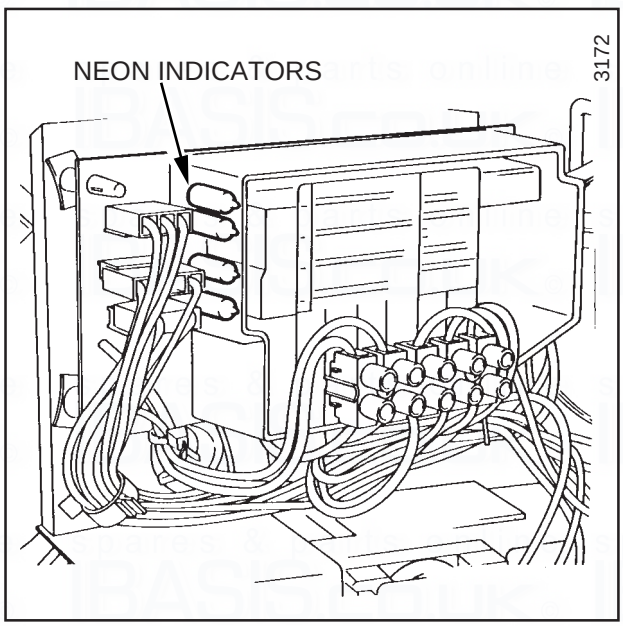

NEON INDICATORS Diagram 12.1

Before detailed checking of electrical components ensure that remote controls are calling for heat. Check that the gas supply is free of obstructions and purged of air. Isolate the elctrical supply, check all cables, connections and the printed circuit board (PCB) fuse. Check the air tubes to the air pressure switch for kinks and splits. Switch on the electrical supply and check for correct polarity. If red neon on the fascia is illuminated isolate the elctrical supply and pressurise the sytem to 0.7bar minimum with the sytem cold. Switch on the electrical supply. Turn the control thermostat to its maximum setting.

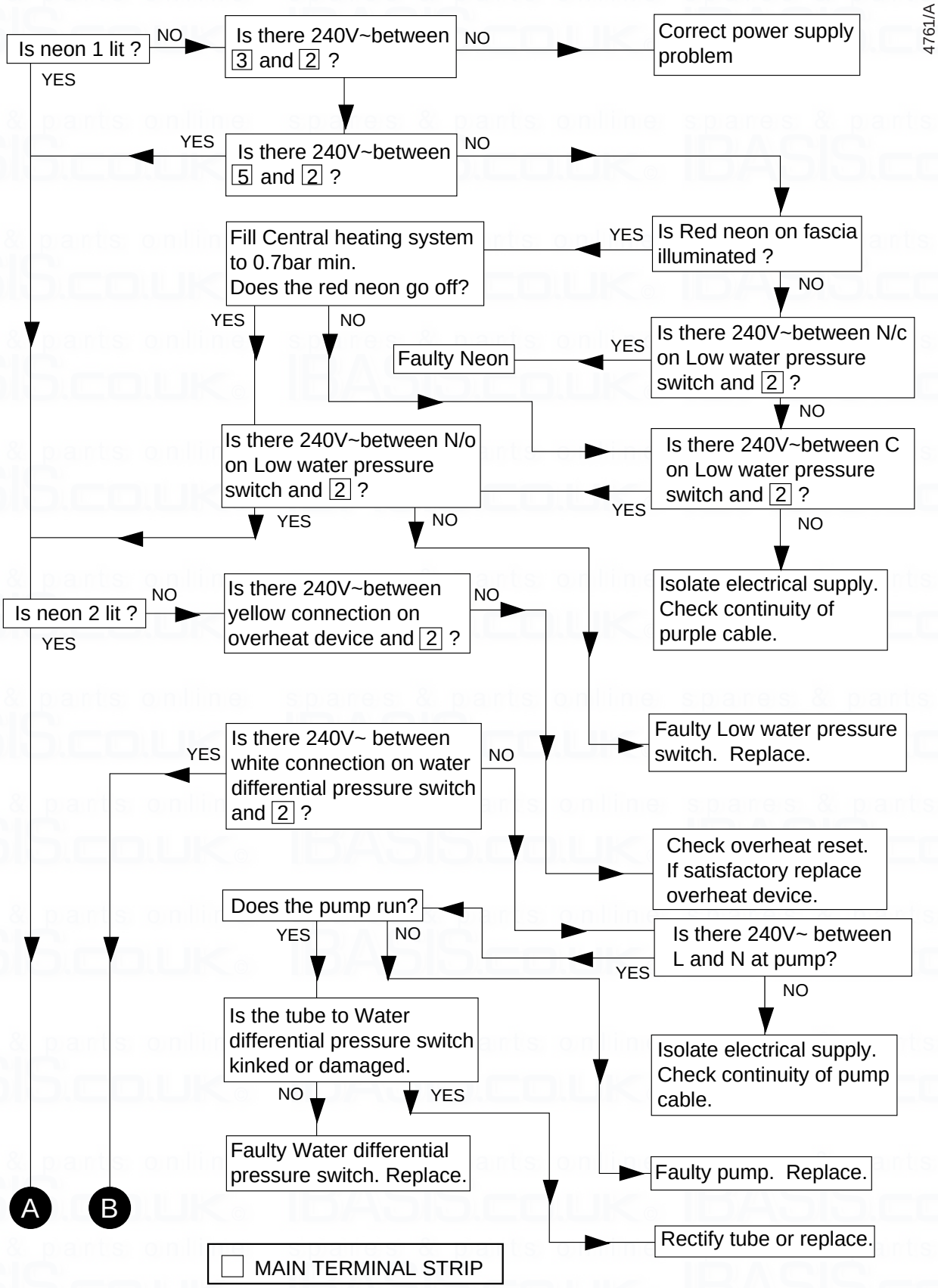

Diagram 12.2

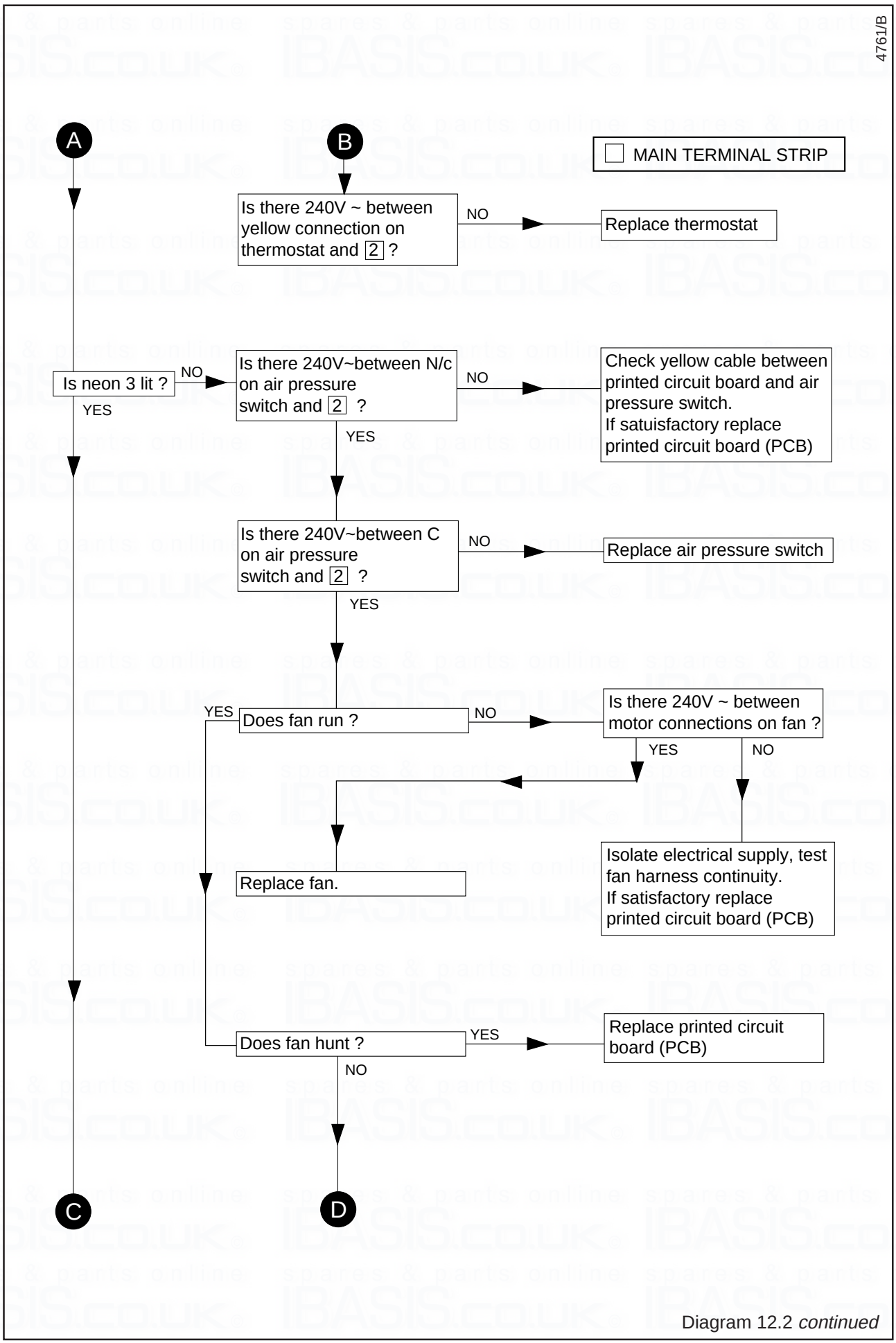

Diagram 12.2 *continued*

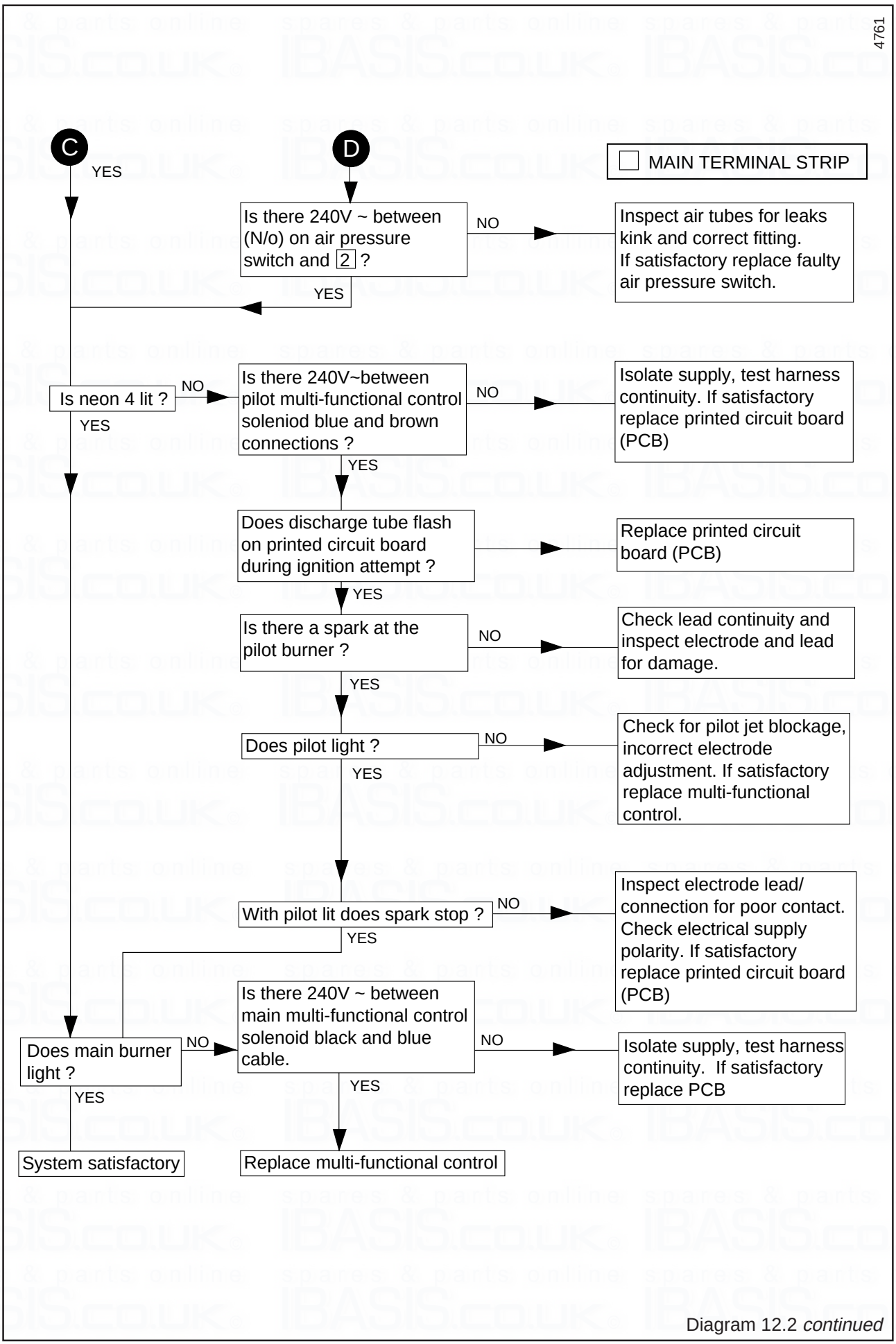

Diagram 12.2 *continued*

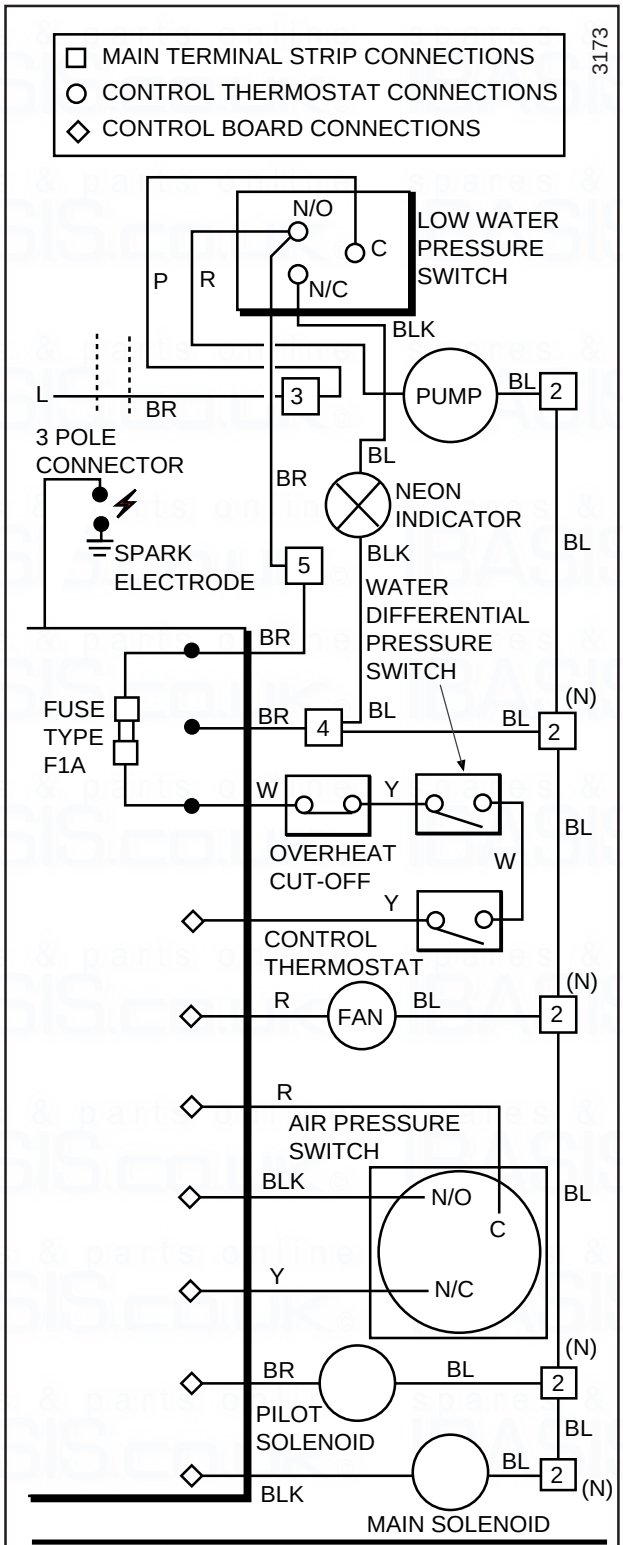

NOTE: LOW WATER PRESSURE SWITCH SHOWN IN UNPRESSURISED STATE

KEY	
BLK	BLACK
BR	BROWN
BL	BLUE
W	WHITE
R	RED
Y	YELLOW

FUNCTIONAL FLOW Diagram 12.3

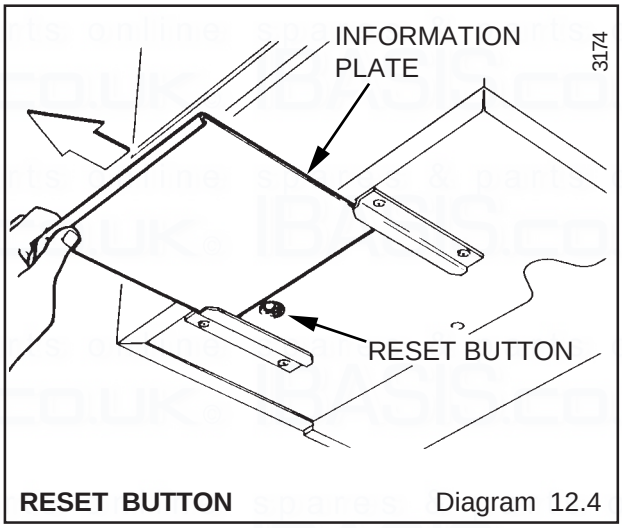

RESET BUTTON Diagram 12.4

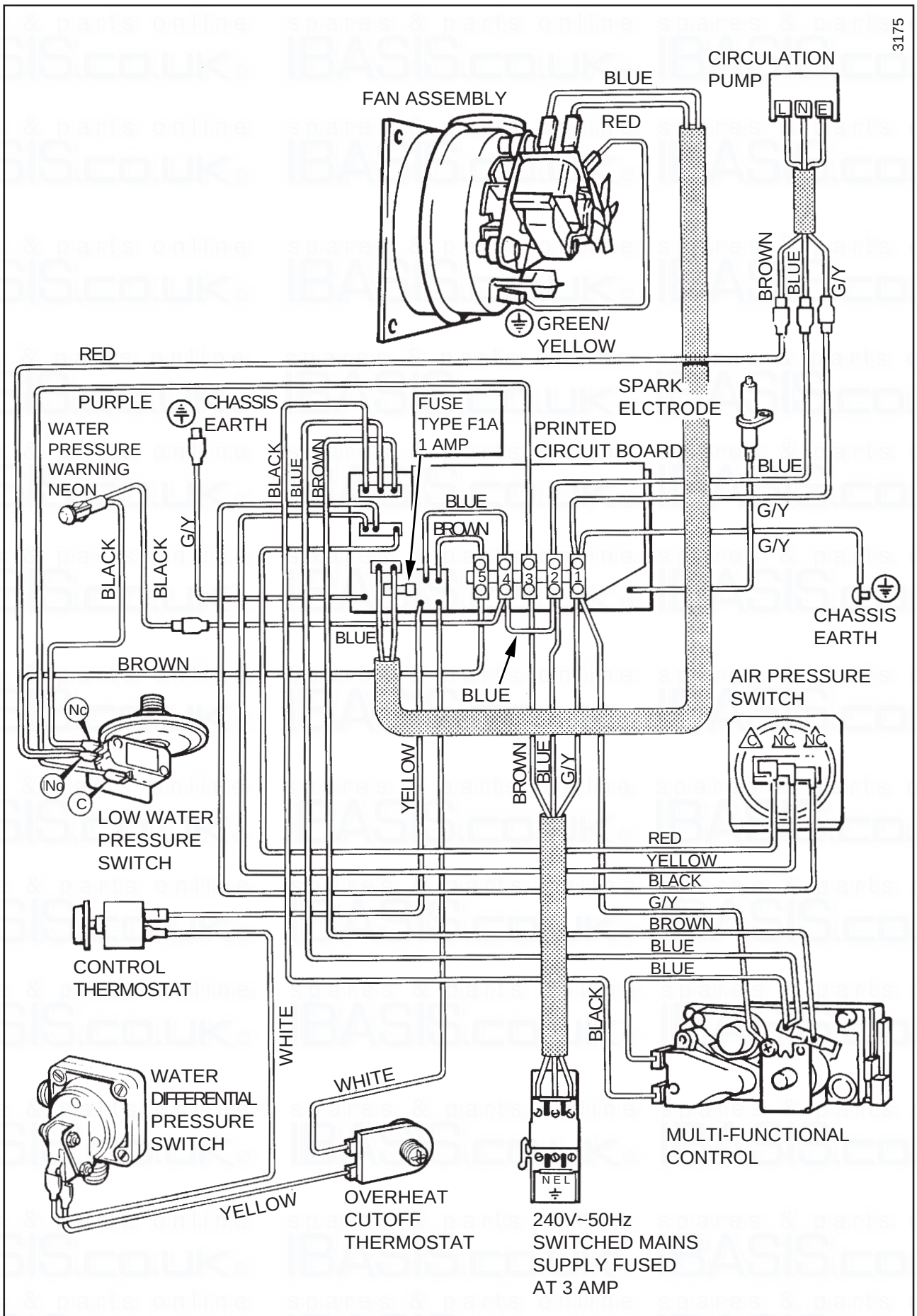

PICTORIAL WIRING Diagram 12.5

13 Replacement of Parts

13.1 Replacement of parts must only be carried out by a competent person.

Before replacing any part isolate the gas and electrical supplies.

Unless stated otherwise all parts are replaced in the reverse order to removal.

13.2 Access

Slide the information plate forward, remove the securing screw and remove the case, see diagram 9.4.

Unless stated otherwise gain access as Sections 11.2 and 11.4.

13.3 System Pressure and Draining

All parts containing water within the boiler are under system pressure. Before any parts are disconnected, close the isolating valves and reduce the boiler pressure at the integral drains on the isolating valves, see diagram 9.1.

After replacing any water containing part of the central heating circuit, make up the water loss, vent all air and pressurise the system. Refer to Commissioning.

After replacing any gas carrying parts always test for gas soundness and if necessary carry out functional check of controls.

13.4 Fan

Remove as the relevant part of Section 11.6

13.5 Main Burner

Remove as Section 11.4

13.6 Main Injector

Remove as Section 11.5.

Unscrew the main injector.

When fitting the main injector, fit the sealing washer, supplied, to ensure gas soundness.

13.7 Pilot Burner

Remove as the relevant part of Section 11.4.

13.8 Electrode

Gain access as the relevant part of Section 11.4.

Disconnect the ignition lead from the electrode, see diagram 11.3.

Remove the electrode, secured with a single screw.

Check the spark gap upon assembly, see diagram 11.1.

13.9 Pilot Injector

Gain access as the relevant part of Section 11.4 and proceed as Section 11.7.

When relighting check that the flame length is as shown in diagram 11.1.

NOTE: For Sections 13.10, 13.11, 13.13, 13.14, 13.15, 13.17, 13.18, 13.25 and 13.26, 13.27 and 13.28 release fascia and control board (PCB) assembly by removing the screw and pivot forward, see diagram 8.2.

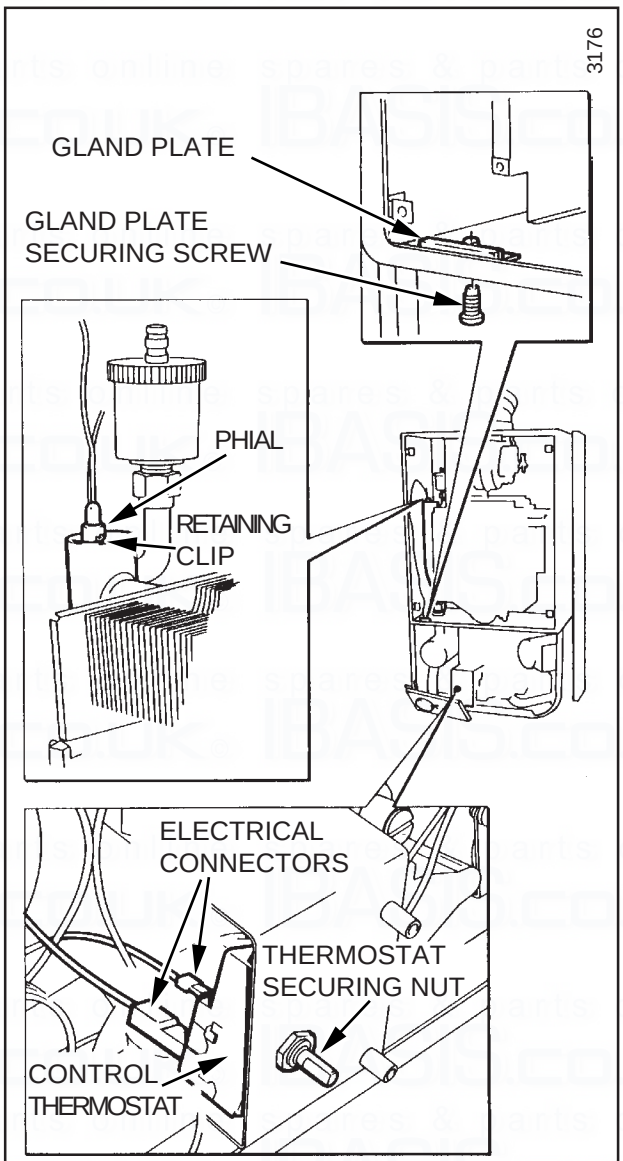

CONTROL THERMOSTAT Diagram 13.1

13.10 Control Thermostat

Gain access as Section 13.2.

Remove the control knob and fascia by removing the screw, see diagram 8.2.

Remove the thermostat securing nut, see diagram 13.1.

Remove the electrical connections from the thermostat body.

Now remove the phial retaining pin and then the thermostat phial from the pocket, see diagram 13.1.

When refitting, make sure that the thermostat capillary is correctly routed and the phial covered with heat sink compound, before it is secured in the pocket, by the phial retaining clip.

Reconnect the electrical connections, see diagram 12.5.

13.11 Overheat Cutoff: diagram 13.2

Remove the electrical connections from the cutoff body.

Remove the capillary securing clamp.

Remove the locknut securing the overheat cutoff to the bracket and withdraw the assembly.

When replacing use the heat sink compound provided.

13.12 Ignition Lead: diagram 11.3

Slacken but do not remove the sealing angle securing screw.

Disconnect the ignition lead at both ends and withdraw.

When refitting push the lead through the seal from the top and make sure that the clear end is fitted to the spark electrode and that the lead follows the same route, being secured in the same manner, as the original.

Take care not to damage the seal of the sealing angle.

13.13 Pressure Gauge: diagram 13.3

Release the water pressure and drain the boiler, refer to Section 13.3.

Disconnect the pressure gauge connection from the safety valve, discard the washer.

Remove the pressure gauge secured with the retaining spring tabs from the bracket.

Fit the supplied washer under the pressure gauge connection when refitting to the safety valve.

13.14 Safety Valve: diagram 13.3

Release the water pressure and drain the boiler, refer to Section 13.3.

Remove the pressure gauge connection as Section 13.3.

Disconnect the union nuts to release the discharge pipe.

Place a spanner on the hexagon on the volume vessel and break the union nut connection to release and then unscrew the safety valve.

When refitting use a proprietary sealant to seal the joint.

When fitting use a new washer for the pressure gauge connection.

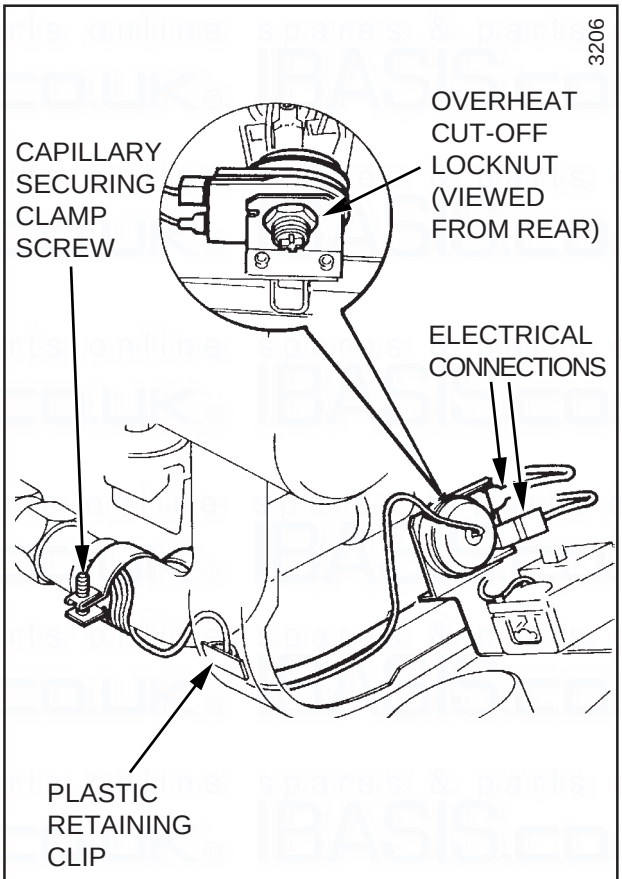

OVERHEAT CUT-OFF Diagram 13.2

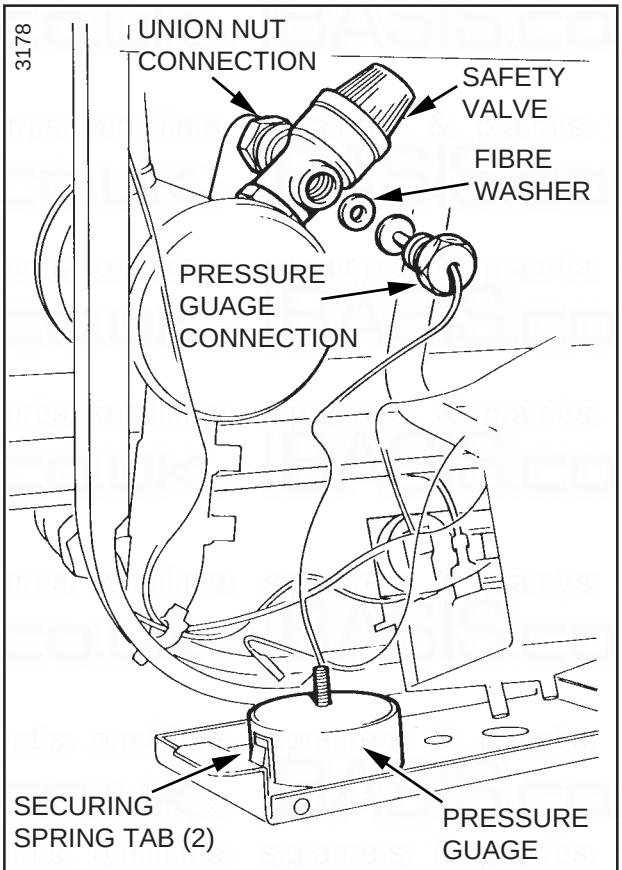

SAFETY VALVE / PRESSURE GAUGE Diagram 13.3

13.15 Water Differential Pressure Switch: diagram 13.4

Release water pressure as Section 13.3.

Remove the two electrical connections and release the union connections and remove the pressure switch, complete with flexible tubing.

Fit the flexible tubing to the new pressure switch.

Refer to diagram 12.5 when remaking the electrical connections.

13.16 Low Water Pressure Switch: diagram 13.5

Release the water pressure and drain the boiler, refer to Section 13.3.

Disconnect the electrical connectors at the pressure micro-switch.

Remove the pressure switch.

Use a proprietary sealant to seal the connection.

Make sure that the switch is positioned as shown in diagram.

Refer to wiring diagram 12.5 when making the electrical connections.

13.17 Control Board (PCB): diagram 13.6

Disconnect all multi-pin connectors.

Remove the blue and brown cables from terminals 4 and 5 also disconnect the yellow cable from the control thermostat and the white cable from the overheat cutoff and the chassis earth cable.

Remove the terminal block and cables complete.

Remove the printed circuit board from the support posts, noting their correct positions. Great care must be taken when handling the board.

To connect the multi-pin connectors and terminal block correctly, refer to diagram 12.5.

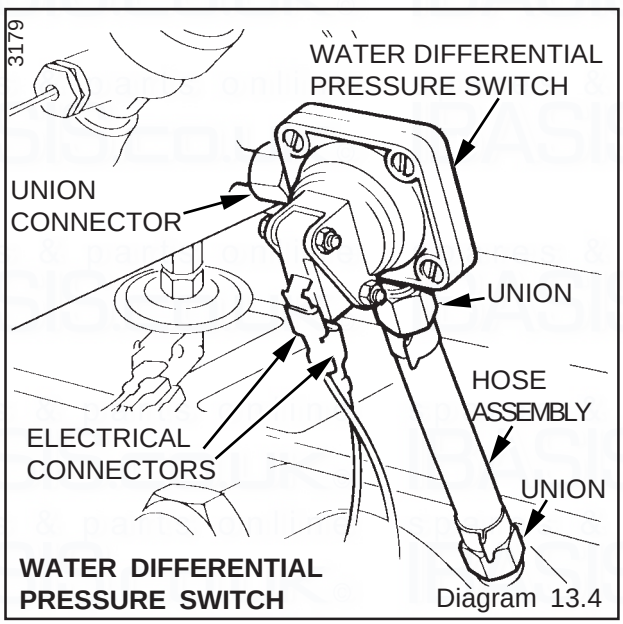

WATER DIFFERENTIAL PRESSURE SWITCH Diagram 13.4

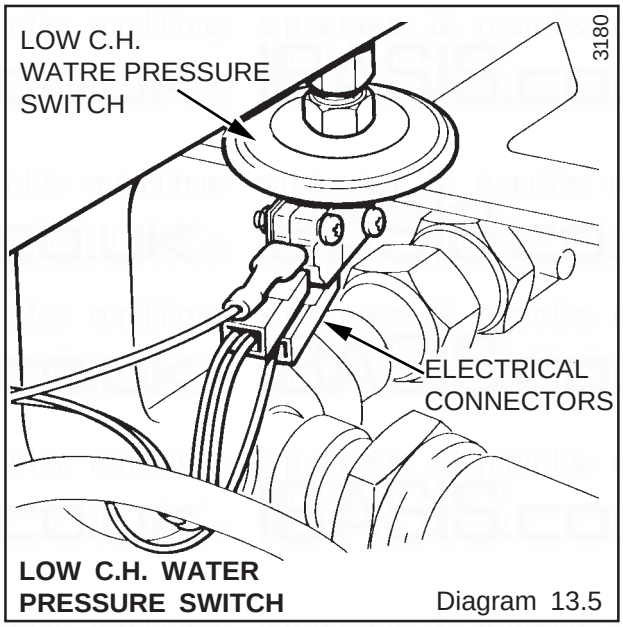

LOW C.H. WATER PRESSURE SWITCH Diagram 13.5

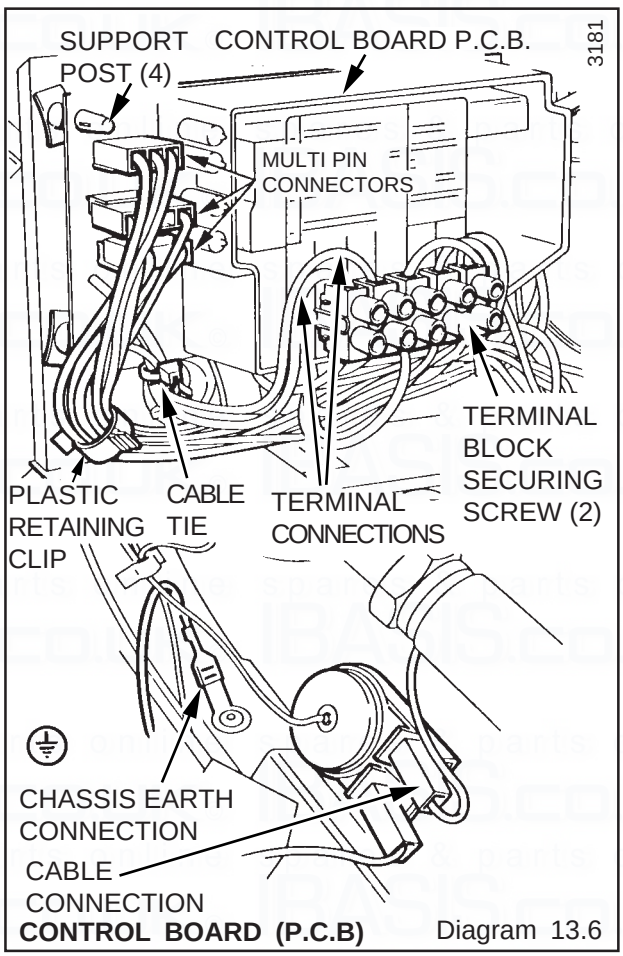

CONTROL BOARD (P.C.B) Diagram 13.6

13.18 Multifunctional Control and Pilot Solenoid: diagram 13.7

Disconnect all electrical connections at the multifunctional control.

Remove the four securing screws from the left hand side of the multifunctional control and pilot pipe, take care as there is a restrictor in this pipe.

Support the multifunctional control, disconnect the union nut of the gas service cock and remove the multifunctional control complete with inlet pipe.

Separate the multifunctional control from the pipe, four screws, noting the fitted position.

Discard the “O” rings and fit the new ones supplied.

To reconnect the connections refer to diagram 12.5.

Light and adjust the boiler as necessary, refer to Section 9.

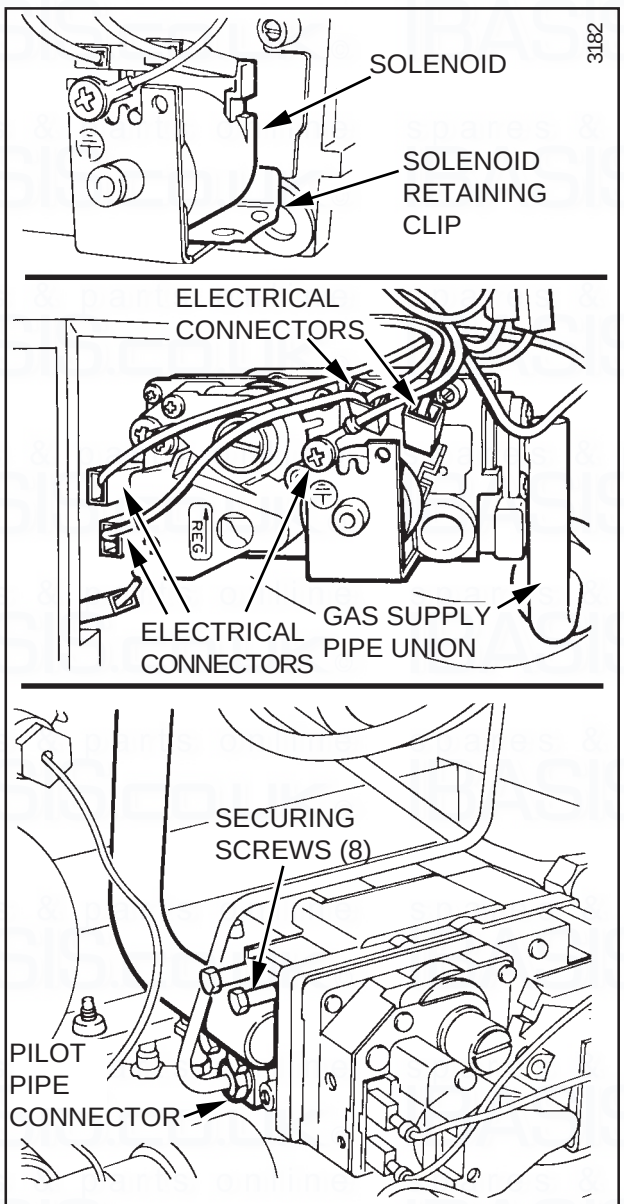

MULTI-FUNCTIONAL CONTROL Diagram 13.7

Pilot Solenoid

Disconnect the electrical connections at the solenoid, remove the retaining clip and solenoid.

When reconnecting refer to diagram 12.5.

13.19 Pump: diagram 13.8

Release the water pressure and drain, refer to Section 13.3.

Disconnect the “in-line” connections at the pump.

Disconnect the pump at the union connections.

Discard the sealing washers and fit the new ones supplied.

When fitting the replacement make sure that the flow direction arrow is pointing upward.

Set the flow adjuster to position 3, see Section 2.6.

Note: Should the pump fail to operate and all is in order but the pump still does not operate, remove the end screw, turn the pump spindle to release any temporary seizure. DO NOT HIT THE SPINDLE.

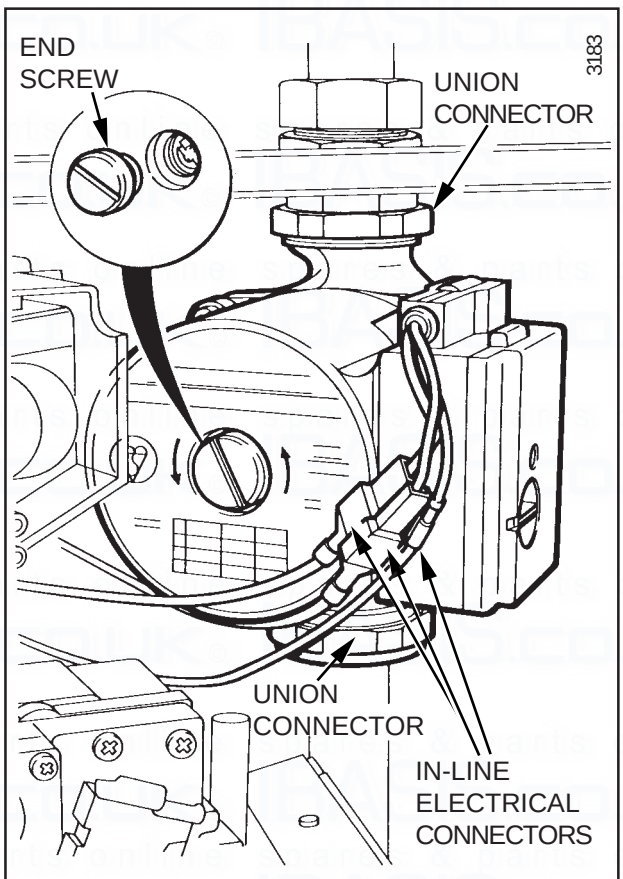

PUMP Diagram 13.8

13.20 Automatic Air Vent: diagram 13.9

Release the water pressure as Section 13.3.

Remove the automatic air vent.

Discard the sealing washer and use the new one supplied.

Slacken the vent cap on the air vent of the new item.
This cap must not be re-tightened.

13.21 Heat Exchanger: diagram 13.9

Isolate the boiler from the gas and electrical supplies.

Remove all the necessary internal parts.

Fit the automatic air vent to the new heat exchanger, using the new washer provided.

Disconnect the union nuts at the heat exchanger.

When fitting new heat exchanger use the new sealing washers provided.

Locate the raised location tabs on the combustion chamber sides into the slots on the heat exchanger when fitting it.

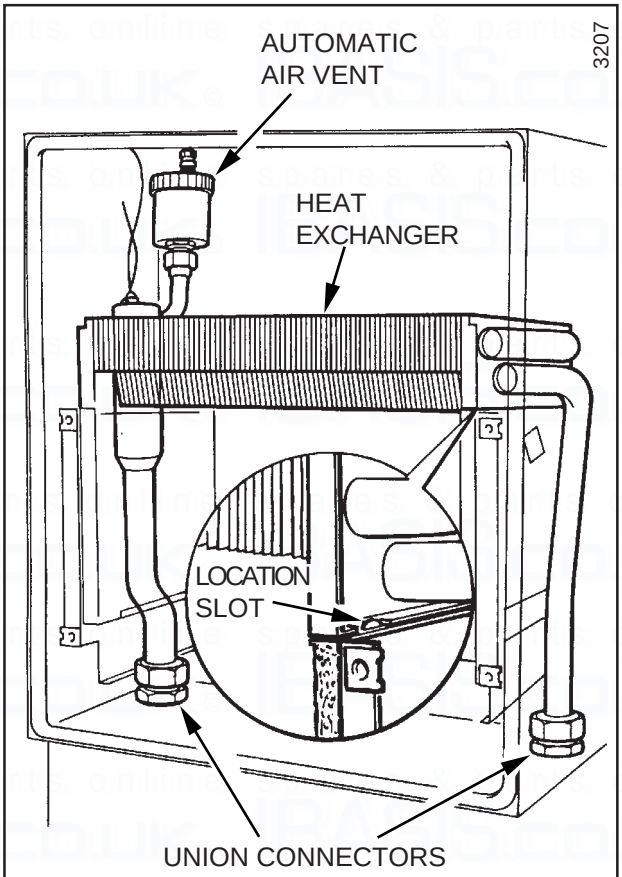

HEAT EXCHANGER Diagram 13.9

13.22 Combustion Chamber Insulation: diagram 13.10

Remove the securing clip and insulation panel.

Take care when sliding the replacement insulation into position securing it with the original clip.

The rear insulation is in two pieces, after removal of the side insulation panels, the lower and upper rear insulation can be removed.

13.23 Expansion Vessel: diagram 13.11

Renewal of the expansion vessel requires the removal of the boiler from the wall. As an alternative, in certain circumstances, a separate expansion vessel of the same specification may be connected as close as possible to the boiler, leaving the original in position.

Isolate the boiler from the gas and electrical supplies.

Release the water pressure and drain, as Section 13.3.

Remove the fan from the flue hood, see Section 11.6.

Disconnect the flue elbow, by reversing the instruction in Section 8.2.

Disconnect the boiler water connections union nuts, see diagram 5.3.

Disconnect the gas service cock, see diagram 5.3.

Disconnect the electrical plug, see diagram 8.3.

Remove the boiler from the mounting frame secured with two screws at the top, see diagram 5.4. Pull the boiler from the isolating valves and clips at the bottom. Unhook the boiler at the top and withdraw it forward.

Carefully lay the boiler down on its side to gain access to the expansion vessel.

Disconnect the union nut connection.

Remove the expansion vessel, secured with two clamps.

Discard the sealing washers and use the new ones supplied.

Connect the union nut, when fitting the expansion vessel, before clamping it.

13.24 Pilot Viewing Window: diagram 13.12

Remove the two screws and then the window.

When replacing take care not to damage the gasket.

13.25 Inner Case Seal: diagram 13.12

Gain access as Section 13.2.

When removing seal make sure that all the old adhesive is removed.

When fitting the new seal make sure that it fits correctly and has not buckled.

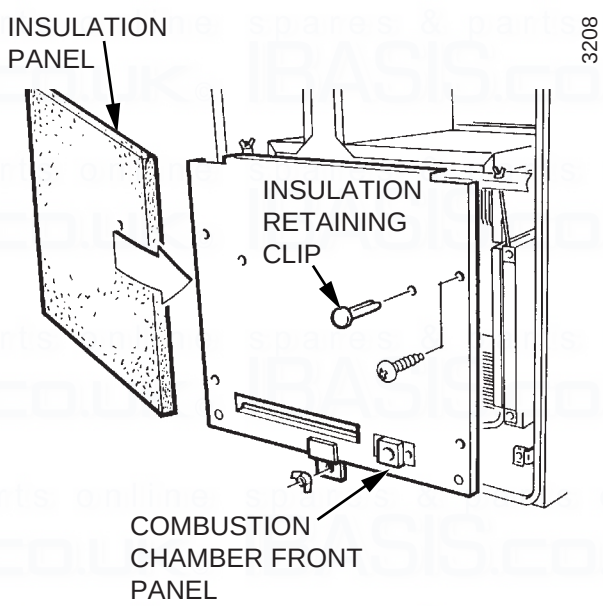

COMBUSTION CHAMBER FRONT PANEL

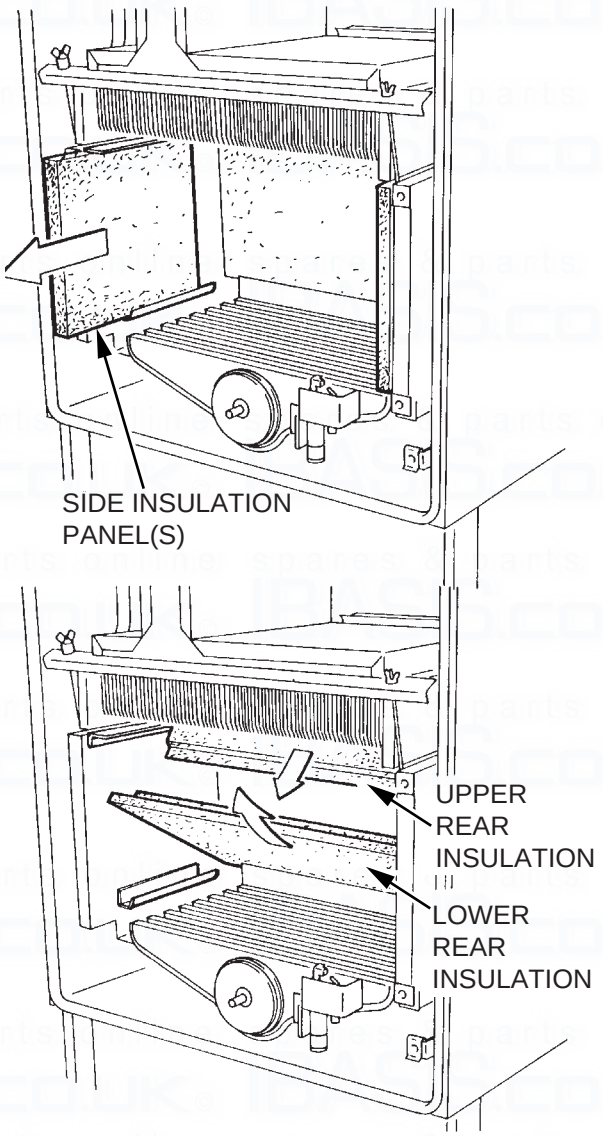

COMBUSTION CHAMBER INSULATION Diagram 13.10

13.26 Air Pressure Switch: diagram 13.13

Remove the pressure and electrical connection.

Release the air pressure switch from its bracket by unfastening the two screws.

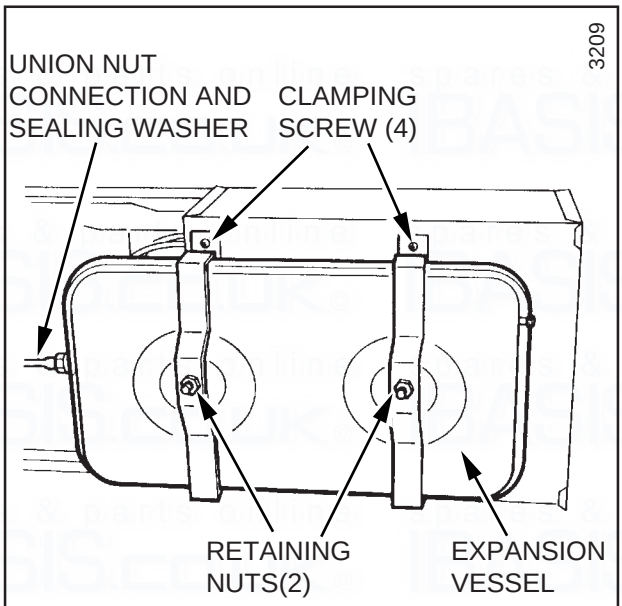

EXPANSION VESSEL Diagram 13.11

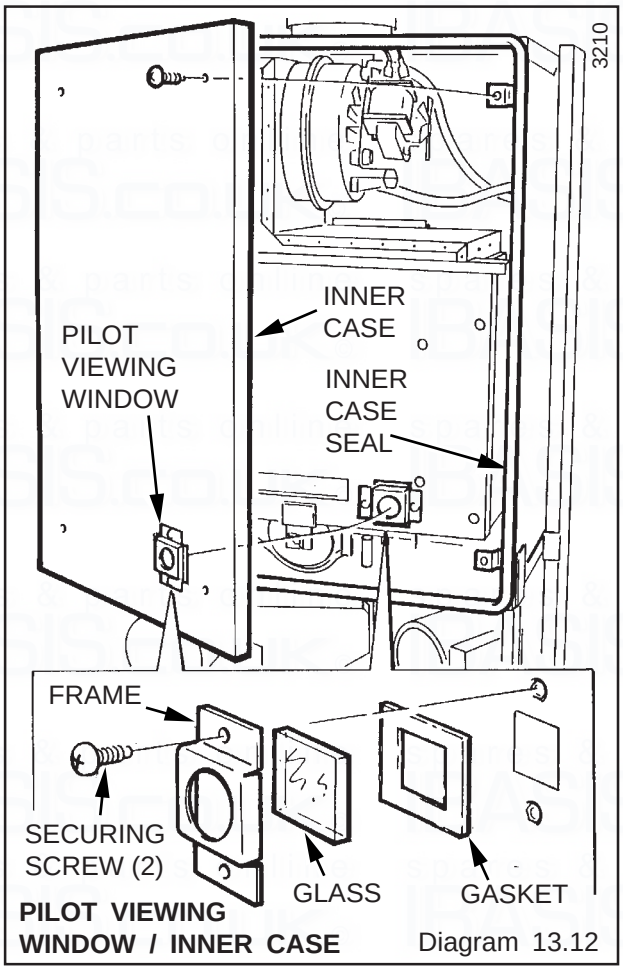

PILOT VIEWING WINDOW / INNER CASE Diagram 13.12

When refitting make sure that the coloured connection is fitted as shown and that the electrical connections are made as shown in diagram 12.5.

The polarity of the electrical connections is important.

13.27 Bypass Valve: diagram 13.14

Release the pressure and drain as Section 13.3.

Break the union connections.

Note: The replacement valve will be supplied preset and must not be adjusted.

13.28 Warning Light

Disconnect the electrical connections, see diagram 12.5, squeeze the securing tabs and remove from the fascia.

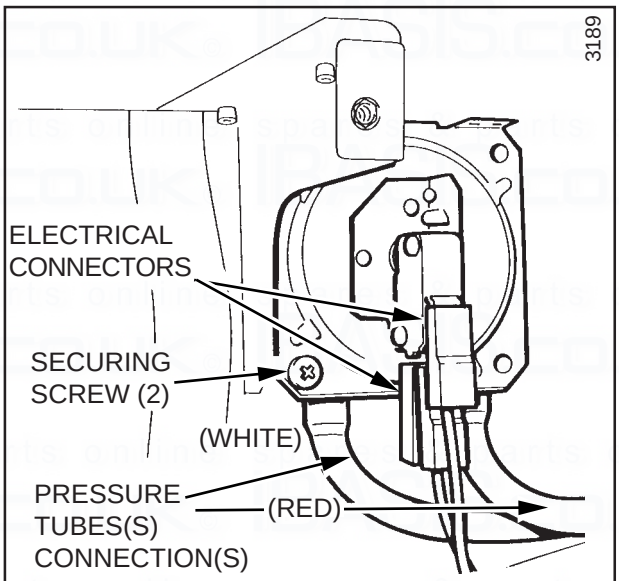

AIR PRESSURE SWITCH Diagram 13.13

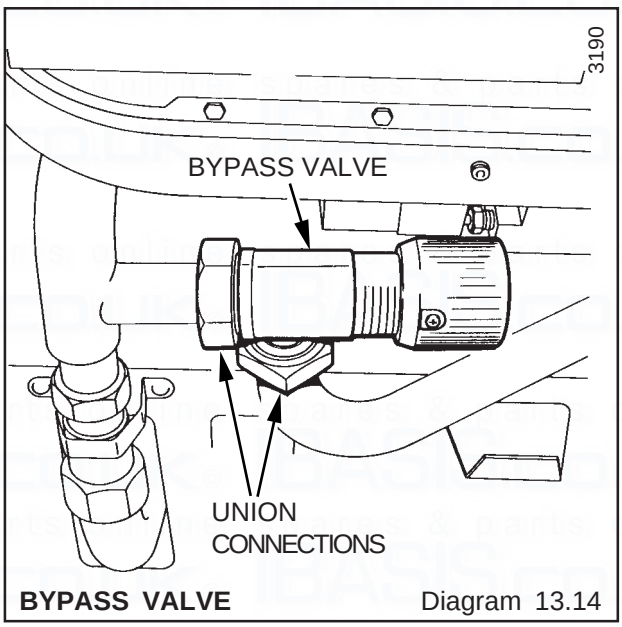

BYPASS VALVE Diagram 13.14

14.1 Part Identification

The key number in diagram 14.1 and the first column of the list will help to identify the spare part.

14.2 Ordering

When ordering any spare part, please quote the part number and the description from the list together with the model name and serial number information from the data label. The data label is positioned at the top right of the inner case.

If ordering from Britsh Gas also quote the GC number of the appliance from the data label and the GC number of the spare part, from the list.

Key No.	Part No	Description	GC No
1	800629	Fan assembly	278 261
2	800254	Main injector - 65	313 585
2	432873	Main injector - 80	376 965
3	230209	Pilot burner	397 980
4	203516	Pilot injector	376 968
5	800211	Hose assembly	311 482
6	800205	Thermostat control	397 982
7	800206	Thermostat knob	313 484
8	800259	Thermostat - cut off	378 017
9	WW4613	Ignition lead	136 399
10	800134	Pressure gauge assembly	313 294
11	800207	Control board (PCB)	313 475
12	800208	Multifunctional control	313 445
13	202015	Fuse	334 750
14	208302	Sight glass	312 419
15	900834	Air pressure switch	278 260
16	800153	Automatic air vent	313 285
17	800149	Safety valve	397 677
18	800260	Bypass valve	313 598
19	800210	Water pressure differential switch	313 452
20	441581	Low central heating water pressure neon indicator	313 589
21	800150	Low central heating water pressure switch	397 862

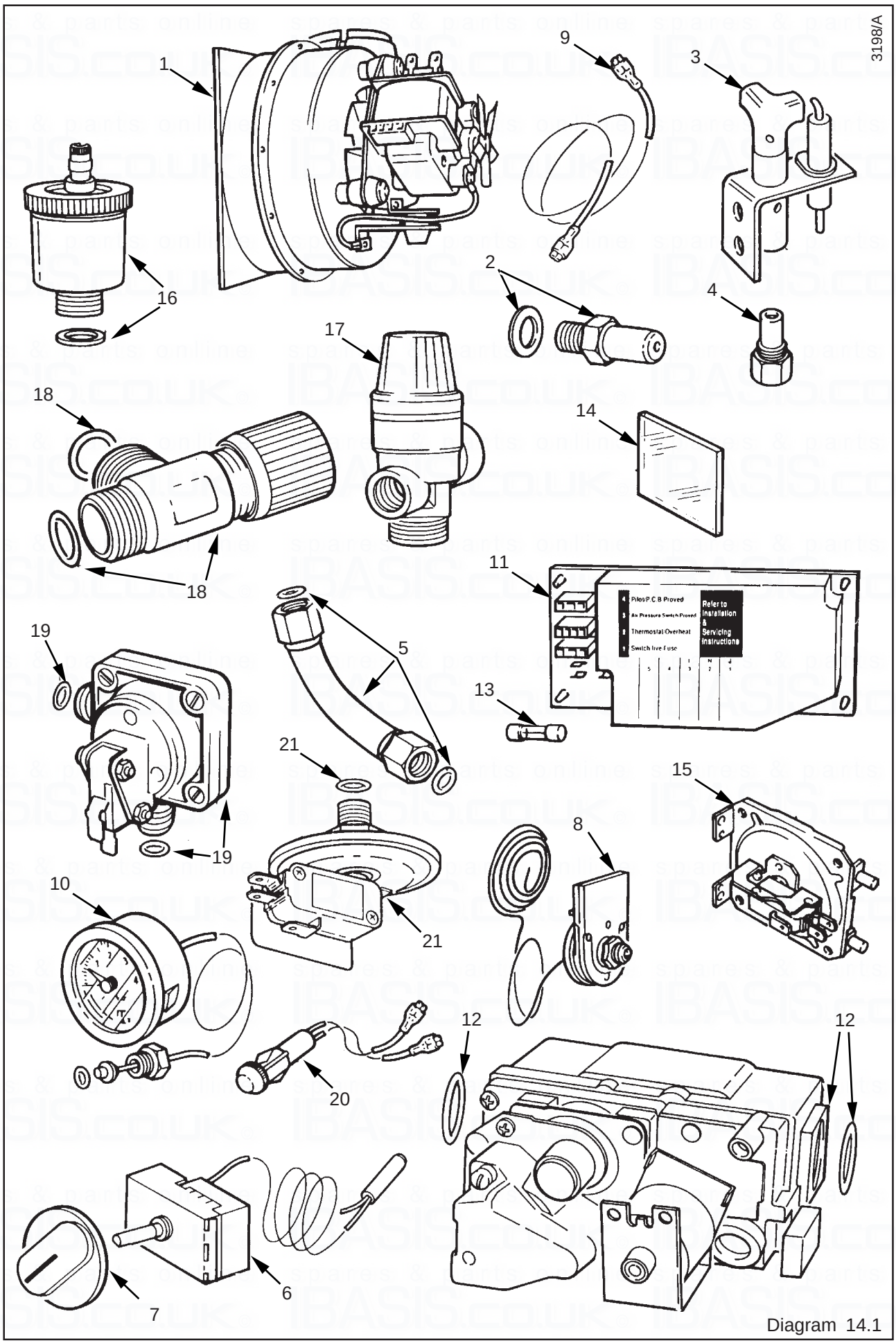
3198/A
1
2
3
4
5
6
7
8
9
10
11
12
13
14
15
16
17
18
19
20
21
Pilot/P.C.B Proved
Air Pressure Switch Proved
Thermostat/Overheat
Switch live Fuse
Refer to Installation & Servicing Instructions

Diagram 14.1

Information for the Installer and Service Engineer.
Under Section 6 of The Health and Safety at Work Act 1974, we are required to provide information on substances hazardous to health.
The adhesives and sealants used in this appliance are cured and give no known hazard in this state.

INSULATION PADS/CERAMIC FIBRE, GLASSYARN, MINERAL WOOL
These can cause irritation to skin, eyes and the respiratory tract.
If you have a history of skin complaint you may be susceptible to irritation. High dust levels are usual only if the material is broken.
Normal handling should not cause discomfort, but follow normal good hygiene and wash your hands before eating, drinking or going to the lavatory.
If you do suffer irritation to the eyes or severe irritation to the skin seek medical attention.

THERMOSTATS
These contain very small amounts of dichlorotrifluoroethane in the sealed phial and capillary.
If broken, under normal circumstances the fluid does not cause a problem.
If there is irritation to the eyes or skin then seek medical attention.

CUT-OFF DEVICES
These contain a very small amount of ethylene glycol and methanol in the capillary.
If broken, under normal circumstances the fluid does not cause a problem, but in cases of skin or eye contact, wash with cold water.
If swallowed drink plenty of water and seek medical attention.