220693B.04.97

Glow-worm

Installation & Servicing Instructions

To be left with the user

SPACE SAVER Compleat

30 - G.C. No.41 319 42

40 - G.C. No.41 319 43

50 - G.C. No.41 319 44

Fanned Flue Sealed System Boiler

3660

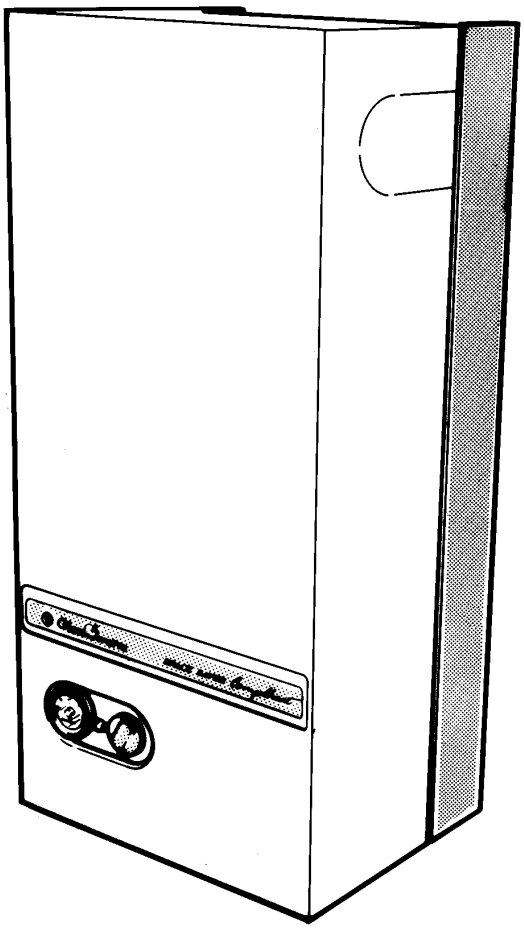

CE

Reference in these instructions to British Standards and Statutory Regulations/Requirements apply only to the United Kingdom. For Ireland the rules in force must be used.

BS 6332
BS 5258

This is a Cat I_{2H} Appliance

HEAT CALL
One Contact Total Service

Customer Services:
Tel: (01773) 828100
Fax: (01773) 828070

Hepworth Heating Ltd.,
Nottingham Road, Belper, Derbyshire. DE56 1JT
General/Sales enquiries:
Tel: (01773) 824141 Fax: (01773) 820569

The instructions consist of two parts, Installation and Servicing Instructions and Instructions for Use, which includes the Guarantee Registration Card. The instructions are an integral part of the appliance and must, to comply with the current issue of the Gas Safety (Installation and Use) Regulations, be handed to the user on completion of the installation.

1.1 Important Notices

This boiler is for use only on G20 gas.

Wherever possible, all materials, appliances and components to be used shall comply with the requirements of applicable British Standards.

Where no British Standard exists, materials and equipment should be fit for their purpose and of suitable quality and workmanship.

This boiler is not suitable for use out of doors.

THIS BOILER IS FOR USE ONLY IN A SEALED WATER SYSTEM.

It can be used to provide domestic hot water for a vented or unvented domestic system.

Note: All dimensions are in millimetres.

1.2 Sheet Metal Parts

WARNING. When installing or servicing the boiler care should be taken when handling sheet metal parts to avoid any possibility of personal injury.

1.3 Statutory Requirements

The installation of the boiler MUST be carried out by a competent person in accordance with the relevant requirements of the current issue of:-

Manufacturer's instructions supplied.

The Gas Safety (Installation and Use) Regulations, The Building Regulations, The Building Standards (Scotland) Regulations (applicable in Scotland), Local Water Company Bye-laws, The Health and Safety at Work Act, Control of Substances Hazardous to Health, The Electricity at Work Regulations and any applicable local regulations.

Detailed recommendations are contained in the current issue of the following British Standards and Codes of Practice:-

BS4814, BS5440 Part 1 and 2, BS5449, BS5546 Part 1, BS6700, BS6798, BS6891, BS7074 Part 1 and 2, BS7478, BS7593, BS7671.

Manufacturer's notes must not be taken as overriding statutory obligations.

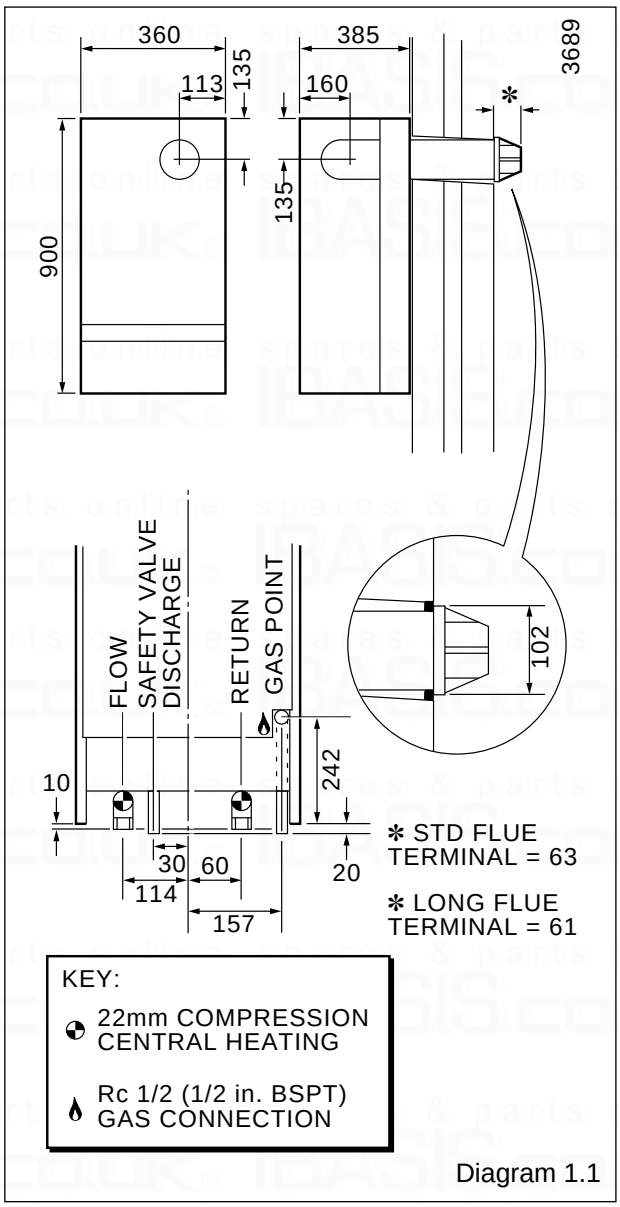

Diagram 1.1

1.4 BSI Certification

The boiler is certificated to the current issue of BS6332 Part 1, invoking the current issue of BS5258 Part 1 for performance and safety. It is, therefore, important that no alteration is made to the boiler, without permission, in writing, from Hepworth Heating Ltd.

Any alteration that is not approved by Hepworth Heating Ltd., could invalidate the BSI Certification of the boiler, the warranty and could also infringe the current issue of the Statutory Requirements.

TABLE 1. Space Saver Complheat	
MODELS	**30/40/50**
LIFTING WEIGHT	42kg (93lb)
TOTAL WEIGHT DRY	59.2kg (131lb)
WATER CONTENT	2.4litre (0.53gal)
GAS CONNECTION	Rc $^1/_2$ ($^1/_2$" BSPT)
WATER CONNECTION	22mm Compression
ELECTRICITY	240V~50Hz, fused 3A max
INTERNAL FUSE RATING	Fuse to BS4265 sheet 2. Type F1A
POWER RATING	160W

CE Mark

The CE mark on this appliance shows compliance with:

1. Directive 90/396/EEC on the approximation of the Laws of the Member States relating to appliances burning gaseous fuels.

2. Directive 73/23/EEC on the harmonization of the Laws of the Member States relating to electrical equipment designed for use within certain voltage limits.

3. Directive 89/336/EEC on the approximation of the Laws of the Member States relating to electromagnetic compatibility.

1.5 Range Rating

The boiler is range rated, factory preset to maximum and should be adjusted to suit individual system requirements, refer to Range Rating Table 2.

1.6 Equipment

The boiler is supplied with an integral expansion vessel, pump, safety valve, pressure gauge, low water pressure warning light, automatic bypass valve, gas cock and valved water connections (with drain points).

1.7 Data Label

The data label is positioned on the inner case.

For appliance data refer to Table 1.

TABLE 2. Space Saver Complheat 30				
RANGE RATING		min	medium	max
NOMINAL HEAT INPUT	*kW*	7.47	9.25	11.0
	Btu/h	25,476	31,566	37,500
NOMINAL HEAT OUTPUT	*kW*	5.86	7.33	8.79
	Btu/h	20,000	25,000	30,000
BURNER SETTING PRESSURE	*m bar*	6.8	10.8	15.3
	in.w.g	2.7	4.3	6.1
APPROX GAS RATE	*m³h*	0.7	0.9	1.1
	ft³h	25.5	31.5	37.5
BURNER INJECTOR MARKING: 203099 PILOT INJECTOR MARKING: 4212				

TABLE 2. Space Saver Complheat 40				
RANGE RATING		min	medium	max
NOMINAL HEAT INPUT	*kW*	11.2	12.9	14.65
	Btu/h	38,217	44,136	50,000
NOMINAL HEAT OUTPUT	*kW*	8.79	10.25	11.72
	Btu/h	30,000	35,000	40,000
BURNER SETTING PRESSURE	*m bar*	9.4	13.1	16.6
	in.w.g	3.8	5.3	6.7
APPROX GAS RATE	*m³h*	1.1	1.2	1.4
	ft³h	38.0	44.0	50.0
BURNER INJECTOR MARKING: 205700 PILOT INJECTOR MARKING: 4212				

TABLE 2. Space Saver Complheat 50				
RANGE RATING		min	medium	max
NOMINAL HEAT INPUT	*kW*	15.13	16.72	18.43
	Btu/h	51,620	57,050	62,880
NOMINAL HEAT OUTPUT	*kW*	11.72	13.19	14.65
	Btu/h	40,000	45,000	50,000
BURNER SETTING PRESSURE	*m bar*	10.1	12.5	15.4
	in.w.g	4.0	5.0	6.2
APPROX GAS RATE	*m³h*	1.5	1.6	1.8
	ft³h	52.0	58.0	63.0
BURNER INJECTOR MARKING: 205745 PILOT INJECTOR MARKING: 4212				

1.8 Gas Supply

The gas installation must be in accordance with the current issue of BS6891.

The supply from the governed meter must be of adequate size to provide a steady inlet working pressure of 20mbar (8in wg) at the boiler.

On completion, test the gas installation for soundness using the pressure drop method and suitable leak detection fluid, purge in accordance with the current issue of BS6891.

1.9 Electrical Supply

WARNING. This boiler must be earthed.

All system components and wiring shall be of the approved type and comply with and be connected in accordance with the requirements of the current issue of BS7671 and any applicable local regulations.

Connection of the boiler and system controls to the mains supply must be through a common isolator and must be fused 3A maximum. This method of connection should be, preferably, by a fused double pole isolating switch, provided it has a minimum contact separation of 3mm on both poles. This switch should be readily accessible and preferably adjacent to the appliance. It should supply the appliance only and be easily identifiable as so doing.

Alternatively, an unswitched shuttered socket outlet and 3A fused 3 pin plug both to the current issue of BS1363 may be used provided that they are not used in a room containing a bath or shower.

Wiring to the boiler must be PVC insulated type to the current issue of BS6500 Table 16, not less than 0.75mm^2 (24/0.20mm).

1.10 System Controls

It is recommended that the system is controlled by a time switch and room thermostat, a proprietary control system or by thermostatic radiator valves, refer to the current issue of BS7478.

2.1 General Note

The installation of the boiler must comply with the current issue of BS6798.

2.2 Safety Valve

The safety valve, preset at 3bar, is an integral part of the boiler and cannot be adjusted.

2.3 Pressure Gauge

A pressure gauge is fitted to the boiler to indicate the system pressure.

2.4 Pump

The pump is integral with the boiler.

The remaining carrying capacity of the pump is shown in diagram 2.1.

2.5 Expansion Vessel

The boiler has an integral expansion vessel with a capacity of 7Litres (1.54gallons), with a charge pressure of 0.75bar.

The maximum heating system water content using the fitted expansion vessel ranges from 104Litres with cold fill pressure of 0.7bar to 86Litres with a cold fill pressure of 1.05bar. If, due to a high static head, the cold fill pressure is higher, then the expansion vessel charge pressure must be increased and the maximum system volume decreased.

The Schrader connection on the vessel should be used to increase or decrease the pressure, this should be done BEFORE the boiler is mounted onto the wall frame.

See also the current issue of BS7074 Part 1.

If the system has a larger water content an additional expansion vessel should be fitted.

Further information can be obtained from the British Gas Publication “British Gas Specification for Domestic Wet Central Heating Systems” and the current issue of BS4814, BS5449 and BS7074 Part 1 and 2.

2.6 Flow Rate

A valve must be incorporated in the main flow or return of the system, valve “A” shown in the flow diagram 2.2. This valve must be lockable and be positioned so that inadvertent closure or unauthorised interference is not possible. The design differential is 11°C (20°F) with the control thermostat set at “MAX”, which is about 82°C (180°F).

The pump adjuster should always be left at maximum (3), see diagram 13.13.

WATER FLOW RATE
At 11°C (20°F) differential

UNIT	30	40	50
litre/min.	11.4	15.2	18.9
gal/min.	2.5	3.3	4.2

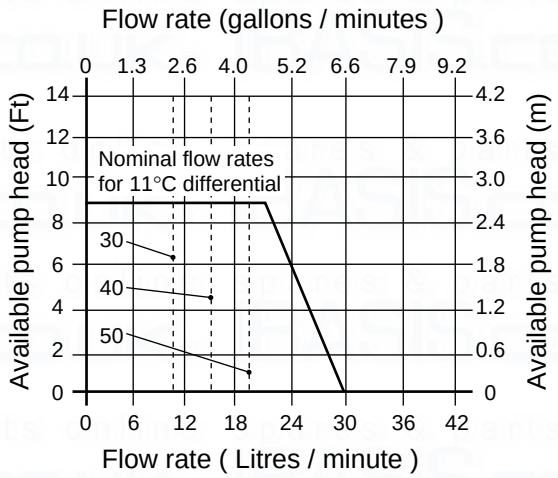

Diagram 2.1

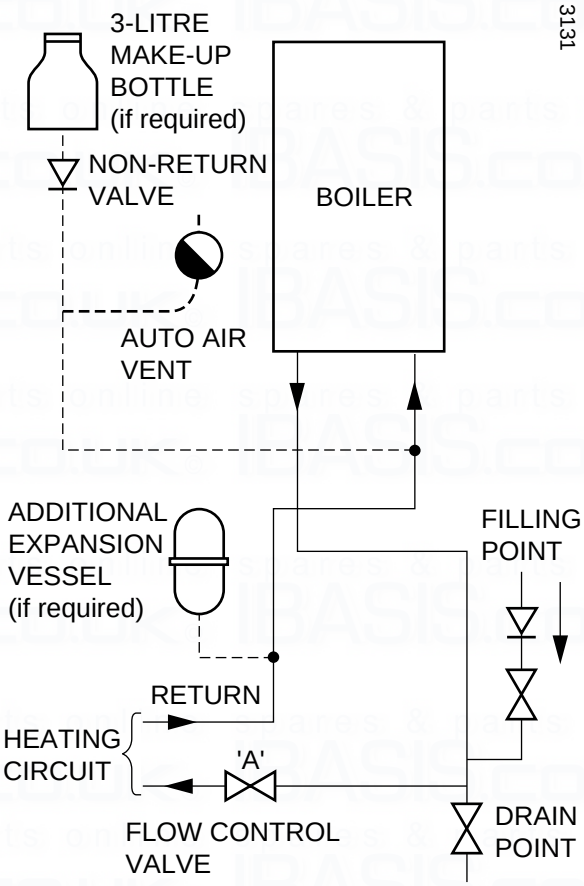

Diagram 2.2

2.7 Bypass

An automatic bypass valve is fitted in the boiler pipework, it is preset and MUST NOT be adjusted.

2.8 Water Make Up

Provision should be made for replacing water lost from the system. Use a make up bottle mounted in a position higher than the top point of the system, connected through a non-return valve to the return side of the heating circuit, see diagram 2.2.

Alternatively, provision for make up can be made using a filling loop.

2.9 Filling Sealed Water Systems

Provision for filling the system must be made, preferably adjacent to the boiler.

Three methods of filling are shown in diagram 2.3. There must be no permanent connection to the mains water supply, even through a non-return valve.

2.10Corrosion Inhibitor

Attention is drawn to the current issue of BS5449 and BS7478 on the use of inhibitors in central heating systems.

If an inhibitor is to be used in the system, contact a manufacturer for their recommendations.

2.11 Existing Systems

When fitting the boiler into an existing system, special care should be taken to drain the entire system, including the radiators, then thoroughly cleaning out before fitting the boiler whether or not adding an inhibitor.

2.12 Draining Tap

A draining tap must be provided at the lowest points of the system, which will allow the entire system to be drained. An additional draining tap MUST be fitted close to the boiler.

Draining taps must be to the current issue of BS2879.

The flow and return isolating valves on the boiler are fitted with drain points for heat exchanger draining.

2.13 Domestic Hot Water System

General. The domestic hot water service must be in accordance with the current issue of BS5546, refer also to the current issue of BS6700.

2.14 Domestic Hot Water Cylinder

SINGLE FEED INDIRECT CYLINDERS ARE NOT SUITABLE AND MUST NOT BE USED.

The domestic hot water cylinder must be of the indirect coil type. It must be suitable for a working at a gauge pressure of 0.35bar above the safety valve setting.

2.15 Domestic Hot Water System - Unvented

Where a storage system will not have a vent to atmosphere the installation must comply with Building Regulations and local Water Company bye-laws, see also the current issue of BS6700.

If fitting into an existing system the local authority must also be informed.

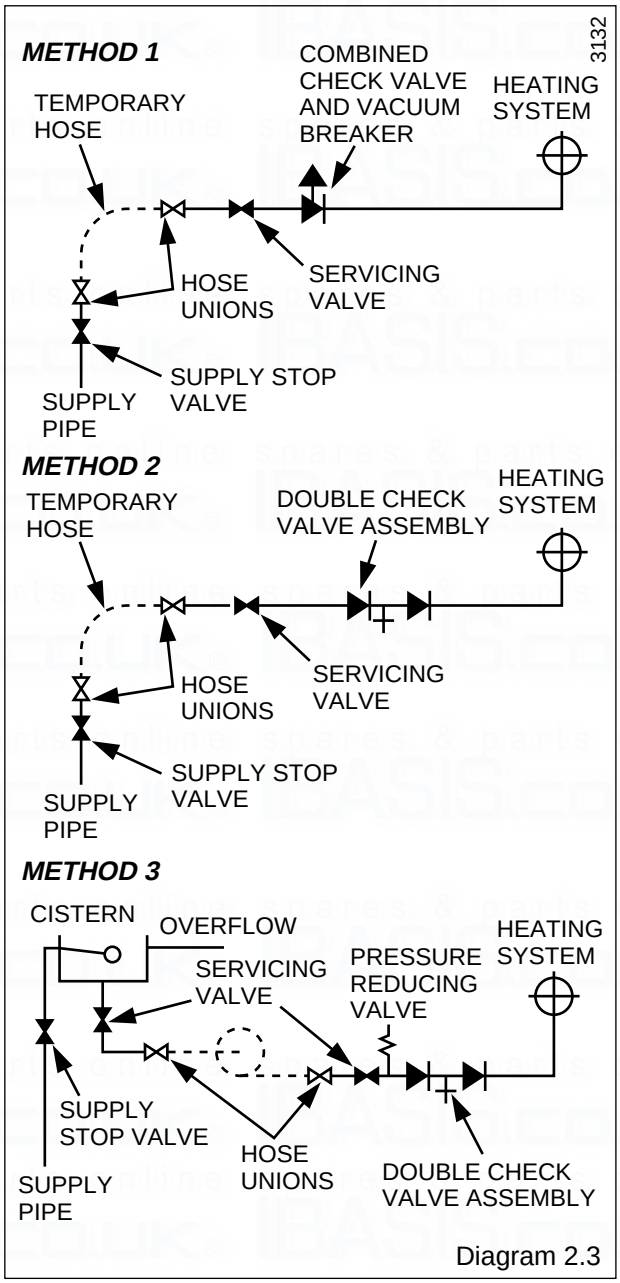

Diagram 2.3

3.1 General

The boiler may be installed in any room although particular attention is drawn to the requirements of the current issue of BS7671 with respect to the installation of a boiler in a room containing a bath or shower.

Any electrical switch or boiler control using mains electricity should be so situated that it cannot be touched by a person using the bath or shower.

The electrical provisions of the Building Standards (Scotland) Regulations are applicable to such installations in Scotland.

The boiler must be mounted on a flat wall which is sufficiently robust to take its total weight, see Data Table 1.

3.2 Boiler Clearances

The boiler should be positioned so that at least the minimum operational and servicing clearances are provided, see diagram 3.1.

3.3 Timber Frame Buildings

If the boiler is to be installed in a timber frame building, it should be fitted in accordance with the British Gas publication “Guide for Gas Installation in Timber Framed Housing”, reference DM2. If in doubt, seek advice from the local gas undertaking or Hepworth Heating Ltd.

3.4 Room Vent

The boiler is room sealed, so when installed in a room or space, a permanent air vent is not required.

3.5 Cupboard or Compartment Vent

Where the boiler is fitted in a cupboard or compartment, permanent high and low level ventilation must be provided.

The vent areas required are given in Table 3.

Where the installation of the boiler will be in an unusual location, special precautions are necessary, refer to the current issue of BS6798 for guidance.

Make sure that the cupboard or compartment air vents are positioned to be clear of obstructions at all times.

A compartment used to enclose the boiler must be designed and constructed specifically for this purpose.

An existing cupboard or compartment modified for the purpose may be used, refer to the current issue of BS6798 for guidance.

The doorway opening should be of sufficient size to allow easy removal of the boiler.

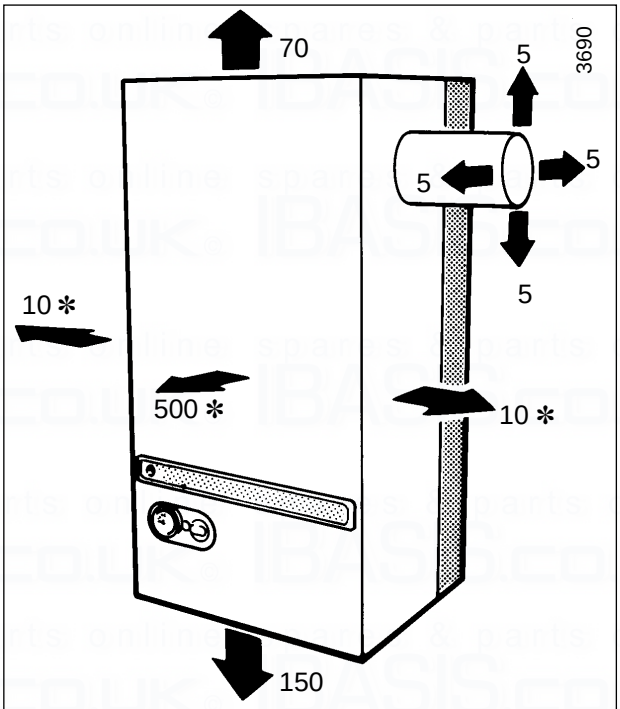

✻ WHERE EXTERNAL ACCESS TO THE FLUE IS NOT PRACTICAL THEN CLEARANCE MUST BE ADEQUATE TO PERMIT INSTALLATION OF THE FLUE ASSEMBLY

Diagram 3.1

TABLE 3. COMPARTMENT AIR VENTS

VENTILATION REQUIREMENTS		HIGH LEVEL VENT AREA		LOW LEVEL VENT AREA	
MODEL		cm²	in²	cm²	in²
VENTILATION FROM ROOM OR	**30**	99	15	99	15
	40	133	21	133	21
	50	168	26	168	26
VENTILATION FROM OUTSIDE	**30**	50	8	50	8
	40	67	10	67	10
	50	84	13	84	13

4.1 General

The flue must be installed in accordance with the current issue of BS5440 Part 1.

The boiler must be installed so that the terminal is exposed to the external air.

It is important that the position of the terminal allows the free passage of air across it at all times.

4.2 Terminal Position

The minimum acceptable spacings from the terminal to obstructions and ventilation openings are as shown in diagram 4.1.

Car ports or similar extensions of a roof only, or a roof and one wall, require special consideration with respect to any openings, doors, vents or windows under the roof. Care is required to protect the roof if it is made of plastic sheeting. If the car port consists of a roof and two or more walls, seek advice from the local gas company before installing the boiler.

Where the terminal is fitted within 600mm (24in) below plastic guttering an aluminium shield 1500mm (5ft) long should be fitted to the underside and immediately beneath the guttering or eaves.

Where the terminal is fitted within 450mm (18in) below eaves or painted guttering an aluminium shield 750mm (2ft6in) long should be fitted to the underside and immediately beneath the guttering or eaves.

4.3 Terminal Protection

A terminal guard is required if persons could come into contact with the terminal or the terminal could be subject to damage.

If a terminal guard is required, it must be positioned to provide a minimum of 50mm clearance from any part of the terminal and be central over the terminal, see diagram 4.1.

A suitable terminal guard can be obtained from:

Tower Flue Components Ltd.,
Morley Road,
Tonbridge,
Kent.
TN9 1RA

their reference K3.

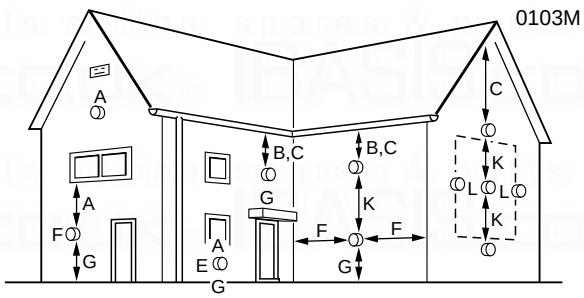

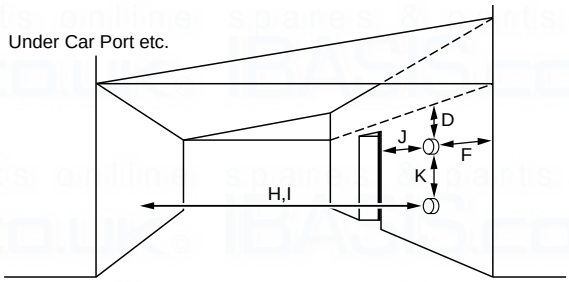

MINIMUM SITING DIMENSIONS FOR FLUE TERMINAL		MIN. SPACING (mm)
A	DIRECTLY BELOW AN OPENABLE WINDOW, AIR VENT OR ANY OTHER VENTILATION OPENING	300
B	BELOW GUTTER, DRAIN SOIL PIPE	75
C	BELOW EAVES	200
D	BELOW A BALCONY OR CAR PORT	200
E	FROM VERTICAL DRAIN PIPES AND SOIL PIPES	75
F	FROM INTERNAL OR EXTERNAL CORNERS	300
G	ABOVE ADJACENT GROUND OR BALCONY LEVEL	300
H	FROM A SURFACE FACING THE TERMINAL	600
I	FACING TERMINALS	1200
J	FROM OPENING (DOOR / WINDOW) IN CAR PORT INTO DWELLING	1200
K	VERTICAL FROM A TERMINAL	1500
L	HORIZONTALLY FROM A TERMINAL	300

0161M

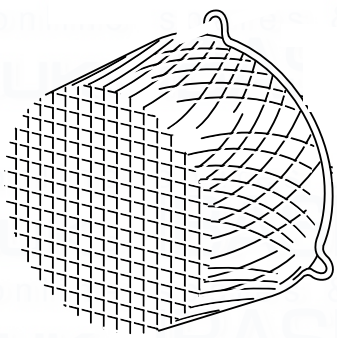

Diagram 4.1

4.4 Flue Position and Length

Determine flue application, length and terminal position before starting.

Refer to diagram 4.2 or 4.3.

Note. If a longer flue duct is required DO NOT extend the ducting. A long flue system and terminal can be supplied.

For a wall thickness of less than 300mm the flue can be fully installed from inside.

For a wall thickness over 300mm the cut hole will need to be made good from the outside.

The rear and side flue assemblies are designed for internal installation, but should it be necessary due to insufficient clearance or boiler location they can be installed from the outside.

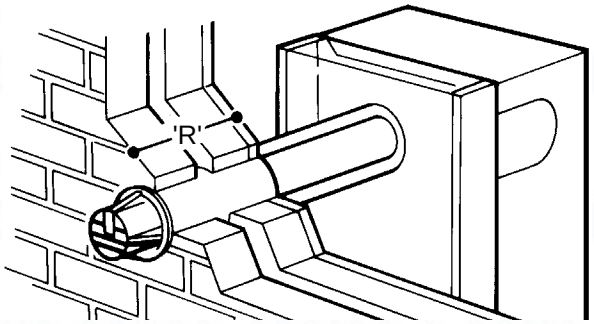

REAR FLUE LENGTHS	
R = Wall Thickness	
STD Flue pack	75mm to 588mm
1m Flue pack	75mm to 918mm
2m Flue pack	75mm to 1918mm

Diagram 4.2

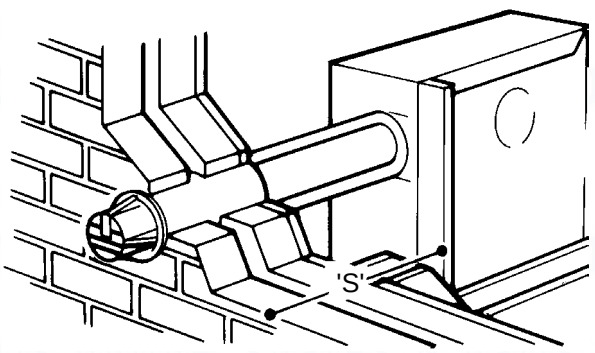

SIDE FLUE LENGTHS	
S = "External wall face" to "boiler casing"	
STD Flue pack	85mm to 684mm
1m Flue pack	85mm to 1014mm
2m Flue pack	85mm to 2014mm

Diagram 4.3

5.1 Unpacking

Remove the top carton from the boiler.

To remove the outer case, unhook at the top and lift off, see diagram 5.1. Put in a safe place until required.

Remove and discard the internal packing piece.

Remove the inner case by releasing the screws at the bottom and unhooking at the top, put on one side until required, see diagram 5.2.

Break the union connections of isolating valves, slacken but do not remove the retaining strap screws of the isolating valves, see diagram 5.3.

Slacken but do not remove the boiler securing screws, see diagram 5.3, then separate the boiler from the mounting frame, by pulling the location stud/clips apart and then unhook it at the top.

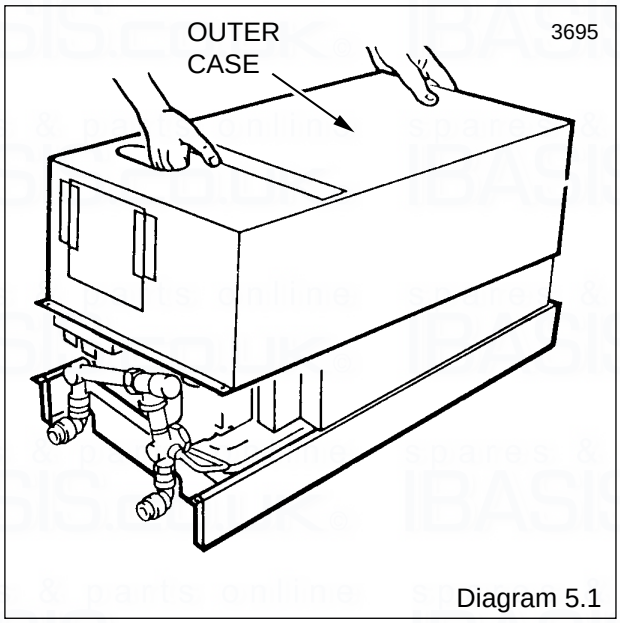

Diagram 5.1

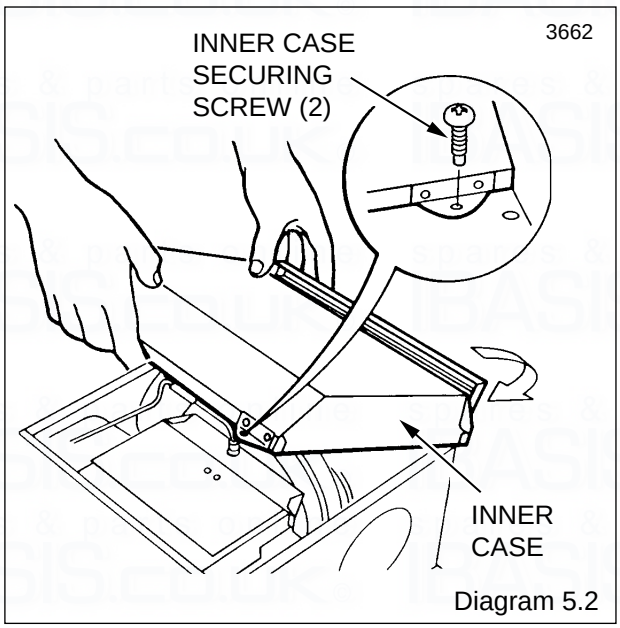

Diagram 5.2

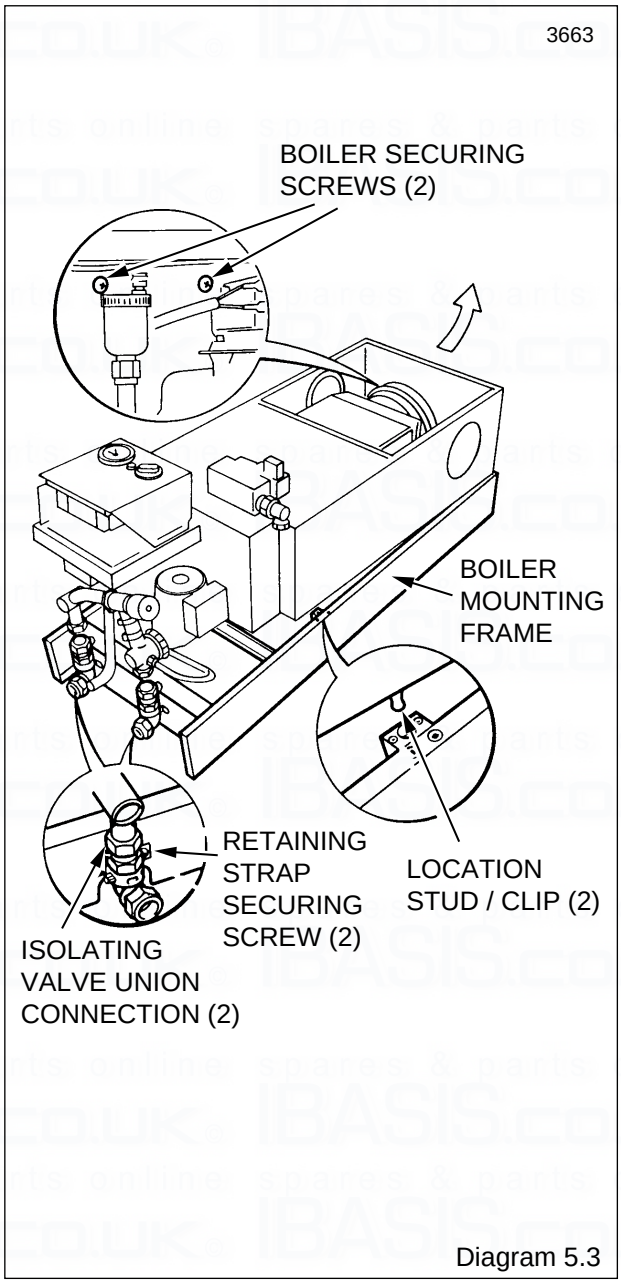

Diagram 5.3

6.1 General

With due regard to boiler location, clearances and having determined the flue application, length and terminal position carry on as follows:

6.2 Marking

The boiler mounting frame is the same width as the boiler casing with the flue connection either to the side or rear.

Place the boiler mounting frame on the wall in the required position, maintaining clearances, see diagram 6.1.

Make sure that the top of the frame is horizontal, then mark the five wall fixing points through the holes in the two horizontal straps, see diagram 6.1 do not drill the holes.

Position the flue template on the wall, the arrow points on the centres of the three upper fixing points previously marked, see diagram 6.2 which also gives dimensions.

For a rear flue, mark the rear flue position as required, centre or diameter.

For a side flue, mark the horizontal flue centre line at the sides of the template. Extend the flue centre line horizontally left or right to the internal corner where the flue is required to exit to the outside.

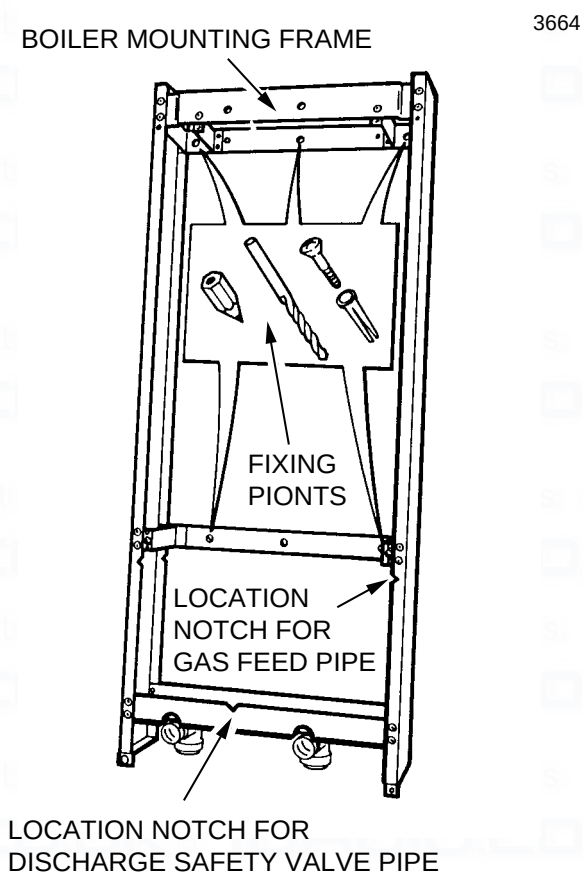

Diagram 6.1

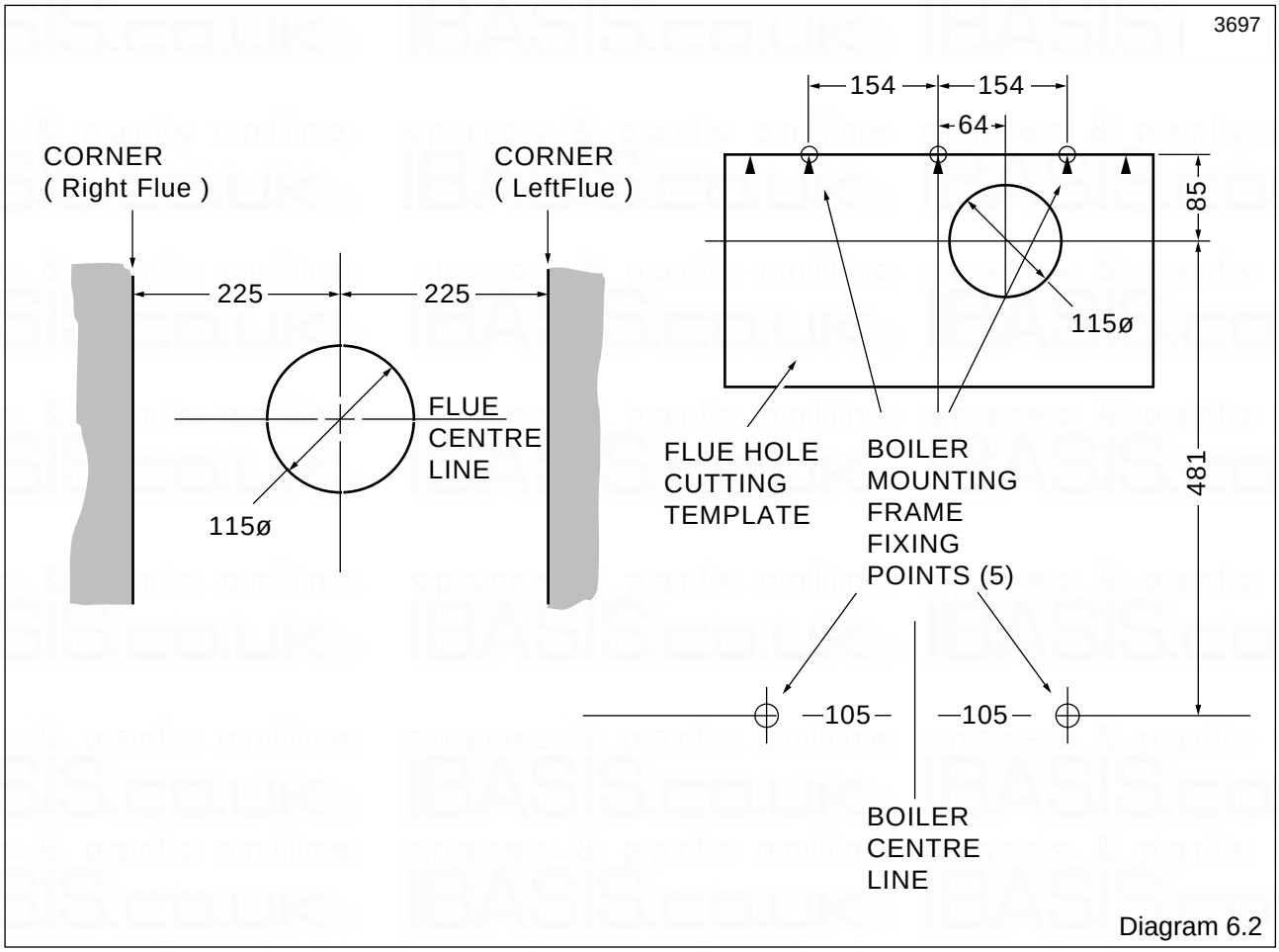

Diagram 6.2

Mark the position of the circular hole, on the flue exit wall, using the dimensions given in diagram 6.2.

From the flue position marks, check that the flue terminal will be in a suitable position, see diagram 4.1.

6.3 Flue Hole Cutting

Mark out the centre and cut the hole for the flue using, preferably, a 115mm minimum core drill, see diagram 6.2.

6.4 Wall Sleeve

If the wall thickness “Q” is less than 300mm cut the wall sleeve to the required length.

Fit the wall sleeve, see diagram 6.3

Make good around the wall sleeve at both internal and external wall faces (through the wall sleeve if internal access only is available).

If the wall thickness “Q” is greater than 300mm the wall sleeve must be fitted flush with the INSIDE wall face.

If the inner end of the wall sleeve sticks out into a cavity the wall sleeve can be trimmed back to the depth of the inner skin of the brickwork. Make good at the internal wall faces, leave the external wall face until later.

6.5 Boiler Mounting Frame - Fixing

Position the flue template over the flue hole and check the position of the wall fixing points. Mark the position of the fixing holes again, if required, see diagram 6.1.

Drill the five holes and insert wall plugs to suit No10x50mm pozi head screws.

Secure the boiler mounting frame to the wall using No10x50mm pozi head screws, see diagram 6.1.

Note: Remove the clear plastic protective film from the sides of the boiler mounting frame.

6.6 Rear Flue Duct

Mark the duct to the length “R”+100mm then cut square and remove any burrs, see diagram 6.4.

6.7 Rear Air Duct/Terminal

Mark the duct to length “R”+102mm then cut square and remove any burrs, see diagram 6.5.

6.8 Continue at Air Duct/Terminal and Flue Duct Assembly, Section 6.11.

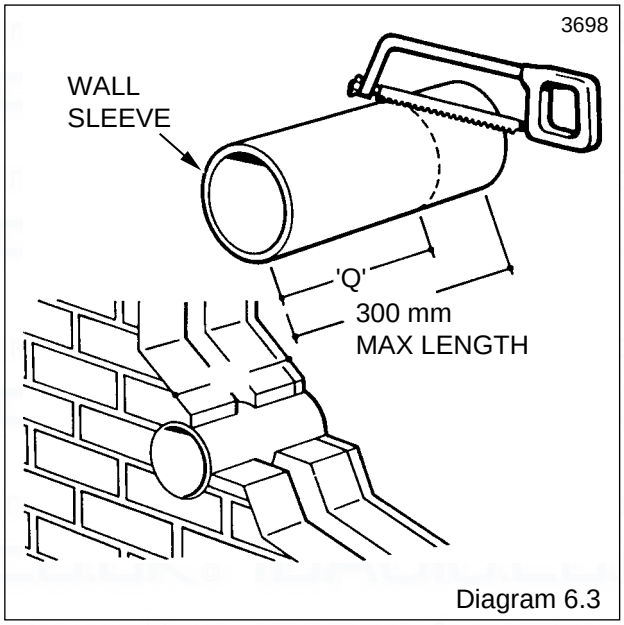

Diagram 6.3

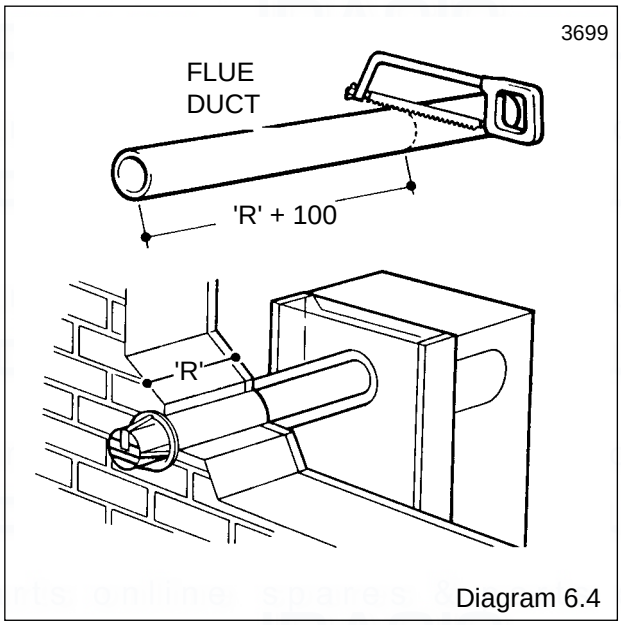

Diagram 6.4

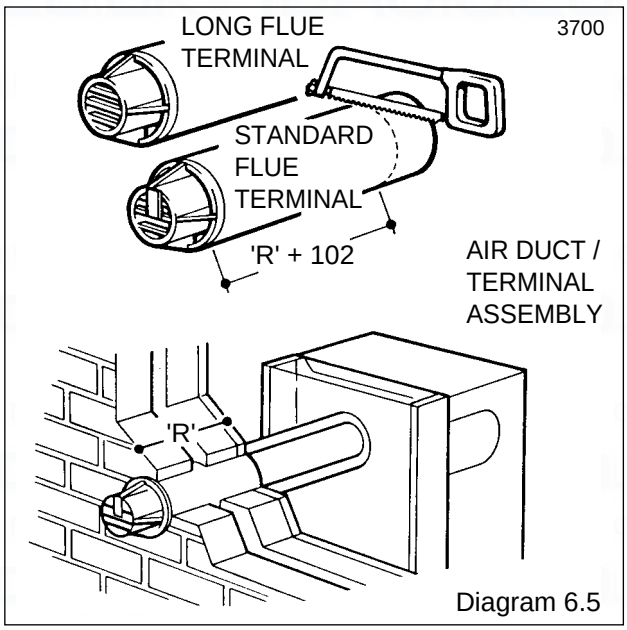

Diagram 6.5

6.9 Side Flue Duct

Mark the duct to length “S”+3mm then cut square and remove any burrs, see diagram 6.6.

6.10 Side Terminal/Air Duct

Mark the duct to length “S”+5mm then cut square and remove any burrs, see diagram 6.7.

6.11 Air Duct/Terminal and Flue Duct Assembly

Locate the flue duct into the air duct/terminal, see diagram 6.8.

Place the sealant, from the loose items pack, onto the flue manifold, see diagram 6.9.

Fully locate the flue manifold in to the air duct/terminal and flue duct assembly as shown in diagram 6.9, make sure of the correct alignment of the “TOP”s.

Drill two 3mm diameter holes through the air duct/ terminal and flue manifold, see diagram 6.10.

Secure the air duct/terminal to the flue manifold with the two self tapping screws supplied in the loose items pack, see diagram 6.10.

It should now not be possible to remove the manifold.

6.12 Wall thickness up to 300mm

Fit the self adhesive foam seal provided in the loose items pack around the air duct/terminal at the position shown in diagram 6.11.

6.13 Wall thickness over 300mm

Fix the self adhesive foam seal around the air duct/ terminal such that, when installed, the seal will be within the wall sleeve, see diagram 6.12.

If the boiler is not to be fitted for some time cover the hole in the wall.

6.14 All Installations

Push the flue assembly into and through the wall sleeve and hole such that it is within the wall sleeve and does not protrude into the room. Do not push the flue assembly too far into the hole as it has to be pulled back into the boiler and secured to the keyhole fixings.

Note. The foam seal is a tight fit in the wall sleeve, so either the wall sleeve will need to be rigidly fixed in the wall, that is, the cement has fully set or it can be held from the other side whilst inserting the flue assembly.

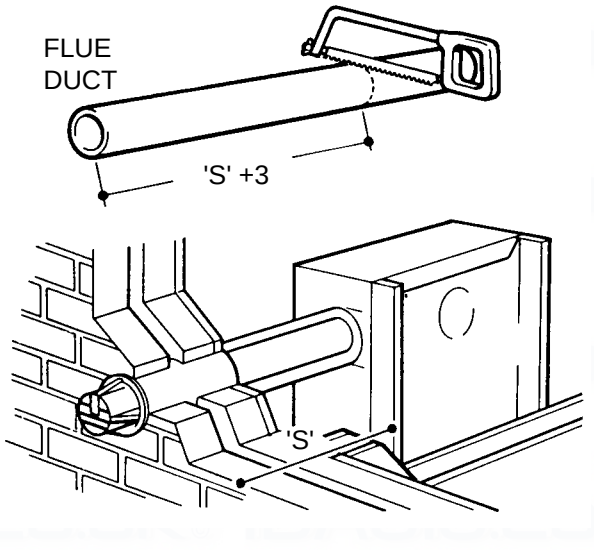

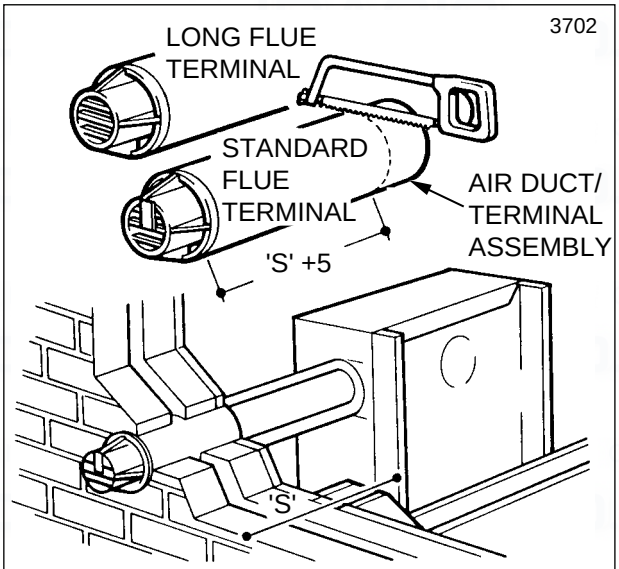

Diagram 6.7

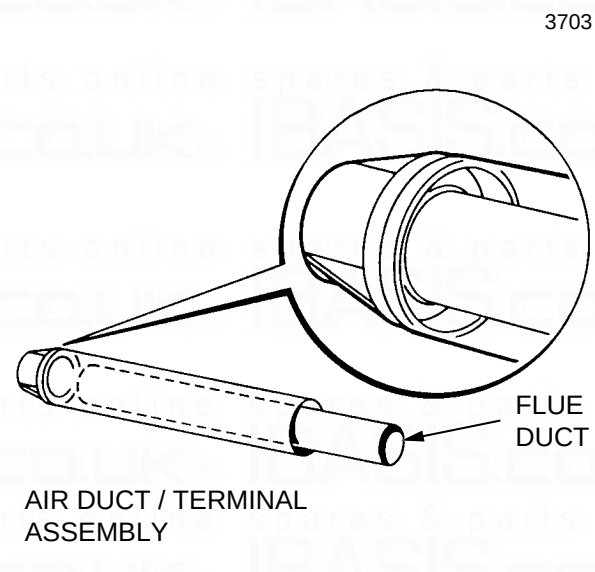

Diagram 6.8

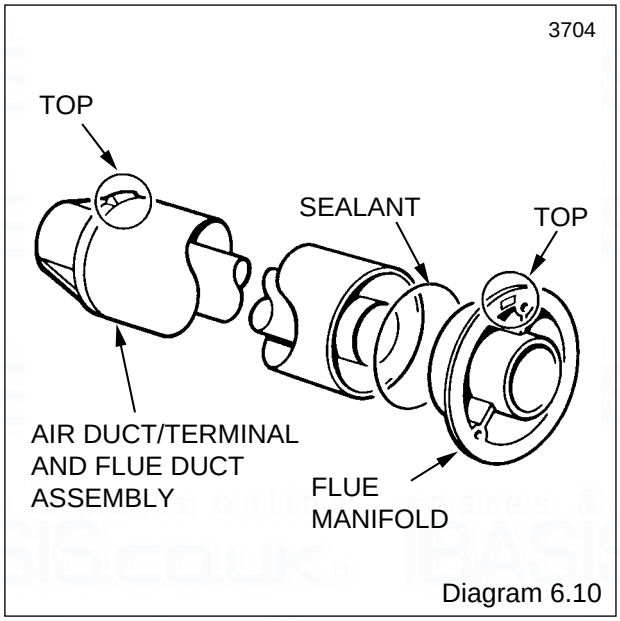

Diagram 6.10

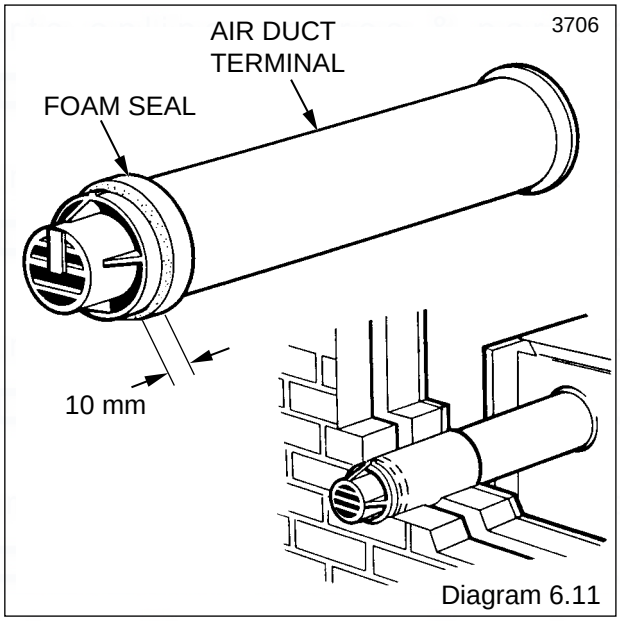

Diagram 6.11

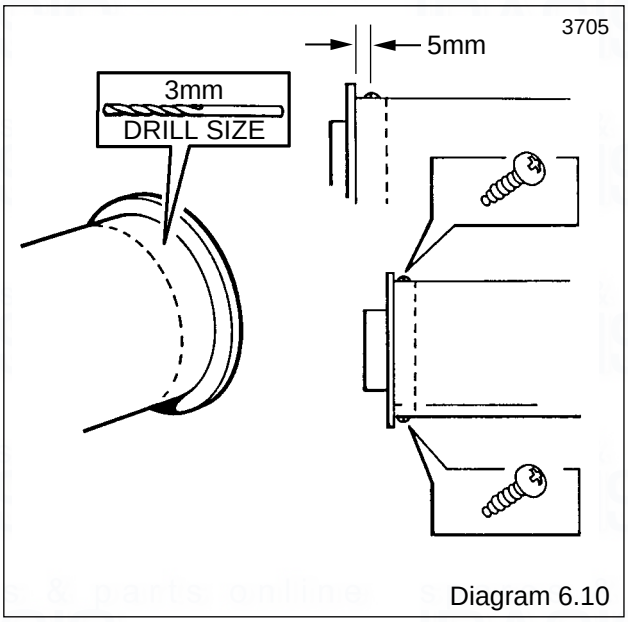

Diagram 6.10

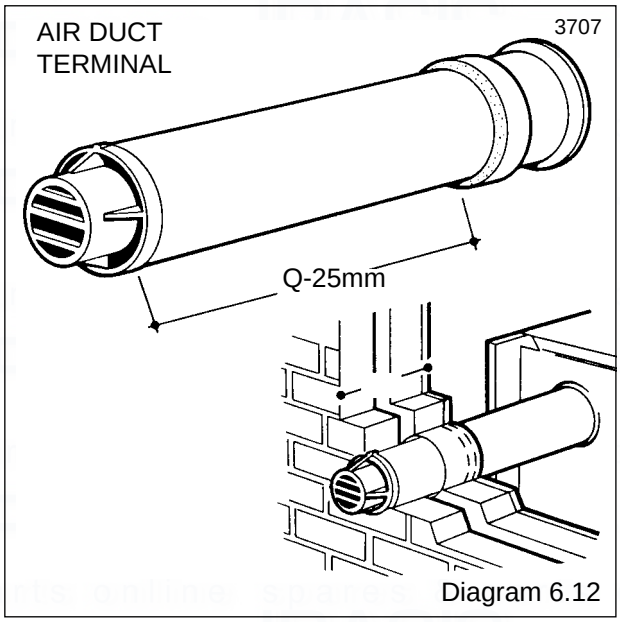

Diagram 6.12

7.1 Water Connection

Flush out the heating system before connecting the boiler.

Provision is made for the flow and return pipes to be connected from above, if required, passing down either side of the boiler, see diagram 7.1 for clearances.

Note: Take care that any pipework connected from above within the boiler mounting frame will clear the expansion vessel.

Make the connections to the heating system by way of the isolating valves, see diagram 7.2.

It may be convenient to remove the securing straps whilst making the connections.

Make sure that the drain points on the valves are positioned toward the front of the boiler, also that the drain and operating screws are accessible.

7.2 Gas Connection

The gas supply can be connected from above, below or through the wall at the rear of the boiler, see diagram 7.8 for position.

Check for gas soundness up to the gas service cock in accordance with the current issue of BS6891.

7.3 Mounting the Boiler

Note: The boiler is supplied for rear flue outlet, for side flue outlet the blanking plate will have to be removed and repositioned as shown in diagram 7.3.

Remove the purple and red connections from the fan.

Break the air pressure switch tubes connections, see diagram 7.4.

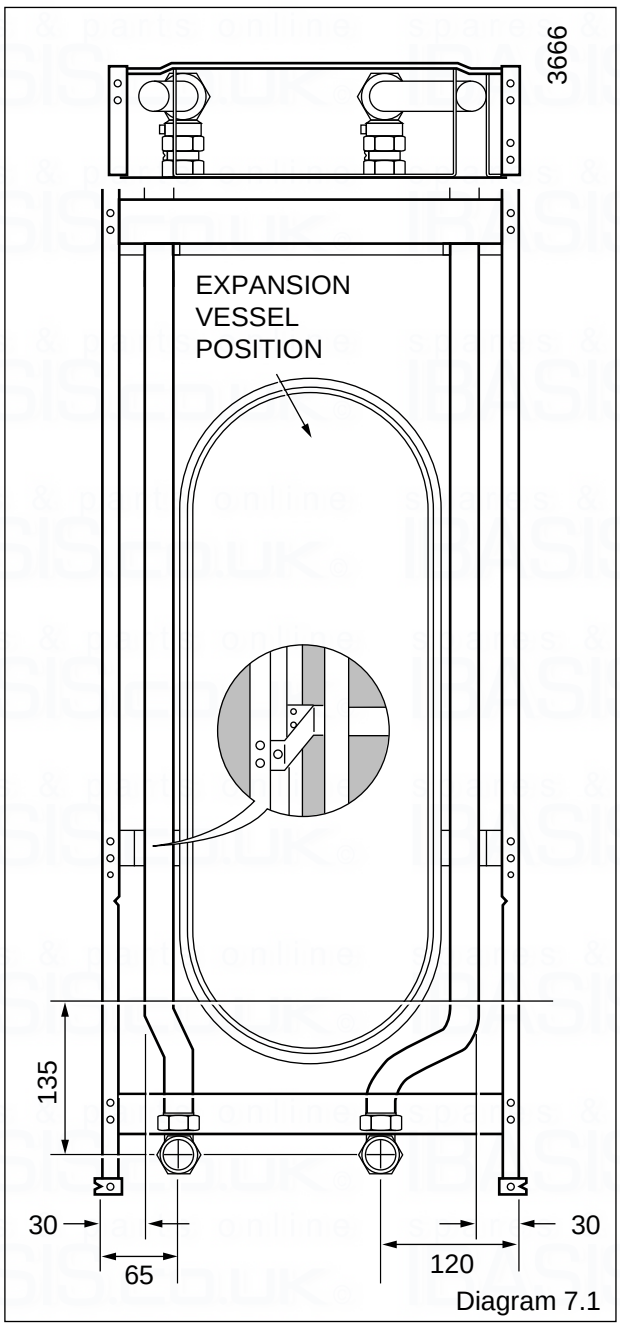

Diagram 7.1

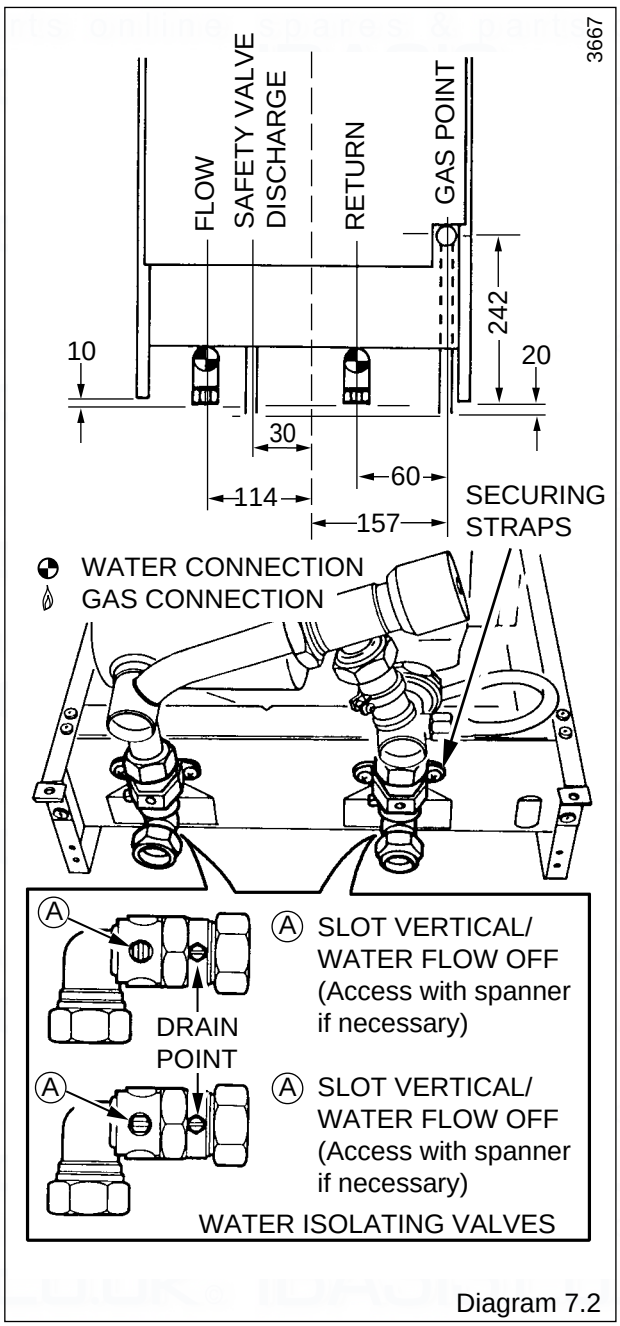

Diagram 7.2

Remove the fan/flue hood assembly by removing the two screws, one at each side, see diagram 7.4.

Lift the boiler into position, centralise then hook it onto the boiler mounting frame at the top, see diagram 7.5, then partly tighten the boiler securing screws at the top, see diagram 5.3.

After positioning the location studs into the clips, see diagram 7.5, fully push the boiler back to the mounting frame.

Make the compression joints on the isolating valves. It may be convenient to remove the straps when securing the valves, see diagram 7.2.

Make the connection to the gas service cock, see diagram 7.8

Secure the boiler by fully tightening the two fixing screws at the top, see diagram 7.5.

Replace the straps, if removed.

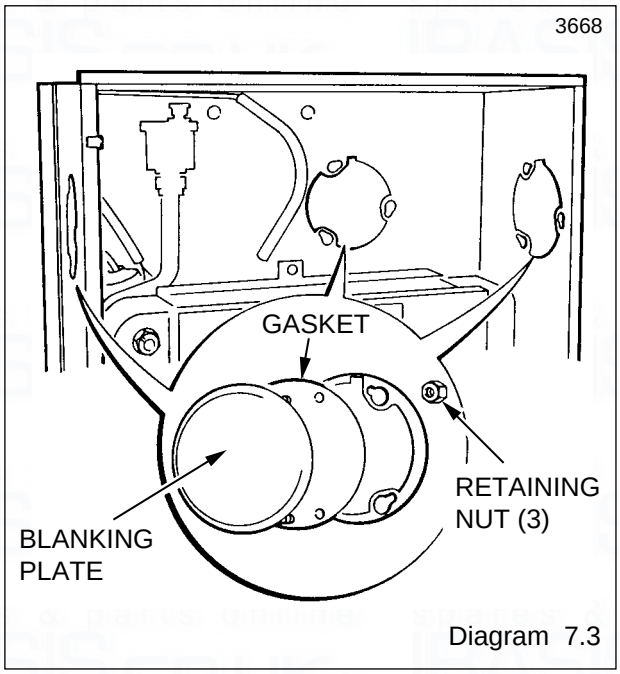

Diagram 7.3

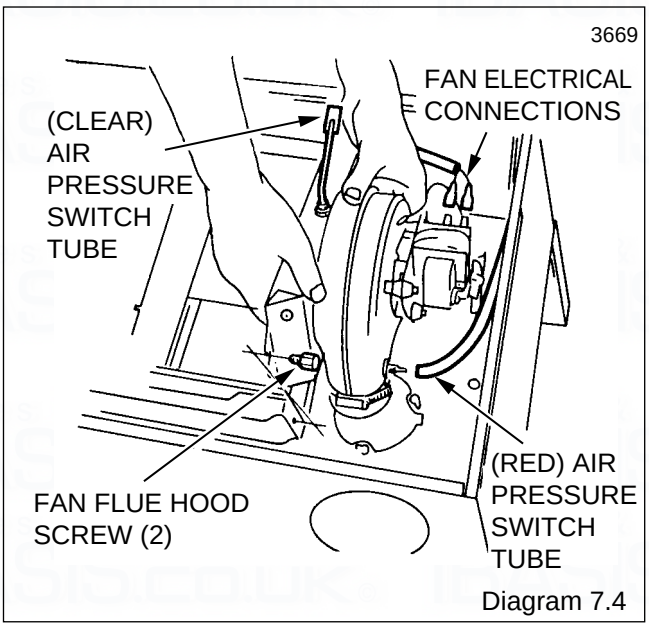

Diagram 7.4

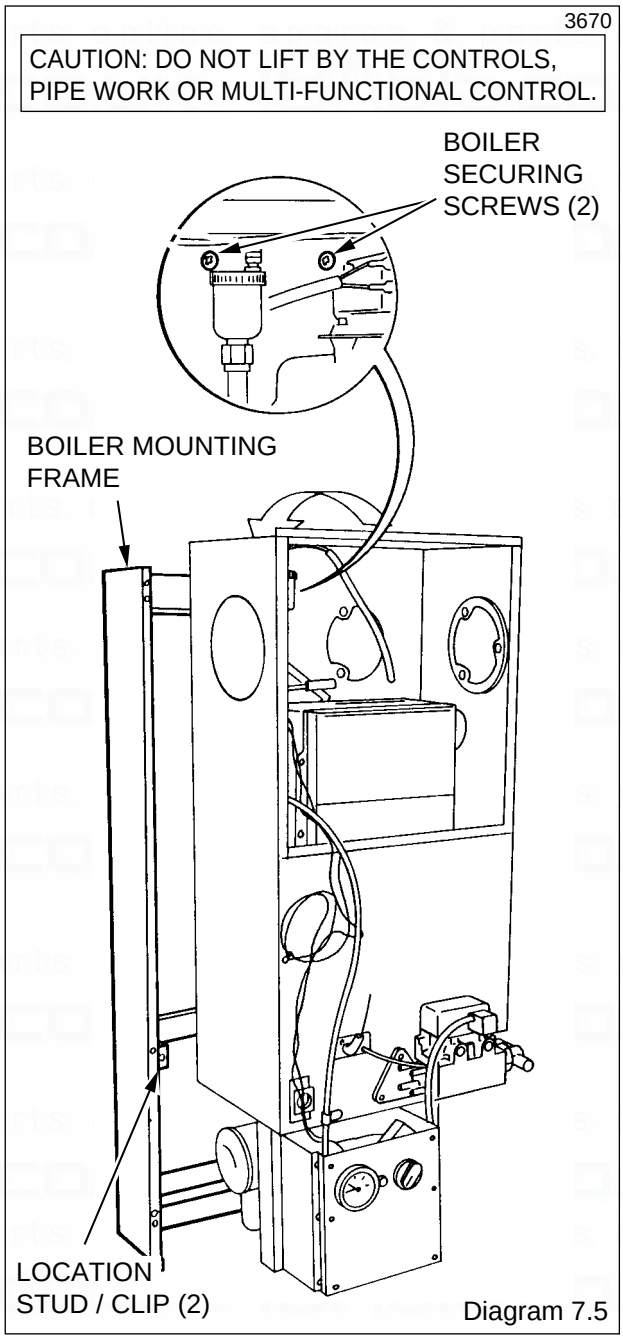

Diagram 7.5

7.4 Safety Valve Discharge

WARNING. It must not discharge above an entrance or window or any type of public access area.

Release the multi-functional control cable from the securing clip and then remove the fascia securing screws and pivot out, see diagram 7.6.

The discharge pipe is supplied loose with the boiler, which when fitted to the safety valve, will end below the boiler, see diagram 7.7.

This must be extended, using not less than 15mm od pipe, to discharge, in a visible position, outside the building, facing downwards, preferably over a drain. The pipe must have a continuous fall and be routed to a position such that any discharge of water, possibly boiling, or steam cannot create a hazard to persons or damage to property or external electrical components or wiring.

Note: To make future servicing easier it is advisable to use compression type fittings when extending the discharge pipe.

7.5 Electrical Connection

The electrical installation must comply with the current issue of BS7671 and any local regulations which apply.

WARNING: The boiler must be earthed.

With the fascia pivoted open.

Take the incoming supply through the restraining clamp, see diagram 7.9.

Standard colours are, brown - live (L), blue - neutral (N) and green/yellow - earth (E). ⏚

The mains cable outer insulation must not be cut back external to the restraining clamp.

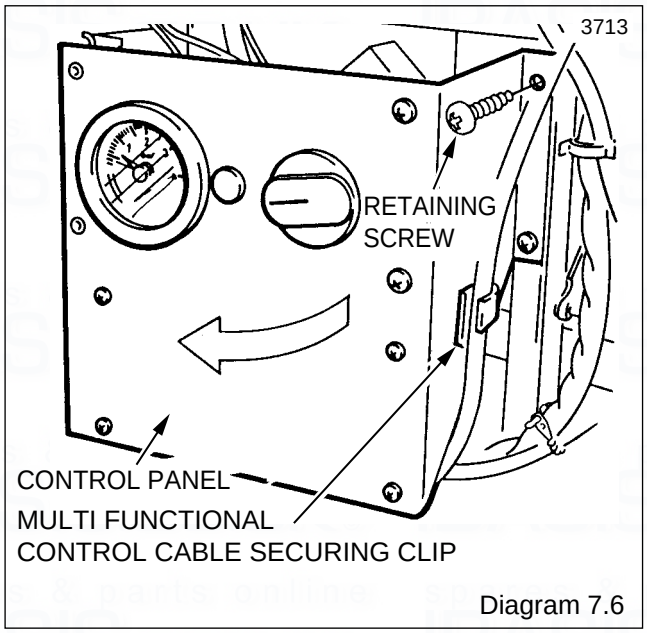

Diagram 7.6

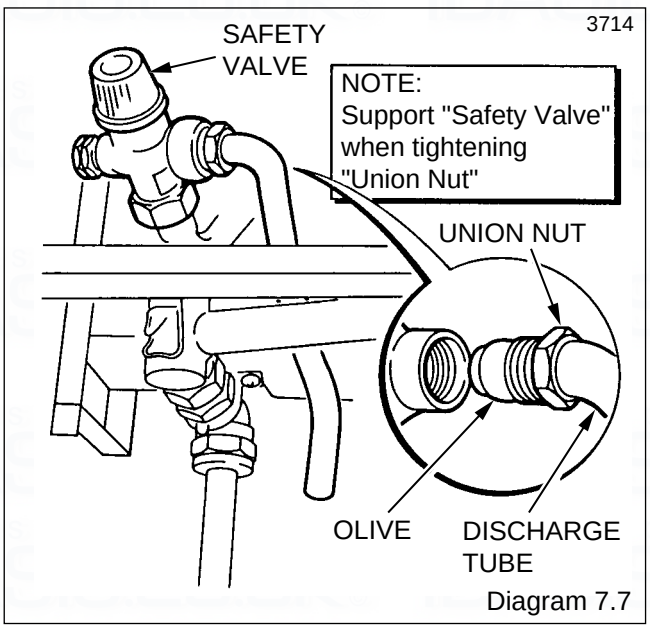

Diagram 7.7

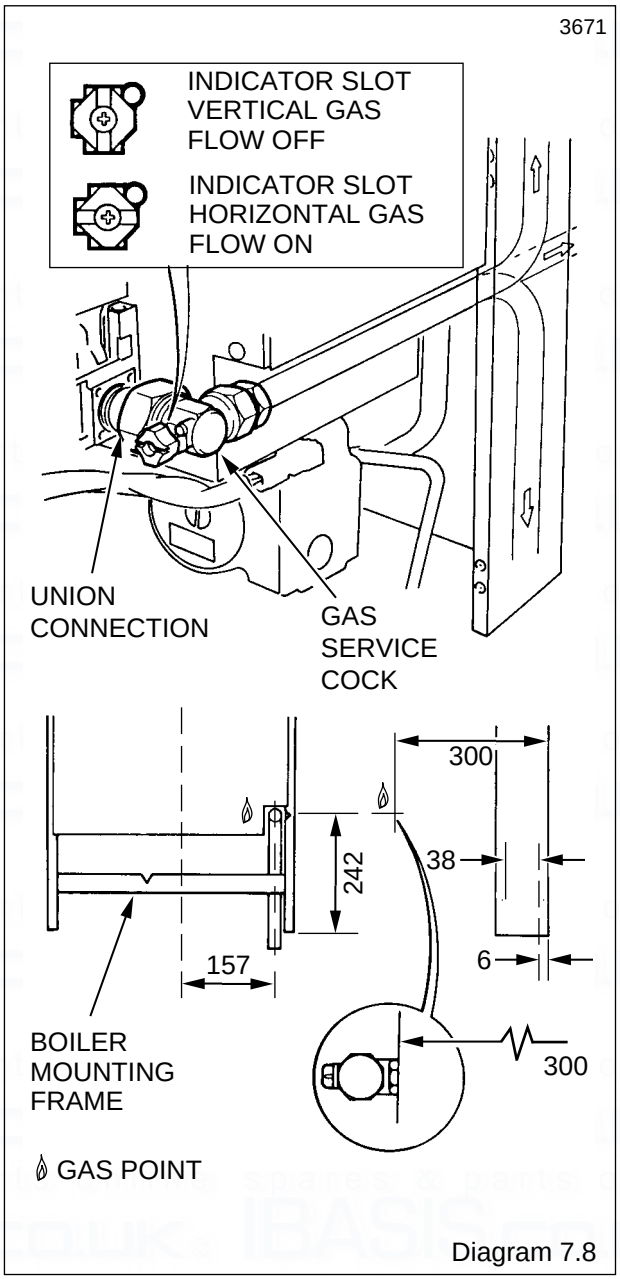

Diagram 7.8

Connect the main supply up to the terminal block, see diagram 7.9.

The earth conductor must be of a greater length than the other conductors so that if the cable is strained the earth would be the last to become disconnected.

With a suitable meter carry out electrical system checks.

Test the insulation resistance of the mains cable to earth.

Test the polarity of the mains cables.

Check earth continuity and short circuit of cables.

Replace the fascia and secure.

Secure the cables away from hot surfaces.

7.6 Flue Connection

Secure the flue assembly to the boiler, using the previously fitted dogpoint screws, see diagram 7.10.

Ensure the correct location of the flue to the boiler.

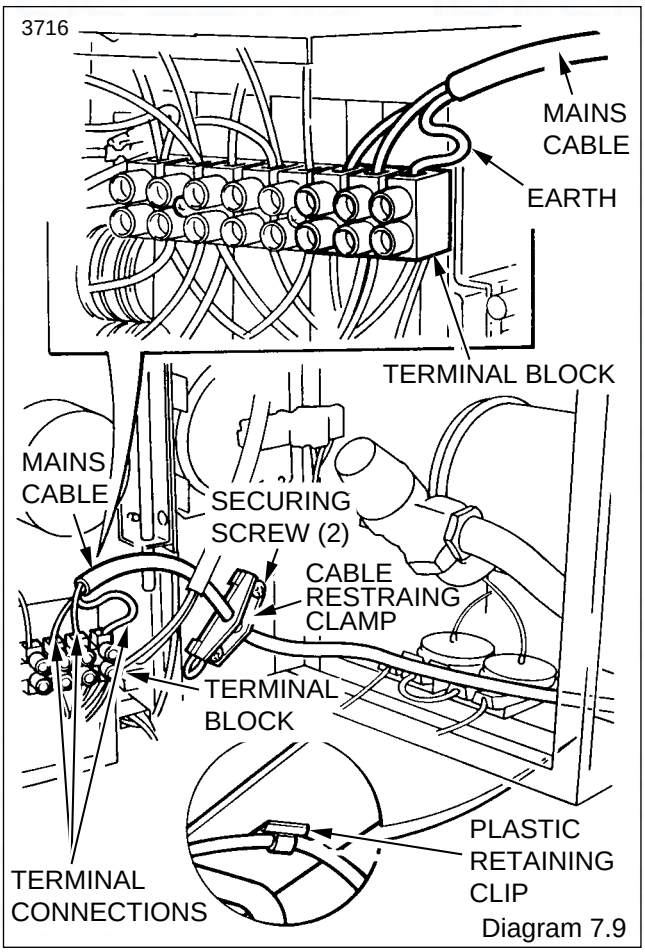

Diagram 7.9

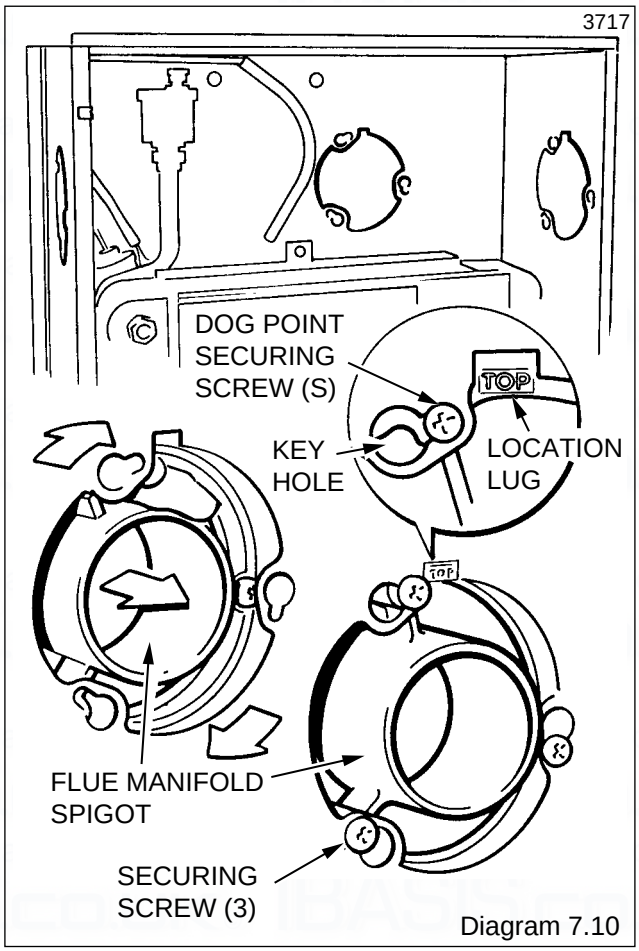

Diagram 7.10

7.7 Rear Flue Boiler Installation

Fit fan/fluehood assembly by engaging the fan outlet extension over the flue manifold spigot, see diagram 7.11.

Secure the fluehood assembly to the heat exchanger with the screws previously removed, see diagram 7.11.

Reconnect the purple and red electrical connections to the fan (the polarity of the connections is not important).

Reconnect the air pressure switch tubes as shown in diagram 7.4.

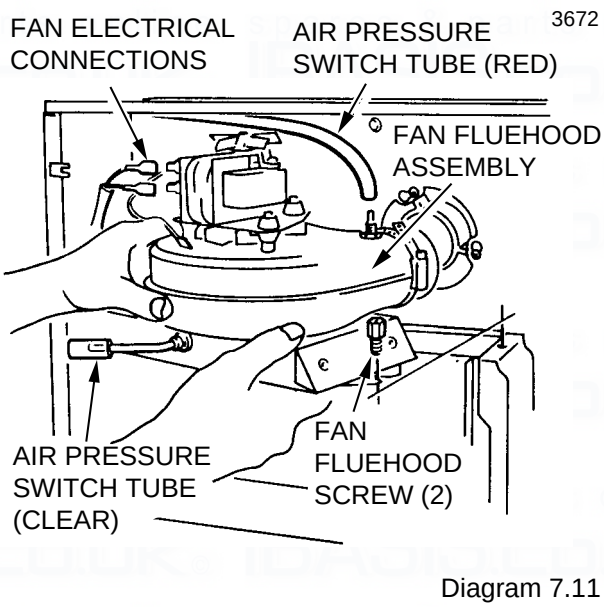

Diagram 7.11

7.8 Side Flue Boiler Installation

Remove the fan assembly from the fluehood assembly, by removing the screws, see diagram 7.12.

Partially refit the securing screws into the fan.

Turn the fan assembly to the required flue outlet direction.

Fit the flue hood over the partially fitted securing screws in the special keyhole slot, sandwiching the spacer gaskets, between the two, gaskets take care not to damage the gaskets, see diagram 7.12.

Turn the fluehood to the required direction.

Remove and discard the fan rear outlet extension from the fan by releasing the clip.

Fit the fan side outlet extension, supplied in the loose items pack, see diagram 7.13.

Secure with the clip previously removed.

Continue by loosely fitting one extended brass fluehood/ fan assembly screw to the heat exchanger on the side that the flue exits. Slide the fluehood/fan assembly flange under this extended brass screw whilst turning the assembly to enable engagement of the fan outlet extension onto the flue manifold spigot, see diagram 7.14.

When correctly located, secure the assembly by fitting the other extended brass screw and tighten both down.

Reconnect the purple and red electrical connections to the fan, the polarity of the connections is not important.

Reconnect the air pressure switch tubes, see diagram 7.4.

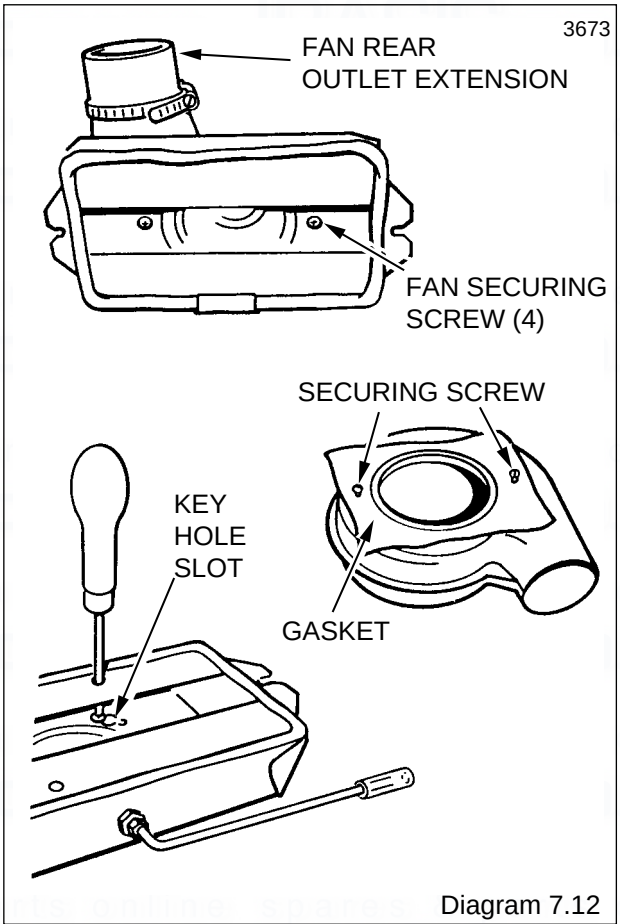

Diagram 7.12

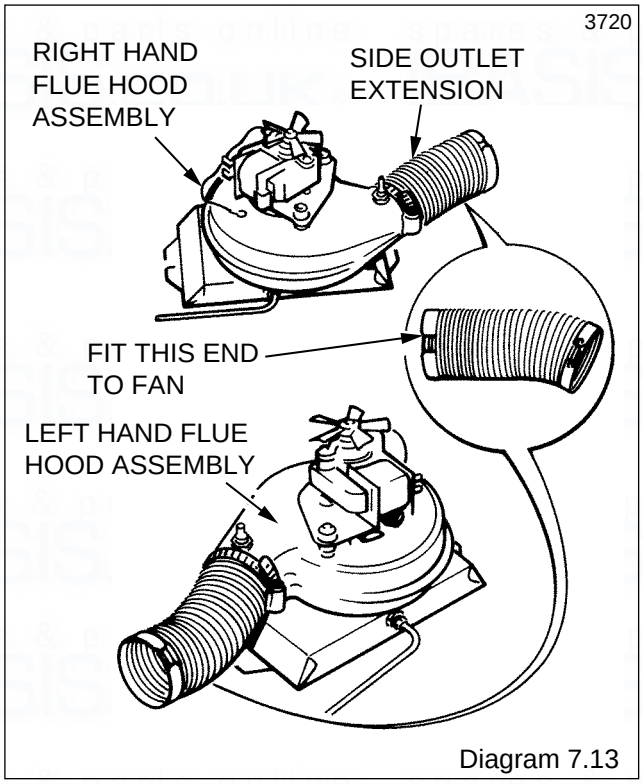

Diagram 7.13

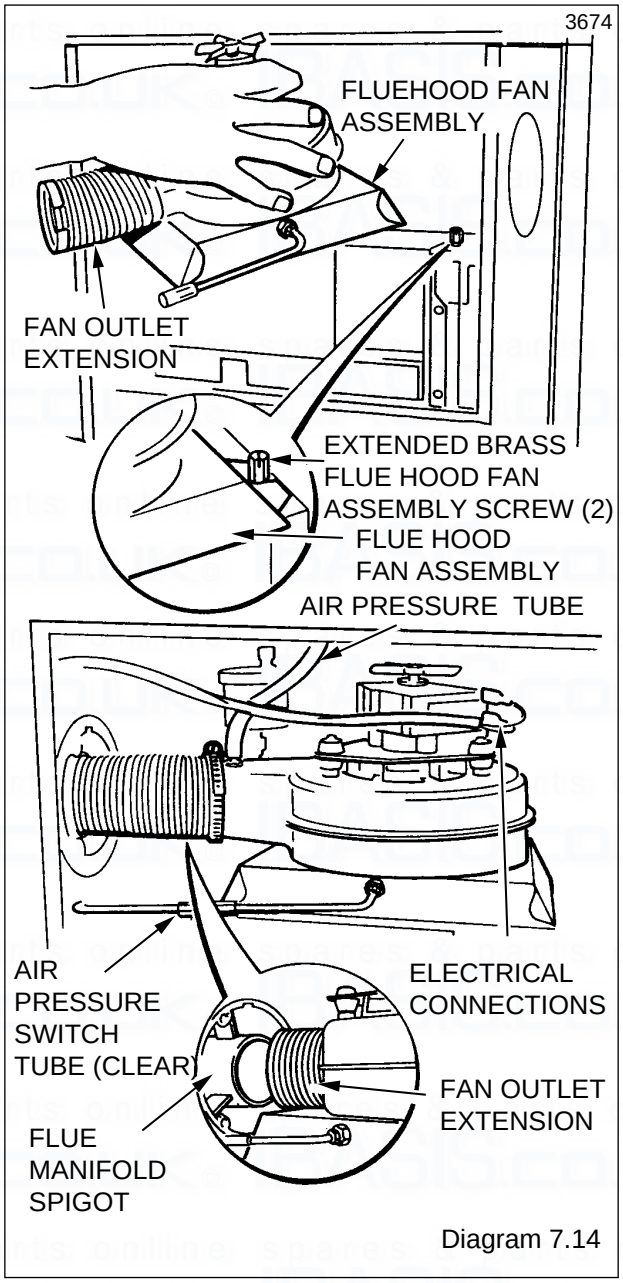

Diagram 7.14

8.1 System Commissioning

Commissioning must only be carried out by a competent person in accordance with the current issue of BS6798.

Check that the boiler is isolated from the electrical supply at the external isolator.

Open the water isolating valves, see diagram 8.1.

Fill the system, check the operation of the safety valve, by allowing the water pressure to rise until the valve operates. The valve should open within +/-0.3bar (+/-4.3lbf/in^2) of the 3 bar, preset, pressure. Where this is not possible carry out a manual check and test.

Clear any air locks and check for water

soundness.

Release cold water to initial (cold fill) system design pressure.

The set pointer on the pressure gauge should be set to the initial design pressure.

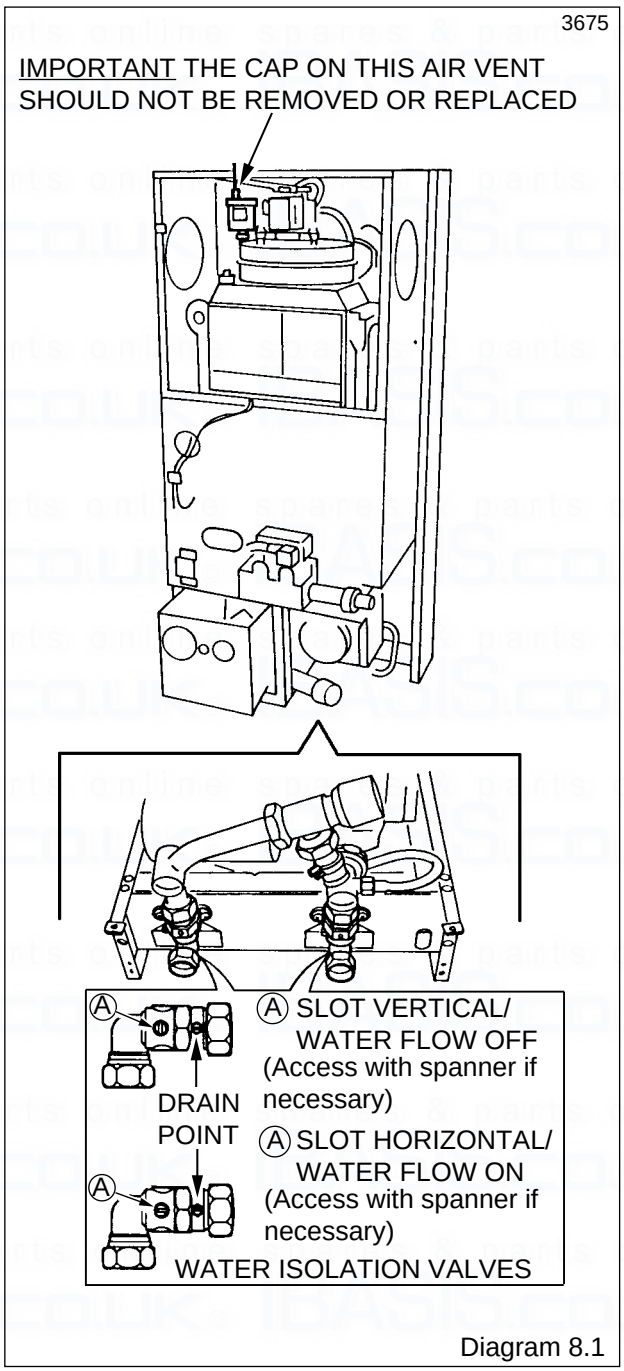

Diagram 8.1

9.1 Initial Lighting and Testing and Adjustment

Refit the inner case, by hooking it over at the top and securing it with the screws previously removed at the bottom, see diagram 9.1.

Make sure that the case is correctly fitted and sealed.

Check that the boiler is isolated from the electrical supply.

Make sure that the control thermostat is turned to the “Off” position, see diagram 9.2.

Turn the gas service cock “On”, see diagram 9.2.

The pilot rate is preset and MUST NOT be adjusted.

For future reference stick the self adhesive arrow indicator, from the loose items pack, to the data label against the rating the boiler is going to be set to.

Loosen the main burner pressure test point screw and fit a suitable pressure gauge, see diagram 9.2.

Make sure that any remote controls are calling for heat.

Switch on or connect the electrical supply to the boiler and heating system.

WARNING. All the electrical equipment works on MAINS voltage, terminals will become “Live”.

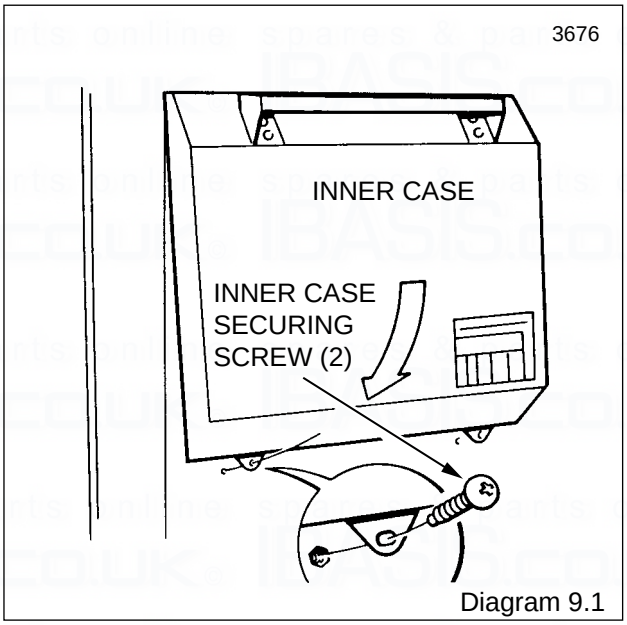

Diagram 9.1

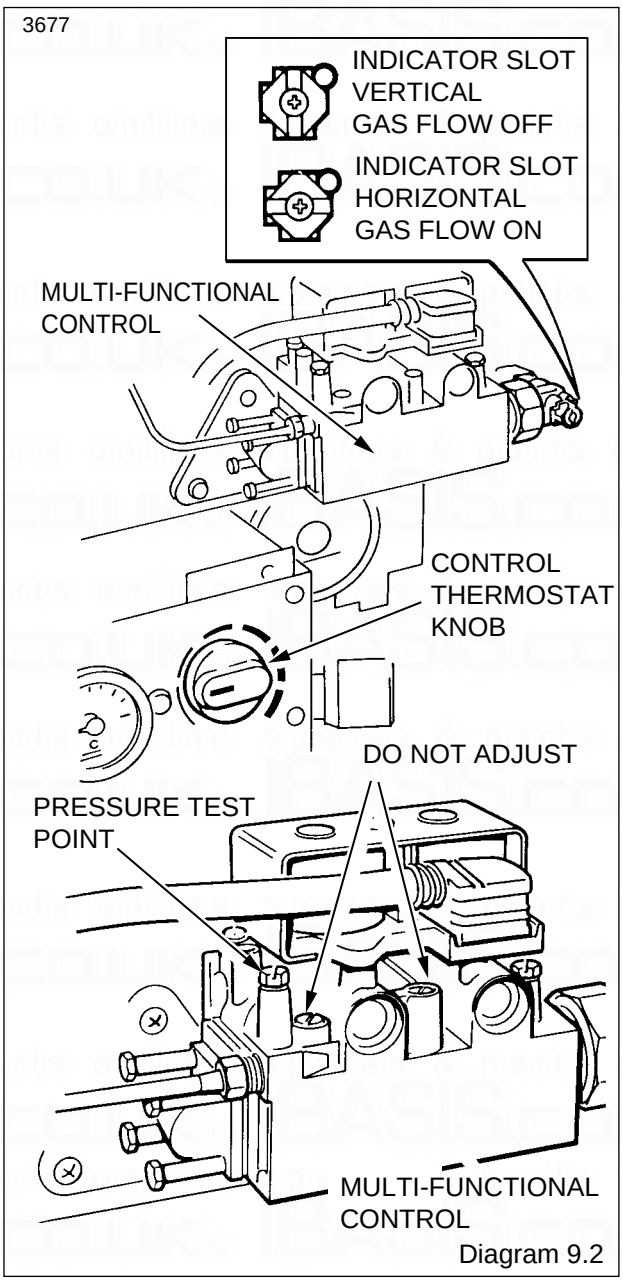

Diagram 9.2

9.2 Testing - Electrical

Checks to ensure electrical safety should be carried out by a competent person.

In the event of an electrical fault after installation of the system, preliminary electrical system checks as below should be carried out.

1. Test insulation resistance to earth of mains cables.

2. Test the earth continuity and short circuit of all cables.

3. Switch on the electrical supply to the boiler and test the polarity of the mains supply.

Turn the control thermostat knob fully clockwise to the maximum setting, which is about 82°C (180°F).

The lighting sequence is automatic, as follows:

The fan operates

The spark ignition operates

The pilot solenoid opens

The pilot burner lights

The ignition spark stops

The main solenoid opens -

and after a short period of time the main burner will light, view through window.

The main burner will stay alight until switched off, either by the control thermostat or a remote system control.

(When the boiler switches “Off”, both the pilot and main burner go out. The automatic lighting sequence will operate again when heat is required).

Note: If air is present, this may, in certain circumstances cause the cutoff device(s) to trip. If this happens, reset, see diagram 12.5 and operate the control thermostat on a low setting until all the air is expelled.

9.3 Testing - Gas

With the boiler on proceed as follows:

Test for gas soundness around the boiler gas components using a suitable leak detection fluid, in accordance with the current issue of BS6891.

Check the main burner gas pressure at least 10 minutes after the burner has lit, refer to data label.

If necessary adjust the gas pressure to obtain the required setting (screw at rear of multi-functional control) turning anti-clockwise, viewed from front, to decrease the pressure, see diagram 9.3.

Should any doubt exist about the gas rate, check it using the gas meter test dial and a stop watch, at least 10 minutes after the burner has lit, making sure that all other gas burning appliances and pilot lights are off.

SPACE SAVER COMPLHEAT 30-GAS RATE			
	min	med	max
m^3/h	0.7	0.9	1.1
ft^3/h	25.5	31.5	37.5
SPACE SAVER COMPLHEAT 40-GAS RATE			
	min	med	max
m^3/h	1.1	1.2	1.4
ft^3/h	38	44	50
SPACE SAVER COMPLHEAT 50-GAS RATE			
	min	med	max
m^3/h	1.5	1.6	1.8
ft^3/h	52	58	63

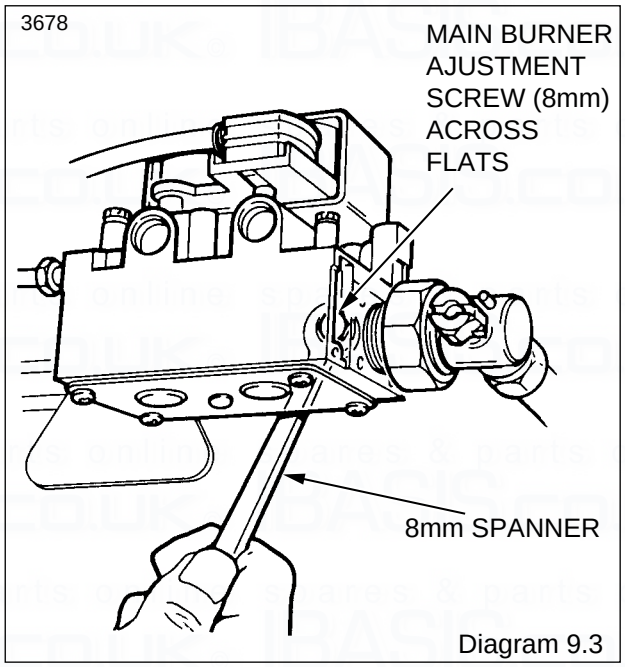

Diagram 9.3

Turn the control thermostat control knob fully anti-clockwise to “Off”.

Remove the pressure gauge from the test point and refit the screw, making sure that a gas tight seal is made.

When the control thermostat is turned to the “Off” position, by hand, wait at least 30 seconds before turning “On” again.

There may be an initial smell given off from the boiler when new, this is quite normal and it will disappear after a short period of time.

9.4 Heating System

Check that all remote controls are calling for heat.

Allow the system to reach maximum working temperature and examine for water leaks. The boiler should then be turned off and the system drained as rapidly as possible whilst still hot.

Refill the system, vent and again check for water soundness.

Adjust the system to initial design pressure, using an external drain tap. The set pointer on the pressure gauge should be set to coincide with the indicating pointer.

9.5 Operational Checks

Adjust the control thermostat and any system controls to their required settings.

Do not attempt to adjust the thermostat calibration screw.

Operate the boiler again on full service and check that the balancing is satisfactory, making adjustments as necessary.

Note: If air is present, this may, in certain circumstances cause the cutoff device(s) to trip. If this happens, reset, see diagram 12.5 and operate the control thermostat on a low setting until all the air is expelled.

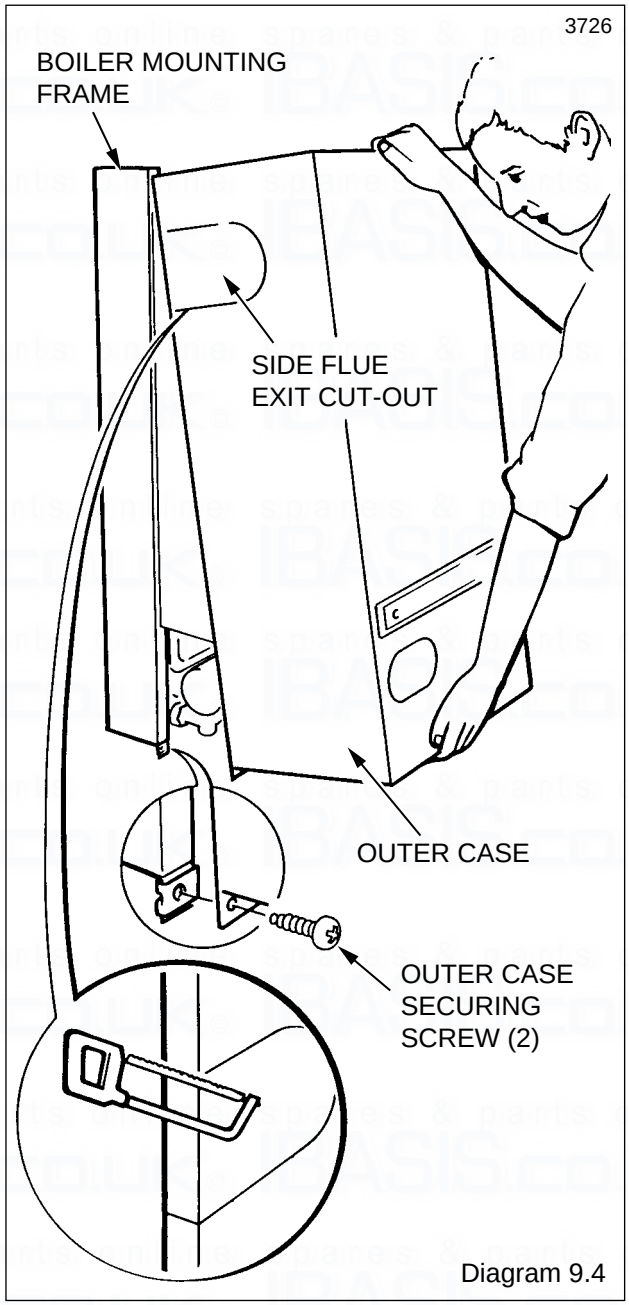

Diagram 9.4

9.6 Outer Case

Refit the case, if for a side flue, make sure that the appropriate cutout is made, see diagram 9.4 and secure with the screws from the fittings pack.

10 Instructions to the User

Hand the Instructions for Use to the user for their retention.

Instruct and demonstrate the efficient and safe operation of the boiler, heating system and if fitted, the domestic hot water system.

Advise the user of the precautions necessary to prevent damage to the system and building in the event of the heating system being out of use during frost and freezing conditions.

Advise the user, that to ensure the continued efficient and safe operation of the boiler it is recommended that it is checked and serviced at regular intervals.

The frequency of servicing will depend upon the particular installation conditions and usage, but in general once a year should be enough.

Draw attention, if applicable, to the current issue of the Gas Safety (Installation and Use) Regulations, Section 35, which imposes a duty of care on all persons who let out any property containing a gas appliance.

It is the Law that servicing is carried out by a competent person.

Reminder, leave these instructions with the user.

11 Servicing

11.1 General

To ensure the continued efficient and safe operation of the boiler it is recommended that it is checked and serviced as necessary at regular intervals. The frequency of servicing will depend upon the particular installation conditions and usage, but in general once a year should be enough.

It is the Law that servicing must be carried out by a competent person.

BEFORE STARTING A SERVICE ISOLATE THE BOILER FROM THE ELECTRICAL SUPPLY AND TURN THE GAS SUPPLY OFF AT THE GAS SERVICE COCK.

After completing any servicing of gas carrying components, ALWAYS test for gas soundness and carryout functional check of check of controls.

Unless stated otherwise, all parts are replaced in the reverse order to removal.

Note: As an aid to Servicing the air pressure switch tube connections can be used to obtain a products of combustion reading.

Remove the outer case as described in Section 11.2.

Remove the RED tube from the connection on the air pressure switch and insert the analyser probe into the tube.

Switch on the electrical supply to operate the fan and turn the gas supply on.

On completion of the test switch off the electrical and gas supplies and reconnect the red tube to the air pressure switch.

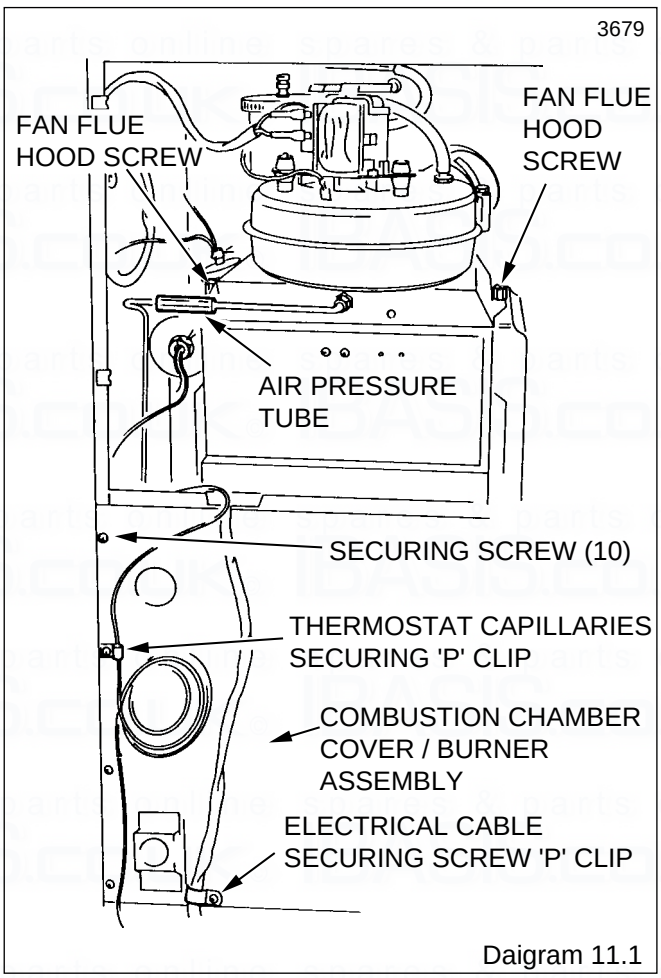

Daigram 11.1

11.2 Access

To remove the outer case, unfasten the screws, see diagram 9.4, unhook at the top and lift off.

To remove the inner case, unfasten the screws, see diagram 9.1 unhook at the top and lift off.

Routine Servicing

Gain access as Section 11.2.

11.3 Cleaning the Heat Exchanger

Slacken the flue hood by loosening the extended brass screws at the left and right hand sides, see diagram 11.1.

Remove the capillaries retaining “P” clip, taking care not to kink the capillaries, see diagram 11.1.

Disconnect the multi-functional control plug and then gas service cock, at the union connection, see diagram 11.2.

Disconnect the ignition lead from the electrode.

Remove the combustion chamber cover/burner assembly by removing the ten securing screws and “P” clip securing screw, withdraw the complete assembly, see diagram 11.1.

Remove the rear flueway cleaning plate, see diagram 11.3.

Remove the combustion chamber/heat exchanger cover, by removing the eight securing screws, see diagram 11.3.

Place a sheet of paper in the base of the combustion chamber.

Remove the three baffles, see diagram 11.4.

The heat exchanger can now be cleaned with a suitably sized semi-stiff brush, using the cleaning plate, as shown in diagram 11.5, to protect the rear insulation panel.

Do not use a brush with metallic bristles.

Remove the paper and debris from the combustion chamber.

Correctly refit the three baffles previously removed, each is marked TOP on its upper face.

Refit the heat exchanger front cover.

Tighten down the fan flue screws.

Refit the cleaning plate.

11.4 Main Burner

Remove the main burner by releasing the two securing nuts as shown in diagram 11.6. Brush or vacuum away any deposits, make sure that the flame ports are clean.

Do not use a brush with metallic bristles.

11.5 Main Injector

The main injector can be removed and cleaned, see diagram 11.6.

When cleaning the injector do not use a wire or sharp instrument on the hole.

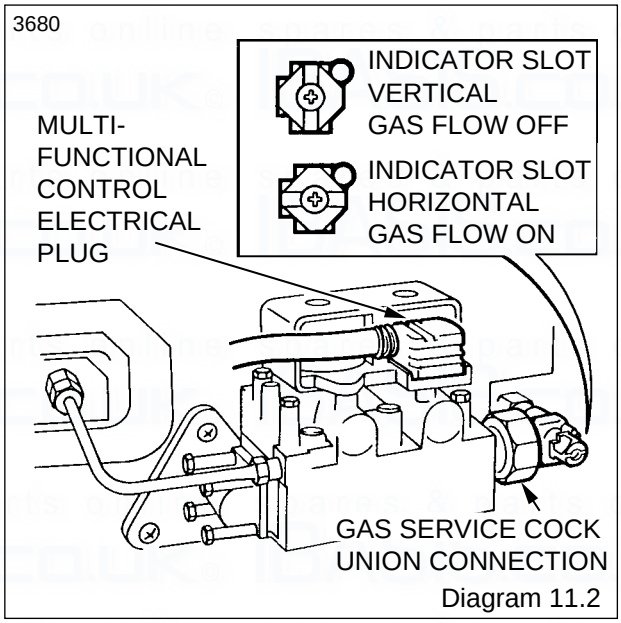

Diagram 11.2

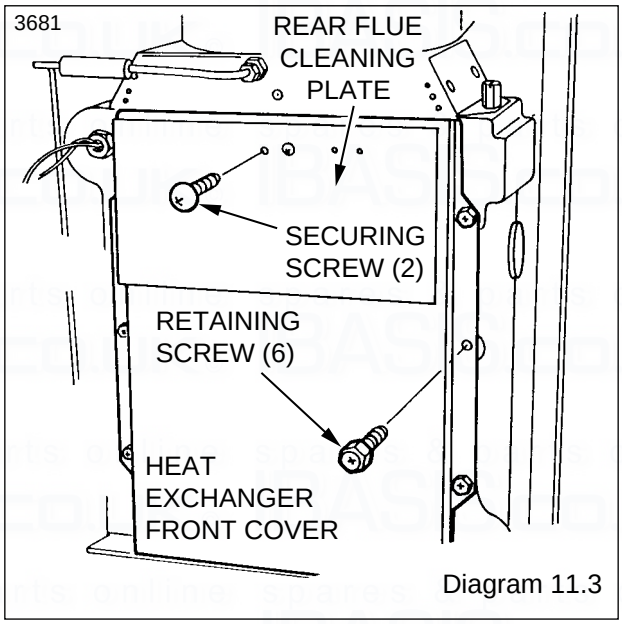

Diagram 11.3

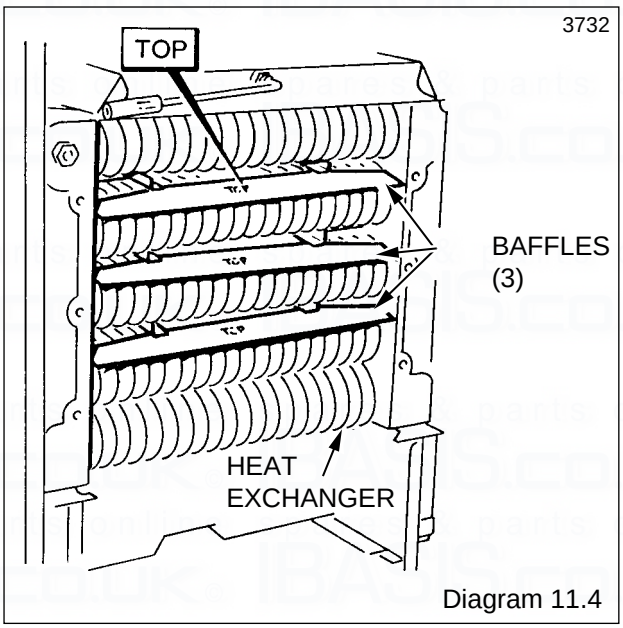

Diagram 11.4

11.6 Pilot Burner, Ignition Electrode and Pilot Injector

Unscrew the tubing nut at both ends releasing the pilot tube, see diagram 11.7.

Remove the pilot burner securing screws to release the pilot burner and electrode assembly, see diagram 11.7.

Clean the pilot burner and electrode.

Remove the pilot injector by unscrewing it from the pilot burner, clean it by blowing through it.

When refitting take care not to damage the electrode and check that the spark gap is as shown in diagram 11.7.

11.7 Operational Checks

Remove screws from the fascia and pivot the cover. Check the safety valve manually by turning the knob in the direction of the arrow.

Light the boiler, carryout operational checks and any necessary adjustments as described in Commissioning Section of these instructions.

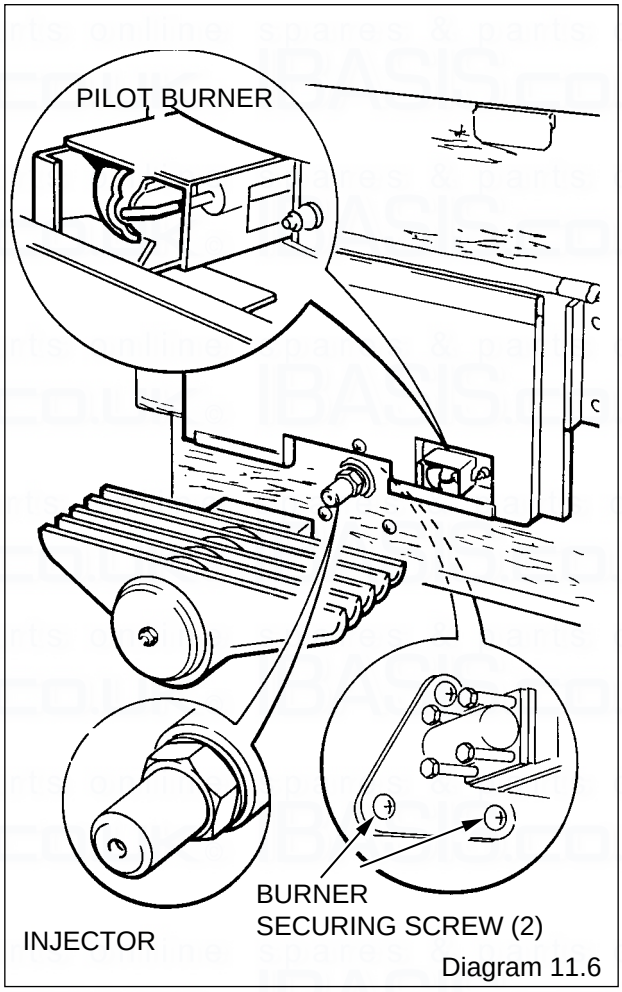

Diagram 11.6

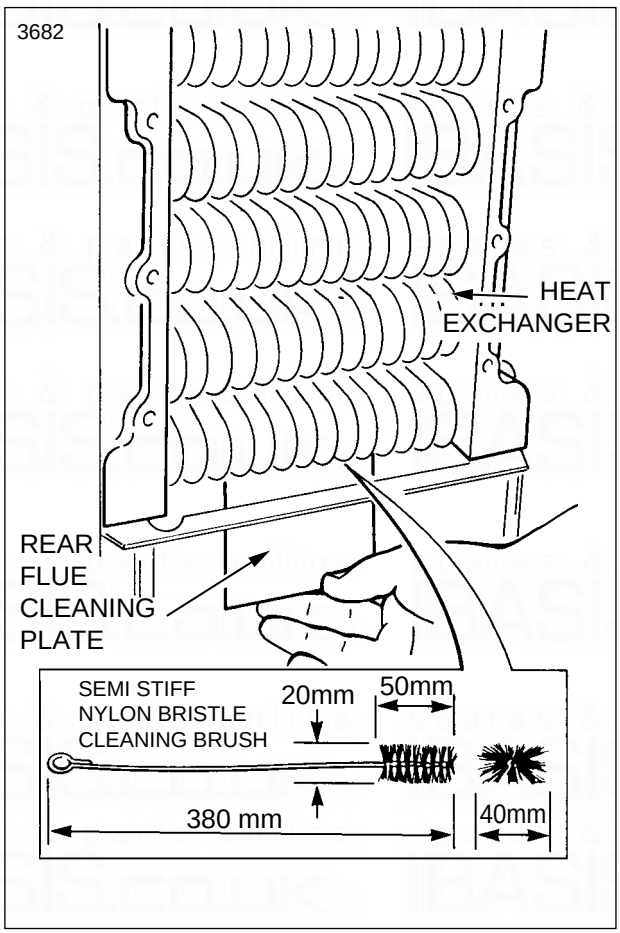

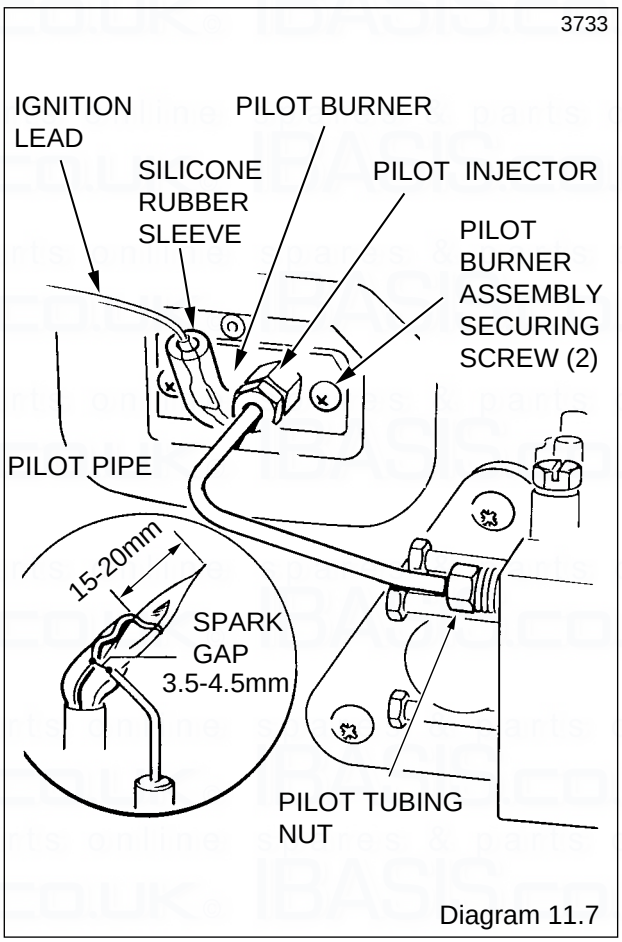

Diagram 11.7

12.1 Electrical

Important. On completion of the Service/Fault Finding task which has required the breaking and remaking of the electrical connections the earth continuity, polarity, short circuit and resistance to earth checks must be repeated using a suitable multimeter.

Refer to: Neon Indicators - Aid to Fault Finding, Diagram 12.1, Fault Finding diagram 12.2, Wiring diagram 12.3 and Functional Flow diagram 12.4.

NEON INDICATORS - An Aid to Fault Finding

THE NEON INDICATORS ARE AN AID TO FAULT FINDING ONLY.
FAILURE OF ANY OF THE NEON INDICATORS DOES NOT WARRANT THE REPLACEMENT OF AN OTHERWISE SATISFACTORY PRINTED CIRCUIT BOARD (PCB).
IF RED NEON ON FASCIA IS ILLUMINATED FILL CENTRAL HEATING SYSTEM, PRESSURE 0.7bar MIN.

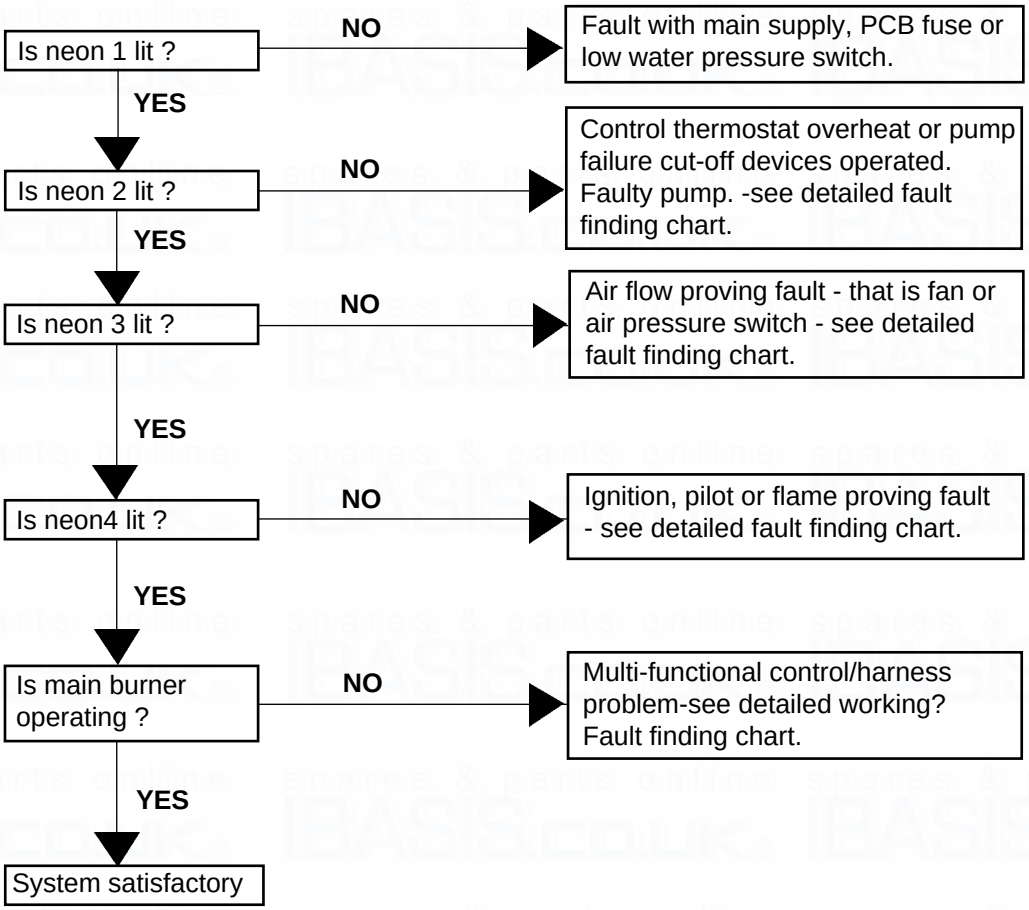

NEON INDICATORS

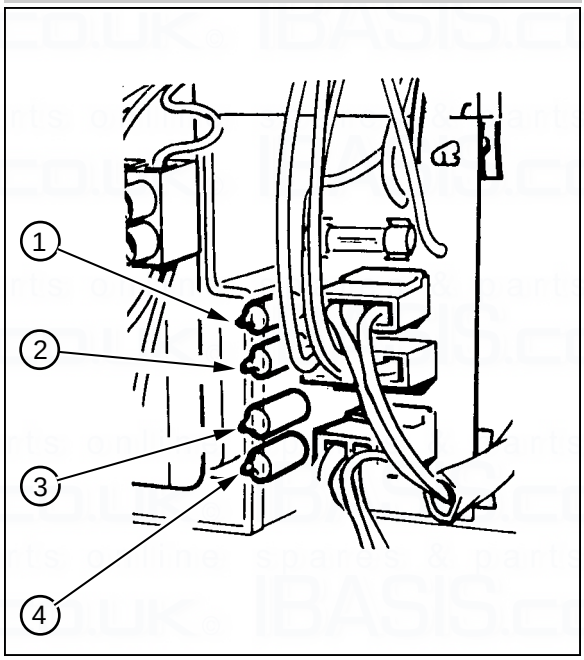

Diagram 12.1

Before detailed checking of electrical components ensure that remote controls are calling for heat. Check that the gas supply is free of obstructions and purged or air. Isolate the electrical supply, check all cables, connections and the printed circuit board (PCB) fuse. Check the air tubes to the air pressure switch for links and splits. Switch on the electrical supply and check for correct polarity. If the red neon on the fascia is illuminated isolate the electrical supply and pressurise the system to 0.7bar minimum with the system cold. Switch on the electrical supply. Turn the control thermostat to it's maximum setting.

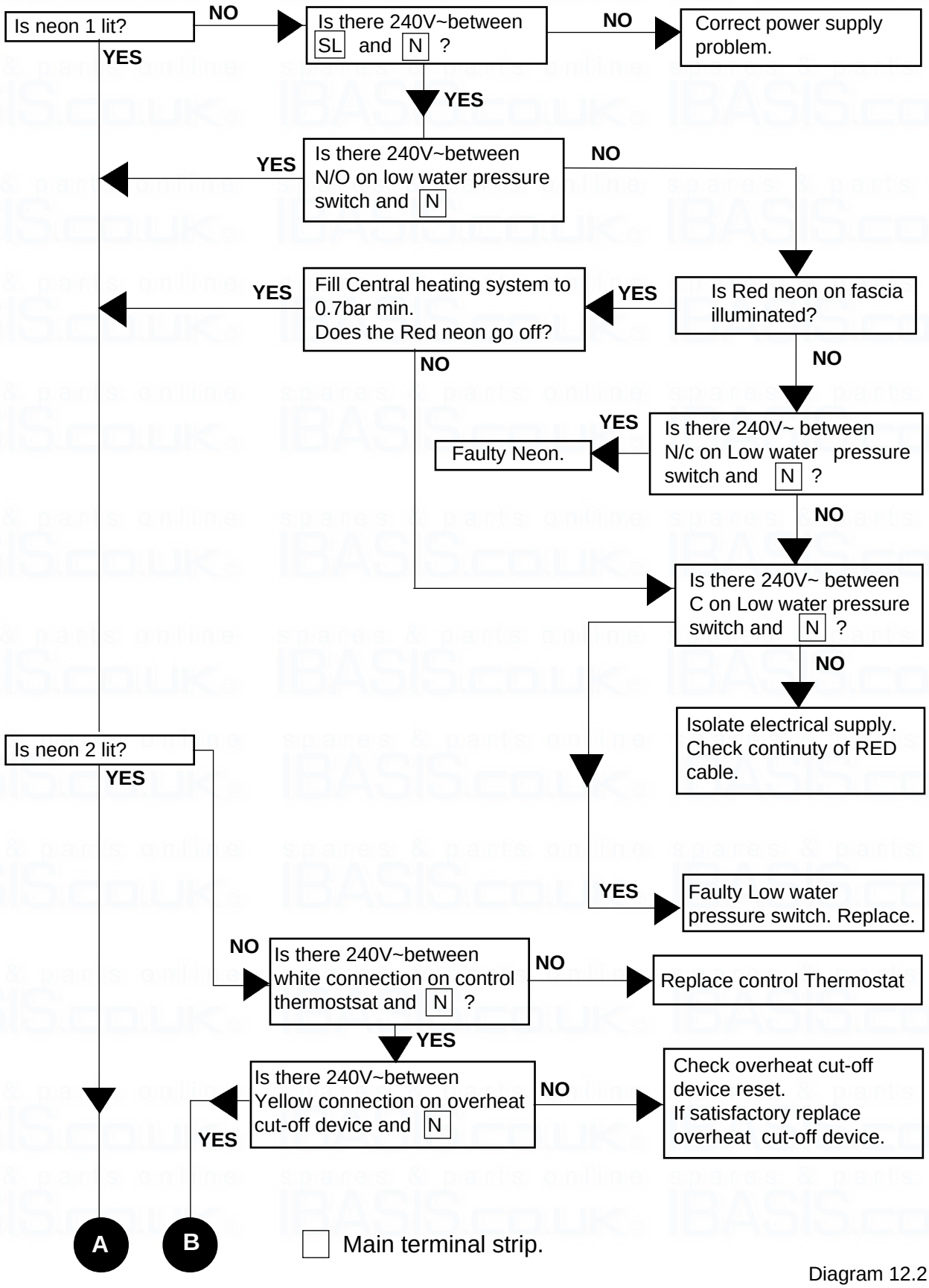

Diagram 12.2

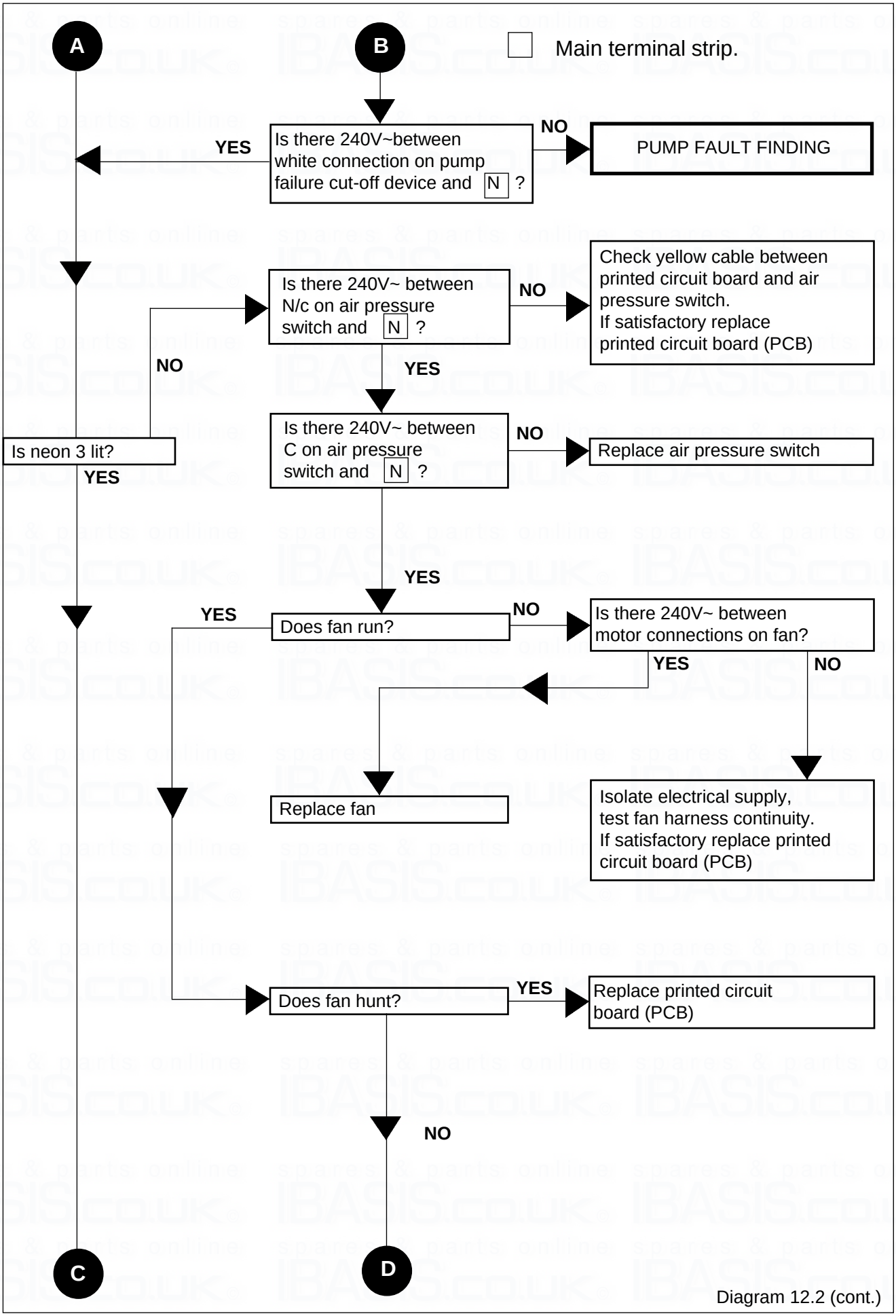

Diagram 12.2 (cont.)

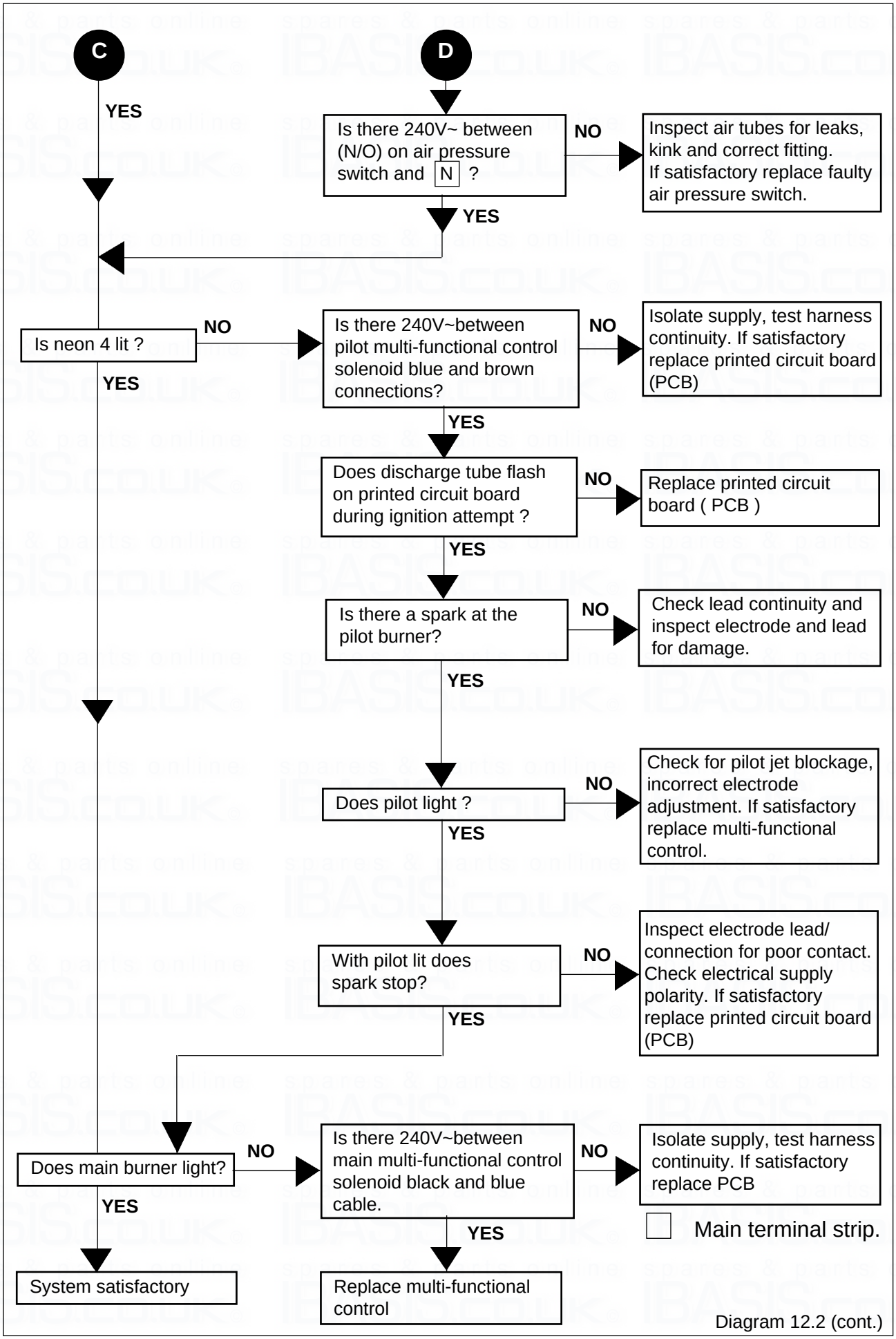

Diagram 12.2 (cont.)

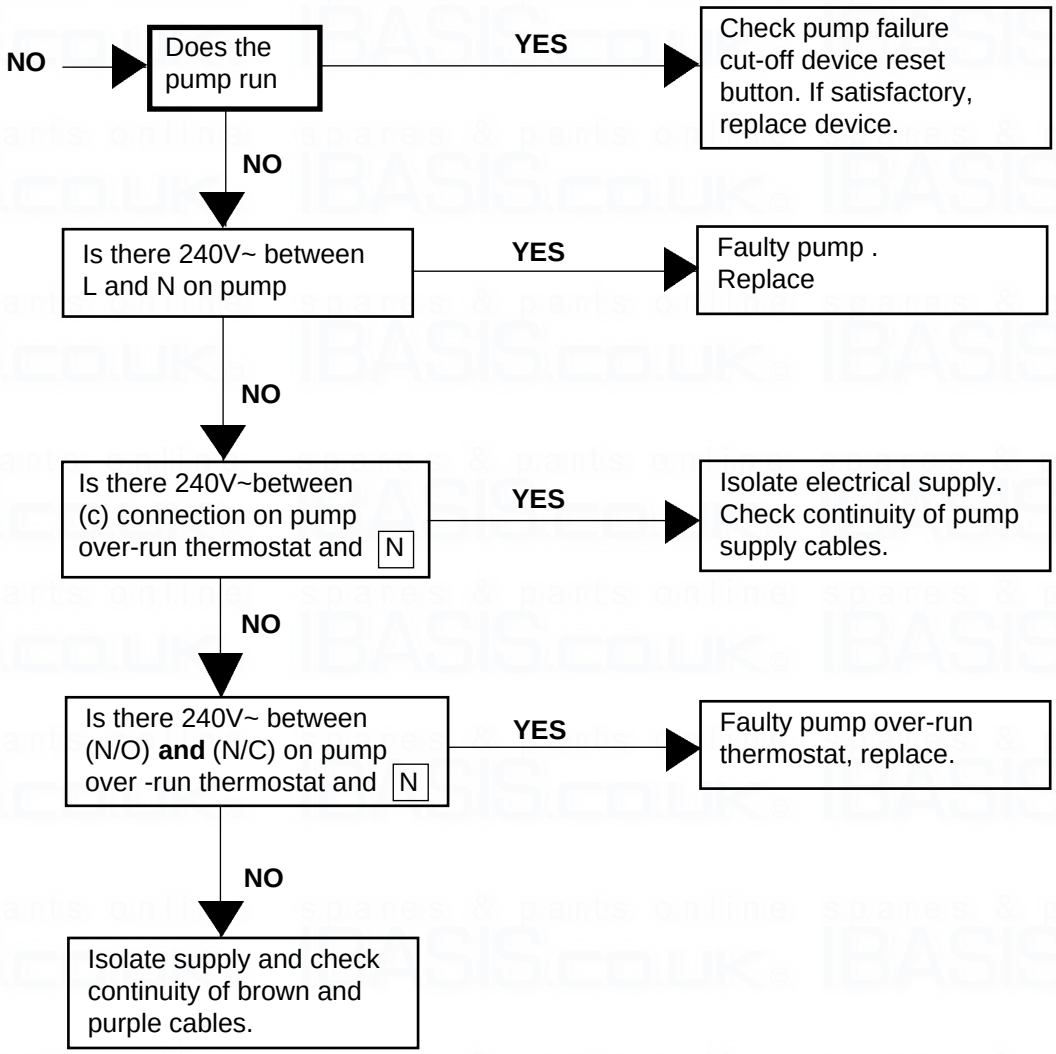

Diagram 12.2 (cont.)

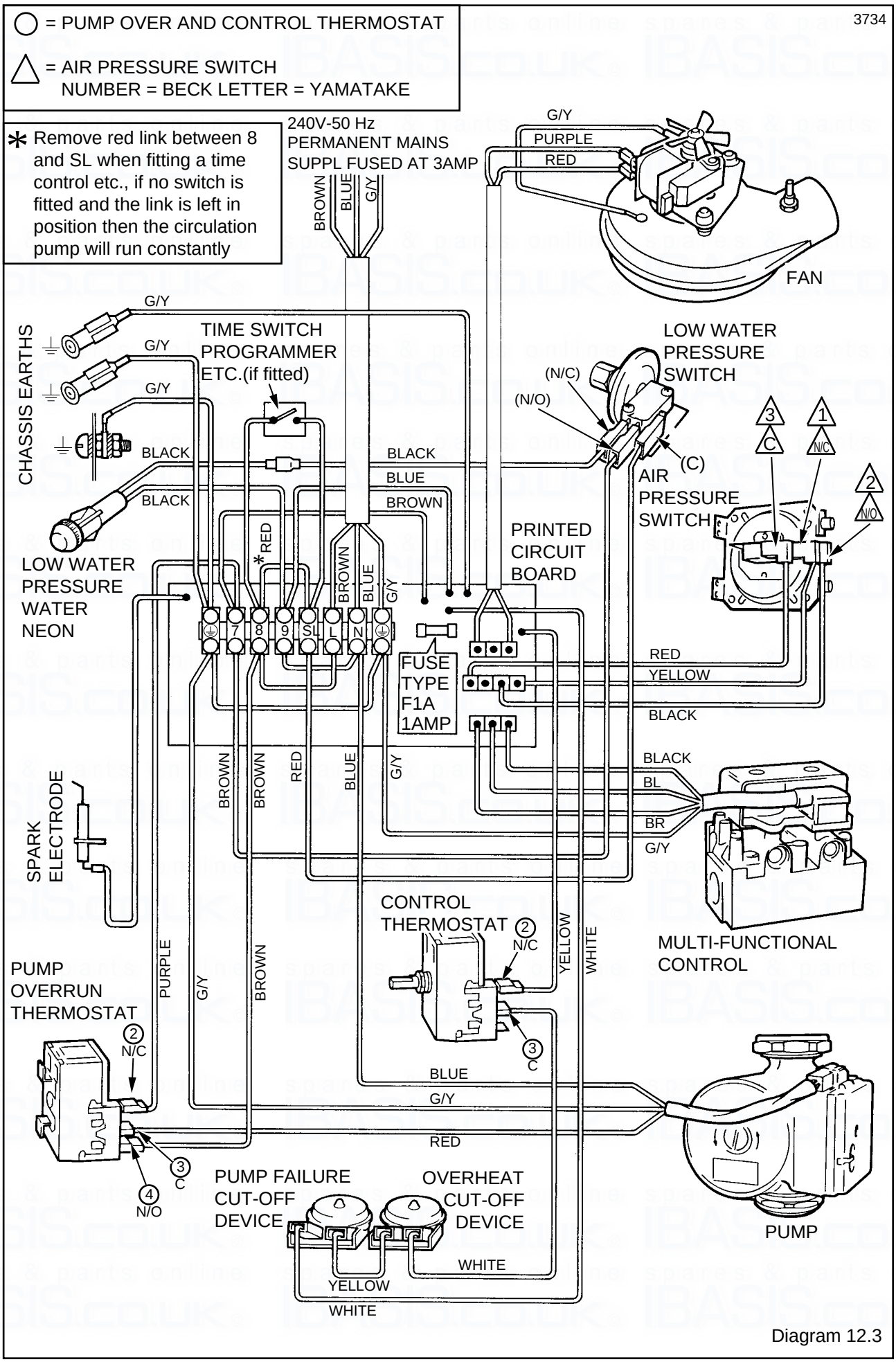
3734
○ = PUMP OVER AND CONTROL THERMOSTAT
△ = AIR PRESSURE SWITCH
NUMBER = BECK LETTER = YAMATAKE
* Remove red link between 8 and SL when fitting a time control etc., if no switch is fitted and the link is left in position then the circulation pump will run constantly
240V-50 Hz
PERMANENT MAINS
SUPPL FUSED AT 3AMP
BROWN
BLUE
G/Y
G/Y
PURPLE
RED
FAN
CHASSIS EARTHS
G/Y
G/Y
G/Y
TIME SWITCH
PROGRAMMER
ETC.(if fitted)
LOW WATER
PRESSURE
SWITCH
(N/C)
(N/O)
(C)
BLACK
BLACK
BLUE
BROWN
BLACK
AIR
PRESSURE
SWITCH
3
C
1
N/C
2
N/O
LOW WATER
PRESSURE
WATER
NEON
*RED
BROWN
BLUE
G/Y
PRINTED
CIRCUIT
BOARD
7
8
9
SL
L
N
FUSE
TYPE
F1A
1AMP
RED
YELLOW
BLACK
BLACK
BL
BR
G/Y
BROWN
BROWN
RED
BLUE
G/Y
SPARK
ELECTRODE
CONTROL
THERMOSTAT
2
N/C
3
C
YELLOW
WHITE
MULTI-FUNCTIONAL
CONTROL
PUMP
OVERRUN
THERMOSTAT
PURPLE
G/Y
BROWN
2
N/C
3
C
4
N/O
BLUE
G/Y
RED
PUMP FAILURE
CUT-OFF
DEVICE
OVERHEAT
CUT-OFF
DEVICE
WHITE
YELLOW
WHITE
PUMP

Diagram 12.3

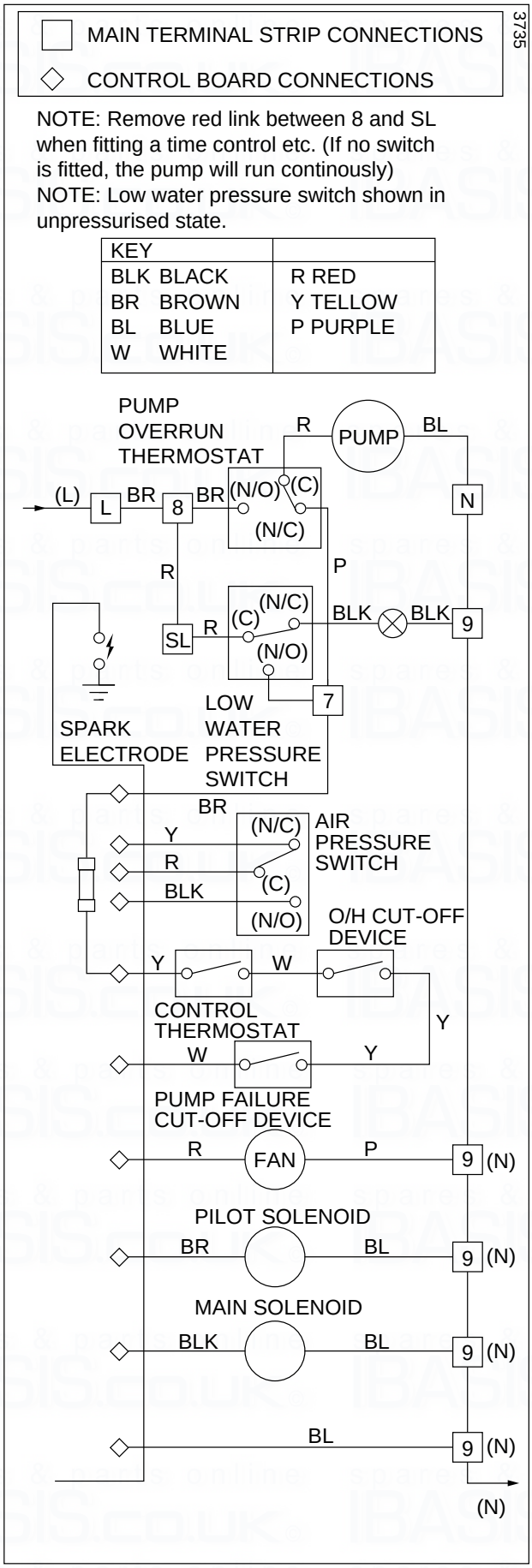

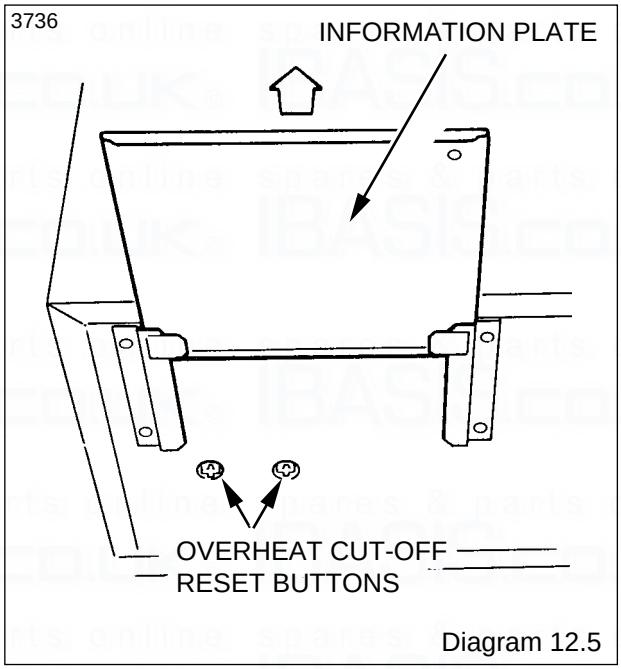

Diagram 12.5

12.2 Electrical Supply Failure

Failure of the electrical supply will cause the burner to go out.

Operation will normally resume on restoration of the electrical supply. If the burner does not relight after an electrical supply failure the cutoff devices may need resetting.

To reset, pull the information panel forwards on the underside of the boiler and press BOTH of the reset buttons, see diagram 12.5.

If the cutoff devices operate at any other time press BOTH the reset buttons and the burner should relight. If the fault persists refer to Fault Finding chart.

13 Replacement of Parts

Replacement of Parts must only be carried out by a competent person.

13.1

Unless stated otherwise, gain access as the appropriate parts of Section 11.2.

BEFORE REPLACING ANY PARTS ISOLATE THE BOILER FROM THE ELECTRICAL SUPPLY AND TURN THE GAS SUPPLY OFF AT THE GAS SERVICE COCK, INDICATOR SLOT TO BE VERTICAL.

After replacing any gas carrying parts always test for gas soundness and if necessary carryout functional check of controls.

Unless stated otherwise, all parts are replaced in the reverse order to removal.

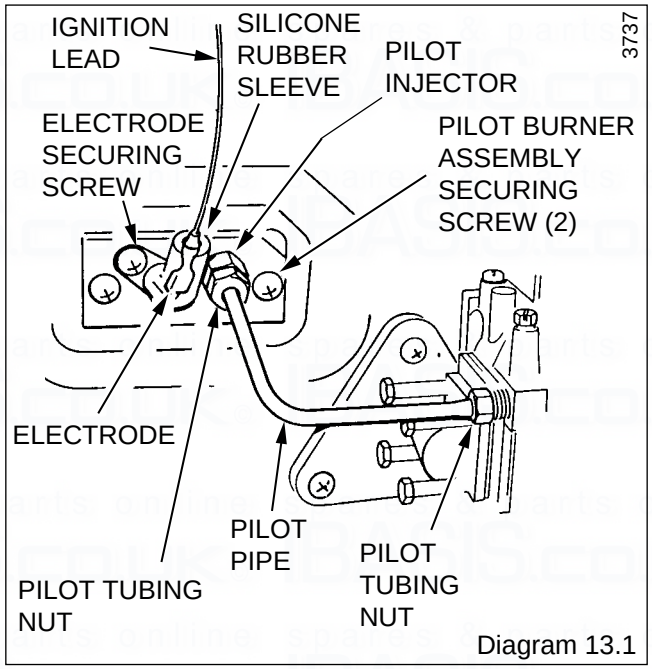

Diagram 13.1

13.2 System Pressure and Draining

All parts containing water within the boiler are under system pressure. Before any parts are disconnected, close the isolating valves and reduce the boiler pressure at the integral drains on the isolating valves, see diagram 8.1.

After replacing any water containing part of the heating circuit, make up the water loss, vent all air and pressurise the system. Refer to Commissioning Section.

13.3 Pilot Burner/Injector and Ignition Lead

Pull off the ignition lead at the electrode, covered with a silicone rubber sleeve, see diagram 13.1.

Gain access to the printed circuit board by removing the multi-functional control cable from the securing clip, fascia securing screws and pivot out, see diagram 7.6. Pull off lead at board, see diagram 13.2.

Unscrew the tubing nuts at both ends releasing the pilot pipe, see diagram 13.1.

Remove the pilot burner by unscrewing the two securing screws as shown in diagram 13.1.

The pilot burner or injector can now be replaced.

13.4 Electrode

Pull off the ignition lead at the electrode, see diagram 13.1.

Pull off the silicone rubber sleeve.

Remove the electrode securing screw, see diagram 13.1.

The electrode can now be replaced.

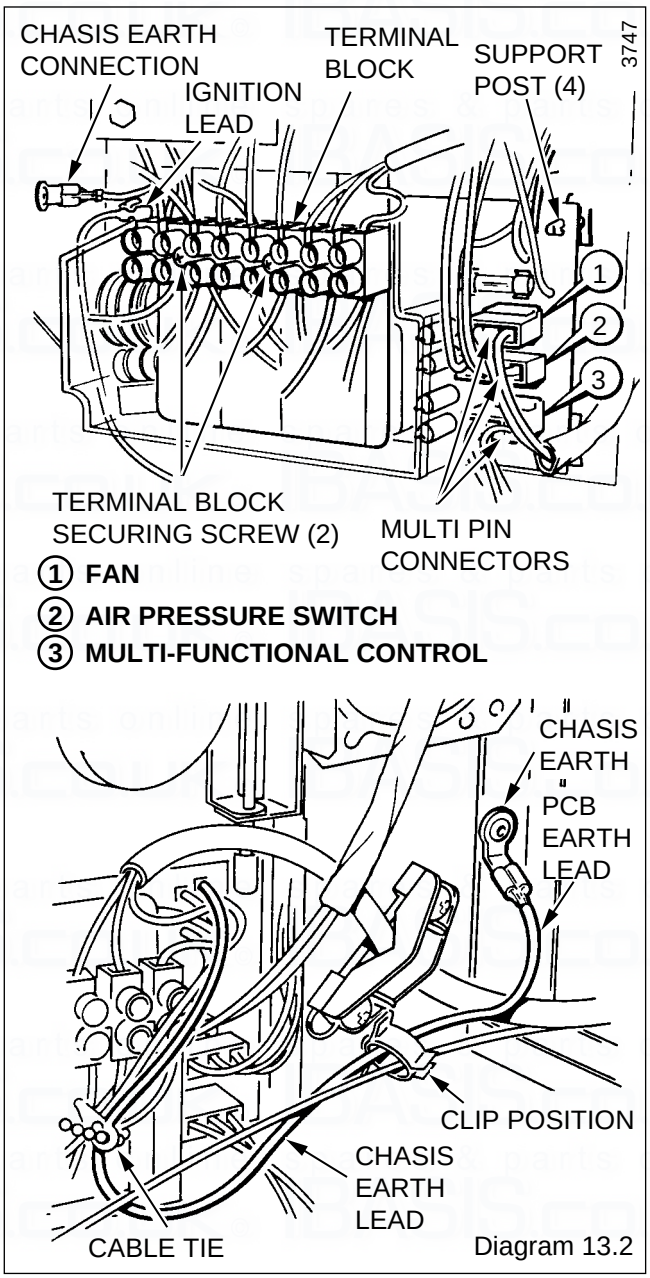

Diagram 13.2

13.5 Printed Circuit Board - (PCB)

Remove the multi-functional control cable from the securing clip, fascia securing screws and pivot out, see diagram 7.6.

Disconnect all multi-pin connectors and the ignition lead.

Remove the blue and brown cables from terminals 9 and 7. Disconnect the yellow cable from the control thermostat and the white cable from the pump failure cutoff device and the PCB earth cable, see diagram 13.2, 13.3 and 13.5.

Unscrew and remove the terminal block and cables complete.

CAUTION. Great care must be taken when handling the printed circuit board (PCB).

Remove the printed circuit board (PCB) from the support posts, noting its correct position.

When connecting the multi-pins and cables to the PCB and terminal block, refer to diagram 12.3, 13.2, 13.3 and 13.4.

13.6 Control Thermostat, Pump Overrun Thermostat

Overheat Cutoff Device

Pump Failure Cutoff Device

Gain access as Section 13.5

Remove the electrical connections from the thermostat body, see diagram 13.3.

Pull off the control thermostat knob, remove screws and release bracket and then remove the locknut nut, see diagram 13.3.

Now remove the phial retaining clips and then the thermostat phials from the pockets, see diagram 13.3.

When refitting, make sure that the thermostat capillaries are correctly routed and the phials covered with heat sink compound, before they are secured in the pockets, by the phial retaining clips.

Reconnect the electrical connections, see diagram 13.3.

Pump Overrun Thermostat

Gain access as Section 13.5

Disconnect electrical connections and release cutoff device, see diagram 13.3.

Now remove the phial retaining clips and then the phials from the pockets, see diagram 13.3.

When refitting, make sure that the capillaries are correctly routed and the phials covered with heat sink compound, before they are secured in the pockets, by the phial retaining clips.

Reconnect the electrical connections, see diagram 12.3 and 13.3.

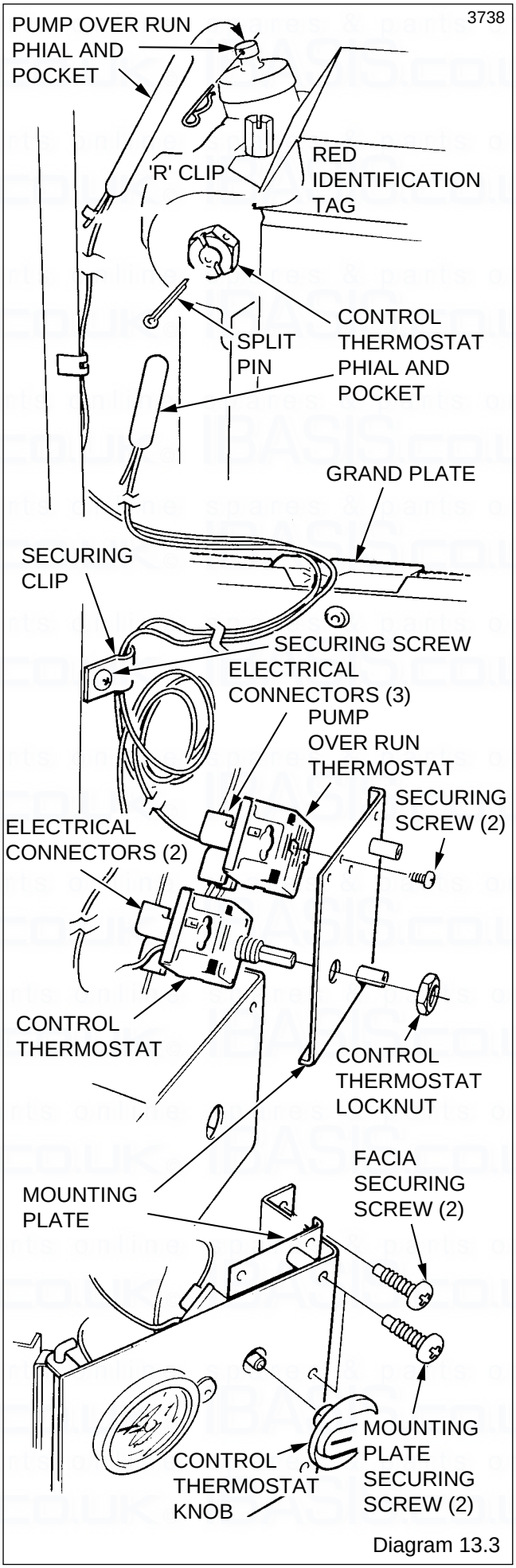

Diagram 13.3

Overheat Cutoff Device (diagram 13.4)
Pump Failure Cutoff Device (diagram 13.5)

Remove the electrical connections from the cutoff bodies.

Remove the capillaries from the securing clamps.

Remove the locknut securing the cutoffs to the bracket and withdraw the assembly, see diagram 13.4 or 13.5.

When refitting make sure the capillaries are covered with the heat sink compound, supplied.

13.7 Air Pressure Switch

Gain access as Section 13.5

Remove the air pressure tubes and electrical connections, release the screws, remove the switch, see diagram 13.6.

When fitting the replacement make sure that all the plastic tubes and electrical connections are made as shown in diagram 13.6.

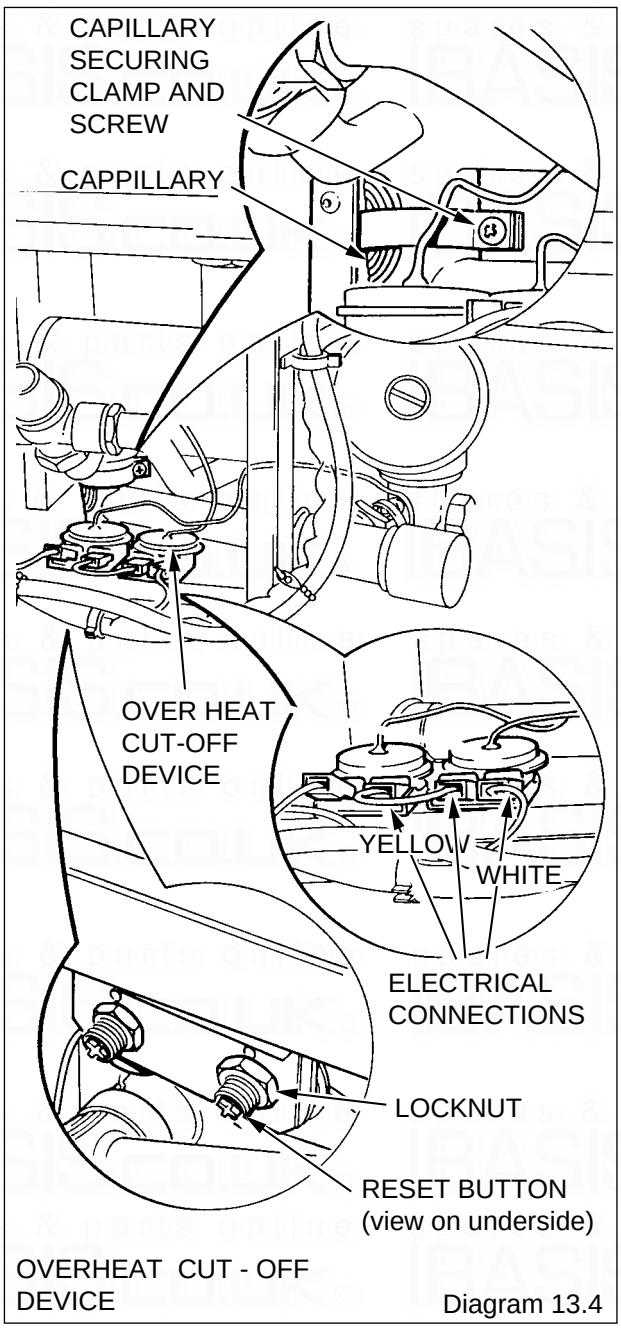

OVERHEAT CUT - OFF DEVICE

Diagram 13.4

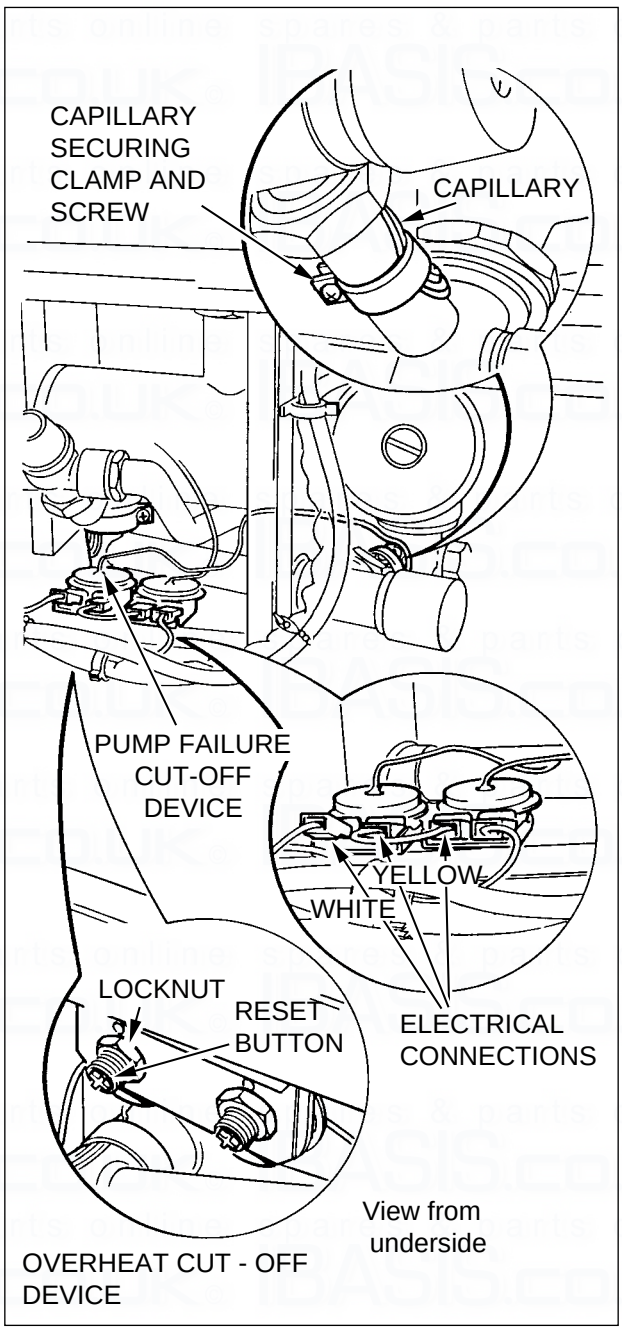

OVERHEAT CUT - OFF DEVICE

13.8 Multi-functional Control

Disconnect electrical plug from the multi-functional control, see diagram 13.7.

Disconnect the pilot pipe at the pilot burner, see diagram 13.7.

Disconnect the gas service cock union and undo the four screws at the outlet manifold, see diagram 13.7.

Transfer the half union of the gas service cock to the inlet of the replacement multi-functional control. Also transfer the pilot supply pipe. Use a little thread sealant on the external threads to ensure gas soundness.

Fit the new multi-functional control, take care not to damage the “O” ring, see diagram 13.7.

It will be necessary to purge the pipework and multi-functional control before relighting and check the gas pressure setting, refer to Commissioning Section.

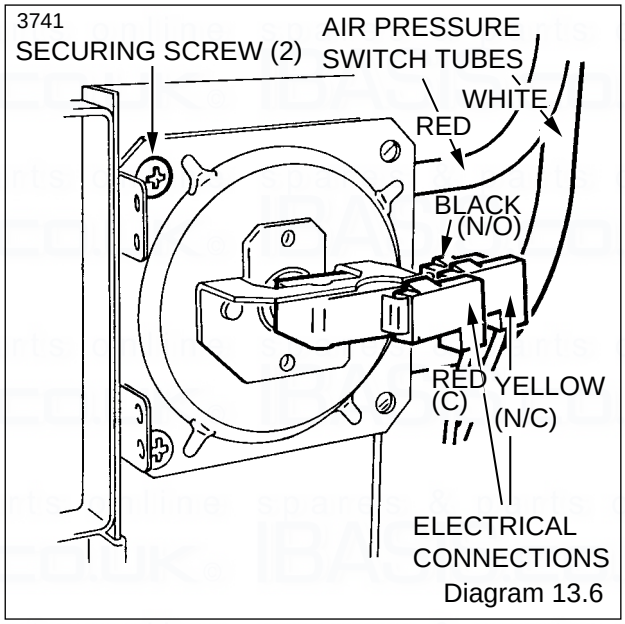

Diagram 13.6

13.9 Multi-functional Control - Solenoid

Disconnect the electrical plug remove the securing screw and then the solenoid assembly, see diagram 13.8.

13.10 Fan

Remove the electrical connections and disconnect the air tubes, see diagram 7.11.

Remove the fluehood/fan assembly securing screws and withdraw the assembly, see diagram 7.11.

Turn the flue hood over and release the four screws as shown in diagram 7.12.

Make sure that when fitting the replacement fan to the flue hood that it is the correct way round for connection to the flue, refer to diagram 7.11 and 7.13 and Section 7.7 or 7.8.

Ensure the earth connection is remade onto the new fan assembly.

The polarity of the other two connections is not important.

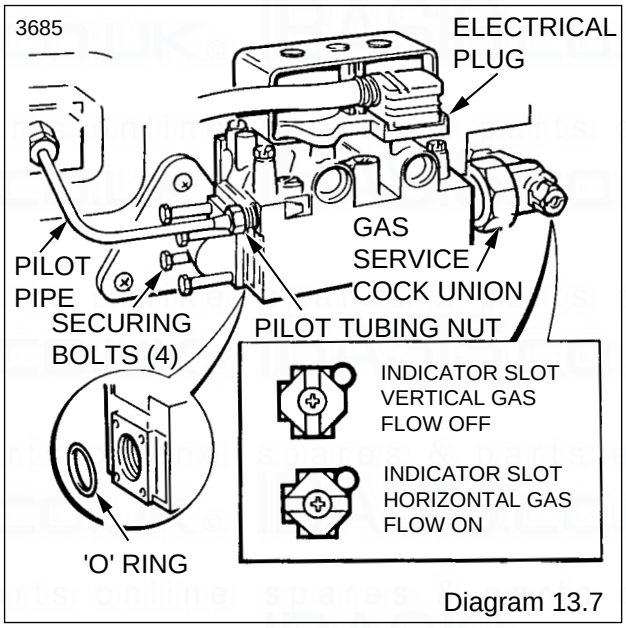

Diagram 13.7

13.11 Main Burner

Gain access as Section 11.2.

Remove the burner as Section 11.3.

13.12 Main Burner Injector

Gain access as Section 11.2.

Remove the injector as Section 11.4.

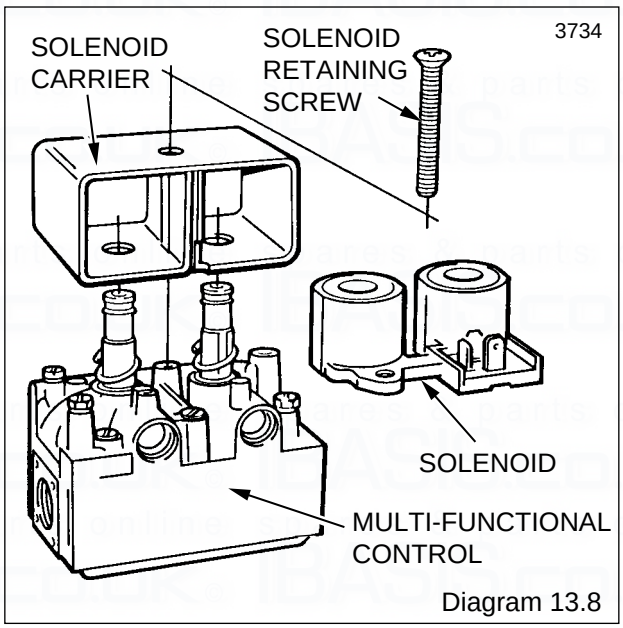

Diagram 13.8

13.13 Insulation

Gain access as Section 11.2.

Combustion Chamber/Heat Exchanger Front Cover

Remove the rear flueway cleaning plate and then the heat exchanger front cover, see diagram 11.3.

Remove the relevant insulation and fit the replacement part, make sure that it is fitted as shown in diagram 13.9.

Combustion Chamber Sides and Rear

Remove the insulation and fit the replacement parts make sure that they are fitted as shown in diagram 13.9.

13.14 Viewing Window

Remove the two screws and then the window, see diagram 13.10.

When replacing take care not to damage the gasket.

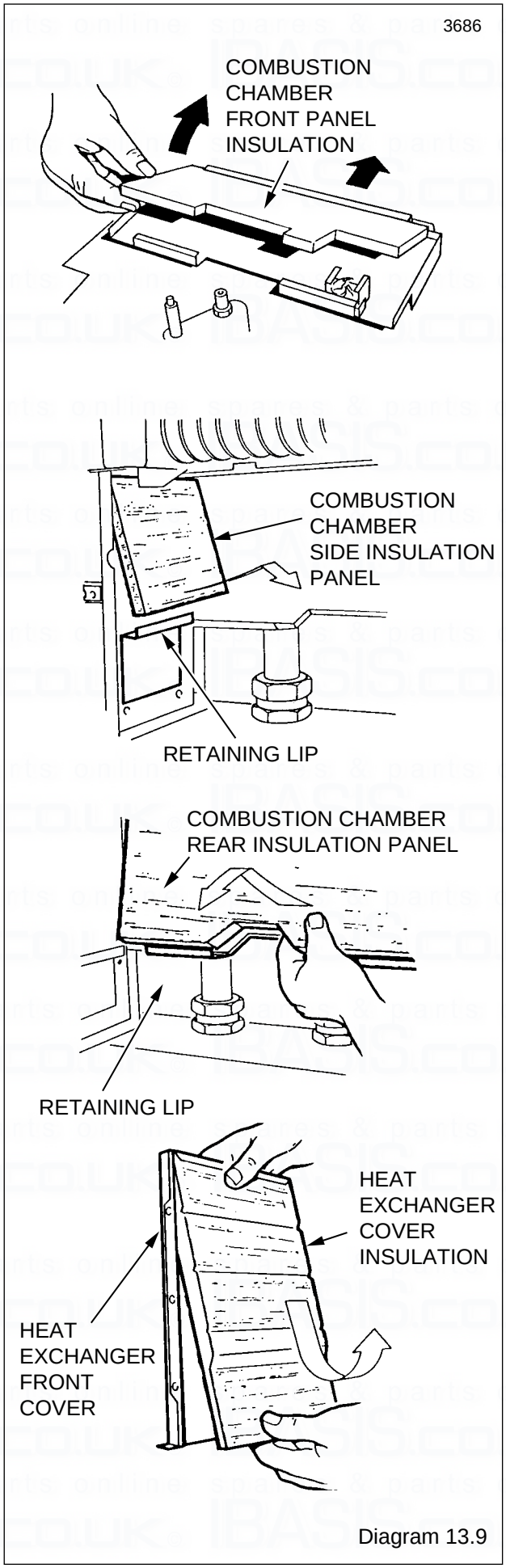

Diagram 13.9

13.15 Pressure Gauge

Release the pressure and drain the boiler as Section 13.2.

Gain access as Section 13.5.

Disconnect the pressure gauge connection from the safety valve, discard the washer, see diagram 13.11.

Remove the pressure gauge secured with the retaining spring tabs from the bracket, see diagram 13.11.

Carefully route the capillary as shown in diagram 13.11.

Fit the supplied washer under the pressure gauge connection when refitting to the safety valve.

13.16 Safety Valve

Gain access as Section 13.5.

Release the water pressure and drain the boiler as Section 13.2.

Disconnect the pressure gauge from the safety valve as Section 13.15.

Disconnect the union nuts to release the safety valve, see diagram 13.11.

When fitting use the new washer, supplied, for the pressure gauge connection.

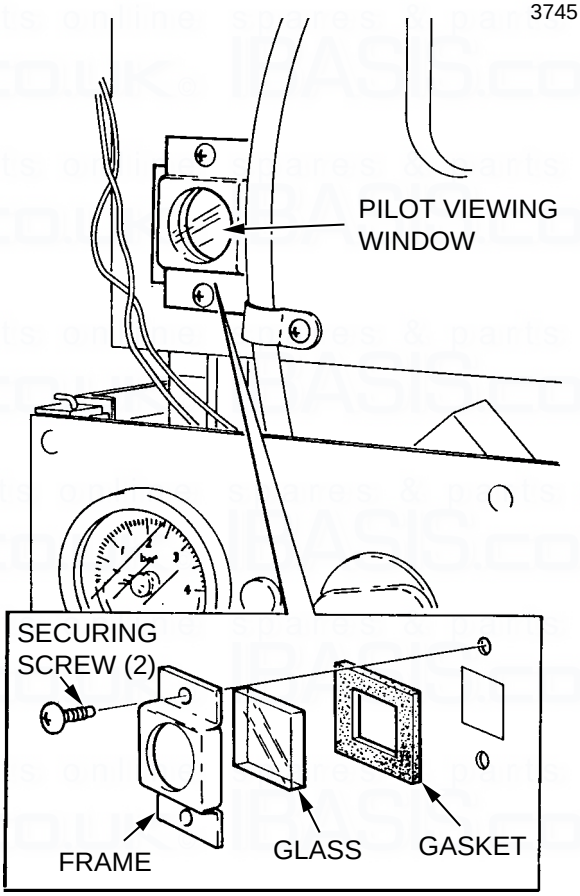

Diagram 13.10

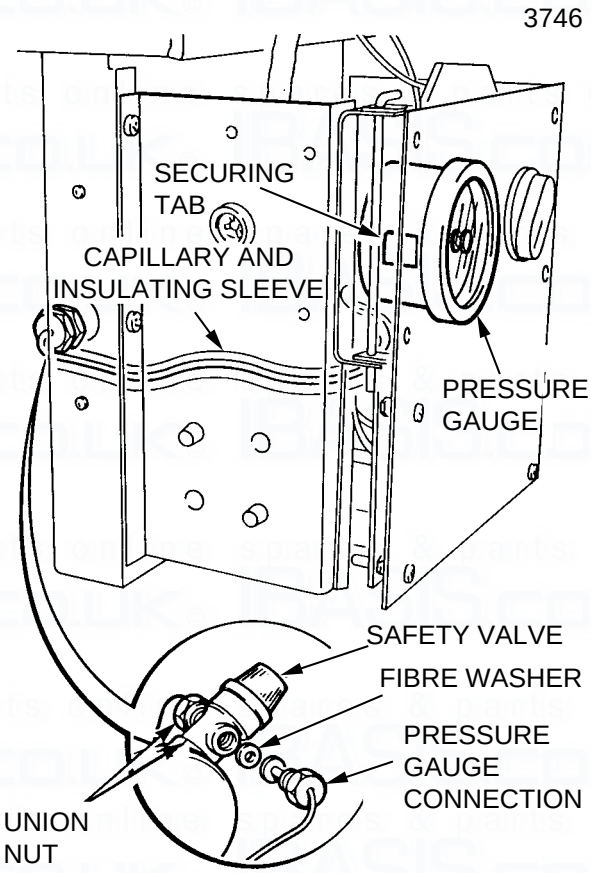

Diagram 13.11

13.17 Low Water Pressure Switch

Gain access as Section 13.5.

Release the water pressure and drain the boiler as Section 13.2.

Disconnect the electrical connectors at the micro-switch see diagram 13.12.

Remove the pressure switch.

Replace the “O” ring seal with the new seal provided.

Refer to diagram 13.12 when remaking the electrical connections.

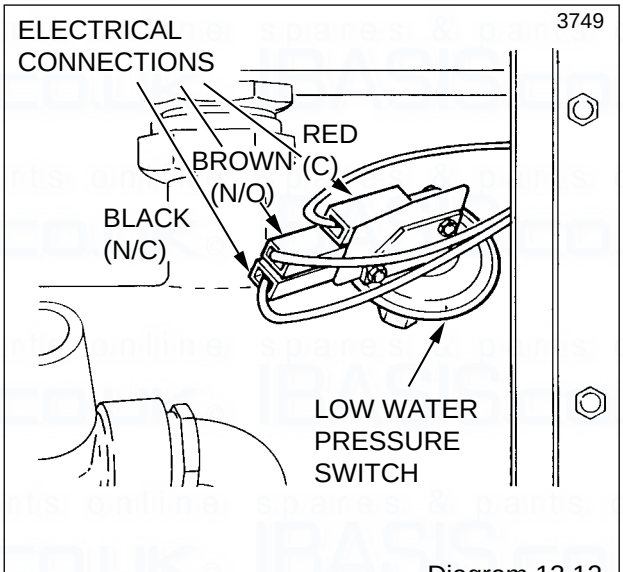

Diagram 13.12

13.18 Pump

Release the water pressure and drain as Section 13.2.

Disconnect the pump at the union connections, see diagram 13.13.

IMPORTANT Discard the sealing washers and fit the new ones supplied.

Remove wiring from pump by releasing the cover plate at the side, see diagram 13.13. When reconnecting make sure that the wires are correctly located, see diagram 13.13.

When fitting the replacement make sure that the flow direction arrow is pointing upwards.

Set the flow adjuster to position 3, see diagram 13.13.

Note. Should the pump fail to operate, and all is in order but the pump still does not operate, remove the end screw, turn the pump spindle to release any temporary seizure. DO NOT HIT THE SPINDLE.

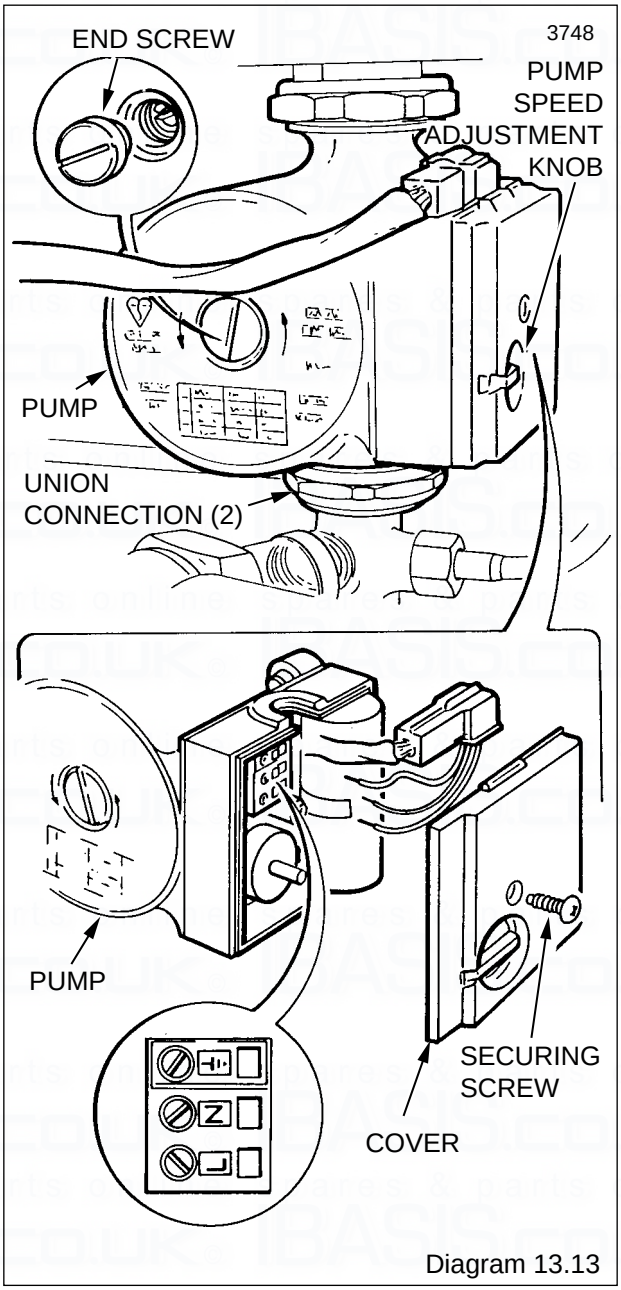

Diagram 13.13

13.19 Expansion Vessel

Renewal of the expansion vessel requires the removal of the boiler from the wall. As an alternative, in certain circumstances, a separate expansion vessel of the same specification may be connected as close as possible to the boiler, leaving the original in place.

Isolate the boiler from the gas and electrical supplies.

Release the water pressure and drain, as Section 13.2.

Remove the fan/flue hood assembly, refer to the appropriate paragraph of Section 7.3.

Disconnect the flue by reversing the instructions in Section 7.6.

Disconnect the water connection isolating valve unions, see diagram 8.1.

Disconnect the gas service cock, refer to diagram 7.8.

Disconnect the mains supply from the terminal strip, refer to diagram 7.9.

Remove the boiler from the mounting frame, secured with two screws at the top, see diagram 7.5. Pull the boiler from the isolating valves. Unhook the boiler at the top and withdraw forward.

Carefully lay the boiler down on its side to gain access to the expansion vessel, see diagram 13.14.

Disconnect the union nut connection.

Remove the expansion vessel, secured with two clamps.

Discard the sealing washers and use the new ones supplied.

Connect the union nut, when refitting the expansion vessel, before clamping it.

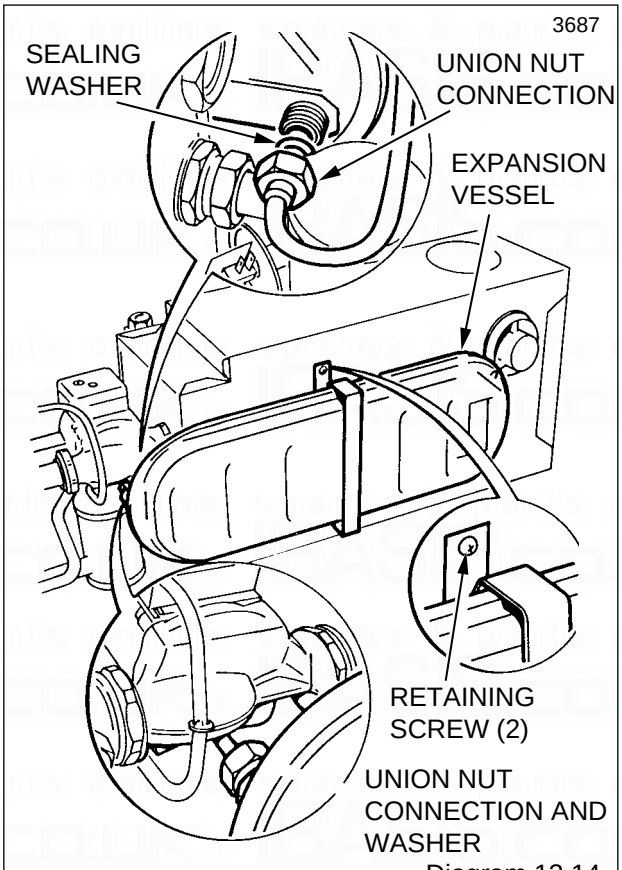

Diagram 13.14

13.20 Bypass Valve

Release the pressure and drain the boiler as Section 13.2.

Break the union connections, see diagram 13.15.

Note. The replacement valve, with washers, will be preset, it <u>must</u> <u>not</u> be adjusted.

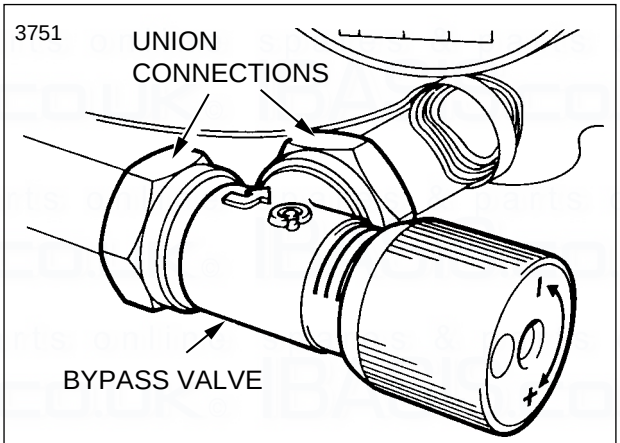

Diagram 13.15

13.21 Warning Light

Gain access as Section 13.5.

Disconnect the electrical connections, see diagram 13.16, squeeze the securing tabs and remove light from the fascia.

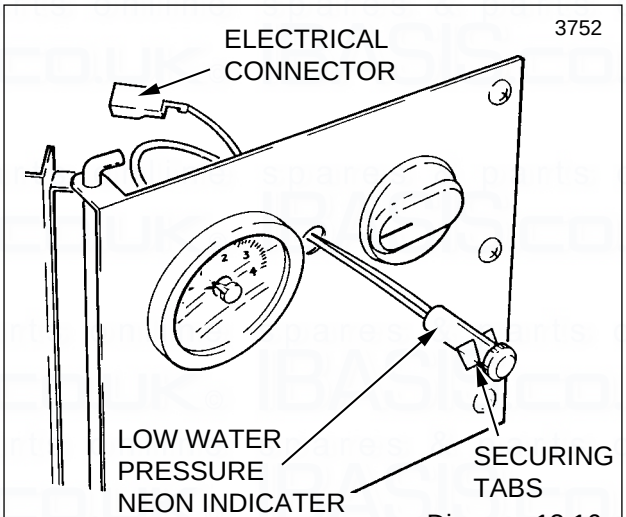

Diagram 13.16

13.22 Automatic Airvent

Release the water pressure as Section 13.2.

Remove the automatic air vent, see diagram 13.17.

Discard the sealing washer and use the new one supplied.

Slacken the vent cap on the air vent of the new item. This cap must not be retightened.

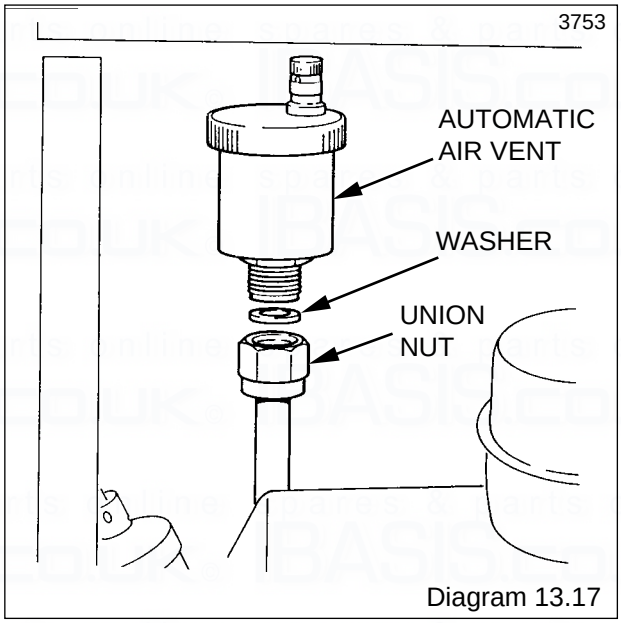

Diagram 13.17

14.1 Part Identification

The key number in diagram 14.1 and the first column of the list will help to identify the spare part.

14.2 Ordering

When ordering any spare part, please quote the part number and the description from the list together with the model name and serial number information from the data label.

If ordering from British Gas also quote the GC number of spare part, from the list.

Key No	Part No	Description	GC No
1	440178	Fan assembly - 30	313 540
1	440179	Fan assembly - 40	313 386
1	440073	Fan assembly - 50	397 987
2	203099	Main injector - 30	313 389
2	205700	Main injector - 40	313 387
2	203096	Main injector - 50	313 305
3	203428	Pilot burner	313 304
4	203509	Pilot injector	394 163
5	230211	Thermostat - control	378 514
6	800206	Thermostat knob	313 484
7	202546	Thermostat - pump overrun	378 518
8	230212	Cutoff device - overheat	397 981
9	230212	Cutoff device - pump failure	397 981
10	WW4610	Ignition lead	281 317
11	800340	Pressure gauge assembly	313 728
12	900817	Control board (PCB)	313 301
13	800165	Multi-functional control	313 300
14	202107	Fuse	312 087
15	208302	Sight glass	312 419
16	230000	Air pressure switch - 30	385 860
16	202135	Air pressure switch - 40/50	313 303
17	800149	Safety valve	397 677
18	800669	Bypass valve	
19	446555	Warning light	313 727
20	800150	Low water pressure switch	397 862
21	800153	Automatic air vent	313 285
22	800188	Electrode	386 116

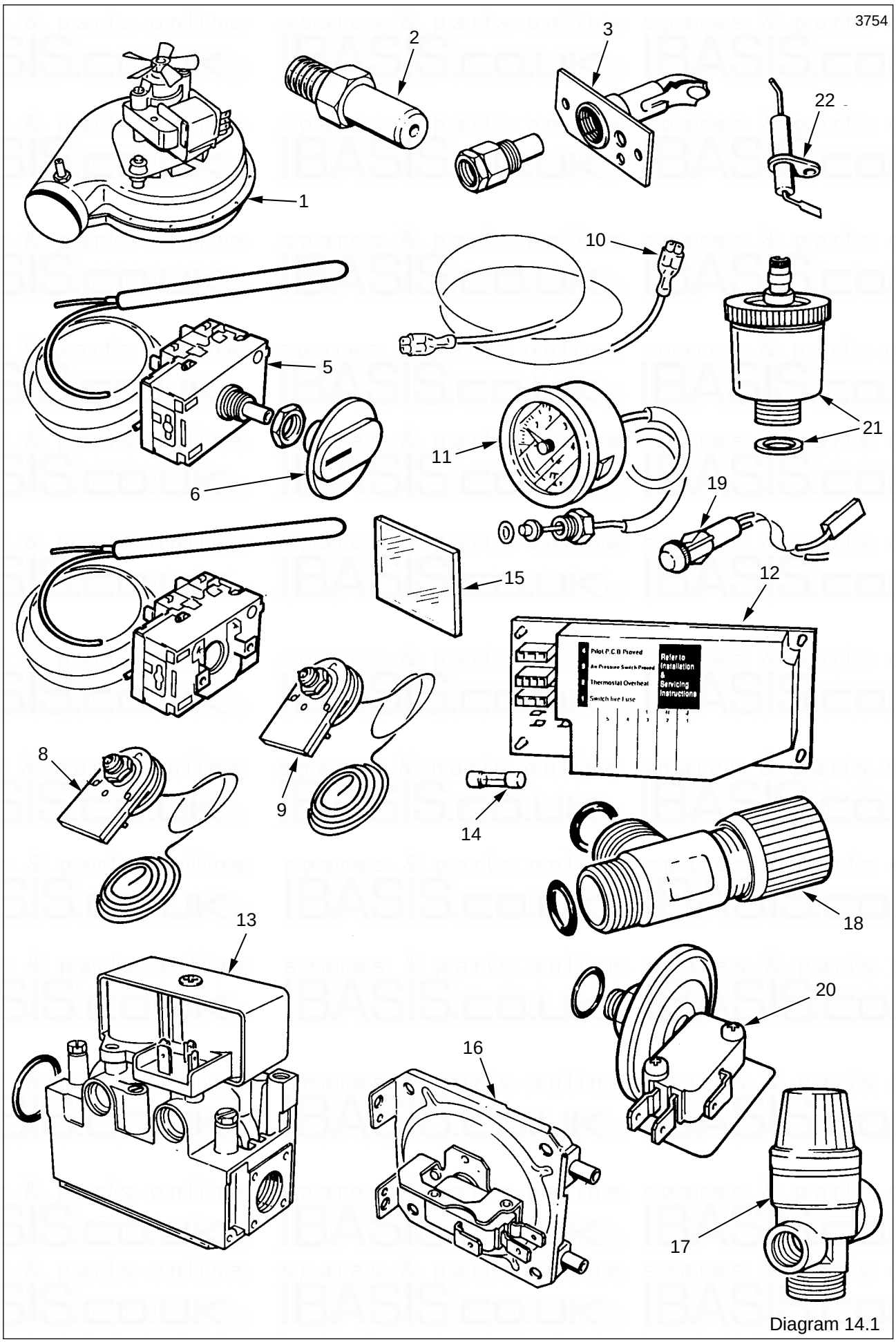
3754
1
2
3
22
10
5
21
11
6
19
15
12
Pilot P.C.B Proved
Air Pressure Switch Proved
Thermostat Overheat
Switch Live Fuse
Refer to Installation & Servicing Instructions
8
9
14
18
13
20
16
17

Diagram 14.1

Information for the Installer and Service Engineer.
Under Section 6 of The Health and Safety at Work Act 1974, we are required to provide information on substances hazardous to health.
The adhesives and sealants used in this appliance are cured and give no known hazard in this state.

INSULATION PADS/CERAMIC FIBRE, GLASSYARN, MINERAL WOOL
These can cause irritation to skin, eyes and the respiratory tract.
If you have a history of skin complaint you may be susceptible to irritation. High dust levels are usual only if the material is broken.
Normal handling should not cause discomfort, but follow normal good hygiene and wash your hands before eating, drinking or going to the lavatory.
If you do suffer irritation to the eyes or severe irritation to the skin seek medical attention.

THERMOSTATS
These contain very small amounts of dichlorotrifluoroethane in the sealed phial and capillary.
If broken, under normal circumstances the fluid does not cause a problem.
If there is irritation to the eyes or skin then seek medical attention.

CUT-OFF DEVICES
These contain a very small amount of ethylene glycol and methanol in the capillary.
If broken, under normal circumstances the fluid does not cause a problem, but in cases of skin or eye contact, wash with cold water.
If swallowed drink plenty of water and seek medical attention.

Because of our constant endeavour for improvement details may vary slightly from those in the instructions.