Glow-worm

Installation and Servicing

Ultimate 24h

G.C.No. 47-044-50

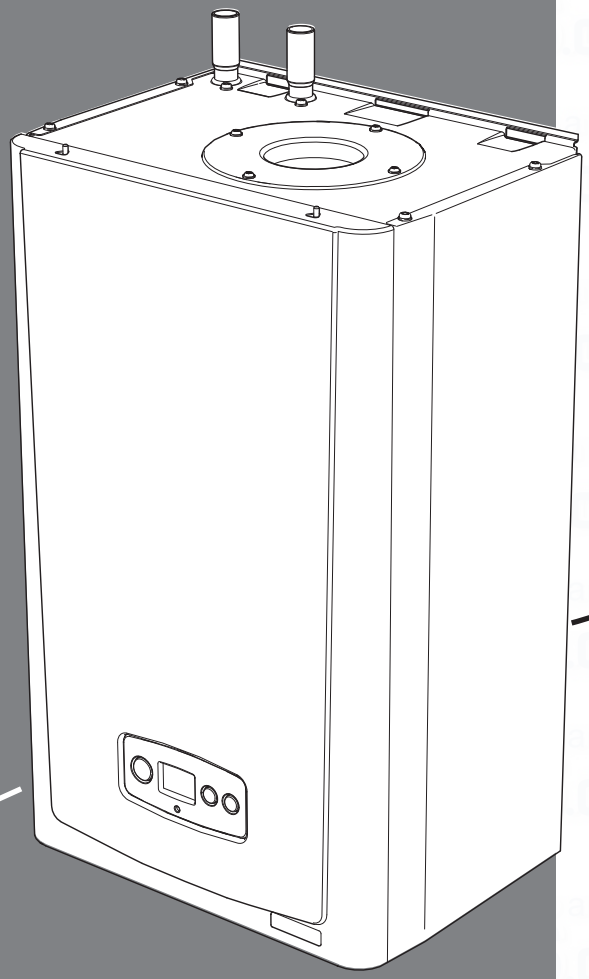

spares & parts online IBASIS.CO.UK

Guarantee Registration

Thank you for installing a new Glow-worm appliance in your home.
Glow-worm appliances are manufactured to
the very highest standard so we are pleased
to offer our customers a Comprehensive 5 years Guarantee.
We recommend you complete and return as soon as possible your guarantee registration card.
If your guarantee registration card is missing you can obtain a copy or record your registration by
telephoning the Glow-worm Customer Service number 01773 828100.

Customer Service:

01773 828100

Technical Helpline:

01773 828300

General and Sales enquiries:

Tel. 01773 824639

Fax: 01773 820569

To register your Glow-worm appliance call:

0800 0732142

Benchmark places responsibilities on both manufacturers and installers. The purpose is to ensure that customers are provided with the correct equipment for their needs, that it is installed, commissioned and serviced in accordance with the manufacturer's instructions by competent persons and that it meets the requirements of the appropriate Building Regulations. The Benchmark Checklist can be used to demonstrate compliance with Building Regulations and should be provided to the customer for future reference.

Installers are required to carry out installation, commissioning and servicing work in accordance with the Benchmark Code of Practice which is available from the Heating and Hotwater Industry Council who manage and promote the Scheme.

Visit www.centralheating.co.uk for more information.

benchmark COLLECTIVE MARK

THE MARK OF QUALITY FOR THE INSTALLATION, COMMISSIONING AND SERVICING OF DOMESTIC HEATING AND HOT WATER SYSTEMS

CE

spares & parts online IBASIS.CO.UK

TABLE OF CONTENTS

These instructions consist of, Installation, Servicing, Fault Finding, Replacement of Parts and Spares. The instructions are an integral part of the appliance and must, to comply with the current issue of the Gas Safety (Installation and Use) Regulations, be handed to the user on completion of the installation.

CONTENTS	DESCRIPTION	SECTION	PAGE
INTRODUCTION	Warnings		4
	Important Information		4
	Statutory Requirements		5
	Boiler Design		6
	Safety Devices		6
	Servicing, Maintenance and Spare Parts		6
INSTALLATION	Boiler Specification	1	7
	Boiler Dimensions and Hydraulic Schematic	2	8
	Boiler Location, Clearances and Ventilation	3	9
	Evacuation of Combustion Gas	4	10
	Water Systems	5	14
	Installation Preparation	6	18
	Boiler Fixing	7	19
	Gas/Water and Appliance Connection	8	20
	Condensate Connections	9	21
	Electrical Connection	10	23
	Commissioning	11	24
MAINTENANCE	Servicing	12	27
	Fault Finding	13	32
	Replacement of Parts	14	38
	Spare Parts	15	43
	Manual Handling	16	44
	Declaration of Conformity	17	45
	Commissioning Checklist		46
	Service Interval Record		47

WARNINGS

Gas Leak or Fault

Turn off the gas emergency control valve immediately. Eliminate all sources of ignition, i.e.smoking, blowlamps, hot air guns etc. Do not operate electrical lights or switches either on or off. Open all doors and windows,ventilate the area.

Sheet Metal Parts

This boiler contains metal parts (components) and care should be taken when handling and cleaning, with particular regard to edges.

Sealed Components

Under no circumstances must the User interfere with or adjust sealed parts.

Important Information

Gas Category

This boiler is for use only on G20 natural gas.

Gas Safety (Installation and Use) Regulations

In your own interests and that of safety, it is the Law that ALL gas appliances are installed by a **competent person** approved at the time by the Health and Safety Executive in accordance with the current issue of these regulations.

Control of Substances Hazardous to Health

Under Section 6 of The Health and Safety at Work Act 1974, we are required to provide information on substances hazardous to health.
The adhesives and sealants used in this appliance are cured and give no known hazard in this state.

Manual Handling

With regards to the “Manual Handling Operations, 1992 Regulations”, the appliance exceeds the recommended weight for a one man lift, refer to section 16 for more information.
The handling of the boiler may involve lifting, pushing and pulling, the use of a sack truck may be required.
The following handling techniques and precautions should be considered:
- Grip the boiler at its base
- Be physically capable
- Use safety clothing where appropriate, e.g. gloves, safety footwear.

Ensure safe lifting techniques are used
- Keep back straight.
- Avoid twisting at the waist.
- Avoid upper body/top heavy bending.
- Always grip using the palm of the hand.
- Use designated hand holds.
- Keep load as close to body as possible.
- Always use assistance if required.

Electrical Supply

The boiler MUST be earthed.
All system components shall be of an approved type and all wiring to current I.E.E. wiring regulations.
External wiring must be correctly earthed, polarised and in accordance with the relevant standards.
In GB, this is BS 7671.
In IE, this is the current edition of ETCI rules.
The boiler MUST be connected to a permanent 230V ac, 50Hz supply.
Connection of the whole electrical system of the boiler, including any heating controls, to the electrical supply MUST be through one common isolator and must be fused 3 Amp maximum.
Isolation should be by a double pole switched fused spur box, with a minimum gap of 3mm for both poles. The fused spur box should be readily accessible and preferably adjacent to the appliance. It should be identified as to its use.
Alternatively connection can be made through an unswitched shuttered socket and 3A fused 3-pin plug both to the current issue of BS 1363, provided they are not used in a room containing a bath or shower.
Wiring to the boiler must be PVC 85°C insulated cable, not less than 0.75mm2 (24/0.20mm).

Testing and Certification

This boiler is tested and certificated for safety and performance. It is, therefore, important that no alteration is made to the boiler, without permission, in writing, by Glow-worm.
Any alteration not approved by Glow-worm, could invalidate the certification, boiler warranty and may also infringe the current issue of the statutory requirements.

CE Mark

This boiler meets the requirements of Statutory Instrument, No. 3083 The Boiler (Efficiency) Regulations, and therefore is deemed to meet the requirements of Directive 92/42/EEC on the efficiency requirements for new hot water boilers fired with liquid or gaseous fuels.
Type test for purposes of Regulation 5 certified by: Notified body 0087.
Product/production certified by: Notified body 0086.
The CE mark on this appliance shows compliance with:
1. Directive 2009/142/EC on the approximation of the laws of the Member States relating to appliances burning gaseous fuels.
2. Directive 73/23/EEC on the harmonisation of the Laws of the Member States relating to electrical equipment designed for use within certain voltage limits.
3. Directive 89/336/EEC on the approximation of the Laws of the Member States relating to electromagnetic compatibility.

IMPORTANT

Where no British Standards exists, materials and equipment should be fit for their purpose and of suitable quality and workmanship.
The installation of this boiler must be carried out by a **competent person** approved at the time by the Health and Safety Executive in accordance the rules in force in the countries of destination.
Manufacturer's instructions must not be taken as overriding statutory requirements.

Statutory Requirements

In GB, the installation of the boiler must comply with the requirements of the current issue of BS6798 and be carried out by a **competent person**, approved at the time by the Health and Safety Executive, as described in the following regulations:
The manufacturer's instructions supplied.
The Gas Safety (Installation and Use) Regulations.
The appropriate Buildings Regulations either The Building Regulations, The Building Regulations (Scotland),The Building Regulations (Northern Ireland).
The Water Supply (water fittings) Regulations 1999 and water byelaws 2000, Scotland.
The Health and Safety at Work Act, Control of Substances Hazardous to Health (COSHH).
The Current I.E.E. Wiring Regulations.
Where no specific instructions are given, reference should be made to the relevant British Standard Code of Practice.
In IE, the installation must be carried out by a **competent person** approved at the time by the Health and Safety Executive and installed in accordance with the current edition of I.S.813 "Domestic Gas Installations", the current Building Regulations and reference should be made to the current ETCI rules for Electrical Installation.
GB: the following Codes of Practice apply:
BS4814, BS6798, BS5440 Part 1 and 2, BS5546 Part 1, BS5449, BS6891, BS6700, BS7074 Part 1 and 2, BS7593, BS7671.
IE: I.S.813, BS5546, BS 5449, BS 7074, BS 7593.
NOTE: For further information, see the current issue of the Building Regulations, approved document L1 (in the UK) and the following current issues of:
1) Central heating system specification (CheSS)
and
2) Controls for domestic central heating system and hot water. BRECSU.

Gas Supply

The gas installation must be in accordance with the relevant standards.
In GB, this is BS6891.
In IE, this is the current edition of I.S.813 "Domestic Gas Installations".
The supply from the governed meter must be of adequate size to provide a steady inlet working pressure of 20mbar (8in wg) at the boiler.
On completion, test the gas installation for tightness using the pressure drop method and suitable leak detection fluid, purge in accordance with the above standard.

Domestic Hot Water

All domestic hot water circuits, connections, fittings must be in accordance with the relevant standards and water supply regulations.
GB: Guidance G17 to G24 and recommendation R17 to R24 of the Water Regulations Guide.
IE: The current edition of I.S.813 "Domestic Gas Installations".

Heating System

In GB, it is necessary to comply with the Water Supply (Water Fittings) Regulations 1999 (for Scotland, the Water Byelaws 2000, Scotland).
To comply with the Water regulations your attention is drawn to: The Water Regulations guide published by the Water Regulations Advisory Service (WRAS) gives full details of the requirements.
In IE, the requirements given in the current edition of I.S.813 "Domestic Gas Installations" and the current Building Regulations must be followed.

Boiler Design

Boiler Design

These boilers are designed to provide central heating from a fully pumped open vented or sealed water system and domestic hot water using a fully indirect cylinder.
Once the controls are set the boiler operates automatically.

Sealed Systems

The boiler is provided for connection to an open vented central heating system. An integral kit is available to convert the appliance to a sealed system boiler.

Condensate Drain

A plastic drain pipe must be fitted to allow discharge of condensate to a drain.
Condensate should, if possible, be discharged into the internal household draining system. If this is not practical, discharge can be made externally into the household drainage system or a purpose designed soak away, see section 8 for more details.

Pluming from flue terminal

Like all condensing boilers this appliance will produce a plume of condensation from the flue terminal in cool weather. This is due to the high efficiency and hence low flue gas temperature of the boiler. This is normal and not an indication of a fault.

Safety Devices

Electrical Supply Failure

The boiler will not work without an electrical supply.
Normal operation of the boiler should resume when the electrical supply is restored.
Reset any external controls, to resume normal operation of the central heating.
If the boiler does not resume normal operation press the reset button. If the boiler does not resume normal operation after this call your Installation/Servicing company or Glow-worm service.

Overheating Safety

The boiler software is designed to recognise the potential for an overheat lockout and will shutdown before this happens. To restart the boiler, press the reset button on the controls fascia.
If the boiler fails to resume normal operation and all external controls are calling for heat, then call your Installation/Servicing company or Glow-worm service.

Frost protection

The appliance has a built in frost protection device that protects the boiler from freezing. With the gas and electric supplies ON and irrespective of any room thermostat setting, the frost protection device will operate the pump when the temperature of the boiler water falls below 8ºC.
A timer is used so that the temperature can be checked periodically. After 10 minutes the pump will be stopped if the temperature is higher than 10ºC or has already reached 35ºC.
The burner will activate if the boiler temperature does not reach 10ºC after 30 minutes or at any time if the temperature drops to 5ºC.
The burner will switch off when the temperature reaches 35ºC.

Condensate Drain Blockage

As a safety feature the boiler will stop working if the condensate drain becomes blocked. During freezing conditions this may be due to the forming of ice in the condense drain external to the house. Release an ice blockage by the use of warm cloths on the pipe. The boiler should then restart.

Servicing, Maintenance and Spare Parts

Servicing and Maintenance

To ensure the continued efficient and safe operation of the boiler it is recommended that it is checked and serviced as necessary at regular intervals. The frequency of servicing will depend upon the particular installation conditions and usage.
If this appliance is installed in a rented property there is a duty of care imposed on the owner of the property by the current issue of the Gas Safety (Installation and Use) Regulations, Section 35.
Servicing/maintenance should be carried out by a **competent person** approved at the time by the Health and Safety Executive in accordance with the rules in force in the countries of destination.
To obtain service, please call your installer or Glow-worm's own service organisation using the telephone number on the inside front cover of this literature.
After servicing, complete the relevant Service Interval Record section of the Benchmark Checklist located on the inside back pages of these instructions.

Spare Parts

Remember, when replacing a part on this appliance, use only spare parts that you can be assured conform to the safety and performance specification that we require. Do not use reconditioned or copy parts that have not been clearly authorised by Glow-worm.
If a part is required contact Glow-worm's own service organisation using the telephone number on the inside front cover of this booklet.
Please quote the name of the appliance, this infomation will be on the name badge on the front of the appliance.
If in doubt seek advice from the local gas company or Glow-worm's own service organisation using the telephone number on the inside front cover of this booklet.

1 Boiler Specification

BOILER SPECIFICATION	
Lift weight	25kg (55lb)
Total weight (installed)	28kg (62lb)
Gas connection Ø O.D.	15mm. copper
Heating Flow and Return connection Ø O.D.	22mm. copper
Condensate connection Ø I.D.	21.5mm. plastic
Electrical supply	230V~50Hz
Electrical rating	60W fused 3A
IP clasification	IPX4D
Internal fuse rating on main PCB	2A
Gas supply (governed meter only) and cat.	G20 natural gas
Gas Category	I_{2H} natural gas
Inlet gas working pressure	20mbar
Burner % CO_2 case on	9.3 nominal
Burner % CO_2 case off	9.3 nominal

Variable rating -

Approximate gas rates at part load

kW	m3/hr	ft3/hr
24	2.5	88.6
23	2.4	84.7
22	2.3	81.2
21	2.2	77.3
20	2.1	73.8
19	2.0	69.9
18	1.9	66.4
17	1.8	62.9
16	1.7	58.9
15	1.6	55.4
14	1.5	51.5
13	1.4	48.0
12	1.3	44.1
11	1.2	40.6
10	1.0	36.7
-	-	-

		24h
Approximate max. gas rate after 10 mins. from cold	m^3/h	2.58
	ft^3/h	90.9
Approximate min. gas rate after 10 mins. from cold	m^3/h	0.99
	ft^3/h	35.1
Heat input NETT Q = kW	max.	24.4
	min.	9.4
Heat output P = kW	max.	24
	min.	9.3
SEDBUK rating %	2005	90.3
SEDBUK rating %	2009	88.4
Flue type (all models)	C_{13}, C_{33}, C_{43}	
NOx (all models)	Class 5	

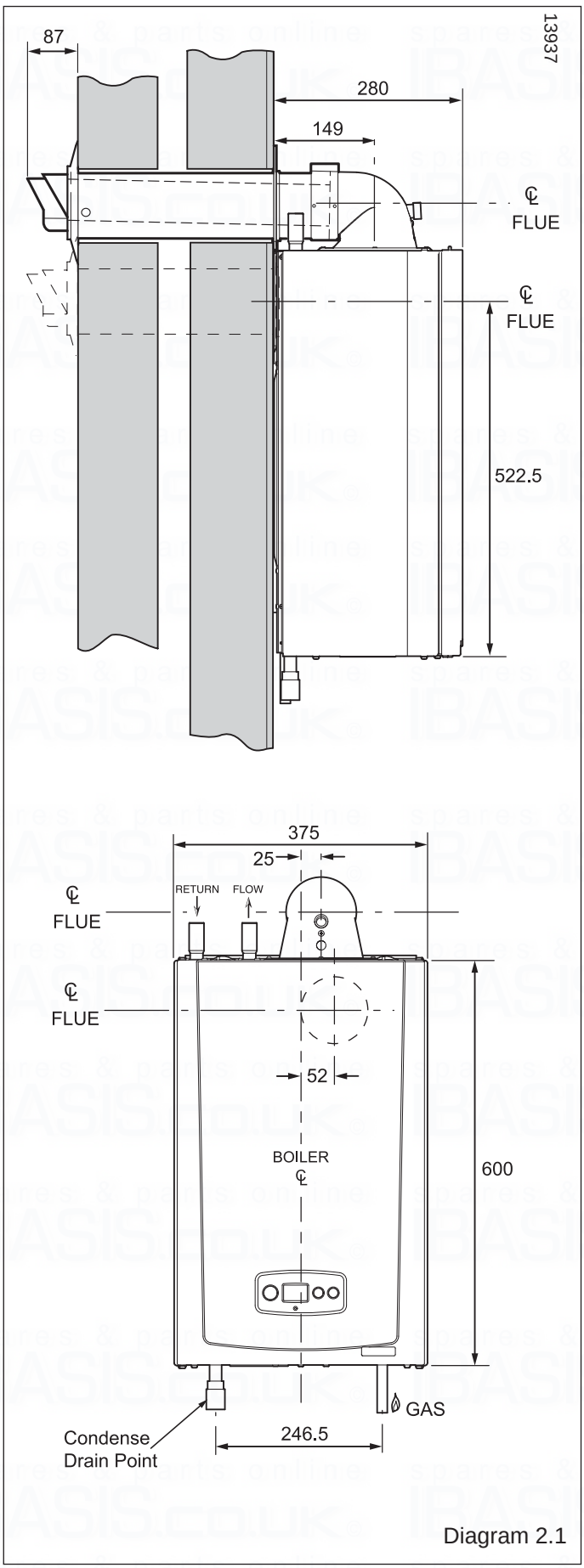

Diagram 2.1

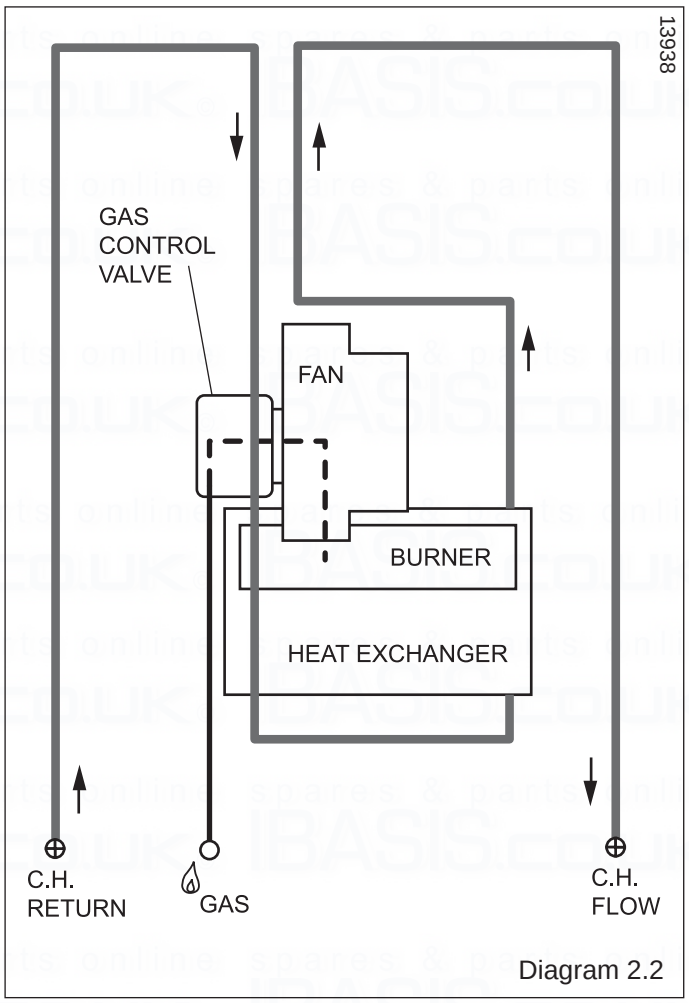

Diagram 2.2

2 Boiler Dimensions and Hydraulic Schematic

All dimensions are given in millimetres (except as noted).

The general arrangment of the boiler is shown in diagram 2.1. and the hydraulic and gas schematic, diagram 2.2.

The data label is positioned on the front of the inner casing panel.

3 Boiler Location, Clearances and Ventilation

3.1 Location

This boiler is not suitable for outdoor installation.
This boiler may be installed in any room, although particular attention is drawn to the installation of a boiler in a room containing a bath or shower where reference must be made to the relevant requirements.
This boiler is suitable for installation in bathroom zones 2 and 3.
In GB this is the current I.E.E. WIRING REGULATIONS and BUILDING REGULATIONS.
In IE reference should be made to the current edition of I.S.813 “Domestic Gas Installations” and the current ETCI rules.

3.2 Clearances

The boiler should be positioned so that at least the minimum operational and servicing clearances are provided, see diagram 3.1.
Increased clearances would be beneficial for the installation.
Where external access is not practicable, for flue installations consideration should be given for the space required to insert the flue internally, which may necessitate the clearance to be greater than those specified in diagram 3.1.

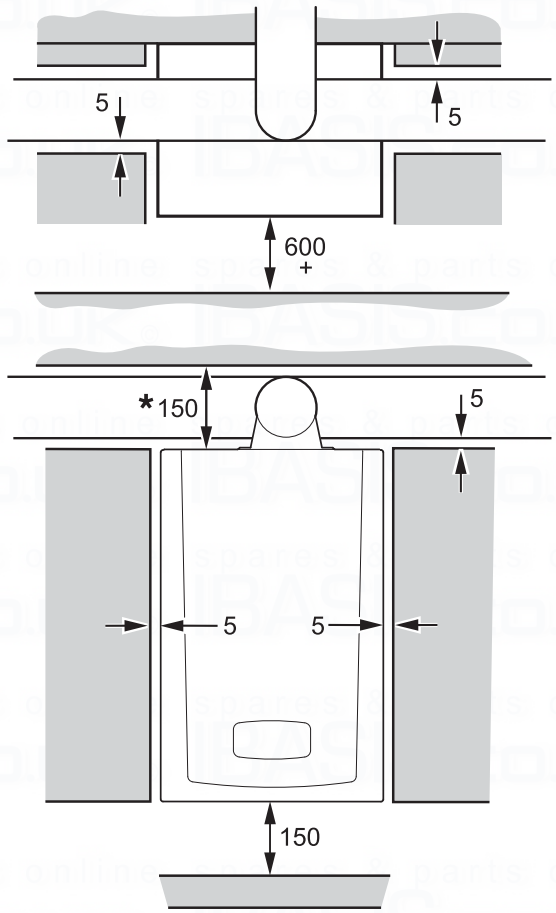

+ A removable compartment door can be placed a minimum of 5mm in front of the appliance.

* This can be reduced to 20mm for a direct rear flue

Diagram 3.1

3.3 Timber Frame Buildings

If the boiler is to be installed in a timber frame building it should be fitted in accordance with the Institute of Gas Engineers document IGE/UP/7/1998. If in doubt seek advice from the local gas undertaking or Glow-worm.

3.4 Combustible Material

The boiler and flue are suitable for installation onto and through combustible materials provided that:-

1) Minimum 5mm clearance is maintained around the circumference of the flue (air intake).

2) The combustible surface and fixings are suitable for supporting the load.

3) The minimum clearances from the boiler case are maintained.

3.5 Room Ventilation

The boiler is room sealed so a permanent air vent is not required.

3.6 Cupboard or Compartment Ventilation

Due to the high efficiency and hence low casing temperature of this boiler, cupboard or compartment ventilation is not necessary. Leave existing air vents.

4 Evacuation of Combustion Gas

4.1 Regulation

Only flue accessories supplied by Glow-worm must be used.

Different flue outlet configurations can be carried out.

- Consult your supplier for more information about the other possibilities and associated accessories.

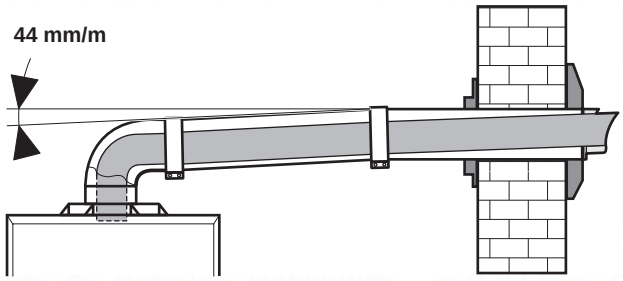

- Standard flue terminal kits have an in-built fall back to the boiler to drain the condensate. These should be fitted level between the appliance and the termination position. All other extended flues must have a fall of at least 44mm/m

The maximum length of the flue outlet is defined according to its type (for example C13).

- Whatever the kind of flue system chosen, observe the minimum distances indicated in the chart below to position the flue terminals.
- To install the flue, refer to the separate flue instruction supplied with your appliance.
- Explain these requirements to the user of the appliance.

If necessary, you must install terminal protection.

Caution! The connection between the flue elbow and the flue outlet must be sealed.

In GB the minimum acceptable siting dimensions for the terminal from obstructions, other terminals and ventilation openings are shown in diagram overleaf.

In IE the minimum distances for flue terminal positioning must be those detailed in I.S.813 “Domestic Gas Installations”.

The terminal must be exposed to the external air, allowing free passage of air across it at all times.

Being a condensing boiler some pluming may occur from the flue outlet. This should be taken into consideration when selecting the position for the terminal.

Carports or similar extensions of a roof only, or a roof and one wall, require special consideration with respect to any openings, doors, vents or windows under the roof. Care is required to protect the roof if made of plastic sheeting. If the carport comprises of a roof and two or more walls, seek advice from the local gas supply company before installing the boiler.

If the flue terminal is positioned near a light source insects may enter the flue system. Where safe and practical to do so advise the homeowner to check the flue outlet and clear visible insects from the terminal end.

H* and J* See diagram 4.2. These dimensions comply with the building regulations, but they may need to be increased to avoid wall staining and nuisance from pluming depending on site conditions.

Terminal Guard

A terminal guard is required if persons could come into contact with the terminal or the terminal could be subject to damage.
If a terminal guard is required, it must be positioned to provide minimum of 50mm clearance from any part of the terminal and be central over the terminal.
The guard should be similar to that shown in diagram 4.1.

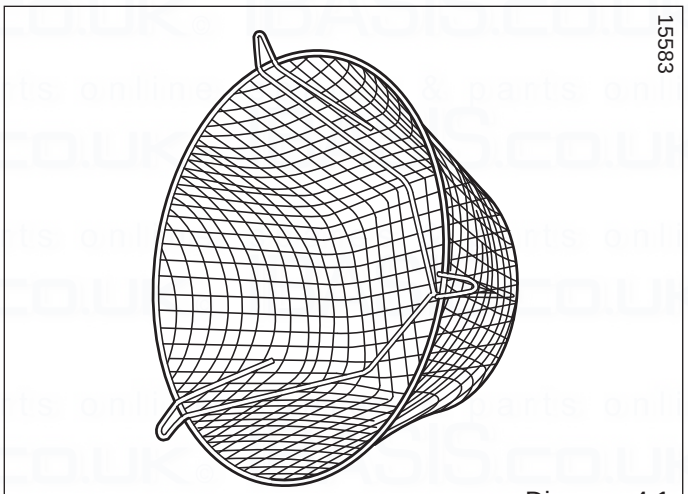

Diagram 4.1

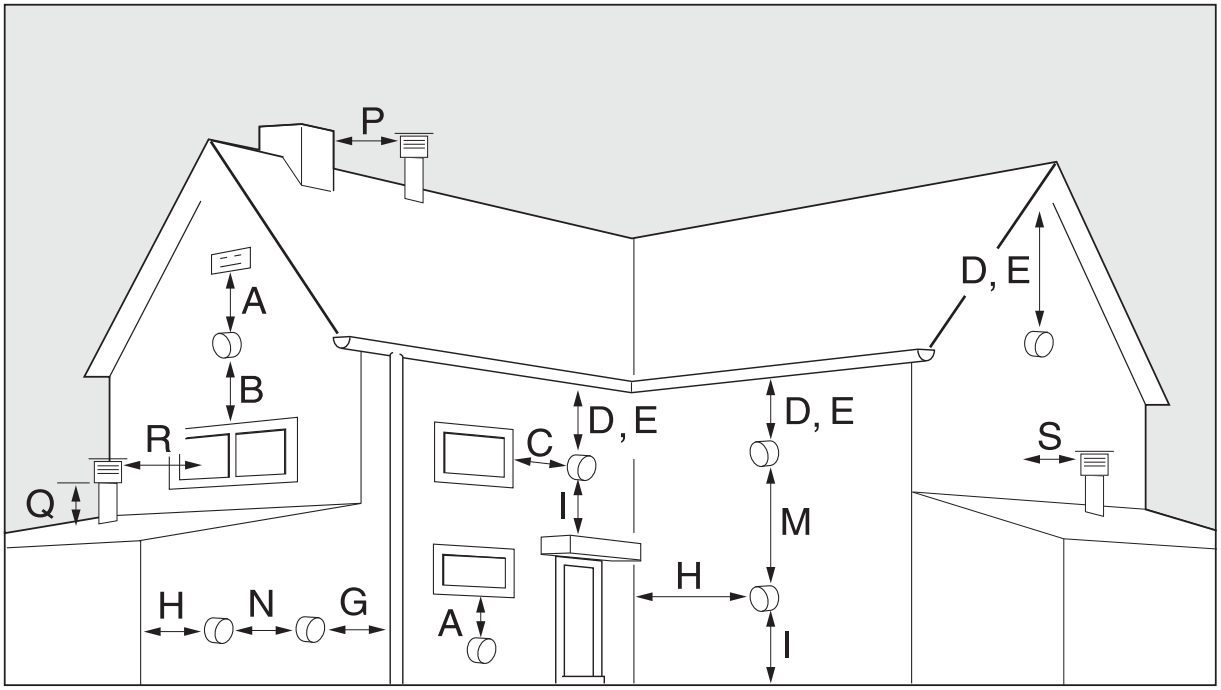

UNDER CAR PORT etc.

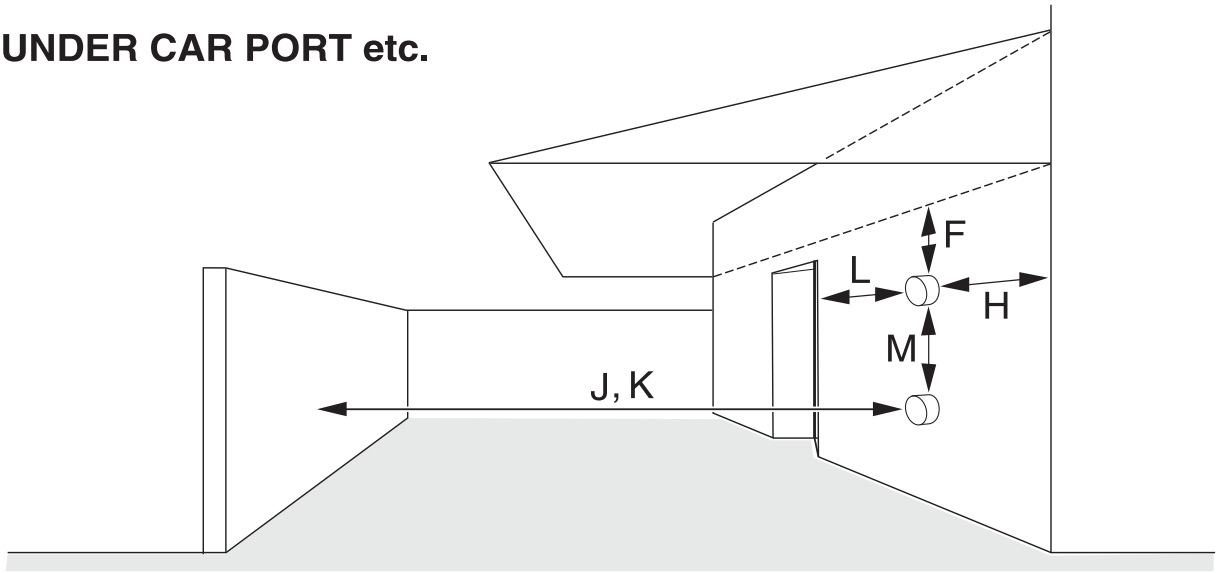

Diagram 4.2

Position	Position of the flue terminal	mm
Horizontal flues		
A	directly below an opening, air brick, opening windows	300
B	above an opening, air brick, opening windows	300
C	horizontally to an opening, air brick, opening windows	300
D	below gutter, drain/soil pipe	25
E	below eaves	25(1)
F	below a balcony or car port	25
G	from vertical drain pipes and soil pipes	25
H	from internal/external corners	25
H(2)	to a boundary alongside the terminal	300
I	above adjacent ground or balcony level	300
J(2)	from surface or a boundary facing the terminal	600

Position	Position of the flue terminal	mm
L	from opening (door/window) in car port into dwelling	1200
M	vertical from a terminal	1500
N	horizontally from a terminal	300
Vertical flues		
P	from another terminal	600
Q	above roof level	300
R	from adjacent opening window	1000
S	from adjacent wall to flue	300

(1) There should be no ventilation/opening in the eaves within 300mm distance of the terminal.

(2) These dimensions comply with the building regulations, but they may need to be increased to avoid wall staining and nuisance from pluming depending on site conditions.

4.2 Flue configuration description

4.2.1 Horizontal concentric flue Ø 60/100 mm or Ø 80/125 mm (C13 type installation)

If the terminal is at less than 1.80 m from the ground, you must install a terminal protection kit.

Ø 60/100 mm

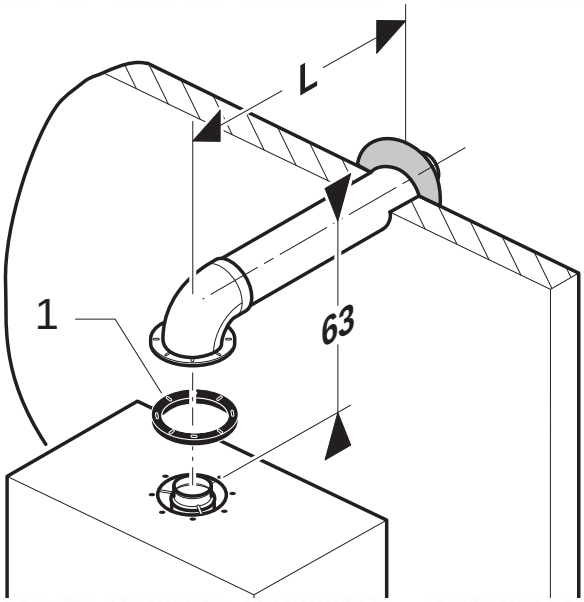

Key
1 Gasket (fitted)

Ø 80/125 mm

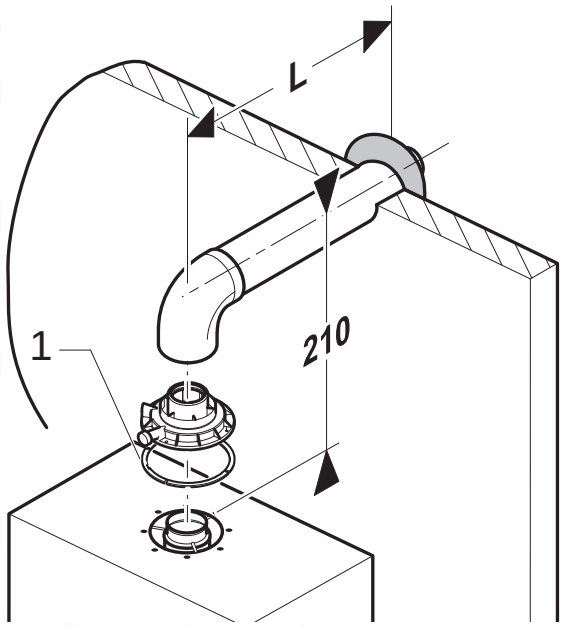

Key
1 Gasket (fitted)

Type	Max length
Ø 60/100	8 m
Ø 80/125	20 m

Each time an additional 90° bend is necessary (or 2 at 45°), the length (L) must be reduced by 1 m.

When using the Plume Management Kit, the maximum lengths flue pipe A and B (60/100mm) are:

A (m)	0.5	1.0	1.5	2.0	2.5	3.0	3.5	4.0	4.5	5.0	5.5
B (m)	5.5	5.0	4.5	4.0	3.5	3.0	2.5	2.0	1.5	1.0	0.5

Refer to the Plume Management Kit installation manual.

4.2.2 Telescopic direct rear flue Ø 60/100 mm

Ø 60/100 mm

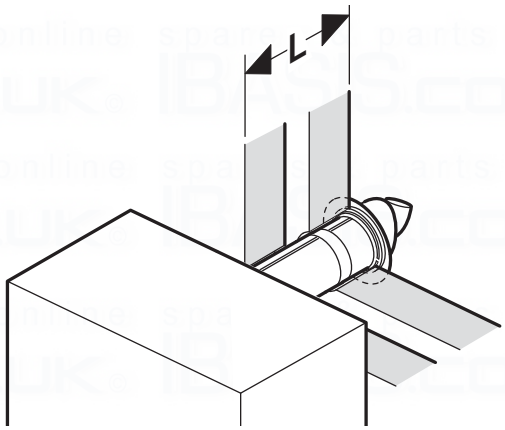

Type	Max length
Ø 60/100	512 mm

4.2.3 Vertical concentric flue Ø 60/100 mm or Ø 80/125 mm (C33 type installation)

If the terminal is at less than 1.80 m from the ground, you must install a terminal protection kit.

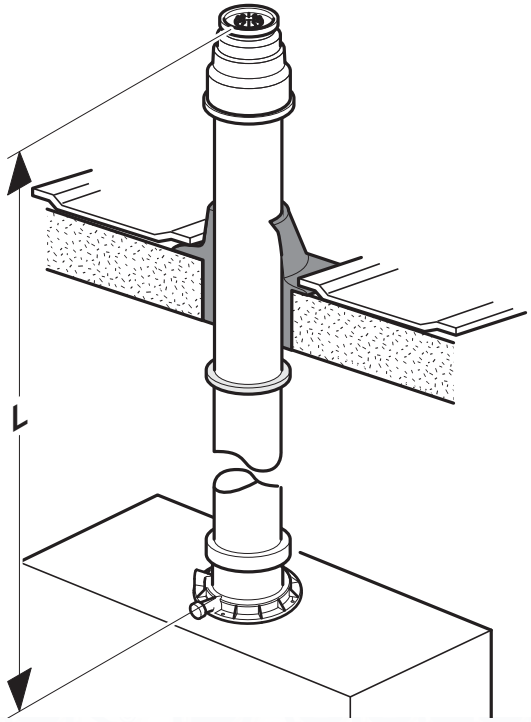

Type	Max length (L)
Ø 60/100	8 m
Ø 80/125	20 m

Each time an additional 90° bend is necessary (or 2 at 45°), the length (L) must be reduced by 1 m.

4.2.4 Multiple boiler chimney flue Ø 60/100 mm (C43 type installation)

The flue connecting from the appliance to the flue system must be supplied from the manufacturer of the boiler.

C43 flue systems must not be a 'pressurised system' but act under natural draught principles

C43 type flue systems must have their own condensate drain fitted and not allow condensate to mix into other appliances

Multiple Boiler Chimney Flue Length

The flue length must be calculated and installed according to the relevant standards EN 13384-1 and 2 (C43 flue systems only) with reference to the table below and the manufacturers instructions supplied.
The appliance maximum flue length must be included when calculating the overall design of the flue system.

NOTE: The horizontal flue terminal must be removed.

	Ultimate 24h
Exhaust mass rate (g/s)	
At Min Thermal Load (40C°/30°C)	4.30
At Max Thermal Load (80C°/60°C)	11.17
Exhaust temperature (ºC)	
At Min Thermal Load (40C°/30°C)	33.2
At Max Thermal Load (80C°/60°C)	73.3

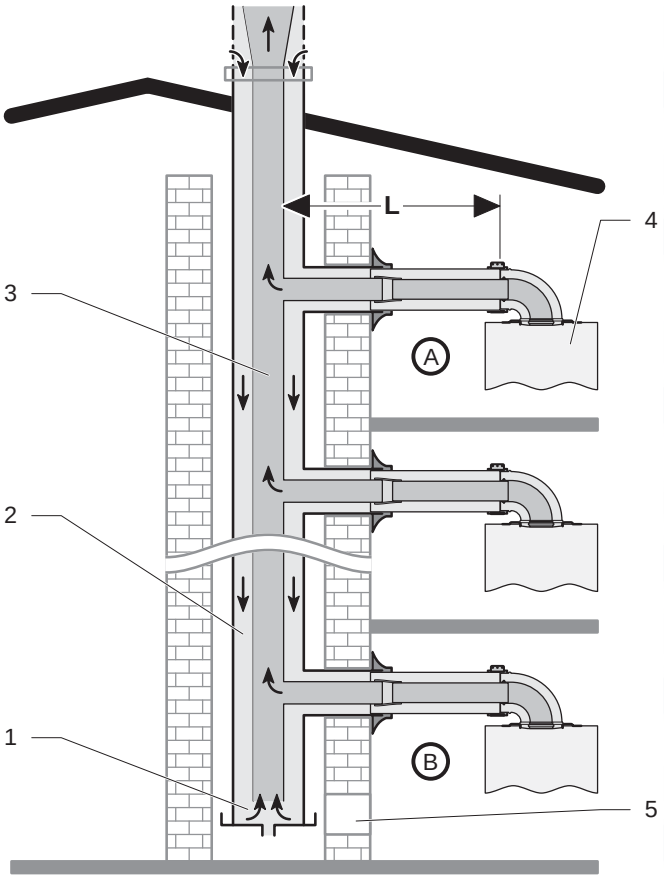

Key
1 Pressure balancing system
2 Air-inlet pipe
3 Collector pipe
4 Boiler
5 Inspection hatch
A Final storey
B Ground floor

Type	Max length (L)
Ø 60/100	8 m

Each time an additional 90° bend is necessary (or 2 at 45°), the length (L) must be reduced by 1 m.

5 Water Systems - General

5.1 General

This boiler is designed to provide central heating from a fully pumped open vented or sealed water system and domestic hot water using a fully indirect vented or unvented cylinder.

5.2 Draining Points

Draining taps must be provided at all low points of the system, which will allow the entire system to be drained.
Draining taps shall be to the current issue of BS2879.

5.3 Pump

The pump should be fitted on the flow pipe from the boiler and have isolating valves each side.
A variable duty pump should be set to give a temperature difference of no greater than 20°C between the flow and return, with the thermostat set at “MAX”, which is about 80°C, to give a flow rate as given in the table.
See chart for pressure loss of the boiler, diagram 5.1.
High resistance microbore systems may require a higher duty pump.

5.4 Flow Rate

If it is necessary to alter the flow rate, the system can be fitted with a lockable balancing valve in the main flow or return pipes shown in diagram 5.4. The flow rate through the boiler must not be allowed to fall below that given in diagram 5.2.

5.5 Bypass

A system bypass is required and should be fitted at least 1.5 metres away from the boiler, refer to the current issue of the central heating system specifications (CHeSS).

5.6 Water Treatment

Existing system- It is ESSENTIAL that prior to installing the new boiler the system is thoroughly flushed.

New system- For optimum performance after installation, the boiler and its associated central heating system should also be flushed.

Flushing should be carried out in accordance with BS7593: 2006 using a cleanser such as Sentinel X300 or X400, Fernox Restorer or Salamander corrosion guard cleaner.

IMPORTANT: Ensure all cleanser is removed from the whole system before adding an inhibitor.
For long-term corrosion protection, after flushing, an inhibitor should be used, refer to the current issue of BS 5449 and BS 7593 on the use of inhibitors in central heating systems.
Examples are Sentinel X100 Fernox Protector or Salamander corrosion guard inhibitor.

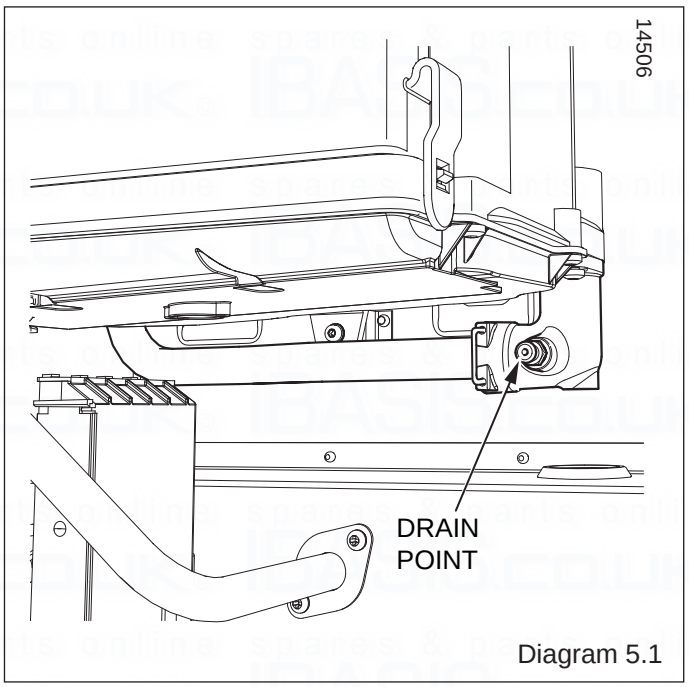

Diagram 5.1

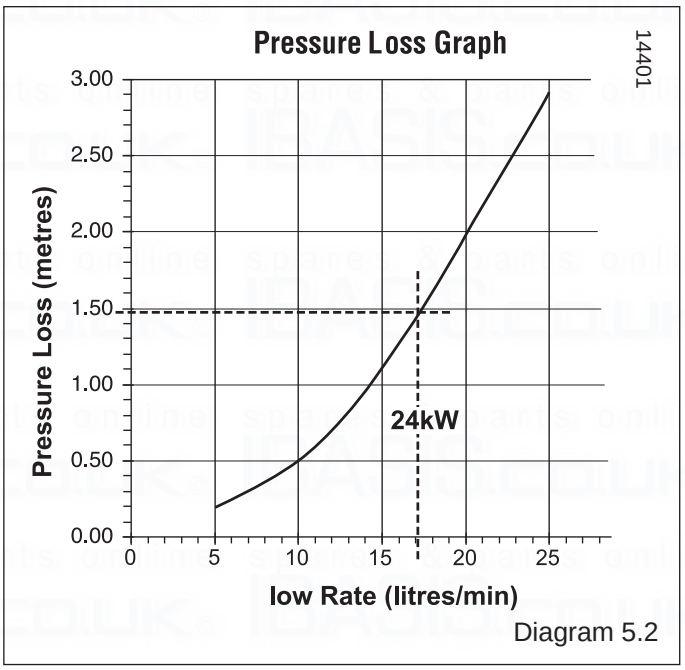

Diagram 5.2

Water System - Domestic Hot Water

5.7 Domestic Hot Water Cylinder

SINGLE FEED INDIRECT CYLINDERS ARE NOT SUITABLE
The domestic hot water cylinder must be of the double feed fully indirect coil type.

5.8 Unvented DHW System

General - All domestic hot water circuits, connections, fittings must be in accordance with the relevant standards and water supply regulations.
For GB: Guidance G17 to G24 and recommendation R17 to R24 of the Water Regulations Guide (for Scotland, the Water Byelaws 2000, Scotland).
Document G Sanitation, hot water safety and water efficiency, section 3 of the building regulations, requires that the installation of an unvented system should be notified to the local authority Building Controls Department and that the work must be carried out by a competent person approved at the time by the Health and Safety Executive, as defined in the approved document G3.
For IE: The current edition of I.S.813 “Domestic Gas Installations”.
Where a storage system will not have a vent to atmosphere the installation must comply with the building regulations and the Water Supply (water fittings) regulations 1999 and water byelaws 2000, Scotland, see also the current issue of BS5546 and BS6700.
If fitting to an existing system the local authority should be informed.

5.9 Vented DHW System

General - All domestic hot water circuits, connections, fittings must be in accordance with the relevant standards and water supply regulations.
For GB: Guidance G17 to G24 and recommendation R17 to R24 of the Water Regulations Guide (for Scotland, the Water Byelaws 2000, Scotland).
For IE: The current edition of I.S.813 “Domestic Gas Installations”.

Water System - Open (Vented) Central Heating System

5.10 Open (Vented) Central Heating System

The boiler must be supplied from an unrestricted water supply taken from a feed and expansion cistern situated at a maximum height of 27 metres (90ft) above the boiler.

The cold feed must be 15mm minimum size.

The vent must rise continuously and be unrestricted.

It is important that the relative positions of the pump, cold feed and open vent are as shown in diagram 5.3.

5.11 Combined Feed and Vent

For combined feed and vent, a 22mm pipe must be fitted in accordance with BS 5449.

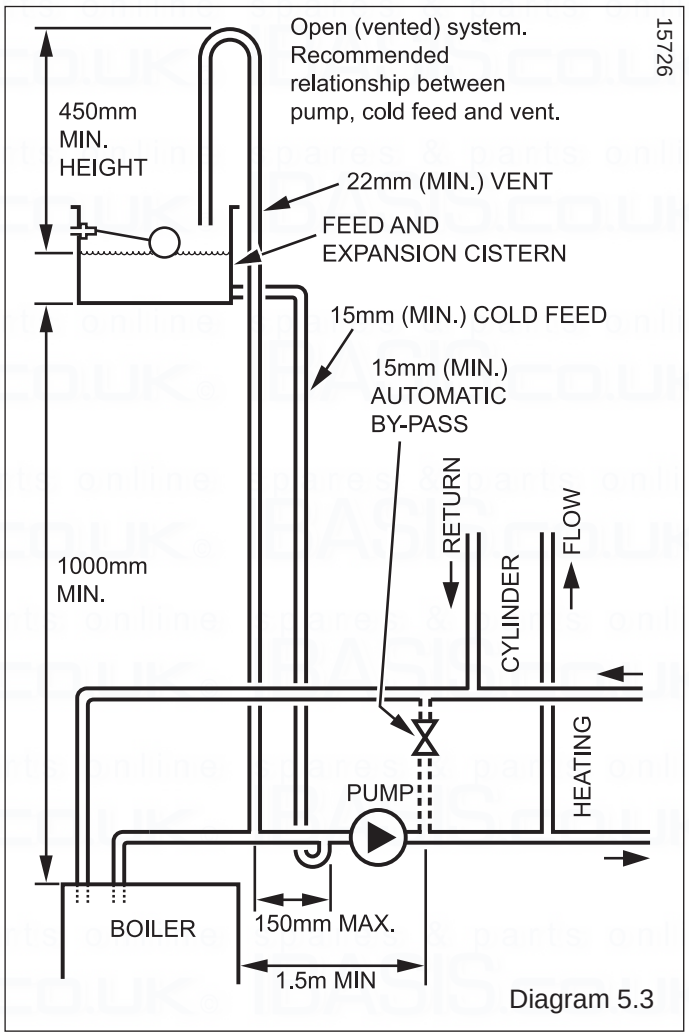

Diagram 5.3

Water System - Sealed Central Heating System

5.12 Sealed Water Systems

The installation must comply with the appropriate requirements of the current issue of BS4814, BS5449, BS6759, BS6798 and BS7074 Part 1 and 2.
See diagram 5.5 for a suggested layout.
An integral sealed system kit is available to convert the open vent boiler to a sealed system boiler.
The kit, refer to diagram 5.4, contains an expansion vessel and flexible pipe to be fitted in the boiler case. A pressure relief valve and auto air vent to be fitted to the system pipework.
NOTE: Depending on the system water content an additional expansion vessel may be fitted or a proprietary kit installed matched to the size of the installed system.

5.13 Safety Valve

A safety valve must be fitted to a sealed system.
It shall be preset, non-adjustable with a lift pressure of 3 bar, incorporating seating of a resilient material, a test device and a connection for drain.
The drain from the safety valve must be routed outside the building it must not discharge above an entrance or window or any type of public access area. It must be clear of any electrical fittings and routed in a continually downward direction and positioned so that any discharge can be seen.

5.14 Expansion Vessel

A diaphragm type expansion vessel, conforming to the current issue of BS4814 (see also BS7074 Part 1 and 2) must be connected at a point close to the inlet side of the circulating pump, see the diagrammatic layout, diagram 5.5.
The expansion vessel volume depends on the total water system volume and the initial system design pressure.

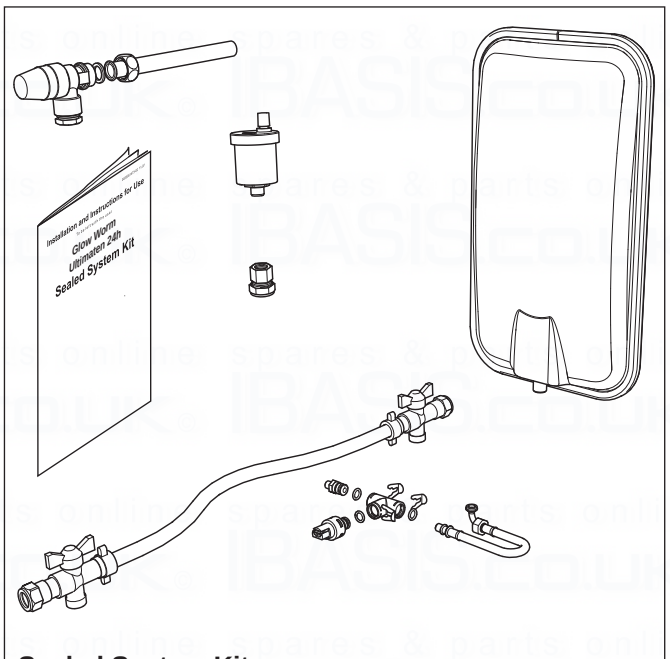

Sealed System Kit Diagram 5.4

For any system an accurate calculation of vessel size is given in the current issue of BS5449 and BS7074 Part 1.
Example: For an initial design pressure of 0.7 bar, the minimum total vessel volume required is 0.063 x Total System Volume.
NOTE: A higher initial design pressure requires a larger volume expansion vessel.
Guidance on vessel sizing is also given in the current issue of BS5449 and BS7074 Part 1, for IE refer to the current edition of I.S.813 “Domestic Gas Installations”.
The charge pressure must not be less than the static head of the system, that is, the height of the highest point of the system above the expansion vessel.

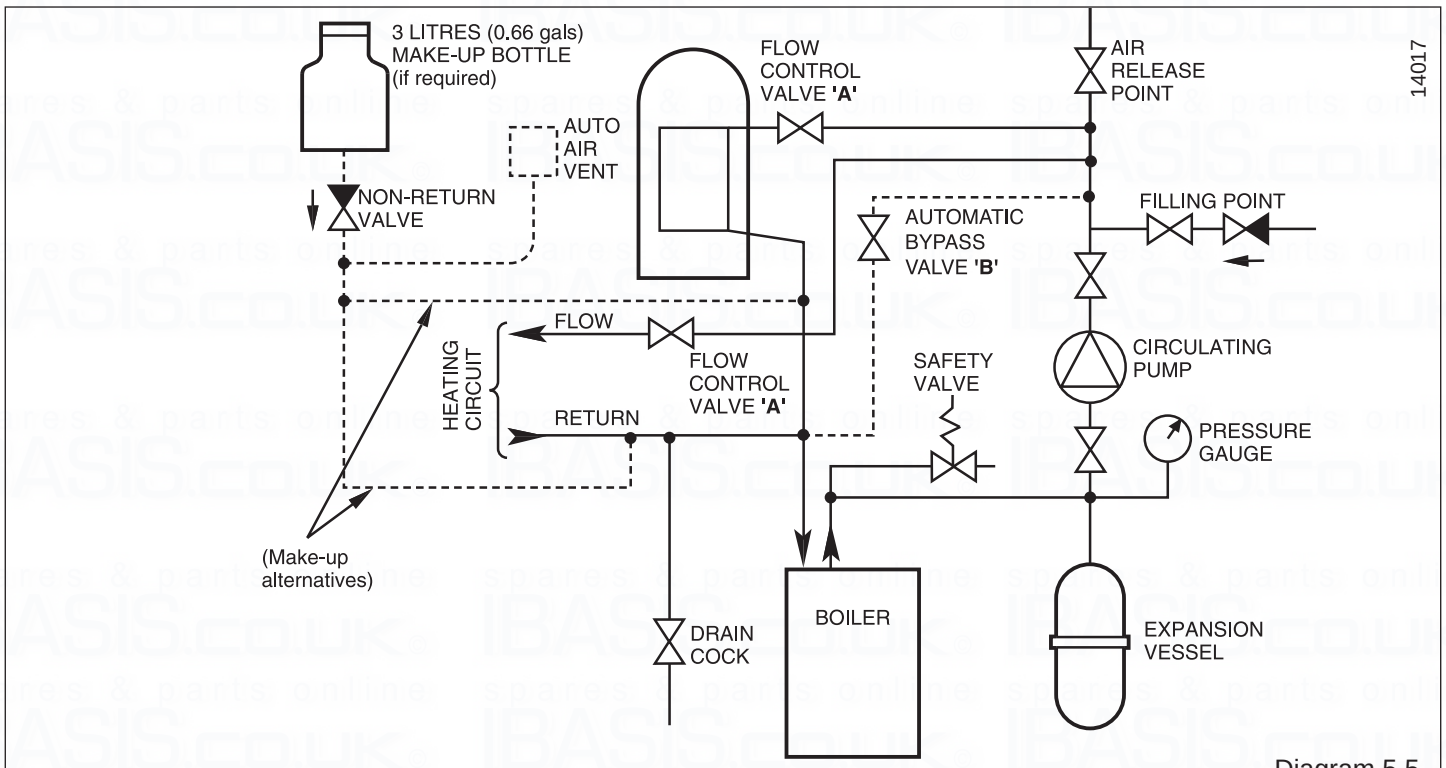

Diagram 5.5

5.15 Pressure Gauge

A pressure gauge with a set pointer and covering at least 0 to 4 bar (0 to 60 lb/in2) shall be fitted permanently to the system in a position where it can be seen when filling the system.

5.16 Water Makeup

Provision should be made for replacing water loss from the system using a make up bottle mounted in a position higher than the top point of the system, connected through a non-return valve to the return side of either the heating circuit or the hot water cylinder.
Alternatively, provision for make up can be made using a filling loop.

5.17 Filling a Sealed Water System

Provision for filling the system at low level must be made, see diagram 5.6. There must be no permanent connection to the mains water supply, even through a non-return valve.

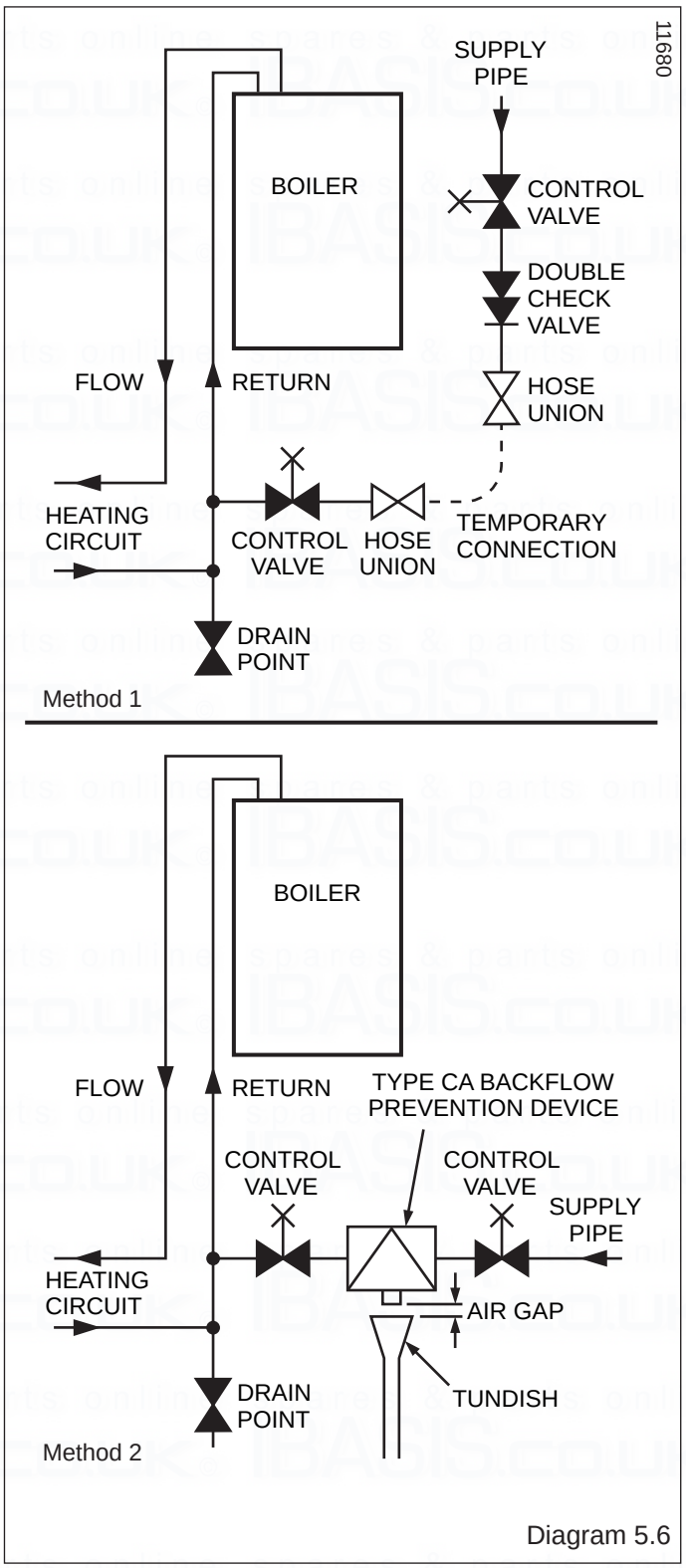

Diagram 5.6

6 Installation Preparation

6.1 Appliance Pack

Please check the contents of packs as shown in diagram 6.1.

The packs are located in the top polystyrene packing.

Remove the carton sleeve and top pack then lift the boiler and its polystyrene base support out of the lower pack.

6.2 Site Requirements

The boiler mounting wall should be suitable for the weight of the appliance and be true and flat.

NOTE: Due to the varied site conditions we do not supply fixings and advise that the installer should supply those which are suitable.

6.3 Wall Template

Take the wall template from the document pack located within the top polystyrene packing and place in the desired position on the wall, giving due consideration to the required boiler clearances, see section 3, and the flue you are fitting.

Mark the position of the flue centre, if fitting a side flue, extend the flue centre line into the corner then 149mm along the adjacent wall, see diagram 6.2.

For extended side flues, the flue hole centre should be determined by extending the dashed inclined line on the template to the side wall, then 149mm along the adjacent wall, see diagram 6.2. This dashed line is drawn at 44mm/metre (2.5°) rise from the boiler.

To allow for the flue passing through the wall at this angle a 125mm hole should be drilled irrespective of internal or external installation.

Remove the wall template whilst drilling the flue hole.

6.4 Flue Hole Cutting

External access flue installation can use a 105mm diameter core drill.

Internal access only flue installation will need a 125mm diameter core drill.

NOTE: The flue is designed with an internal fall of 44mm/metre (2.5°), therefore the hole can be drilled horizontally.

If flue extension pipes are to be used then a core drill size of 125mm is required. This will allow the extension pieces to slope at 44mm/metre (2.5°) towards the boiler.

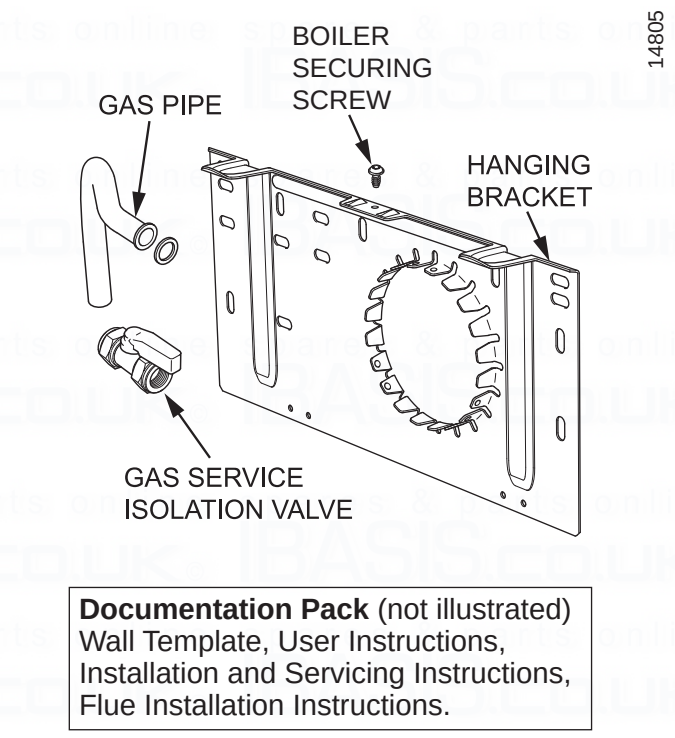

Diagram 6.1

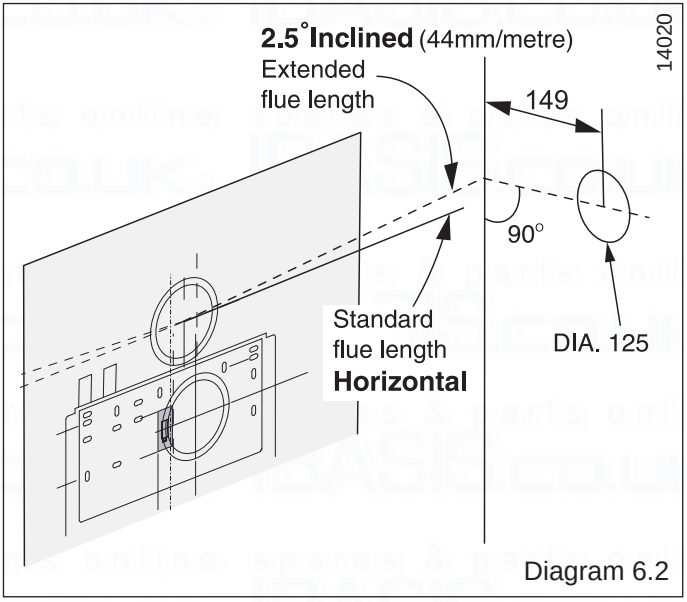

Diagram 6.2

7 Boiler Fixing

7.1 Wall Hanging Bracket

The Wall Hanging Bracket is supplied in the main boiler packaging.

Reposition the wall template over the flue hole and mark the position of the fixing holes for the hanging bracket, see diagram 7.1.

NOTE: Due to the varied site conditions we do not supply fixings and advise that the installer should supply those which are suitable.

Drill fixing holes and insert suitable wall plugs.

Direct Rear Flue only - If external access is not available the flue to be used should be assembled as described in the separate flue instructions and inserted through the hole in the wall before fitting the wall hanging bracket.

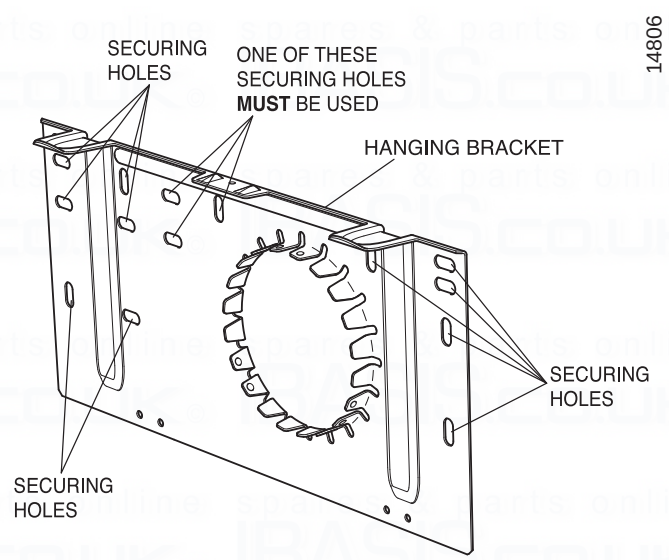

Diagram 7.1

7.2 Boiler Hanging

IMPORTANT: With regards to the Manual Handling Operations, 1992 Regulations, the following lift operation is deemed to be a one man lift, refer to section 16 Manual Handling.

IMPORTANT: Direct Rear Flue only - The direct rear flue must be fitted before hanging the boiler, refer to the separate flue instructions, and the rear outlet cover plate should be removed.

Lifting the boiler into position, lean the top of the boiler slightly to the wall and position just above the hanging bracket. Lower the boiler slowly, push back and engage onto the hanging bracket making sure the boiler is located over the retaining bosses, secure with screw provided, see diagram 7.2.

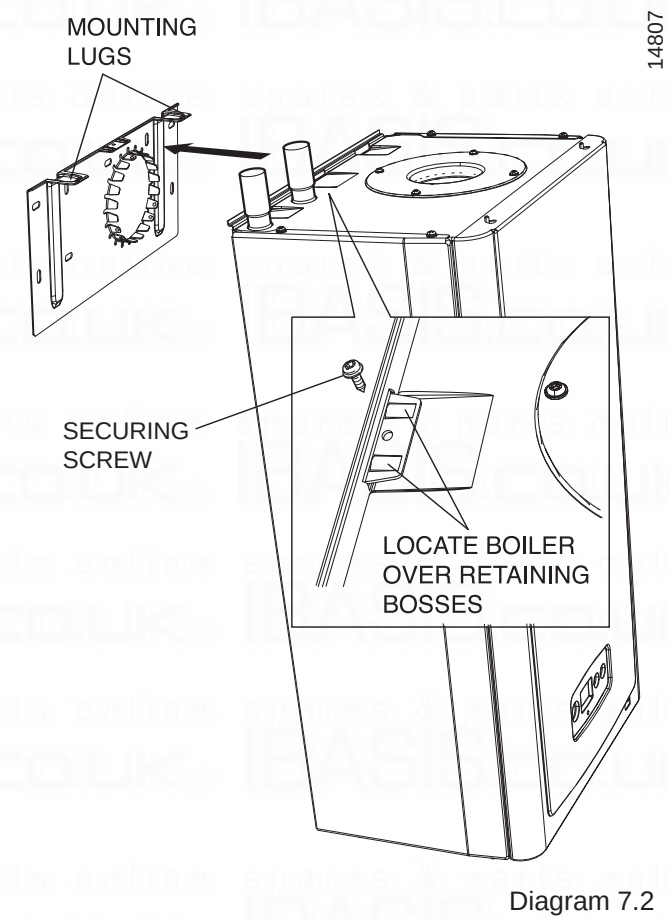

Diagram 7.2

8 Gas/Water and Appliance Connection

8.1 Gas Connection

Before connection check the supply of local gas.
The gas supply connection is below the boiler, see diagram 8.1.
The whole of the gas installation, including the meter, should be inspected, tested for tghtness and purged in accordance with the current issue of BS6891 and in IE the current edition of I.S.813 “Domestic Gas Installations”.

8.2 Water Connections

Provision is made for the water connections to be made from above the boiler, see diagram 8.1. The position is shown on the wall template.
Flush out the domestic hot water and the heating systems before connecting to the boiler.

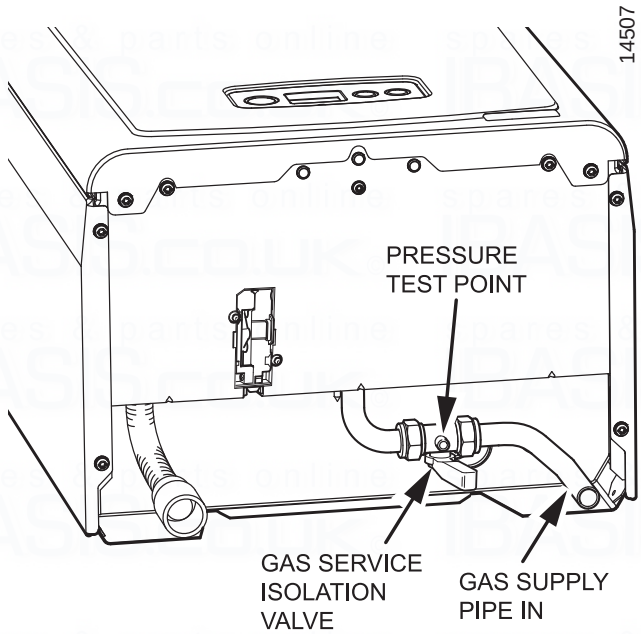

Gas Connection

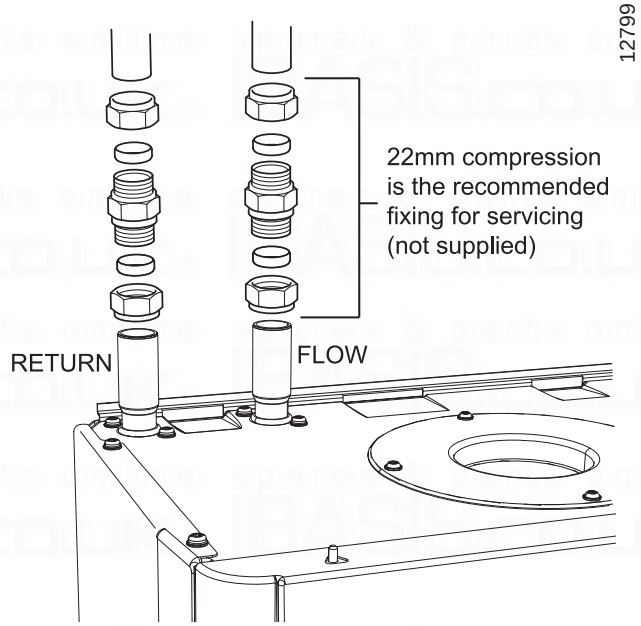

Water Connections

Diagram 8.1

9 Condensate Connections

9.1 Condensate Drain Connection

The condensate drain connection, is positioned below the boiler as shown in diagram 9.1. To discharge condensate to a drain, the drain pipe should have a fall of a least 44mm/metre (2.5°) away from the boiler.
Condensate should, if possible be discharged into the household internal drainage system. If this is not practicable, discharge can be allowed into the external household drains or a purpose designed soak away, refer to diagram 9.2.
It is recommended that any external condensate drain pipe is protected and also preferably of 32mm diameter, to prevent freezing in adverse weather conditions.
The condensate is discharged periodically in ‘slugs’ by siphonic action.
It is not necessary to provide air breaks or extra traps in the discharge pipe as there is already a trap inside the boiler. Fitting an extra trap may cause the boiler siphon to work incorrectly.
Refer to BS5546 or BS6798 for advice on disposal of boiler condensate.

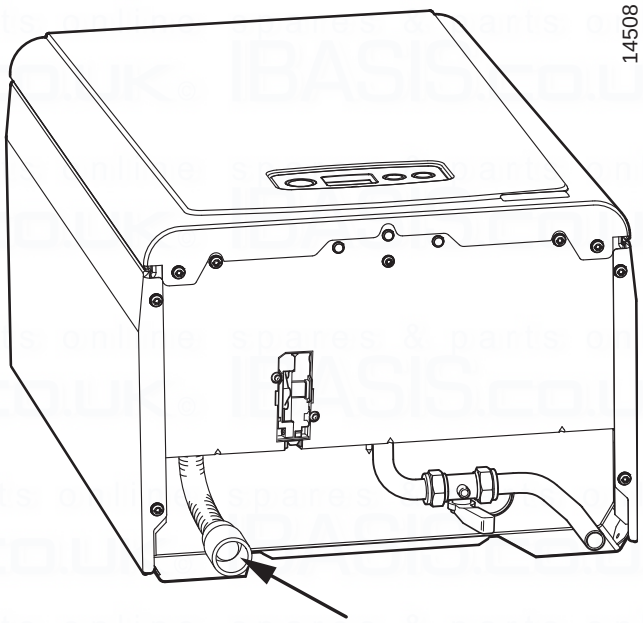

Diagram 9.1

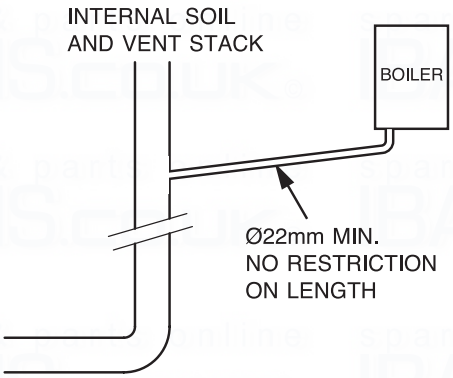

Internal Soil and Vent Pipe

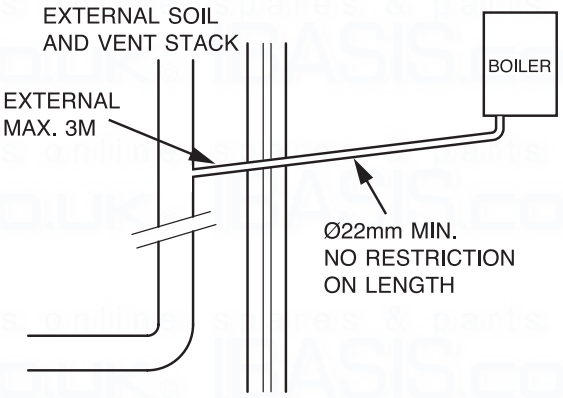

External Soil and Vent Pipe

15826

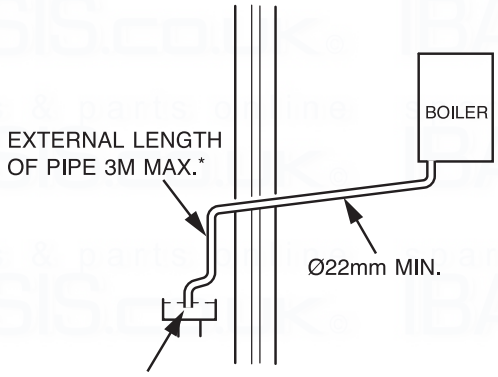

*NOTE: FOR EXTENDED PIPE RUNS 32mm DIA. PIPE SHOULD BE USED.

External Termination to a Gulley or Hopper

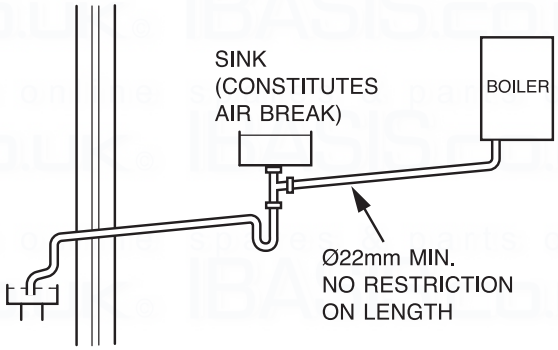

Internal Termination into Combined Sink Waste

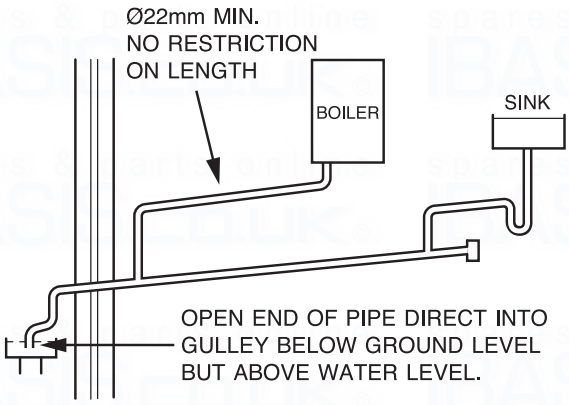

Internal Termination Downstream of Sink Waste

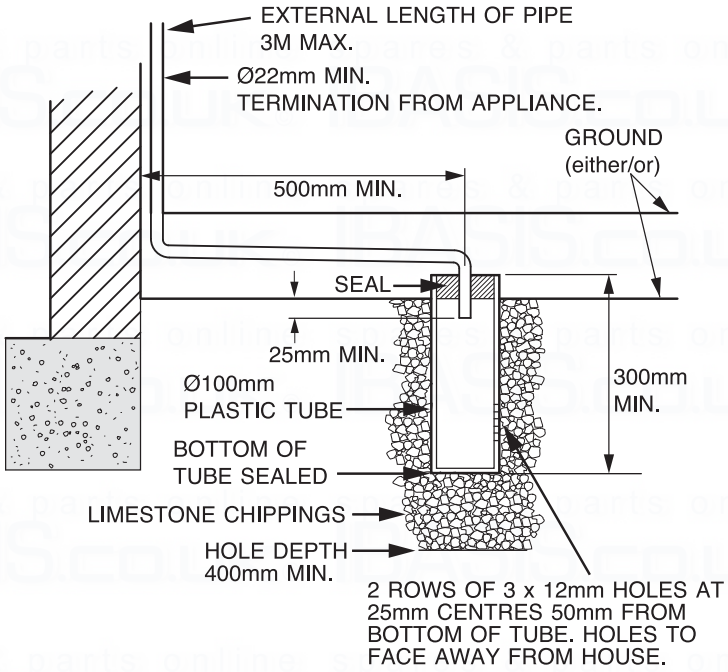

External Termination into Soakaway

NOTE: PIPEWORK SHOULD ALWAYS FALL AWAY FROM BOILER BY AT LEAST 2.5° 44mm FOR EVERY 1M.

Diagram 9.2

10 Electrical Connection

WARNING: This appliance must be earthed.

- This appliance must be wired in accordance with these instructions. Any fault arising from incorrect wiring cannot be put right under the terms of the Glow-worm guarantee.
- All system components must be of an approved type. Electrical components have been tested to meet the equivalent requirements of the BEAB.
- Do not interrupt the mains supply with a time switch or programmer.
- Connection of the whole electrical system and any heating system controls to the electrical supply must be through a common isolator.
- Isolation should preferably be by a double pole switched fused spur box having a minimum contact separation of 3mm on each pole. The fused spur box should be readily accessible and preferably adjacent to the boiler. It should be identified as to its use.
- A fused three pin plug and shuttered socket outlet may be used instead of a fused spur box provided that it is not used in a room containing a fixed bath or shower.
- The boiler is suitable for installation in bathroom zones 2 and 3.

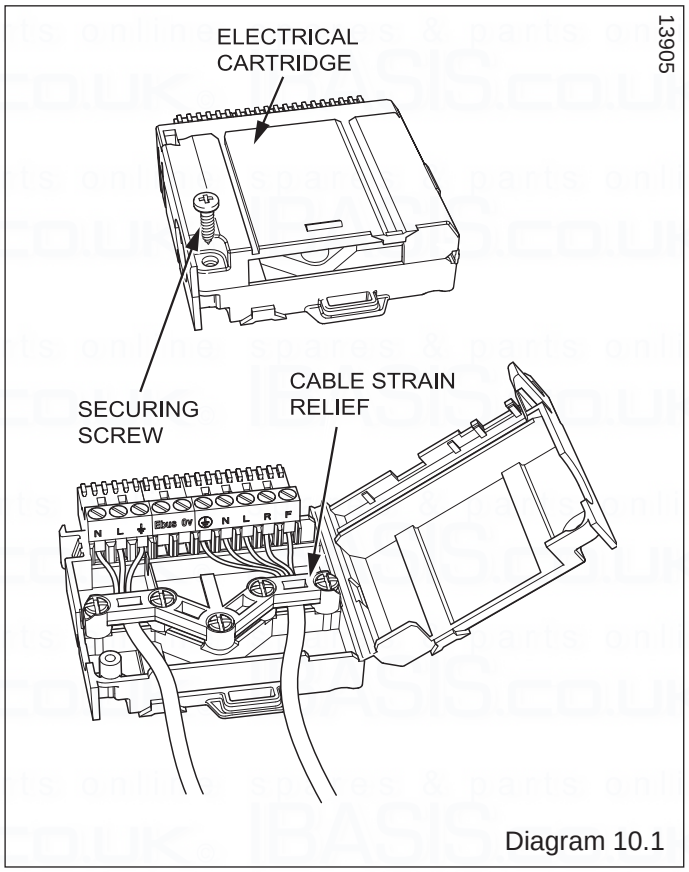

Diagram 10.1

10.1 Electrical Wiring

Remove the electrical cartridge from the fittings pack.

Remove the securing screw to open the cartridge, see diagram 10.1.

NOTE: There are two screws supplied loose in the electrical cartridge, these will be required to secure the cartridge into the electrical interface housing.

Slacken the cable strain relief screws in the electrical cartridge, see diagram 10.1.

Route the mains supply and system cables through the strain relief and connect to the relevant plug, see diagram 10.2.

10.2 Pump Wiring

Ensure that a seperate pump supply cable is routed through the strain relief and connected to the relevant plug, see diagram 10.2.

Slacken the cable strain relief and route the pump electrical supply cable and connect as shown in diagrams 10.1 and 10.2.

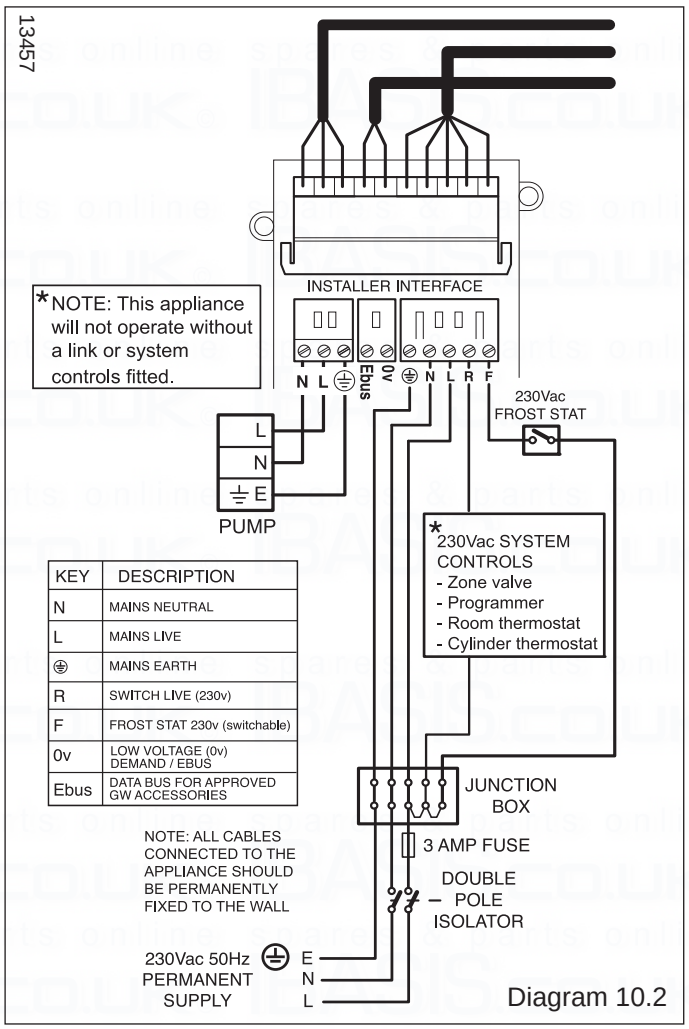

KEY	DESCRIPTION
N	MAINS NEUTRAL
L	MAINS LIVE
⏚	MAINS EARTH
R	SWITCH LIVE (230v)
F	FROST STAT 230v (switchable)
0v	LOW VOLTAGE (0v) DEMAND / EBUS
Ebus	DATA BUS FOR APPROVED GW ACCESSORIES

Diagram 10.2

10.3 Electrical Cartridge Securing

Close the cartridge and secure with the previously removed screw.
Push the electrical cartridge into the interface housing on completion of the wiring, see diagram 10.3.
Secure with the two cartridge retaining screws provided in the cartridge body.

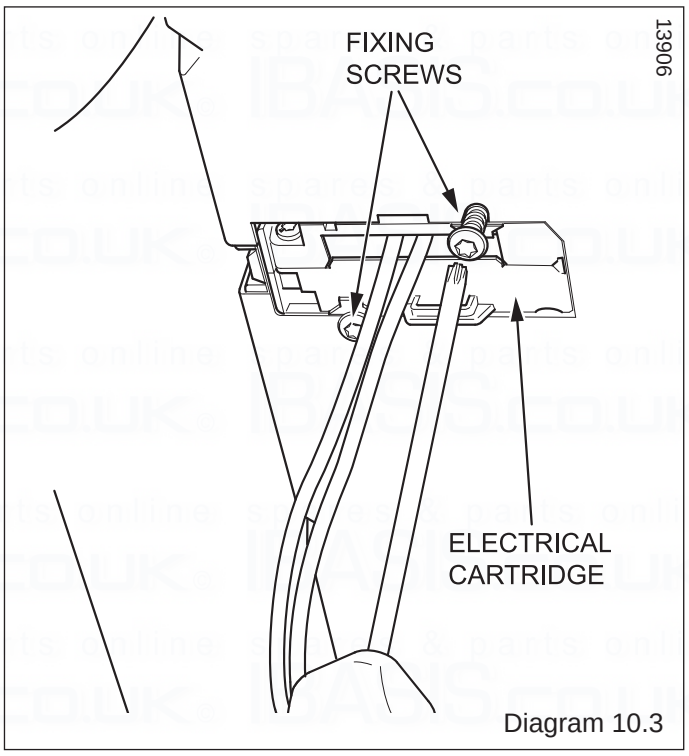

Diagram 10.3

10.4 Electrical Connections - Testing

Carry out preliminary electrical system checks as below:
1. Test insulation resistance to earth of mains cables.
2. Test the earth continuity and short circuit of cables.
3. Test the polarity of the mains.

NOTE: If you require to test the appliance refer to section 13.

11 Commissioning

IMPORTANT: At the time of commissioning, complete all relevant sections of the Benchmark Checklist located in the inside back pages of this document.

11.1 Preliminaries - All Systems

DO NOT operate the boiler without water.
The commissioning should be carried out by a **competent person** approved at the time by the Health and Safety Executive in accordance with the current issue of BS6798.
Make sure that the system has been thoroughly flushed out with cold water and that all cleanser, if used, has been removed.
With the gas service isolation valve closed, with no demand from any external controls and the power supply to the boiler switched off, test for gas soundness and purge air from the gas supply.

11.2 Filling the Heating Circuit

With the gas service isolation valve closed and with no demand from any external controls.

1. Fill the heating system.
   Sealed system only - fill the system to a pressure of 1.0bar.
2. Vent all air from the system - repeat as neccessary until the system is full and all the air has been vented.

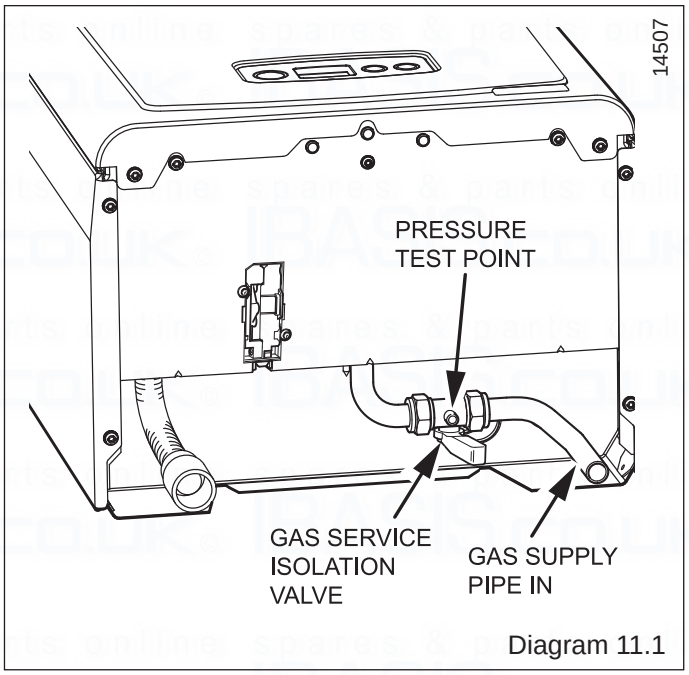

Diagram 11.1

11.3 Gas Supply

The gas valve is factory set for natural gas (G20) and should need no adjustment. Turn on the gas supply at the isolation valve, see diagram 11.1. Check the supply pressure at the pressure test point is 20mbar.

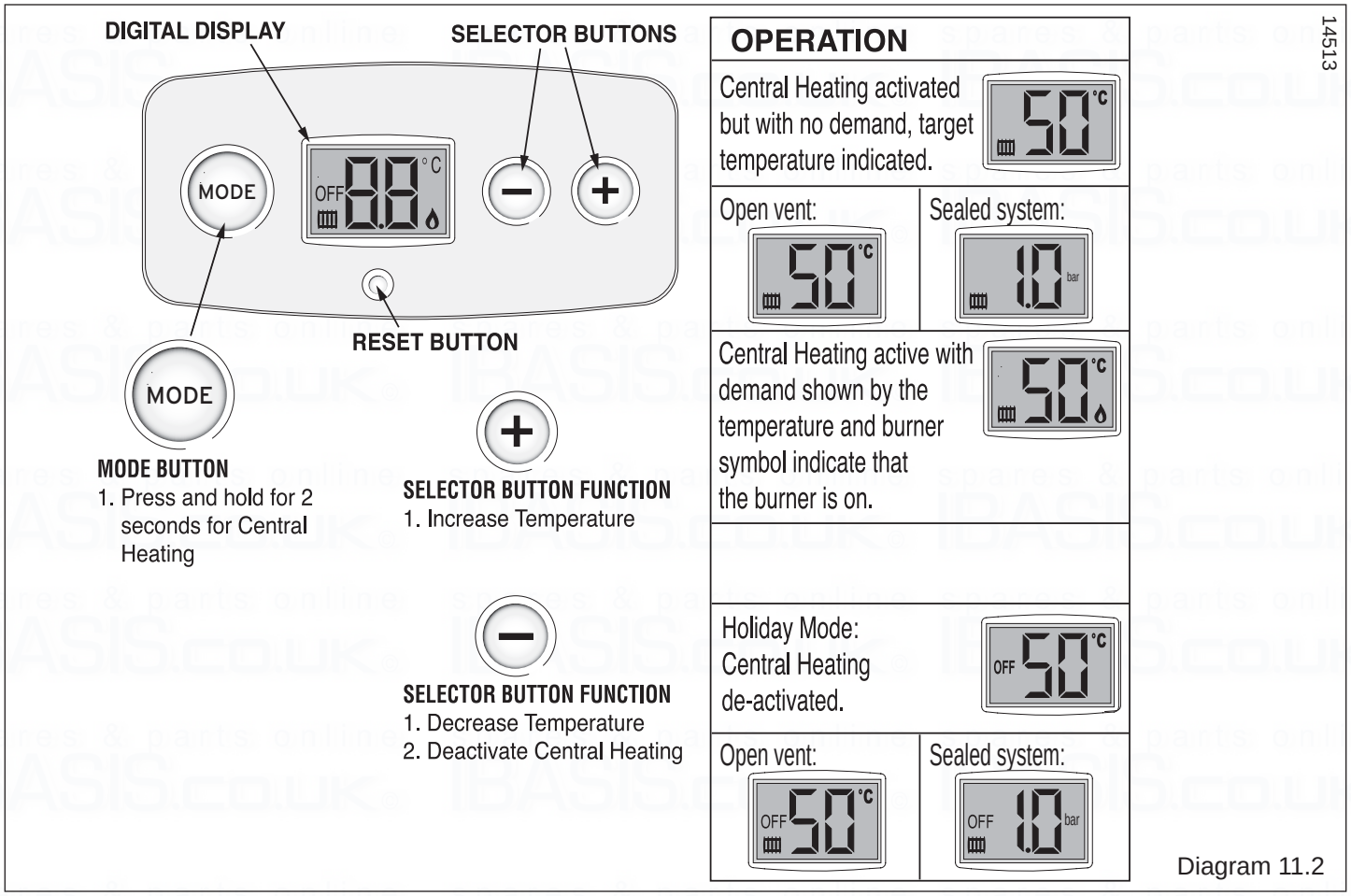

Diagram 11.2

Commissioning should only be carried out by a **competent person** approved at the time by the Health and Safety Executive.

11.4 Initial Lighting

NOTE: The combustion for this appliance has been checked, adjusted and preset at the factory for operation on natural gas (G20) as defined on the appliance data label. Do not adjust the Gas/Air ratio valve.
No measurement of the combustion is necessary, having checked :

- the appliance has been installed in accordance with the instructions.
- the integrity of the flue system and flue seals.
- that all internal/external controls are calling for heat.
- the gas service isolation valve, diagram 11.1, is open.

As an option, a chargeable boiler performance and function service can be provided by Glow-worm Service by calling telephone No. 01773 828100.

DO NOT operate the boiler without water.
The lighting procedure of the boiler is fully automated.
Refer to diagram 11.2.

- With no demand from any external controls, switch on the electrical supply to the boiler.
- Open the gas service isolation valve, see diagram 11.1.
- The appliance will enter a self checking routine then the fan should start and the ignition will commence.

The boiler, if necessary, will automatically repeat the ignition sequence a further 4 times.

- If the burner fails to ignite “F1” will be displayed, initially, this may be due to air in the gas supply line.
- Once the system has been purged of air. Press and hold the “ Mode “ button of the boiler user controls for 2 seconds, the Central Heating symbol, will flash. Use the “SELECTOR” buttons to adjust CH temperature.

After 10 seconds of inactivity the display will reset to indicate the water temperature.

- Turn ON your external controls and select the room temperature required.

The boiler will operate automatically.
NOTE: The display will indicate the Heating system water temperature or a fault code if in a fault condition.

11.5 Check the Gas Inlet Pressure & Gas Rate

The supply from the governed meter must be of adequate size to provide a steady inlet working pressure of 20mbar (8in wg) at the boiler. On completion, test the gas installation for tightness using the pressure drop method and suitable leak detection fluid, purge as necessary.
NOTE: to verify the maximum gas rate CO2 setting, first ensure the boiler temperature is set to 82°C. Then turn on the boiler in central heating mode and check te gas rate at the meter. Ensure that gas rate is fully recorded before the boiler reaches 82°C (check the boiler display).

Operational Gas Inlet Pressure

With ALL other gas appliances operating, check the operational supply pressure at the gas service isolation valve test point, see diagram 11.1.

The nominal supply pressure for Natural Gas (G20) is 20mbar.

Turn the taps and appliances off, then disconnect the pressure gauge.

Additionally the safe nominal maximum heat input of the appliance can be achieved at an inlet pressure down to 15mbar.

NOTE: The **BURNER PRESSURE** cannot be measured.

Gas Rate

Make sure that ALL other gas burning appliances and pilot lights are off.

Check the gas rate using the gas meter test dial and stop watch, at least 10 minutes after the burner has lit.

11.6 Boiler Output

The boiler is fully modulating and is factory set at 18kW, Max output. However, if desired, it is possible to change the boiler output between 10 and 24 kW in 1 kW increments. This should be done by a **competent person** approved at the time by the Health and Safety Executive and in accordance with the relevant standards, refer to section 11.

11.7 System Identification

Use one of the markers supplied in the loose items pack to clearly mark if the boiler has been fitted to an open vented or sealed system.

If the boiler output for heating or tank loading has been adjusted from the factory pre-set of 18 kW, this must be clearly marked on the label fixed to the base of the boiler using one of the markers supplied in the loose items pack.

11.8 Heating System

Ensure that the external controls are calling for heat.

Fully open all radiator valves, flow control valve and bypass valve if fitted.

Balance the radiators as required and if fitted adjust flow control valve to give the required system differential. Turn off all radiators that can be shut off by the user and check to see if less than the maximum differential allowed of 20^0C can be achieved across flow and return.

NOTE: Allow the system to reach maximum temperature then switch off the boiler by isolating from the electrical supply.

Drain the entire system rapidly whilst hot, using the drain tap at the lowest part of the system. Fill and vent the system as described previously in section 11.2

Lock or remove the handle from controls valve, if fitted.

Adjust the boiler temperature controls and any system controls to their required settings.

11.9 Completion

Ensure that the magnetic lighting instruction label is placed on the surface of the boiler casing.

GB: It is a requirement that the “Benchmark” Installation Commissioning and Service Record is completed and left wth the user.

IE: it is necessary to complete a “Declaration of Conformity” to indicate compliance to I.S.813. An example of this is given in the current edition of I.S.813.

11.10 Instruct the User

● Demonstrate, then instruct the User about the lighting procedure and heating system controls operation.

● Advise that to ensure the continued efficient and safe operation of the boiler it is recommended that it is checked and serviced at regular intervals. The frequency of servicing will depend upon the installation conditions and usage, but in general, once a year should be enough.

● Draw attention, if applicable, to the current issue of the Gas Safety (Installation and Use) Regulations, Section 35, which imposes a duty of care on all persons who let out any property containing a gas appliance in the UK.

● The user shall not interfere with or adjust sealed components.

● It is the Law that any servicing is carried out by a **competent person** approved at the time by the Health and Safety Executive.

● Advise the user that, like all condensing boilers this appliance will produce a plume of condensation from the flue terminal in cool weather. This is due to the high efficiency and hence low flue gas temperature of the boiler.

● Advise the user of the precautions necessary to prevent damage to the system, boiler and the building, in the event of the heating system being out of use during frost or freezing conditions.

● Advise the user that the permanent mains electrical supply SHOULD NOT be switched off, as the built in frost protection and pump saver program will not operate.

● Advise the User if the mains electricity and gas are to be turned off for any long periods during severe weather, it is recommended that the whole system, including the boiler, should be drained to avoid the risk of freezing.

NOTE: Sealed System: Contact your installation/servicing company as draining, refilling and pressurising MUST be carried out by a **competent person** approved at the time by the Health and Safety Executive.

● Leave these instructions and the ‘Benchmark’ Installation, Commissioning and Service Record with the user.

IMPORTANT NOTES:

1. To ensure the continued efficient and safe operation of the boiler it is recommended that it is checked and serviced at regular intervals. The frequency of servicing will depend upon the particular installation and usage, but in general once a year should be enough.
2. It is the Law that any servicing is carried out by a **competent person** approved at the time by the Health and Safety Executive**.**
3. Before commencing with a service or replacement of parts the boiler should be isolated from the electrical supply and the gas supply should be turned off at the gas isolation valve.
4. When replacing a part on this appliance, use only spare parts that you can be assured conform to the safety and performance specification that we require. Do not use reconditioned or copy parts that have not been clearly authorised by Glow-worm.
5. If any electrical connections have been disconnected and after their connection, checks to the earth continuity, polarity, short circuit and resistance to earth must be repeated using a suitable multimeter, as described in section 13.
6. After servicing, complete the relevant Service Interval Record section of the Benchmark Checklist located in the inside back pages of this document.

12 Servicing

General Inspection

Prior to, during servicing and after any maintenance or changed parts, the following must be checked.
● The integrity of the flue system and flue seals.
● The integrity of the appliance combustion circuit and relevant seals.
● Electrical, gas and water connections.
● System pressure.
● the combustion performance, refer to the following procedure.
● The operational gas inlet pressure and gas rates, refer to the commissioning section paragraph 11.5.
Correct any fault before continuing.

COMPETENCY TO CARRY OUT THE CHECK OF COMBUSTION PERFORMANCE

NOTE: BS 6798: 2009 Specification for installation and maintenance of gas-fired boilers of rated input not exceeding 70kW net advises that:
● The person carrying out a combustion measurement must be assessed as competent in the use of a flue gas analyser and the interpretation of the results.
● The flue gas analyser used should be one meeting the requirements of BS7927 or BS-EN50379-3 and be calibrated in accordance with the analyser manufacturers' requirements.
● Competence can be demonstrated by satisfactory completion of the CPA1 ACS assessment, which covers the use of electronic portable combustion gas analysers in accordance with BS 7967, parts 1 to 4.
● Ensure that the gas analyser is set to the correct fuel setting.
● Press and hold the " Mode " button of the boiler user controls for 2 seconds, the Central Heating symbol, will flash, refer to commissioning section. The boiler should fire automatically.
NOTE: Safe combustion can only be verified by measuring CO/CO2 ratio. This must not exceed the value shown in the table below.

G20 BURNER % CO_2			
MODEL	**CHECK**	**SETTING**	**CO/CO_2 ratio**
ULTIMATE 24h	8.8 to 9.8	9.2 +0.3 - 0.3	0.004

COMBUSTION CHECK AND SETTING THE AIR/ GAS RATIO VALVE

● Remove the front casing panel, see diagram 12.2 and hinge down the control box. Taking care not to touch any internal components, proceed as follows:
● Connect the CO2 combustion analyser to the relevant test point, see diagram 12.1.

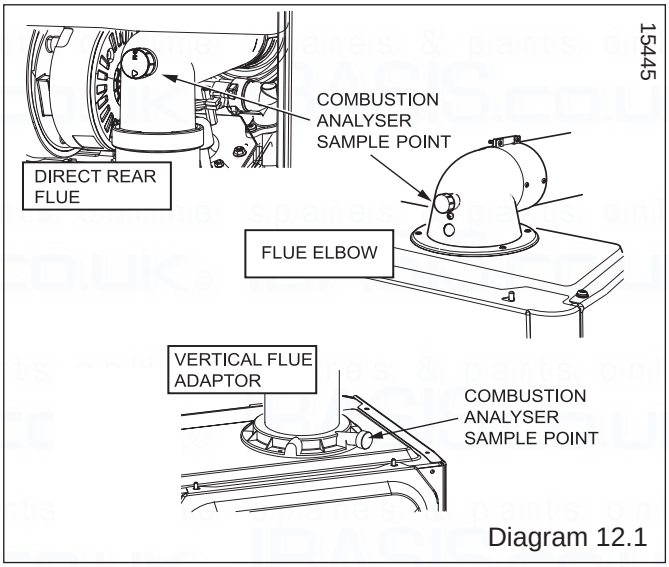

Diagram 12.1

1. Rate Check and Adjustment

Note: to verify the gas rate and CO2 setting, first ensure the boiler temperature is set to 82 egrees.**
Then turn on the appliance - check the maximum gas rate at the meter.

Leave for 10 mins to stabilise, Now check the minimum gas rate CO2 setting:
Press and release the "reset" button on the controls fascia, then immediately press and hold in either of the "+" buttons. After approximately 5 seconds "Hi" will be displayed. Pressing the "+" or "-" buttons will toggle between "Hi" and "Lo". Press the mode button when "Lo" is selected, this will force the boiler to minimum rate and the display will flash "Lo", indicating the boiler is operating at minimum.
● Wait until the CO2 value is stable and check that the value is within the range specified in table in the "check" column.
If adjustment is necessary, proceed as follows:
NOTE: Adjustment of the CO2 at minimum rate is very coarse and should not be adjusted more than an ⅛ of a turn at a time. Wait 1 minute to allow the appliance to stabilise before checking or making further adjustments.

● Gradually rotate the “offset adjustment” (anti-clockwise to decrease) to the required CO2, refer to diagram 12.4 and the “SETTING” column in the table. then check the CO/CO2 combustion ratio does not exceed the value in the CO/CO2 column of the table.
● Exit the minimum rate function to return to the normal operation of the boiler:- press the “mode” and “+” buttons simultaneously, this will reset the boiler to the default display.

During the normal operation of the boiler - check the combustion again at high rate.

If the combustion reading is not within the acceptable values AND the integrity of the complete flue system and combustion circuit seals have been verified and the inlet gas pressure (and gas rate) have been verified, then, it will necessary to adjust the combustion rate of the appliance.
NOTE: Adjustment is made by turning the gas valve throttle an ⅛ of a turn, waiting 1 minute to allow the appliance to stabilise before checking or making further adjustments.
Rotate the “throttle”(anti-clockwise to increase), to the required CO2, refer to diagram 12.4 and the “SETTING” column in the table. Then check the CO/CO2 combustion ratio does not exceed the value in the CO/CO2 column of the table.

Re-Check CO2 and check the CO/CO2 combustion ratio.
If the CO2 levels have had to be adjusted, Re-check the maximum and minimum CO2 values to ensure that they are within the “setting” limits in the table then check the CO/CO2 combustion ratio does not exceed the value in the CO/CO2 column of the table. If the CO/CO2 ratio exceeds the value in the table, a complete servicing of the appliance will be necessary, refer to section 12.1.
If the CO2 and the CO/CO2 ratio falls within the tolerances quoted, exit the function press the “mode” and “+” buttons simultaneously, this will reset the boiler to the default display.
Remove the analyser probe and replace the cap on the sampling point, replace the controls fascia, inner and front casing panels.

IMPORTANT: Remember to replace the sample point cap on completion of the test.

**Note- if the system is used in conjunction with weather compensation then conduct the above checks with the appliance running in DHW mode , ensuring that the boiler temperature is set to 82 degrees.

COMPLETION

If it is not possible to achieve the required results for either the combustion or gas rates, it will be necessary to complete a full service of the appliance and then repeat the combustion check procedure. If after servicing and adjustment of the appliance the combustion values are still unacceptable and after further remedial work has been carried out, the appliance must be disconnected until the CO/CO2 ratio is acceptable. Advice can be sought from the Glow-worm Technical Helpline.

12.1 Servicing

NOTE: If the Combustion CO2, CO/CO2 ratio & Gas rate checks did not require adjustment then it will not be necessary to complete a full service.
All routine servicing requirements can be achieved by the removal of the front panel, see diagram 12.2. Position the control box into the service position, see diagram 12.3. Before commencing with a service or replacement of parts. The boiler should be isolated from the electrical and gas supplies.

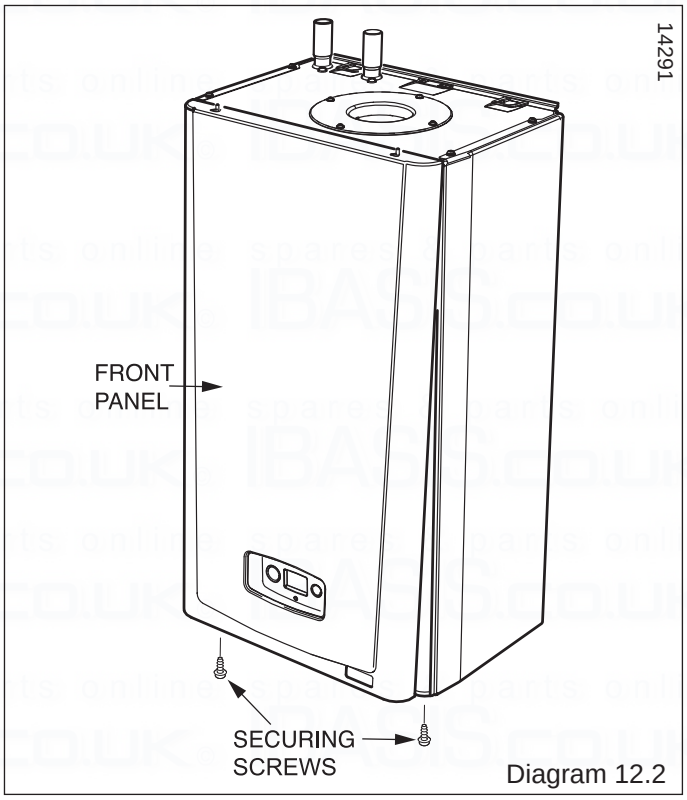

Diagram 12.2

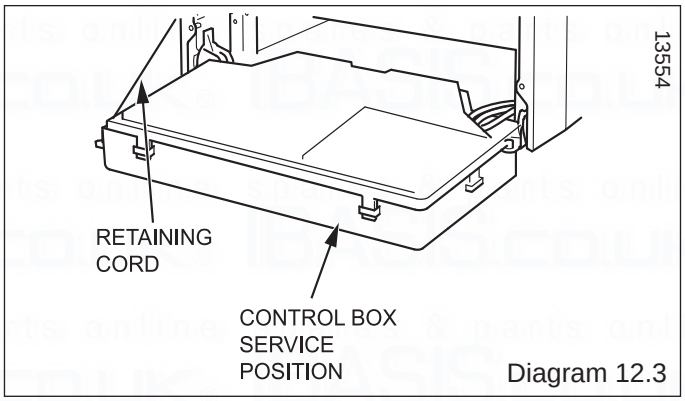

Diagram 12.3

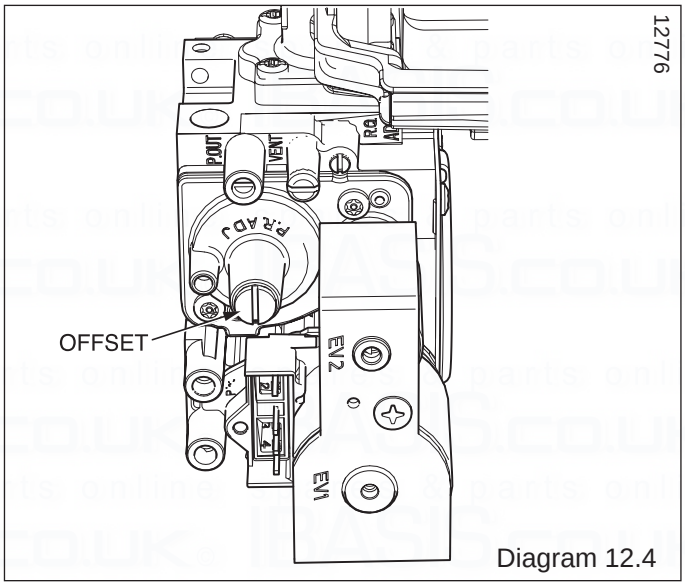

Diagram 12.4

12.4 Spark Electrode

NOTE: If the functional checks did not indicate poor combustion then it is not necessary to service this component.

Ease the securing clips away from the sump to release the retaining catch then push the flue hood up to disengage from the sump, see diagram 12.5.

To remove, swivel flue hood 90º and pull down and out, see diagram 12.5.

Check seal for wear or damage and replace if necessary.

IMPORTANT: Do not allow fixings, nuts, screws, etc. to fall into the open flue hood sump, use a temporary cover whilst removing any parts.

Disconnect the spark electrode plug and earth lead. Remove the two securing screws and withdraw the spark electrode carefully from the combustion chamber, see diagram 12.6.

Inspect the tips for damage.

Clean away any debris and check the spark gap is 4mm.

Check the electrode gasket for signs of damage and replace if necessary.

12.5 Burner

NOTE: If the functional checks did not indicate poor combustion then it is not necessary to service this component.

Disconnect the gas supply at the gas valve and electrical connections, see diagram 12.7.

The Silencer (front) is a push fit, so there is no need for tools to remove or fit, see diagram 12.8.

Release the igniter unit support bracket, see diagram 12.9.

Remove the fan retaining bracket.

To ease removal of the securing nut from the fan retaining bracket, a flat bladed screwdriver can be used in the position shown and gently levered down as indicated, see diagram 12.10.

Remove the fan and gas valve assembly.

The silencer (rear) is a push fit so no tools are required for its removal or fitting, see diagram 12.11.

Check the spark electrode gap is 4mm. Clean and adjust as necessary, see diagram 12.6.

It should not be necessary to remove the spark electrode from the burner during servicing.

Remove the flanged nuts and studs that secure the burner, note that two studs at the rear also hold the fan clamping bracket, see diagram 12.12.

Clean the burner with a soft brush taking great care not to damage the surface of the burner. **DO NOT** use wire or sharp instruments to clean the mesh of the burner.

NOTE: The burner gasket should be inspected but will not need replacing unless there are signs of wear or damage.

Follow the tightening sequence when re-fitting the burner, see diagram 12.12.

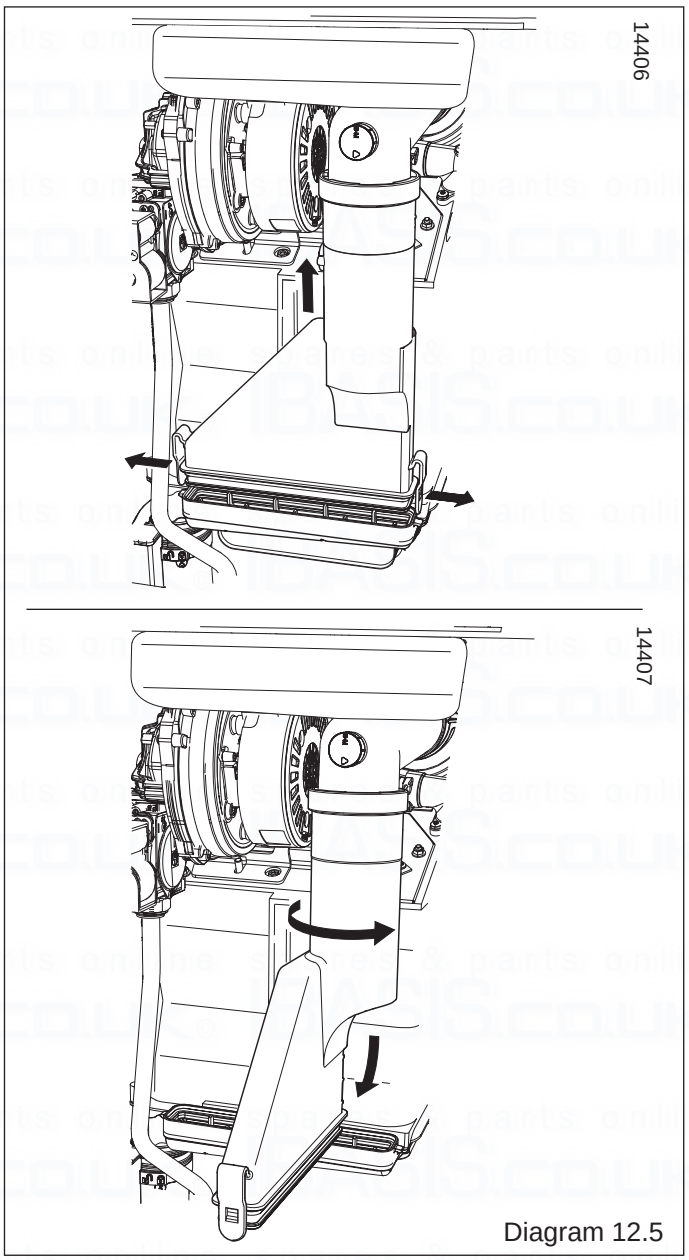

Diagram 12.5

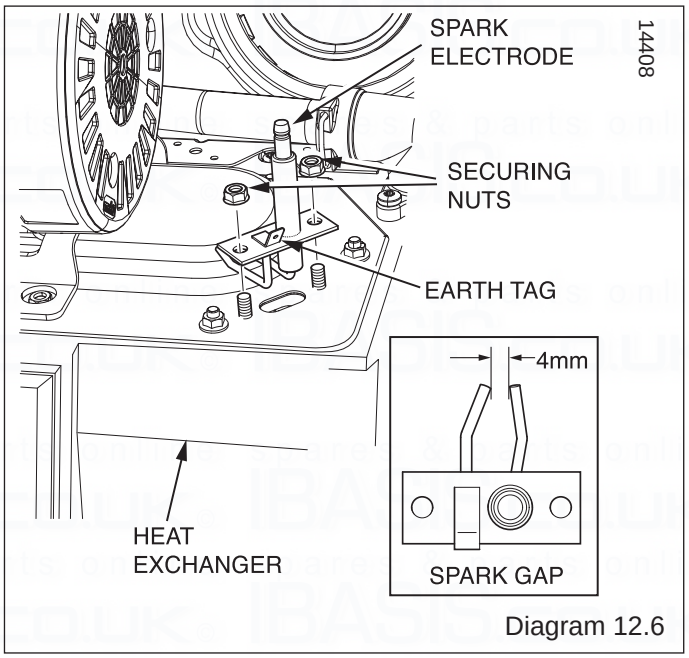

Diagram 12.6

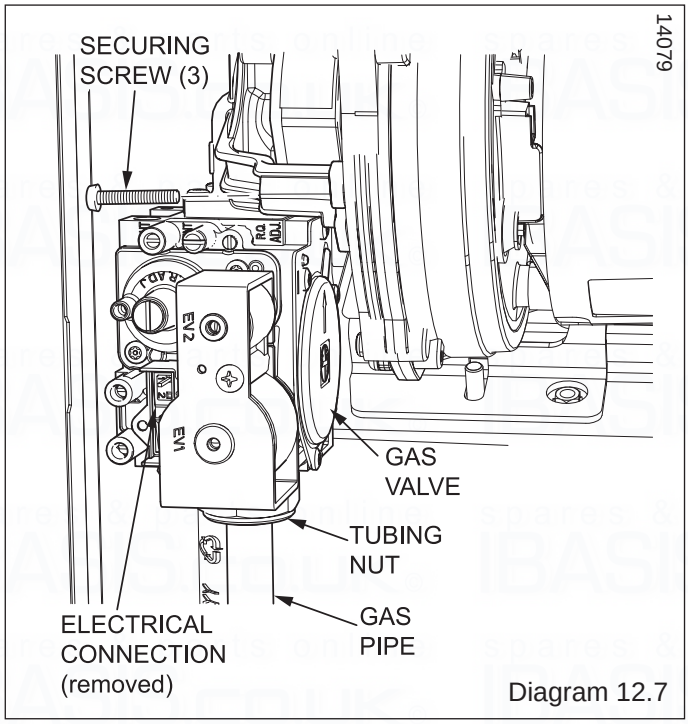

Diagram 12.7

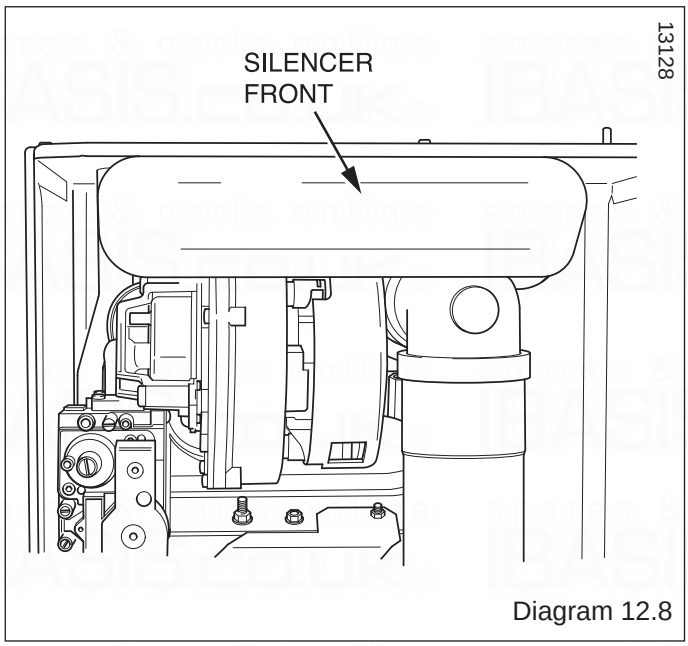

Diagram 12.8

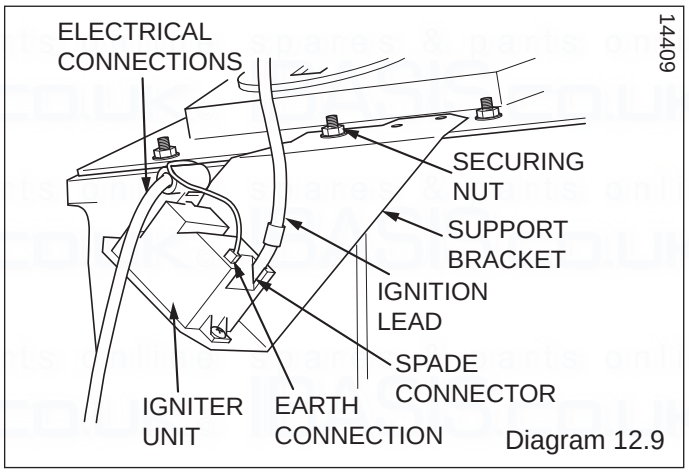

Diagram 12.9

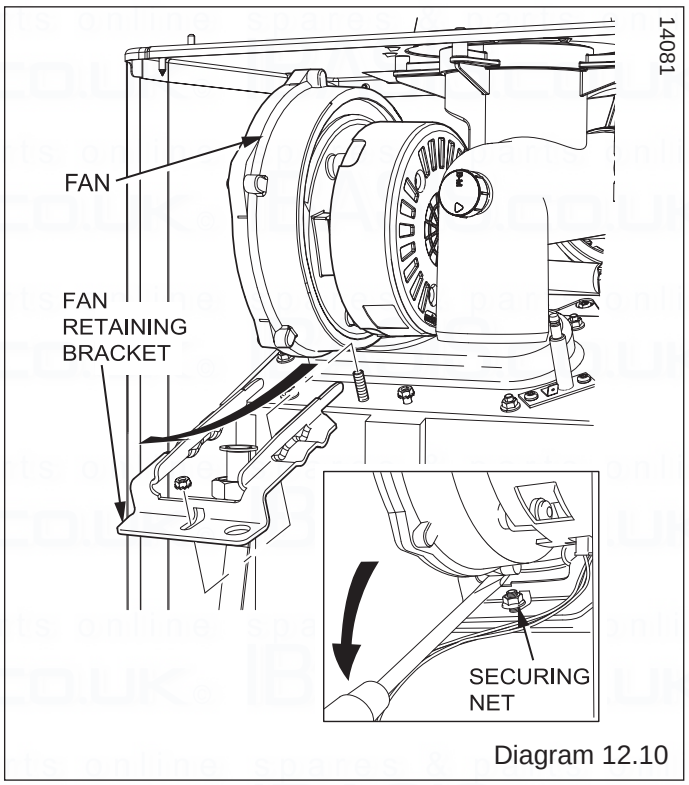

Diagram 12.10

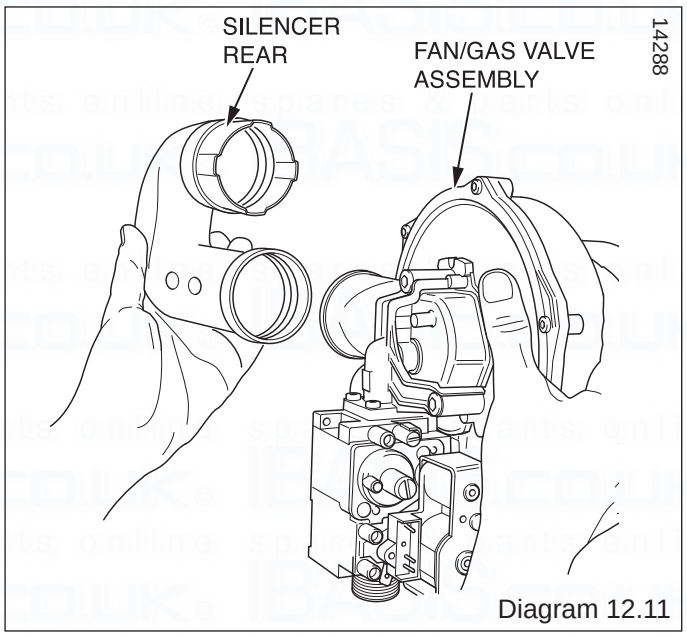

Diagram 12.11

12.6. Heat Exchanger

NOTE: If the functional checks did not indicate poor combustion then it is not necessary to service this component.

Remove loose debris from inside the heat exchanger using a soft brush and vacuum cleaner.

Carefully flush by spraying water into the heat exchanger, any remaining debris should pass through the condensate trap (Ensure the water is kept away from electrical components).

12.7 Condense Trap and Siphonic Drain

The condensate trap and siphonic drain does not normally need servicing unless material deposits exceed beyond the service fill level, see diagram 12.13.

To clean the condense trap remove the sump and rinse with water.

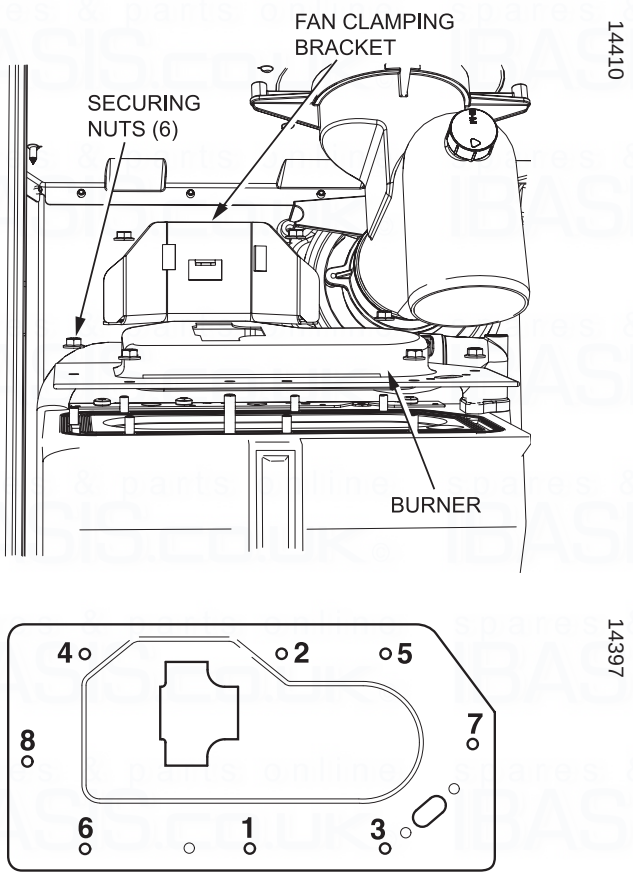

Suggested tightening sequence for burner fitting

Diagram 12.12

12.8 Casing panel seal check

NOTE: If the functional checks did not indicate poor combustion then it is not necessary to service this component.

Check the condition of the seal and replace if worn or damaged.

To replace remove the old seal and thoroughly clean the casing surfaces. Fit the new seals, these are supplied to the correct lengths and are in four pieces, for use on the sides, top and bottom.

12.9 Service Completion

Re-check the combustion as described at the beginning of this section.
On completion of the service the “Benchmark” Service Record should be completed.

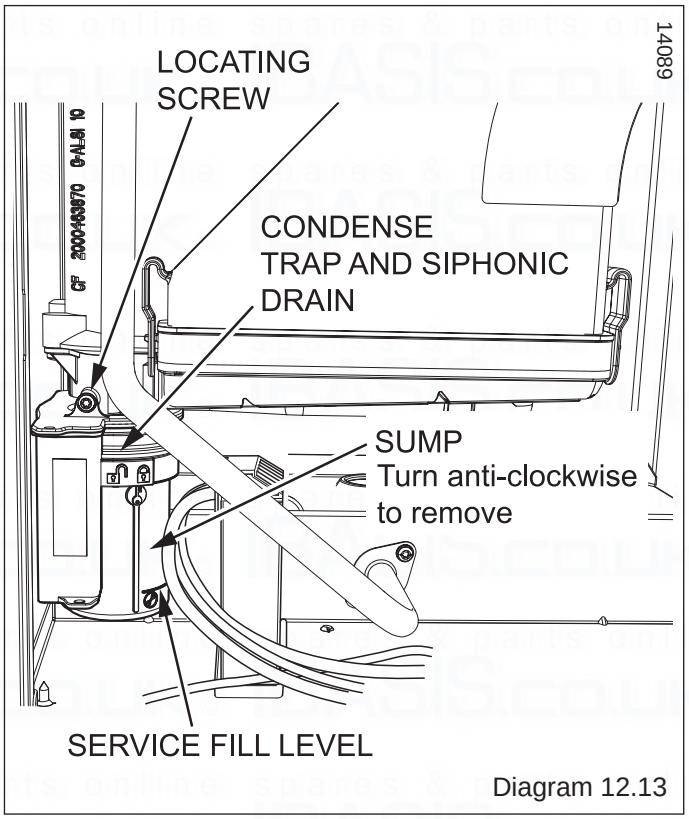

Diagram 12.13

13 Fault Finding

13.1 Preliminary fault finding

The following checks should be performed before proceeding onto specific diagnostics:

- Check the external electrical supply to the boiler is on and a supply of 230V is present at the 'L' and 'N' terminals at the installer interface.
  For access remove and open the electrical cartridge, see diagrams 10.3. and 10.1.
  Test at the 'L' and 'N' terminals on the installer interface, refer to diagrams 10.2 and 13.4.
- Check the electrical installation and appliance, carry out tests for earth continuity, polarity, short circuit and resistance to earth, using a suitable multimeter.
  An aid to test
  Remove the front casing panel, see diagram 13.1 and hinge down the control box.
  Unclip the rear cover to gain access to the main PCB.
  Carry out the tests at connector plug X17, see diagram 13.2. Check chassis earth at a bare metal point on the boiler.
- Check that there is a gas supply to the boiler and the gas service isolation valve is turned on, see diagram 8.1.
- Check pressure at the gas service isolation valve, refer to section 13.4.
- Check that the heating system pressure indicates at least 1mb, if not, fill and vent the system as described in section 13.2.
- Check that all external controls are on.

- Check the functional flow diagram, 13.5.

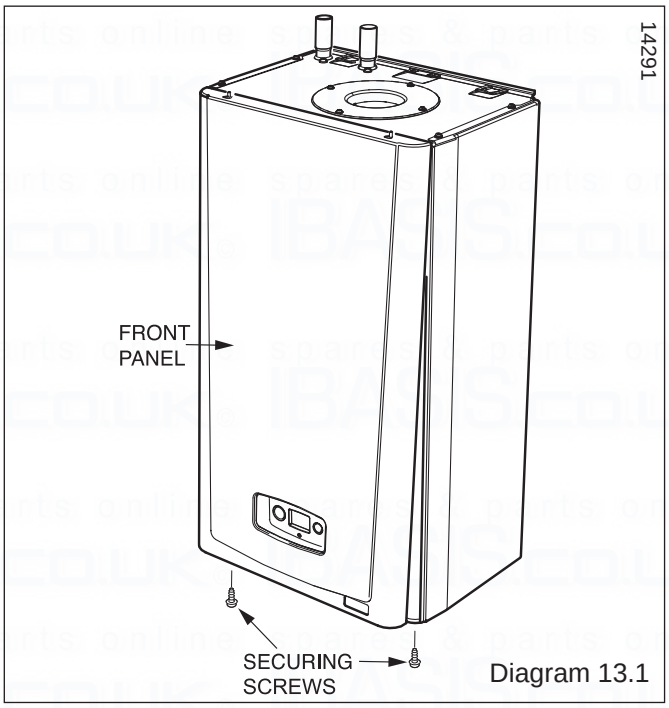

Diagram 13.1

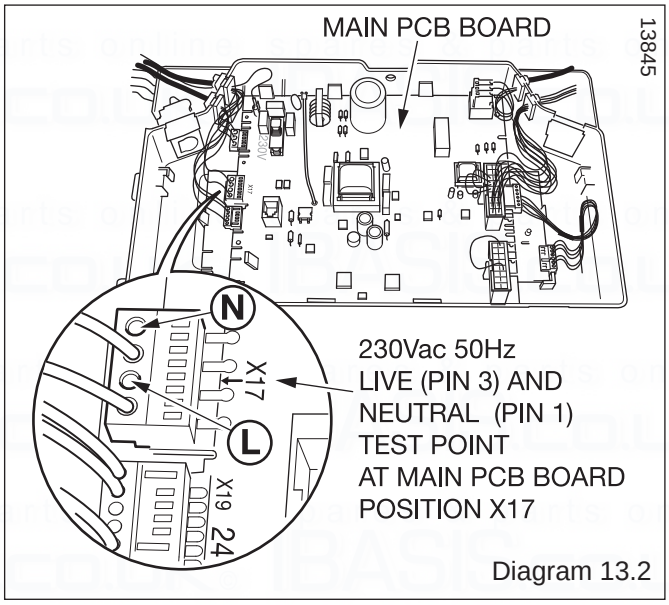

Diagram 13.2

13.2 Fault Codes

Fault codes take priority over all other display functions in the event of a fault occuring, refer to diagram 13.6.

If multiple faults occur the codes will be displayed for approx. 2 seconds, alternatively.

13.3 Fault Memory

The Fault memory stores details of the ten most recent faults.

To access this menu, refer to diagram 13.3:

a) Press and hold 'MODE' and '-' buttons for 5 seconds.

b) The display will stop flashing and alternate between the fault memory number and the fault code.

c) Press '+' button to scroll through the fault memory (Position 1 is most recent), see fault codes.

To exit this menu, press the 'MODE' button.

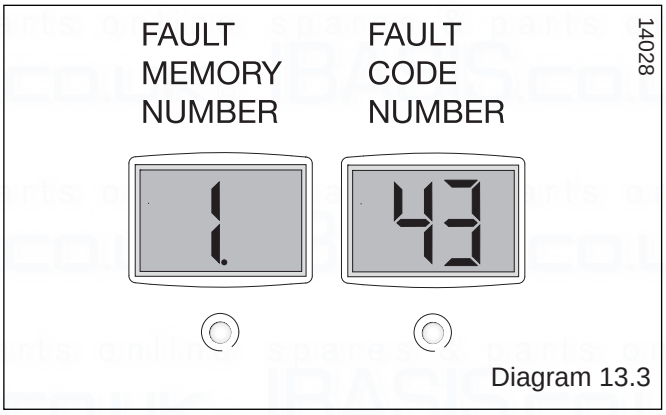

Diagram 13.3

13.4 Diagnostic Menu

The Diagnostic Menu provides the ability to view and change certain parameters. See diagram 14.8 for available parameters.

13.5 Status Codes

The status codes provide information about the current operating condition of the boiler and can be accessed through the diagnostic display, refer to diagram 13.7.

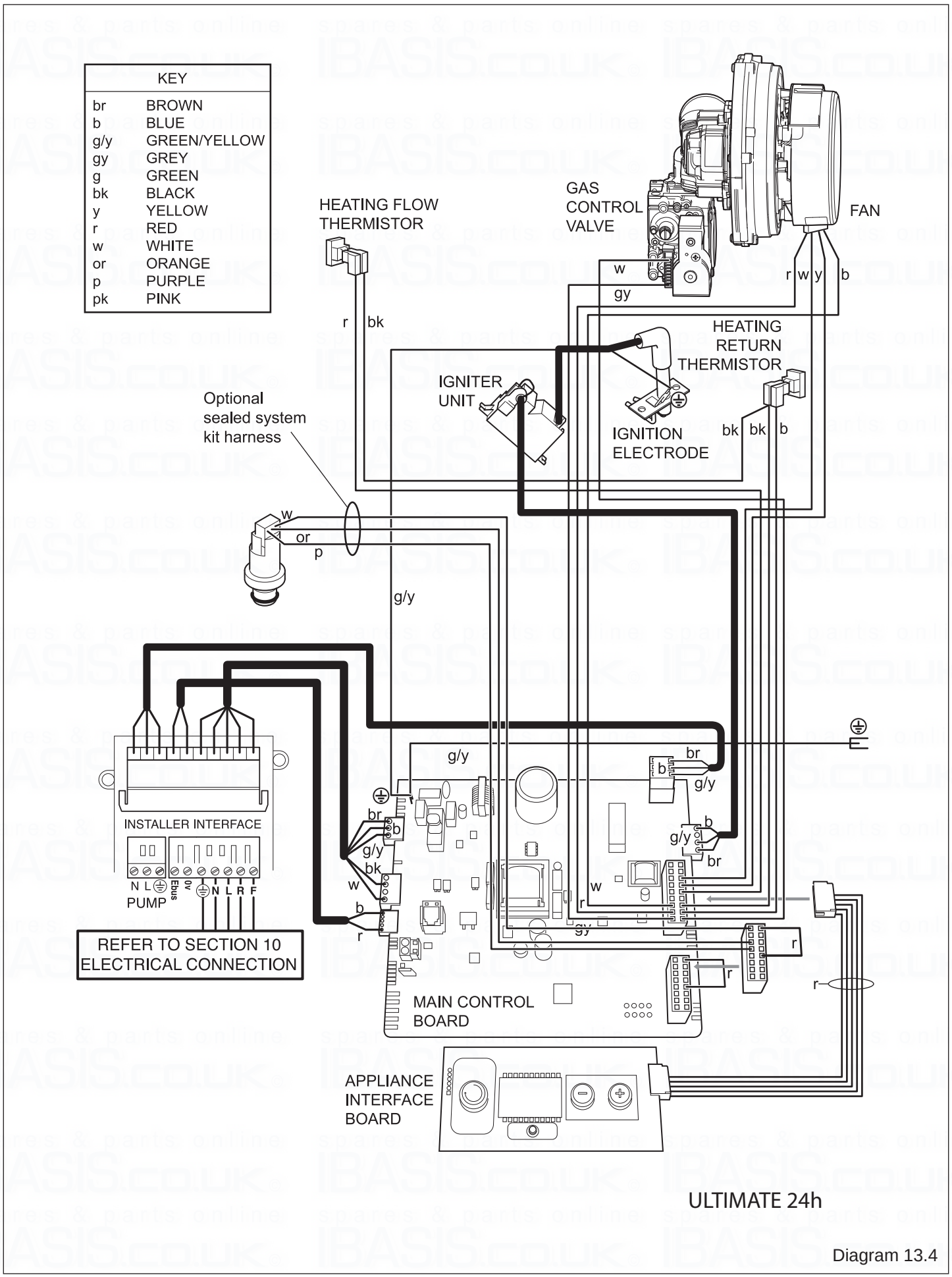
KEY
br BROWN
b BLUE
g/y GREEN/YELLOW
gy GREY
g GREEN
bk BLACK
y YELLOW
r RED
w WHITE
or ORANGE
p PURPLE
pk PINK
HEATING FLOW THERMISTOR
GAS CONTROL VALVE
FAN
HEATING RETURN THERMISTOR
IGNITER UNIT
IGNITION ELECTRODE
Optional sealed system kit harness
INSTALLER INTERFACE
N L
PUMP
Ebus
0V
N L R F
REFER TO SECTION 10 ELECTRICAL CONNECTION
MAIN CONTROL BOARD
APPLIANCE INTERFACE BOARD
ULTIMATE 24h

Diagram 13.4

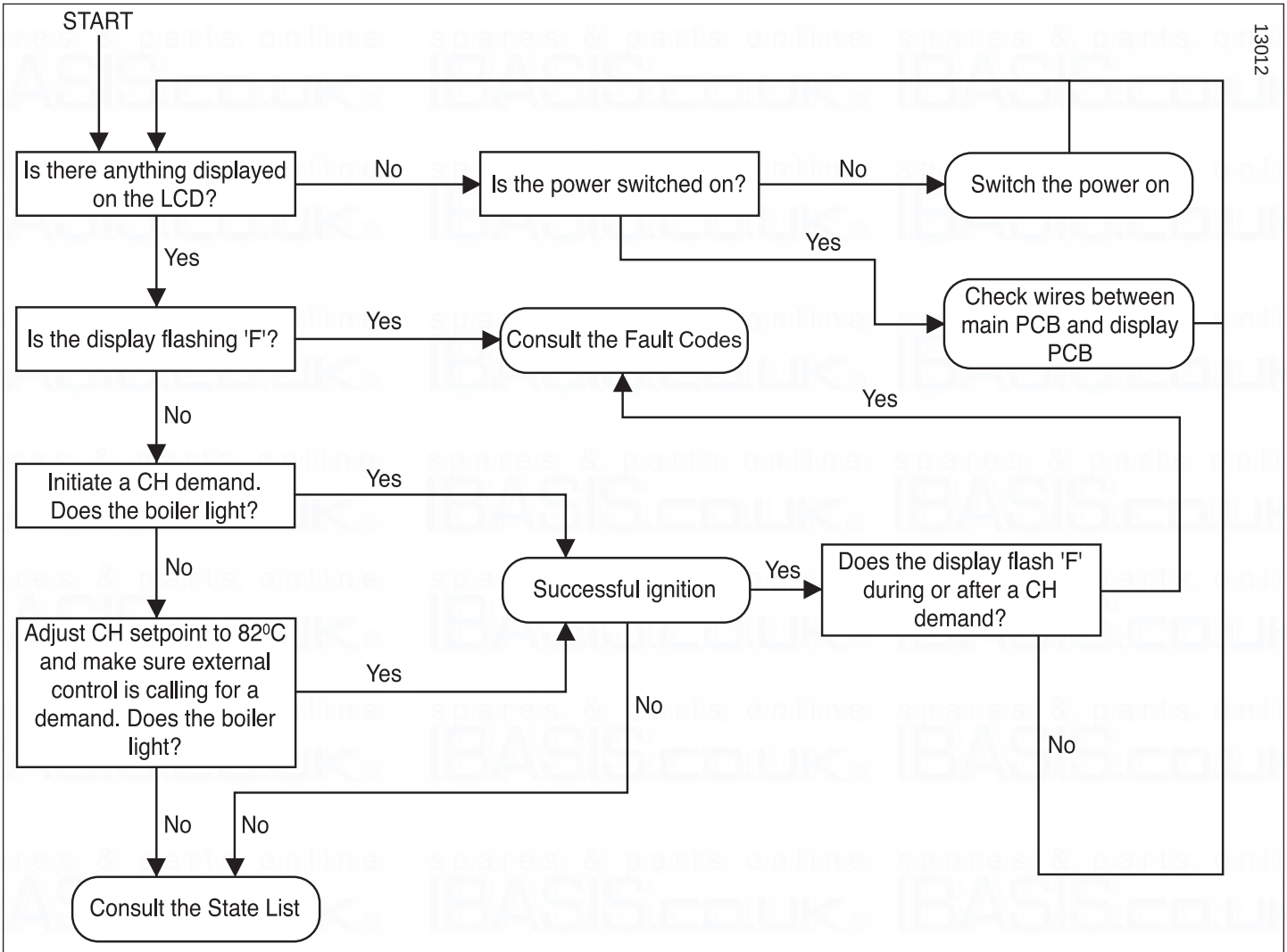

Fault Finding - Sealed System Kit (When fitted)

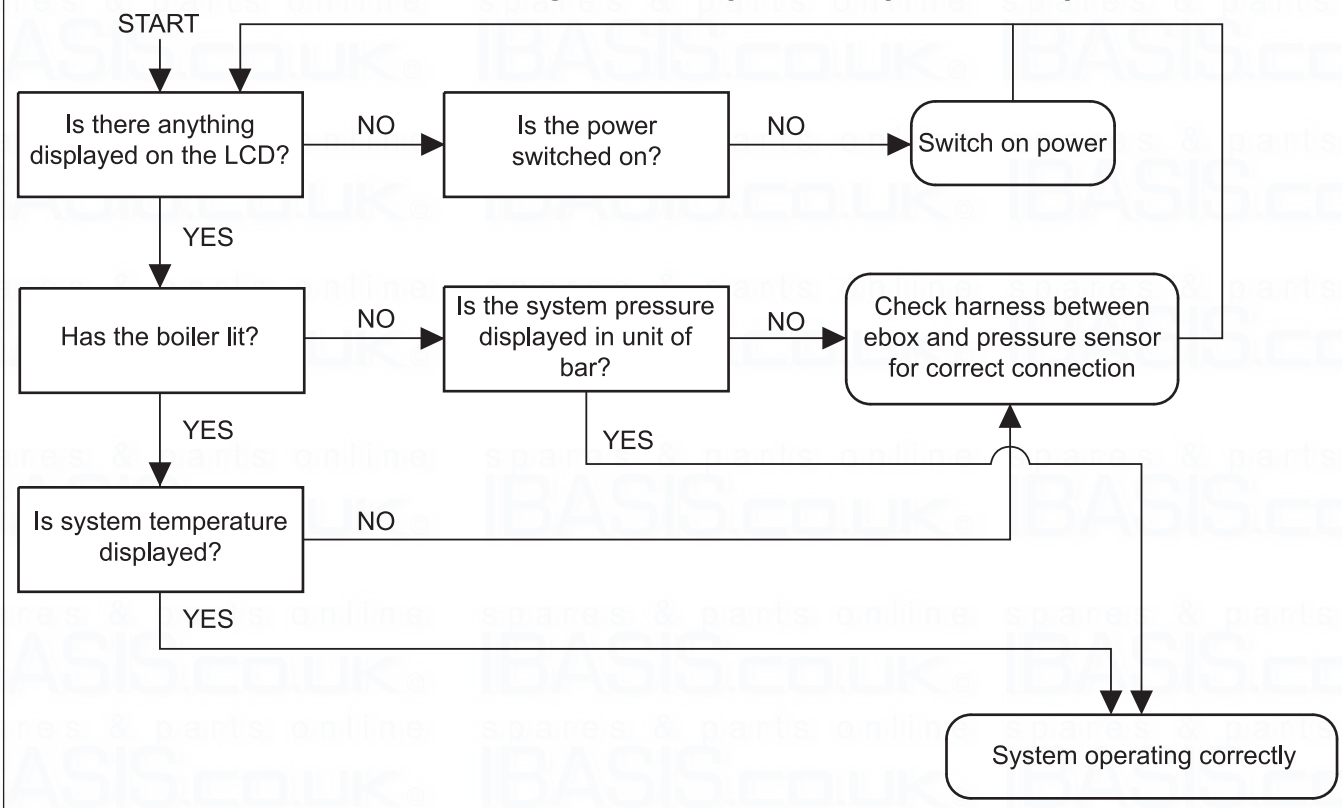

Diagram 13.5

In all circumstances press the reset button to clear the fault. If the fault persists, consult the table below.

FAULT CODES

CODE	DESCRIPTION	POSSIBLE CAUSE
F1	Boiler has attempted to light 5 times and failed on all occasions	Gas tap is closed. Gas valve connector is loose, unconnected, faulty, or wires are trapped. Ignitor connectors are loose, unconnected, faulty, trapped. Faulty Ignitor. Low gas inlet pressure. Incorrect gas valve adjustment. Electrode Ignition leads loose, unconnected, faulty, trapped. Electrode broken, defective, or position incorrect. Air inlet blocked, flue inlet blocked, flue duct leaking. Earthing connection loose, disconnected. Condensate blocked.
F3	Fan fault	Fan speed incorrect. Fan connector loose, unconnected, faulty or wires trapped. Faulty fan.
F4	Flame goes out whilst lit during a demand	Gas tap is closed. Gas valve connector is loose, unconnected, faulty, or wires are trapped. Ignitor connectors are loose, unconnected, faulty, trapped. Faulty Ignitor. Low gas inlet pressure. Incorrect gas valve adjustment. Electrode Ignition leads loose, unconnected, faulty, trapped. Electrode broken, defective, or position incorrect. Air inlet blocked, flue inlet blocked, flue duct leaking. Earthing connection loose, disconnected. Condensate blocked.
F5	Overheat	Boiler has overheated – allow to cool then press reset button
F6	CH Flow Thermistor connection fault	Thermistor wires unconnected, faulty, trapped.
F10	CH Return Thermistor connection fault	Thermistor wires unconnected, faulty, trapped.
F11	Flow and/or return NTC faulty	Thermistor wires unconnected, faulty, trapped.
F13	PCB Memory or sensing fault	Loose connections on Main PCB or display PCB. Central Heating Flow or Return Thermistor wires unconnected, faulty, trapped. Electrode Ignition leads loose, unconnected, faulty, trapped. Earthing connection loose, disconnected.
F14	Gas Valve control defective	Gas valve connector loose, wires unconnected, faulty or trapped. Faulty main board. Faulty gas valve.
F15	eBus Voltage failure	Short circuit on eBus, overload on eBus.
F22	Low Water pressure or Ignition temperature rise too slow	Not enough water in the system. CH flow or return thermistor wire loose, faulty, trapped. CH flow or return thermistor not connected to pipe correctly. Air in the system. Faulty pump or pump speed too fast.
F25	CH Flow temperature rise too high during operation. CH Return temperature rise or temperature difference too high during operation. CH Temperature difference between Flow and Return too high during operation.	Check thermistors are connected to pipes correctly. Air in the system. System is too restrictive.
F43	Generic error	Check all electrical connections - internal & external
F70	Software incompatible	Telephone Group Service
F77	Condensate pump error (Option)	Trapped, faulty wiring, blockage in condensate pump.
NO DISPLAY or 'Er' displayed - Check connection from display PCB to main PCB connector X51		

Diagram 13.6

14029

State list - To access the state lists the '-' button must be pressed for longer than 5 seconds until it begins to flash 'S' and then a number to indicate the state. The state numbers are given below.

STATE LISTS

13131

	Central heating mode	Possible Causes
S.00	no heating required	
S.01	fan pre-run	
S.02	pump pre-run	
S.03	ignition	
S.04	burner on	
S.05	pump / fan overrun	
S.06	fan overrun	
S.07	pump overrun	
S.08	Anti cycling period	

Diagram 13.7

To enter the diagnostics menu follow the procedure below:-

Press and hold the 'MODE' and '+' buttons for approx 5 seconds until the screen changes. Use the '+' or '-' button to select the number 96, this is the password. Hold the 'MODE' for approx 5 seconds when 96 is selected, when the screen changes release the button. The screen will flash between 'L1' and a number. 'L1' indicates you have level 1 access, the number indicates the diagnostic number below. Use the '+' and '-' to cycle through the selections below. To select a diagnostic number press the 'MODE' button when the correct number is selected. The display will show the parameter value of the diagnostic number selected. To return to the diagnostic number selector simply press the 'MODE' button. To change the parameter use the + or - buttons. Once the value has been changed it must be saved by holding the 'MODE' button for approximately 5 seconds. This will return to the diagnostic number selector.

DIAGNOSTIC CODES - LEVEL 1

Installer Access

14725

	Display	Description	Range
■	d.0	Heating part load	Adjustable heating part load in kW (factory setting: max. output)
■	d.1	Water pump over run time for heating mode	2 - 60 min (factory setting: 5 min)
■	d.2	Max. burner anti cycling period at 20°C Flow temperature	3 - 60 min (factory setting: 20 min)
	d.4	N/A	N/A
	d.5	Flow temperature setpoint	In °C, min. 28 and max. 82
	d.8	External controls heat demand	0= no heat request (open) 1 = heat request (closed)
	d.9	Flow target temperature from external intelligent control	In °C
	d.10	Status central heating pump	1 = on, 0 = off
	d.11	Status additional heating pump (option)	1 to 100 = on, 0 = off
	d.13	Hot water circulation pump (via accessory module)	1 to 100 = on, 0 = off
	d.23	Summer/Winter function	1 = Winter, 0 = Summer
	d.25	Hot water activation via eBUS Control	1 = yes, 0 = no
■	d.27	Option Relay 1	Reserved for future use
■	d.28	Option Relay 2	
	d.33	Fan speed target value	in rpm/10
	d.34	Fan speed actual value	in rpm/10
	d.40	Flow temperature	Actual value in °C
	d.41	Return temperature	Actual value in °C
	d.44	Ionisation current	Actual value (10nA) > 8 no flame < 4 good flame
	d.60	Number of safety temperature limiter cut offs	Quantity
	d.61	Number of lock outs	Number of unsuccessful ignitions in the last attempt
	d.64	Average ignition time	In seconds
	d.65	Maximum ignition time	In seconds
	d.67	Remaining burner anti cycling time (block time)	Minutes
	d.68	Unsuccessful ignitions in the first attempt	Quantity
	d.69	Unsuccessful ignitions in the second attempt	Quantity
	d.76	Appliance variant (device specific number)	00 to 99
	d.80	Heating operating hours	in h
	d.82	Cycles in heating mode	Quantity (in hundreds)
	d.90	Digital regulator status	1 = identified, 0 = unidentified (eBUS Address < = 10)
	d.91	Internal Programmer type (for use with Options board kit)	0:24 hour (default) 1:7 day
■	d.97	Activation of the second diagnostic level	Password needed
	d.99	State List	(see diagram 14.7)

■ Indicates read and write function - all other diagnostics are read only

Diagram 13.8

14 Replacement of Parts

14.1 General

Replacement of parts must be carried out by a **competent person** approved at the time by the Health and Safety Executive.

Replacement parts that have associated components that need replacing on removal, ie. 'O' ring seals, gasket, etc; will be supplied and should be fitted.

Before replacing any parts the boiler should be isolated from the mains electric supply and the gas should be turned off at the gas service isolation valve on the boiler, see diagram 14.1.

Ensure that components with electrical connections are disconnected before removal.

Unless stated otherwise parts are replaced in the reverse order to removal.

After replacing any parts always test for gas tightness and if necessary carry out functional test of the controls.

For replacement of parts the front casing of the boiler will need to be removed. To remove undo the two screws on the underside of the front casing and lift off.

The side panels can be removed to aid replacement of parts.

To hinge a side panel undo and remove the four screws securing each side panel to the boiler, two below and two at the top.

14.2 Igniter Unit

For access, refer to section 14.1.

Remove ignition lead and electrical connections then remove igniter unit by removing two securing screws, see diagram 12.9.

14.3 Ignition Lead

For access, refer to section 14.1.

Pull the spark plug style connector off the spark electrode and the spade connector connected to the igniter unit, see diagrams 12.6 and 12.9.

14.4 Silencer Assembly (front)

For access, refer to section 14.1.

Pull forwards to remove.

The silencer is a push fit so no tools or fixings are required for its removal or fitting, see diagram 12.8.

14.5 Gas Valve

Remove the three securing screws, holding the gas valve to the fan, see diagram 12.7.

Remove the gas valve.

After re-fitting check the combustion CO2 and adjust if necessary, refer to section 12.1, Combustion Check.

After assembly test for gas tightness and purge in accordance with the current issue of BS6891or in IE, the current edition of I.S.813 "Domestic Gas Installations".

14.6 Flue Hood

For access, refer to section 14.1.

Pull the flue hood securing clips away from the flue hood sump and push flue hood up slightly towards flue hood top, see diagram 12.5.

To remove swivel flue hood 90^0 and pull down and out towards front of boiler.

14.7 Fan/Gas valve assembly

For access, refer to section 14.1.

Undo the tubing nut to remove the gas valve from the gas pipe and any electrical connections, see diagram 12.7.

Remove the securing nut holding the fan retaining bracket, press down on burner to ease removal of securing nut. Slide out the fan retaining bracket.

Lift front of bracket away from stud and pull forward to release the fan, see diagram 12.10.

Lift fan/gas valve assembly up and forward away from locating studs.

Remove fan gasket and replace.

To replace the fan and retaining bracket correctly, insert into slots on fan clamping bracket and locate onto lugs on the burner, see diagram 12.10.

14.8 Silencer assembly (rear)

For access, refer to section 14.1.
Remove the fan/gas valve assembly, see section 14.7.
Pull Silencer rear away from fan/gas valve assembly.
The rear silencer is a push fit so no tools or fixings are required for its removal or fitting, see diagram 12.11.

14.9 Spark Electrode

For access, refer to section 14.1.

Remove the spark plug lead and earth lead.

Remove the two securing nuts.

Withdraw the spark electrode by slowly pulling up and leaning it forward towards the centre of the heat exchanger to ensure that the electrode does not foul on the hole in the burner casing.

Check spark gap, see diagram 12.6.

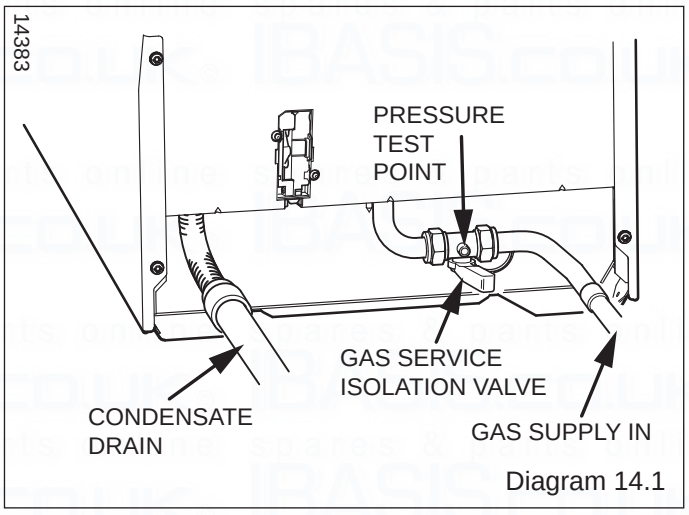

Diagram 14.1

14.10 Burner

For access, refer to section 14.1.

Remove igniter unit, flue hood, fan and gas valve assembly and spark electrode lead, refer to relevant sections.

Remove the flanged nuts and studs that secure the burner, note that two studs at the rear also hold the fan clamping bracket, see diagram 12.10.

NOTE: The burner gasket should be inspected but will not need replacing unless there are signs of wear or damage.

IMPORTANT: Do not allow fixings, nuts, screws, etc. to fall into the open flue hood sump, use a temporary cover whilst removing any parts.

14.11 Condensate Trap

For access, refer to section 14.1.
Remove securing screw, see diagram 12.13.
Disconnect the flexible condense drain pipe from the external plastic drain pipe beneath the boiler.
Carefully pull the condensate trap down and forward so as not to spill its contents. The trap shoud be removed complete with the sealing grommet and flexible condensate drain pipe.

14.12 Heating Flow Thermistor

For access refer to section 14.1
Remove the silencer front, fan/gas valve assembly and flue hood for access. See relevant sections.
Refer to diagram 14.2.

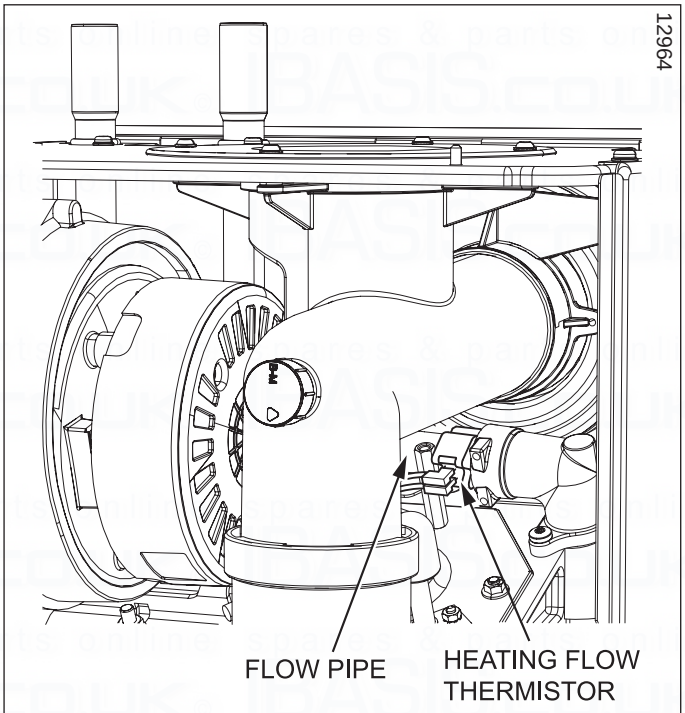

Diagram 14.2

14.13 Heating Return Thermistor

For access, refer to section 14.1.
Refer to diagram 14.3.
Remove the electrical connections from the thermistor.
Remove the retaining clip from the return pipe.
Remove the thermistor from the retaining clip.
Note that the polarity of the wiring to thermistor is unimportant.

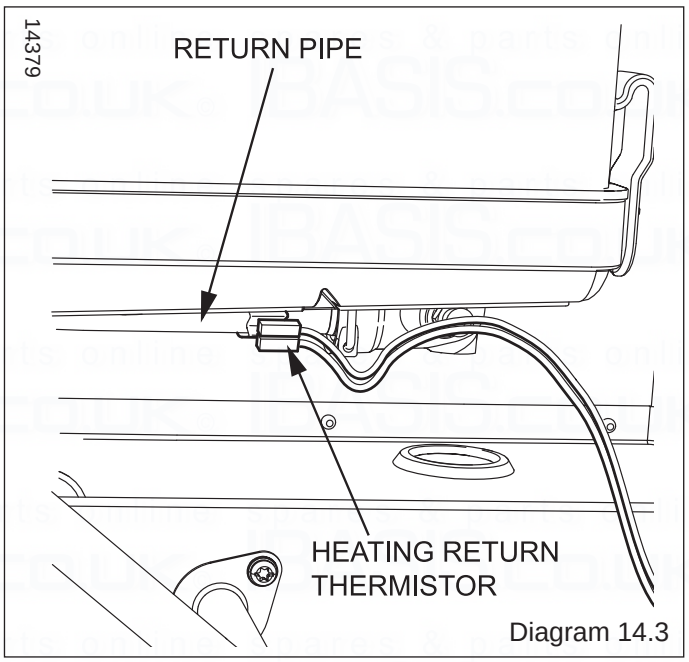

Diagram 14.3

14.14 Heat Exchanger

For access, refer to section 14.1.
Drain down the boiler heating circuit

Remove the silencer front

Pull forwards to remove.

The silencer is a push fit so no tools or fixings are required for its removal or fitting, see diagram 12.8.

Remove the flue hood front

Ease the securing clips away from the sump to release the retaining catch then push the flue hood up to disengage from the sump, see diagram 12.5.

To remove, swivel flue hood 90° and pull down and out, see diagram 12.5.

Remove the igniter unit with support bracket

Disconnect the electrical connections and ignition lead.

Release the igniter unit support bracket.

Remove the igniter unit assembly, see diagram 12.9.

Remove the gas valve/fan

Disconnect the tubing nut at the gas valve, see diagram 12.7.

Remove the fan retaining bracket, see diagram 12.10.

To ease removal of the securing nut from the fan retaining bracket, a flat bladed screwdriver can be used in the position shown and gently levered down as indicated.

Remove the spark electrode plug and earth connection.

Remove the fan and gas valve electrical connections.

Remove the fan and gas valve assembly.

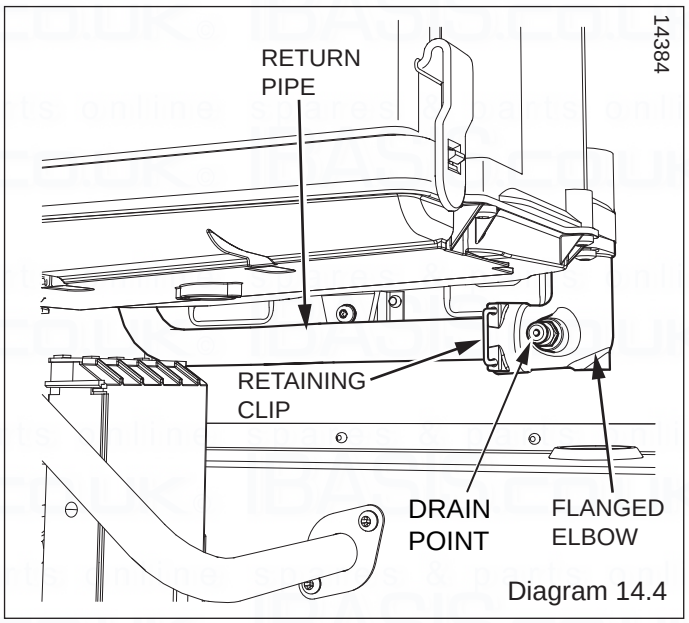

Diagram 14.4

Remove the condensate trap

Remove the drain outlet pipe from the base of the trap, see diagram 15.1. Remove the condensate drain securing screw and carefully pull the trap forward, see diagram 12.13.

Drain the heat exchanger

Drain the heat exchanger using the drain point on the right hand side of the heat exchanger, see diagram 14.4.

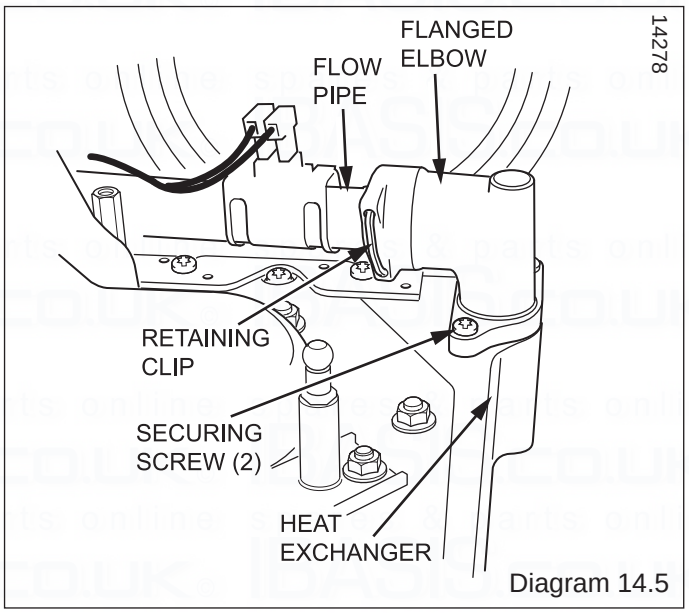

Diagram 14.5

Remove the heat exchanger

Undo the screws securing the flanged elbow on the top right hand side of the heat exchanger and remove the retaining clip from the flanged elbow, see diagram 14 5.

Remove retaining clip from the flanged elbow on the bottom of the heat exchanger, see diagram 14.4.

Remove screws securing the heat exchanger, one on top and one underneath the heat exchanger, see diagram 14.6.

Lift up heat exchanger slightly to disengage it from its hanging bracket.

Remove the heat exchanger by pulling forward, then pulling to the right to disengage the return pipe and tilting backwards to ease removal complete with sump. Discard the heat exchanger and flanged elbows.

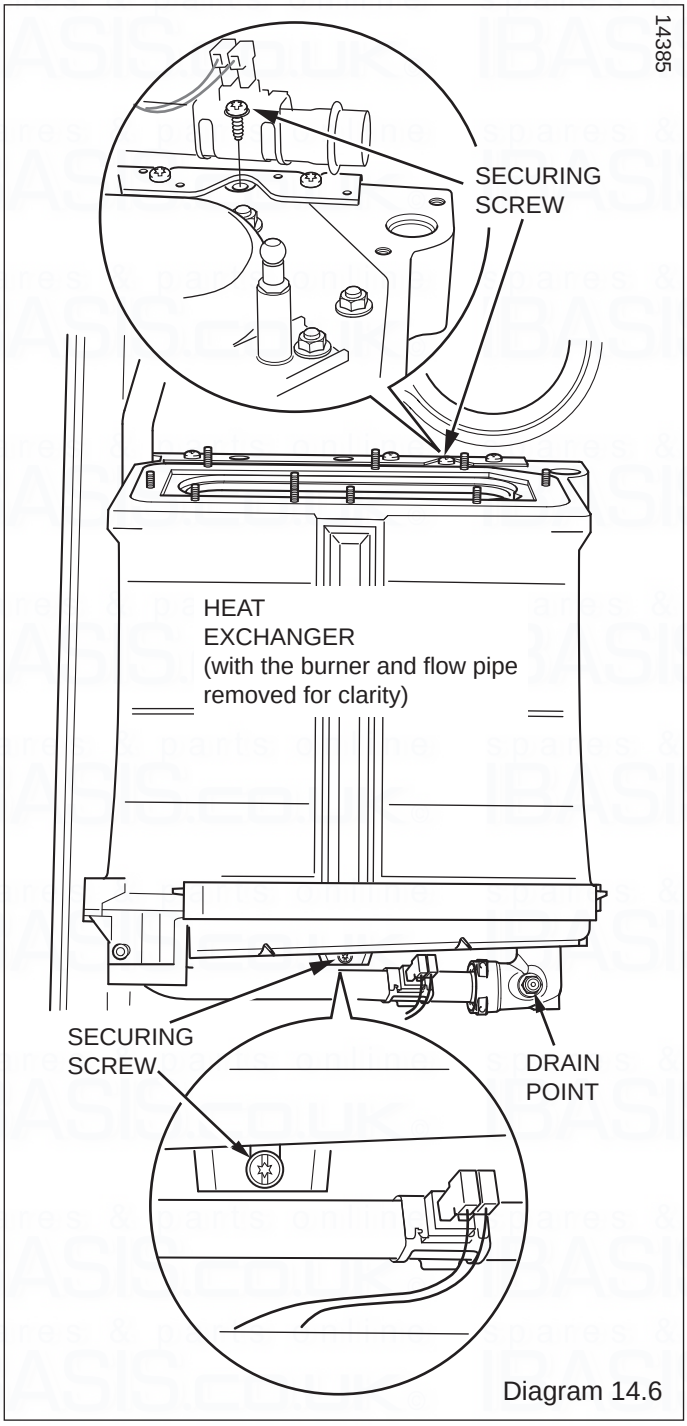

Diagram 14.6

Remove the burner

Remove the six flanged nuts and two studs that secure the burner, note that the two studs also hold the fan clamping bracket, see diagram 14.7.

Taking great care not to damage the surface of the burner.

NOTE: Replace the burner gasket and follow the tightening sequence when re-fitting the burner, see diagram 14.7.

NOTE: Fit all replacement gaskets and seals when re-fitting parts.

Refer to Section 11.

Fill the boiler heating system.

Re-pressurise (sealed sysem only)

Check for any leaks.

Vent all air from the system.

Test for gas tightness, earth continuity, polarity, short circuit and resistance to earth.

Light the boiler and carry out functional checks.

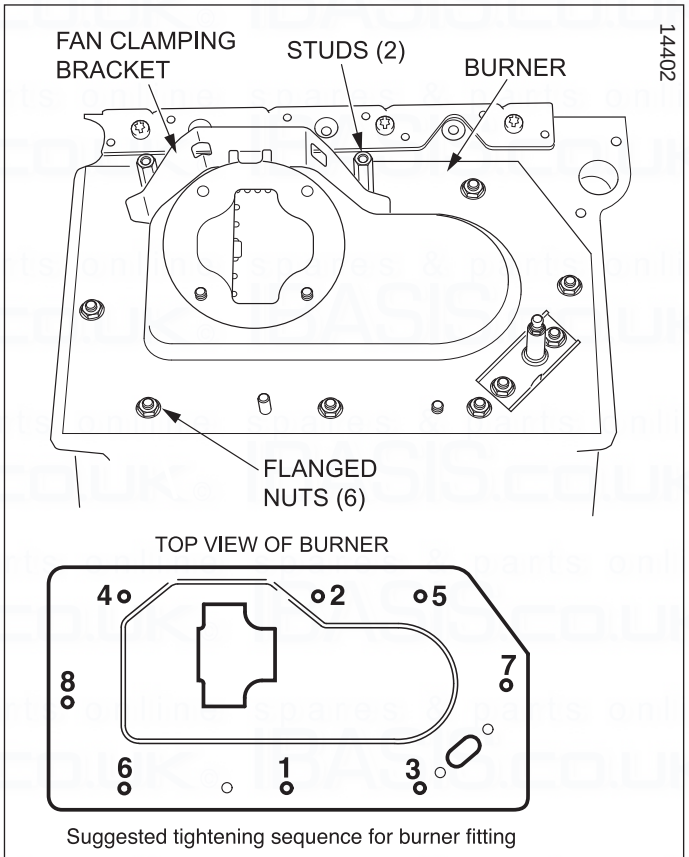

Diagram 14.7

14.15 Casing Seal

Refer to Section 12.8.

14.16 Access to User interface and Main PCB

For access, refer to section 14.1.

Hinge down the control box and unclip the rear cover to gain access.

Remove electrical connections from main PCB noting their positions for replacement.

Unclip main PCB and remove, see diagram 14.8.

Unclip user interface and remove.

For replacement, see diagram 14.9 and ensure that the user interface connection cable is refitted.

NOTE: When re-fitting any of the control boards make sure you support the control box to avoid straining hinges as you push down and clip back into place.

14.17 Control Box

For access, refer to section 14.1.

Hinge down the control box and unclip the rear cover to gain access.

Remove relevant electrical connections from main PCB and grommets from the control box.

MPORTANT: Support the control box whilst undoing the hinges.

Remove the hinge securing screws accessed from beneath the boiler and remove the control box, see diagram 14.10.

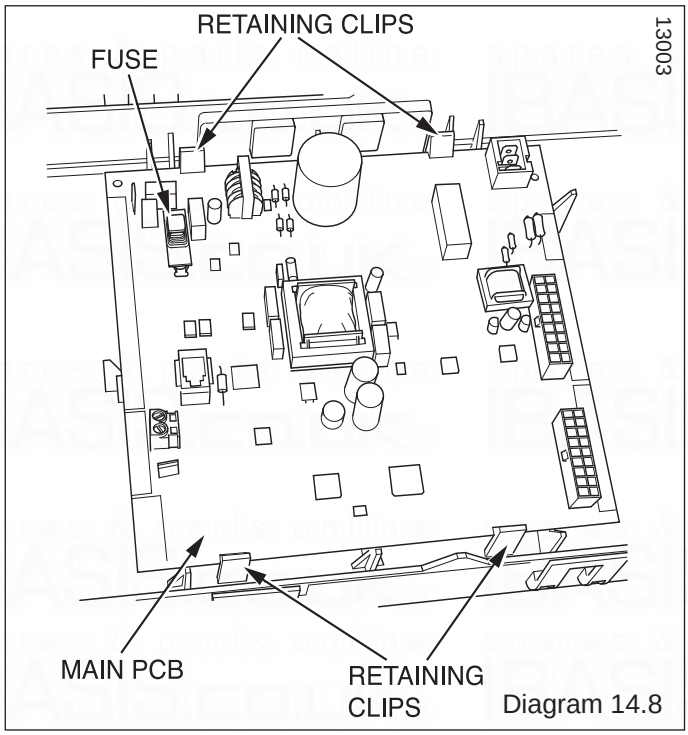

Diagram 14.8

14.18 Fuse - Main PCB - Control Box

For access, refer to section 14.16.

The fuse is located at the top left hand corner of the main PCB, see diagram 14.8.

14.19 Installer Interface Electrical Cartridge

Remove the Installer Interface securing screw accessed from beneath the boiler.

Carefully pull down the electrical cartridge, disconnect the cables.

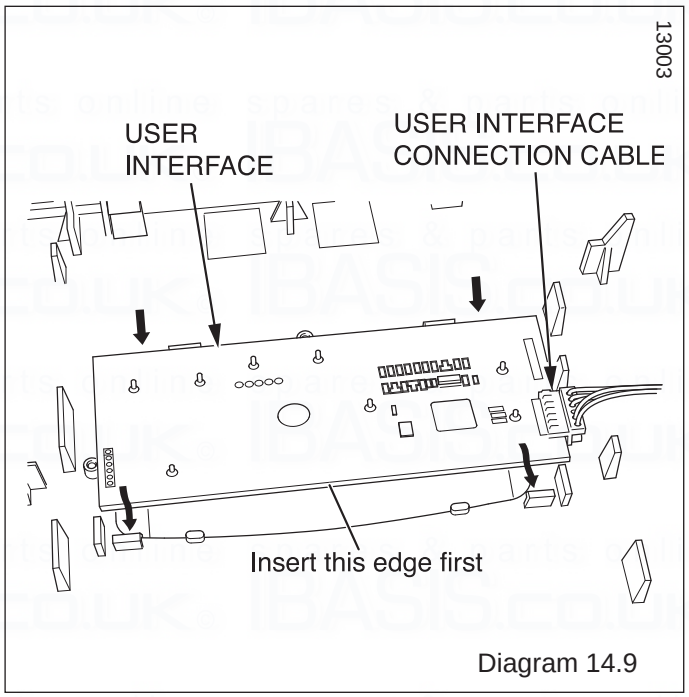

Diagram 14.9

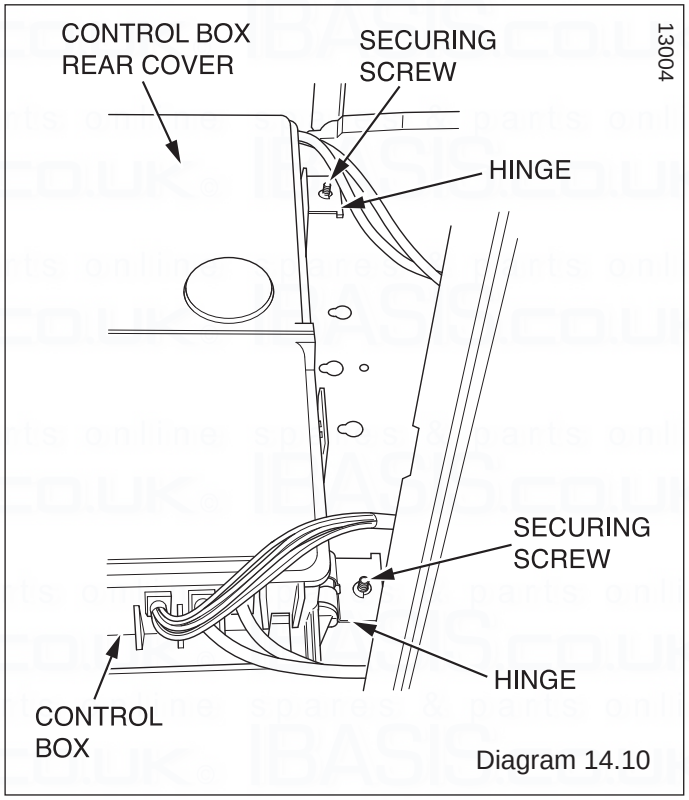

Diagram 14.10

15 Spare Parts

Key No.	Part No.	Description	GC No
1	0020020734	Fan	H42723
2	0020020763	Igniter unit	H42773
3	0020020781	Heating flow & return thermistor (2)	H42792
4	0020020735	Gas valve 24h	H42724
5	0020020731	Spark Electrode	H42720
6	0020020728	Burner 24h	H42718
7	0020023826	User interface	H42784
8	0020023825	Main P.C.B.	H42783

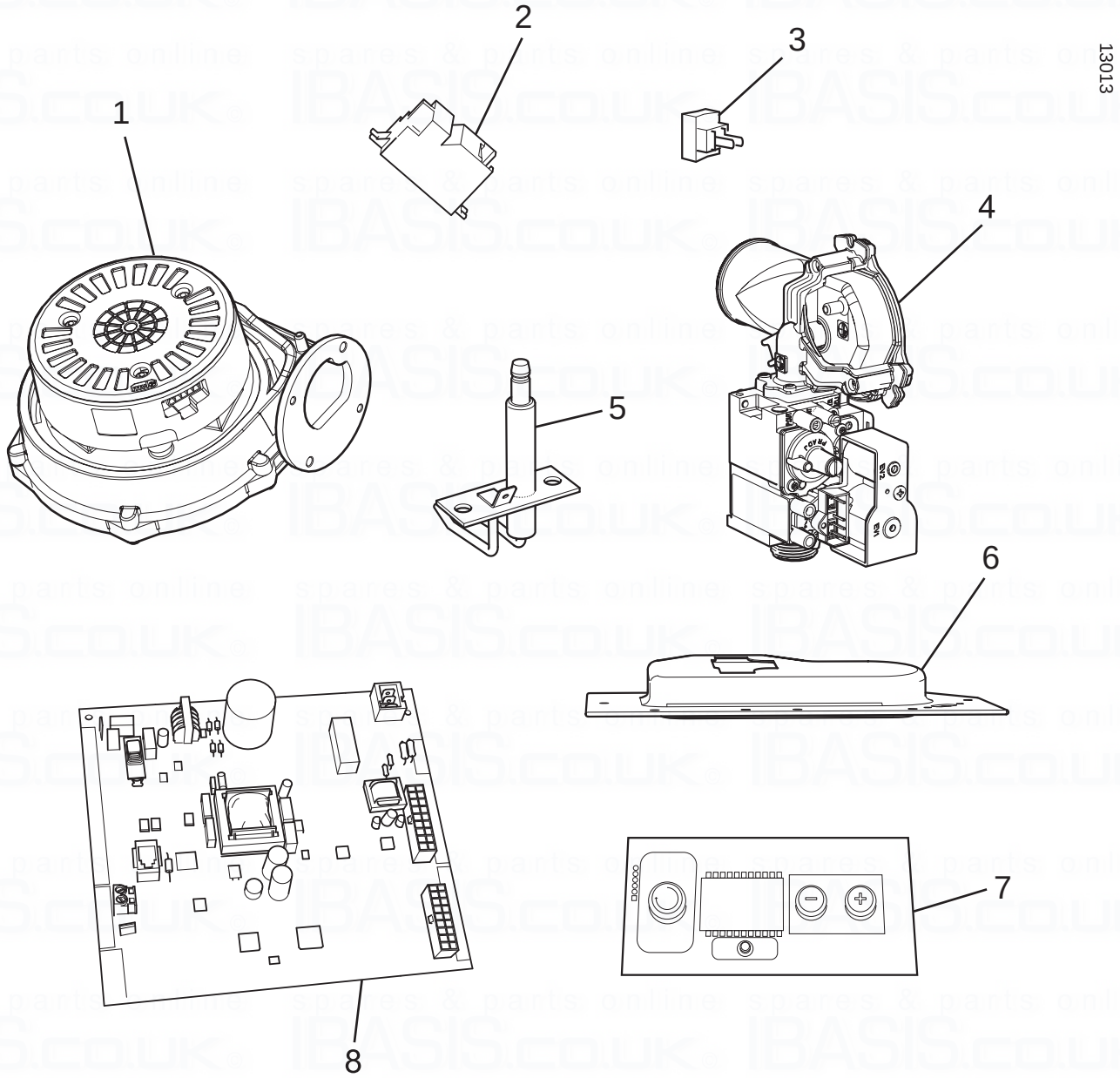

Diagram 15.1

16 Manual handling

IMPORTANT. With regards to the Manual Handling Operations, 1992 Regulations, the following lift operation exceeds the recommended weight for a one man lift.

General recommendations when handling

Clear the route before attempting the lift.
Ensure safe lifting techniques are used – keep back straight – bend using legs. Keep load as close to body as possible. Do not twist – reposition feet instead. If 2 persons performing lift, ensure co-ordinated movements during lift. Avoid upper body/top heavy bending - do not lean forward/sideways. Recommend wear suitable cut resistant gloves with good grip to protect against sharp edges and ensure good grip. Always use assistance if required.

Removal of carton from delivery van

Recommend 2 person lift or 1 person with use of sack truck. If 1 person is performing lift, straddle the load, tilt and place carton into position on truck. Recommend secure appliance onto truck with suitable straps. Ensure safe lifting techniques are used – keep back straight – bend using legs. Keep load as close to body as possible. If 2 persons performing lift, ensure co-ordinated movements during lift. Always use assistance if required.

Carriage of carton from point of delivery to point of installation – ground floor.

Recommend 2 person lift or 1 person with use of sack truck. If 1 person is performing lift, straddle the load, tilt and place carton into position on truck. Recommend secure appliance onto truck with suitable straps. Ensure safe lifting techniques are used – keep back straight – bend using legs. Keep load as close to body as possible. If 2 persons performing lift, ensure co-ordinated movements during lift. Clear the route before attempting the lift. If removing boiler from truck straddle the load and tilt forwards to facilitate secure grip. Ensure safe lifting techniques are used – keep back straight – bend using legs. Do not twist – reposition feet instead. Take care to avoid trip hazards, slippery or wet surfaces and when climbing steps and stairs. Always use assistance if required.

Carriage of carton from point of delivery to point of installation – first or higher floor, cellar.

Recommend 2-person lift or 1 person with use of sack truck. If 1 person is performing lift, straddle the load, tilt and place carton into position on truck. Recommend secure appliance onto truck with suitable straps. Ensure safe lifting techniques are used – keep back straight – bend using legs. Keep load as close to body as possible. If 2 persons performing lift, ensure co-ordinated movements during lift. Avoid upper body/top heavy bending - do not lean forward/sideways. Clear the route before attempting the lift. If removing boiler from truck straddle the load and tilt forwards to facilitate secure grip. Ensure safe lifting techniques are used – keep back straight – bend using legs. Do not twist – reposition feet instead. Take care to avoid trip hazards, slippery or wet surfaces and when climbing steps and stairs. Always use assistance if required.

Carriage of carton from point of delivery to point of installation – roofspace.

Recommend 2-person lift. Ensure co-ordinated movements during lift. Avoid upper body/top heavy bending - do not lean forward/sideways. Clear the route before attempting the lift. Take care to avoid trip hazards, slippery or wet surfaces and when climbing steps and stairs. When transferring appliance into roofspace, recommend 1 person to be in roofspace to receive the appliance and other person to be below to pass up and support appliance. Ensure safe lifting techniques are used – keep back straight – bend using legs. Keep load as close to body as possible. Always use assistance if required. It is assumed safe access, flooring and adequate lighting are provided in the roof space. It is recommended a risk assessment of the roof space area be carried out before moving the appliance into the area to take into account access, stability of flooring, lighting and other factors, and appropriate measures taken.

Unpacking of appliance from carton.

Recommend 2 persons unpack appliance from carton. Always keep working area clear. Recommend cut base end of carton and open carton flaps, then tilt boiler forwards from its side onto its base and remove carton by sliding up over the boiler. Ensure safe lifting techniques are used – keep back straight – bend using legs. Keep load as close to body as possible. Always use assistance if required. Dispose of packaging in a responsible manner. Recommend wear suitable cut resistant gloves with good grip to protect against sharp edges and ensure good grip when handling appliance outside packaging.

Positioning of Appliance for Final Installation – no obstructions.

This appliance is deemed to be a one person lift when removed from the carton. Fit bracket securely onto wall before lifting appliance into position. Obtain firm grip on front and sides of appliance, lift upwards, ensure stable balance achieved and lift upwards to position in place on bracket. Ensure safe lifting techniques are used – keep back straight – bend using legs - when lifting load from floor level. Do not twist – reposition feet instead. Keep boiler as close as possible to body throughout lift to minimise strain on back. Ensure co-ordinated movements to ensure equal spread of weight of load. Always use assistance if required. Recommend wear suitable cut resistant gloves with good grip to protect against sharp edges and ensure good grip when handling appliance.

Positioning of Appliance for Final Installation – above worktop, foreseeable obstructions etc.

This appliance is deemed to be a one person lift when removed from the carton. Fit bracket securely onto wall before lifting appliance into position. Obtain firm grip on front and sides of appliance, lift upwards, onto worktop if practicable. Ensure stable balance achieved and lift upwards to position in place on bracket. If 2 persons positioning onto bracket obtain firm grip at front and sides/base of boiler. Ensure co-ordinated movements during 2 person lifts to ensure equal spread of weight of load. Ensure safe lifting techniques are used – keep back straight – bend using legs - when lifting load from floor level. Do not twist – reposition feet instead. Keep boiler as close as possible to body throughout lift to minimise strain on back. Avoid upper body/top heavy bending - do not lean forward/sideways. Always use assistance if required. Recommend wear suitable cut resistant gloves with good grip to protect against sharp edges and ensure good grip when handling appliance.

Positioning of Appliance for Final Installation – within compartment etc. restricting installation.

This appliance is deemed to be a one person lift when removed from the carton. Fit bracket securely onto wall before lifting appliance into position. Obtain firm grip on front and sides of appliance, lift upwards, onto worktop if practicable. Ensure stable balance achieved and lift upwards to drop into place onto bracket. If 2 persons positioning onto bracket obtain firm grip at front and sides/base of boiler. Ensure co-ordinated movements during 2 person lifts to ensure equal spread of weight of load. If 1 person positioning onto bracket recommend obtain firm grip supporting base of boiler. Ensure safe lifting techniques are used – keep back straight – bend using legs - when lifting load from floor level. Do not twist – reposition feet instead. Keep boiler as close as possible to body throughout lift to minimise strain on back. Always use assistance if required. Recommend wear suitable cut resistant gloves with good grip to protect against sharp edges and ensure good grip when handling appliance.

Positioning of Appliance for Final Installation – in roof space restricting installation.

This appliance is deemed to be a one person lift when removed from the carton. Obtain firm grip on front and sides of appliance, lift upwards, ensure stable balance achieved and lift upwards to drop into place onto bracket. If 2 persons positioning onto bracket obtain firm grip at front and sides/base of boiler. Ensure co-ordinated movements during 2 person lifts to ensure equal spread of weight of load. If 1 person positioning onto bracket recommend obtain firm grip supporting base of boiler. Ensure safe lifting techniques are used - keep back straight – bend using legs - when lifting load from floor level. Do not twist – reposition feet instead. Keep boiler as close as possible to body throughout lift to minimise strain on back. Always use assistance if required. Recommend wear suitable cut resistant gloves with good grip to protect against sharp edges and ensure good grip when handling appliance. It is recommended a risk assessment of the roof space area be carried out before moving the appliance into the area to take into account access, stability of flooring, lighting and other factors, and appropriate measures taken.

BENCHMARK LOG BOOK
SERIAL NUMBER Model Name

Please affix the label positioned on the top panel of your boiler over this area.

PEEL OFF

COMMISSIONING CHECKLIST
GAS BOILER SYSTEM

This Commissioning Checklist is to be completed in full by the competent person who commissioned the boiler as a means of demonstrating compliance with the appropriate Building Regulations and then handed to the customer to keep for future reference.

Failure to install and commission this equipment to the manufacturer's instructions will invalidate the warranty but does not affect statutory rights.

Customer Name _____ Telephone Number _____

Address _____

Commissioned by *(print name)* _____ Engineer ID Number _____

Company Name _____ Telephone Number _____

Company Address _____

_____ Commissioning Date _____

To be completed by the customer on receipt of a Building Regulations Compliance Certificate *:

Building Regulations Notification Number *(if applicable)*

CONTROLS Tick the appropriate boxes

Time and Temperature Control to Heating	Room Thermostat and Programmer/Timer ☐	Programmable Room Thermostat ☐	Load/Weather Compensation ☐	Optimum Start Control ☐
Time and Temperature Control to Hot Water			Cylinder Thermostat and Programmer/Timer ☐	Combination Boiler ☐
Heating Zone Valves			Fitted ☐	Not Required ☐
Hot Water Zone Valves			Fitted ☐	Not Required ☐
Thermostatic Radiator Valves			Fitted ☐	Not Required ☐
Automatic Bypass to System			Fitted ☐	Not Required ☐
Boiler Interlock				Provided ☐

ALL SYSTEMS

The system has been flushed and cleaned in accordance with BS7593 and boiler manufacturer's instructions Yes ☐

What system cleaner was used?

What inhibitor was used? Quantity _____ *litres*

CENTRAL HEATING MODE Measure and Record:

Gas Rate _____ m^3/hr OR _____ ft^3/hr

Burner Operating Pressure (if applicable) _____ mbar OR Gas Inlet Pressure _____ mbar

Central Heating Flow Temperature _____ °C

Central Heating Return Temperature _____ °C

COMBINATION BOILERS ONLY

Is the installation in a hard water area (above 200ppm)? Yes ☐ No ☐

If yes, has a water scale reducer been fitted? Yes ☐ No ☐

What type of scale reducer has been fitted?

DOMESTIC HOT WATER MODE Measure and Record:

Gas Rate _____ m^3/hr OR _____ ft^3/hr

Burner Operating Pressure (at maximum rate) _____ mbar OR Gas Inlet Pressure (at maximum rate) _____ mbar

Cold Water Inlet Temperature _____ °C

Hot water has been checked at all outlets Yes ☐ Temperature _____ °C

Water Flow Rate _____ *l/min*

CONDENSING BOILERS ONLY

The condensate drain has been installed in accordance with the manufacturer's instructions and/or BS5546/BS6798 Yes ☐

ALL INSTALLATIONS

If required by the manufacturer, record the following CO_2 _____ % OR CO _____ *ppm* OR CO/CO_2 Ratio _____

The heating and hot water system complies with the appropriate Building Regulations Yes ☐

The boiler and associated products have been installed and commissioned in accordance with the manufacturer's instructions Yes ☐

The operation of the boiler and system controls have been demonstrated to and understood by the customer Yes ☐

The manufacturer's literature, including Benchmark Checklist and Service Record, has been explained and left with the customer Yes ☐

Commissioning Engineer's Signature

Customer's Signature

(To confirm satisfactory demonstration and receipt of manufacturer's literature)

*All installations in England and Wales must be notified to Local Authority Building Control (LABC) either directly or through a Competent Persons Scheme. A Building Regulations Compliance Certificate will then be issued to the customer.

©Heating and Hotwater Industry Council (HHIC)

benchmark COLLECTIVE MARK
THE MARK OF QUALITY FOR THE INSTALLATION, COMMISSIONING AND SERVICING OF DOMESTIC HEATING AND HOT WATER SYSTEMS

www.centralheating.co.uk

SERVICE INTERVAL RECORD

It is recommended that your heating system is serviced regularly
and that you complete the appropriate Service Interval Record Below .

Service Provider. Before completing the appropriate Service Interval Record below, please ensure you have carried out the service as described in the boiler manufacturer's instructions. Always use the manufacturer's specified spare part when replacing all controls.

SERVICE 1 Date

Energy Efficiency Checklist completed? Yes ☐ No ☐

Engineer Name

Company Name

Telephone Number

Engineer ID Number

Comments

Signature

SERVICE 2 Date

Energy Efficiency Checklist completed? Yes ☐ No ☐

Engineer Name

Company Name

Telephone Number

Engineer ID Number

Comments

Signature

SERVICE 3 Date

Energy Efficiency Checklist completed? Yes ☐ No ☐

Engineer Name

Company Name

Telephone Number

Engineer ID Number

Comments

Signature

SERVICE 4 Date

Energy Efficiency Checklist completed? Yes ☐ No ☐

Engineer Name

Company Name

Telephone Number

Engineer ID Number

Comments

Signature

SERVICE 5 Date

Energy Efficiency Checklist completed? Yes ☐ No ☐

Engineer Name

Company Name

Telephone Number

Engineer ID Number

Comments

Signature

SERVICE 6 Date

Energy Efficiency Checklist completed? Yes ☐ No ☐

Engineer Name

Company Name

Telephone Number

Engineer ID Number

Comments

Signature

SERVICE 7 Date

Energy Efficiency Checklist completed? Yes ☐ No ☐

Engineer Name

Company Name

Telephone Number

Engineer ID Number

Comments

Signature

SERVICE 8 Date

Energy Efficiency Checklist completed? Yes ☐ No ☐

Engineer Name

Company Name

Telephone Number

Engineer ID Number

Comments

Signature

SERVICE 9 Date

Energy Efficiency Checklist completed? Yes ☐ No ☐

Engineer Name

Company Name

Telephone Number

Engineer ID Number

Comments

Signature

SERVICE 10 Date

Energy Efficiency Checklist completed? Yes ☐ No ☐

Engineer Name

Company Name

Telephone Number

Engineer ID Number

Comments

Signature

spares & parts online
IBASIS.CO.UK

Subject to engineering changes

0020167193_01 - 02/13

GLOW-WORM

Nottingham Road,
Belper, Derbyshire.
DE56 1JT

Because of our constant endeavour for improvement, details may vary slightly from those shown in these instructions.

Glow-worm

www.glow-worm.co.uk

spares & parts online IBASIS.CO.UK