condens

Glow-worm

Installation and Servicing

ULTIMATE 30c

G.C. No. 47-044-48

ULTIMATE 35c

G.C. No. 47-044-49

parts online spares & parts online IBASIS.CO.UK

spares & parts online
IBASIS.CO.UK

TABLE OF CONTENTS

INTRODUCTION

1 Instructions guidance 3
- 1.1 Product documentation 3
- 1.2 Explanation of symbols 3
- 1.3 Guarantee registration 3

2 Appliance description 3
- 2.1 Safety devices 3
- 2.2 Data label 3
- 2.3 Regulation and statutory requirements 4
- 2.4 Hydraulic schematic 4

3 Safety instructions and regulations 5
- 3.1 Safety instructions 5
- 3.2 Regulations 5

4 Recycling 6
- 4.1 Appliance 6
- 4.2 Packaging 6

TECHNICAL DATA

5 ULTIMATE c 7

INSTALLATION

6 Appliance location 8
- 6.1 Location 8
- 6.2 Clearances 8
- 6.3 Ventilation 8

7 Appliance installation 9
- 7.1 Scope of delivery 9
- 7.2 Recommendations before installing 9
- 7.3 Dimensions 10
- 7.4 Mounting 11

8 Hydraulic connection 12
- 8.1 Gas and water connections 12
- 8.2 Safety Discharge Valve 13
- 8.3 Connection to the condensate trap 13

9 Evacuation of combustion gas 15
- 9.1 Regulation 15
- 9.2 Flue configuration description 16

10 Electrical connections 17
- 10.1 Access to main board 17
- 10.2 Main board 18
- 10.3 Electrical wiring 18
- 10.4 External accessories 19
- 10.5 Testing the electrical connections 19
- 10.6 Wiring diagram 20

TABLE OF CONTENTS

11 Commissioning 21
- 11.1 Reading the filling pressure 21
- 11.2 Switching on 21
- 11.3 Filling the CH system (Central heating) 21
- 11.4 Filling DHW Circuit 22
- 11.5 Filling the Condensate Trap 22
- 11.6 Initial lighting 22
- 11.7 Gas rates 23
- 11.8 Testing heating system 23
- 11.9 Testing domestic hot water system 24
- 11.10 Completion 24

12 Specified Adjustment 24
- 12.1 Heating circuit adjustment 24
- 12.2 Installation settings 25
- 12.3 After Sales Service settings 25
- 12.4 Status of the appliance 26
- 12.5 Test modes 27
- 12.6 CO_2 measurement 27
- 12.7 Re-check and restart 27

13 User information 27

MAINTENANCE

14 Trouble-shooting 28
- 14.1 Fault diagnosis 28
- 14.2 Fault memory 29
- 14.3 Fault codes 29
- 14.4 Functional flow diagram 31

15 Gas conversion adjustments 32
- 15.1 Settings 32
- 15.2 Restart - re-check commissioning 33

16 Draining 33
- 16.1 Heating circuit 33
- 16.2 Domestic Hot water circuit 33

17 Servicing 33
- 17.1 Annual Maintenance 34
- 17.2 Casing removing 34
- 17.3 Combustion check and setting the air/gas ratio valve 35
- 17.4 Servicing 36
- 17.5 Silencer 36
- 17.6 Expansion vessel 37
- 17.7 Condensate trap 37
- 17.8 Combustion block 38
- 17.9 Service completion 39

18 Replacement of Parts 39
- 18.1 General 39
- 18.2 Boiler Access 40
- 18.3 Viewing window 40
- 18.4 Hydraulic block 41
- 18.5 Combustion block 43
- 18.6 Condensate trap 45
- 18.7 PCB 45

19 Spare parts 46

20 Manual Handling 48

21 Declaration of Conformity 49

INTRODUCTION

1 Instructions guidance

1.1 Product documentation

The instructions are an integral part of the appliance and must be handed to the user on completion of the installation in order to comply with the current regulation.

- Carefully read the manual, to understand all the information to enable safe installation, use and servicing. No liability can be accepted in the event of damage for not complying with the guidance in this instruction manual.

These instructions consist of, Installation, Servicing, Fault Finding, Replacement of Parts and Spares. The instructions are an integral part of the appliance and must, to comply with the current issue of the Gas Safety (Installation and Use) Regulations, be handed to the user on completion of the installation.

1.2 Explanation of symbols

DANGER:
Risk of injuries.

DANGER:
Risk of electric shock.

ATTENTION:
Risk of damage to the appliance or to its surroundings.

IMPORTANT:
Important information.

1.3 Guarantee registration

Thank you for installing a new Glow-worm appliance in your home. Glow-worm appliances are manufactured to the very highest standard so we are pleased to offer our customers a Comprehensive 5 years Guarantee.

We recommend you complete and return as soon as possible your guarantee registration card. If your guarantee registration card is missing you can obtain a copy or record your registration by telephoning the Glow-worm Customer Service number 01773 828100.

2 Appliance description

2.1 Safety devices

2.1.1 Overheating safety

The appliance is designed to recognise the potential for an overheat lockout and will shutdown before this happens.

2.1.2 Safety discharge valve

A safety discharge valve and discharge pipe are fitted to the boiler. This valve must not be touched.

- The heating safety valve opens when the pressure in the heating circuit exceeds 3 bars.

- Should there be any discharge from the pipe, isolate the boiler electrical supply and call your installer or Glow-worm's own service organisation.

2.1.3 Frost protection

The frost protection system operates the pump to start as soon as the temperature in the heating circuit falls below 12°C. The pump stops as soon as the temperature of the water contained in the heating circuit reaches 15°C. If the temperature in the heating system falls below 7°C, the burner ignites until it reaches 35°C. The frost-protection system is active when the appliance is switched on. The system alone cannot ensure that the installation is protected against frost. An separate frost thermostat is necessary to control the temperature of the system.

DANGER:
Your domestic water circuit (hot or cold) is not protected by the boiler.

2.1.4 Condensate drain blockage

During freezing conditions this may be due to the forming of ice in the condense drain external to the house. In this case, a safety device shuts down the appliance.

2.2 Data label

The data label certifies the country where the appliance is intended to be installed.

Data label location:

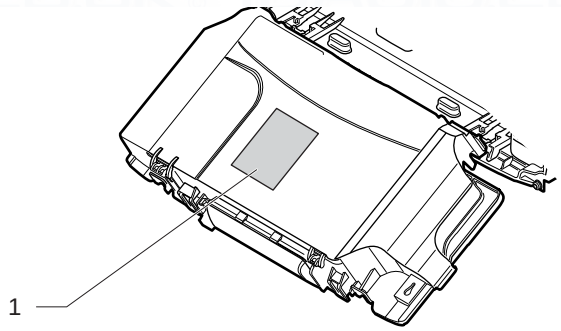

Key
1 Data label

DANGER:
The appliance shall only be connected to the gas type(s) indicated on the data label.

- Refer to chapter "Technical Data" in the technical data section to see the definition of the abbreviations used on the data label.

2.3 Regulation and statutory requirements

2.3.1 CE Mark

This boiler meets the requirements of Statutory Instrument, No. 3083 The Boiler (Efficiency) Regulations, and therefore is deemed to meet the requirements of Directive 92/42/EEC on the efficiency requirements for new hot water boilers fired with liquid or gaseous fuels.
Type test for purposes of Regulation 5 certified by: Notified body 1312.
Product/production certified by: Notified body 0086.

The CE mark indicates that the appliances described in this manual are in compliance with the following directives:

- European directive n°2009-142 relative to gas appliances
- European directive n°2004-108 from the European Parliament and Council relative to electromagnetic compatibility
- European directive n°2006-95 from the European Parliament and Council relative to low voltage
- European directive n°92-42 relative to the yield of boilers

2.3.2 Local regulations

Benchmark places responsibilities on both manufacturers and installers. The purpose is to ensure that customers are provided with the correct equipment for their needs, that it is installed, commissioned and serviced in accordance with the manufacturer's instructions by a competent person approved at the time by the Health and Safety Executive and that it meets the requirements of the appropriate Building Regulations. The Benchmark Checklist can be used to demonstrate compliance with Building Regulations and should be provided to the customer for future reference.
Installers are required to carry out installation, commissioning and servicing work in accordance with the Benchmark Code of Practice which is available from the Heating and Hotwater Industry Council who manage and promote the Scheme.

- Visit www.centralheating.co.uk for more information.

benchmark
COLLECTIVE MARK
THE MARK OF QUALITY FOR THE INSTALLATION, COMMISSIONING AND SERVICING OF DOMESTIC HEATING AND HOT WATER SYSTEMS

2.4 Hydraulic schematic

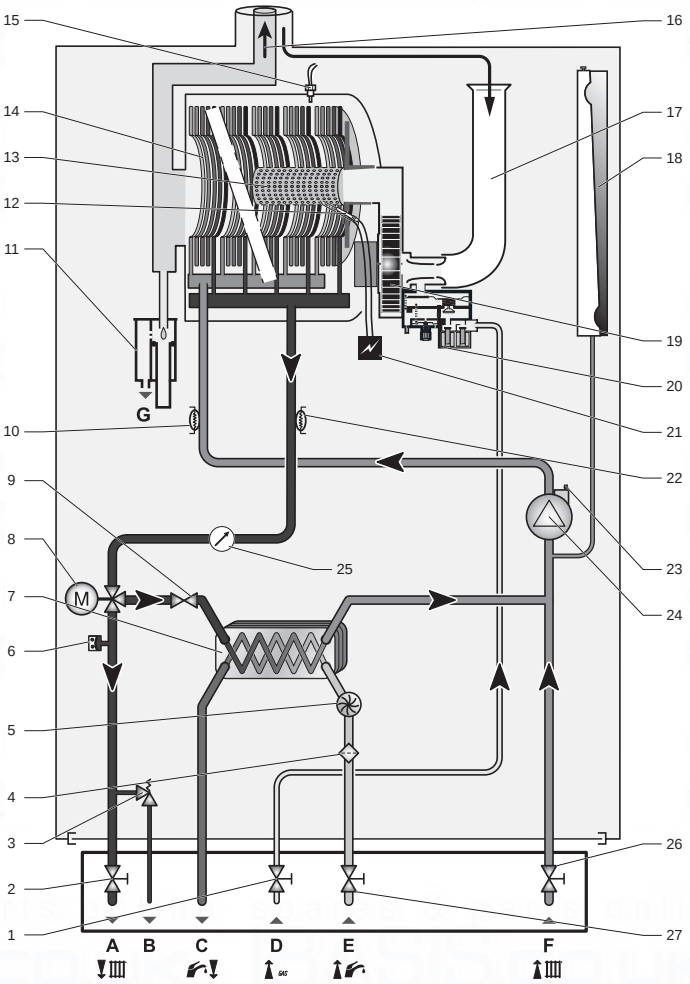

Key
1 Gas isolating valve
2 Heating flow isolating valve
3 Heating safety valve
4 Filter on cold water inlet
5 DHW flow sensor
6 Water pressure sensor
7 Domestic plate to plate heat exchanger
8 Three way valve
9 By-pass
10 Heating return thermistor
11 Condensate trap
12 Ignition and control electrode
13 Burner
14 Main heat exchanger
15 Thermal fuse
16 Flue outlet
17 Silencer
18 Heating expansion vessel
19 Fan
20 Gas control valve
21 Ignition module
22 Heating flow thermistor
23 Air vent
24 Pump
25 Manometer
26 Heating return isolating valve
27 Domestic cold water isolating valve
A Heating flow
B Pipe for heating safety valve
C Domestic hot water outlet
D Gas
E Cold water inlet
F Heating return
G Condensate drain

3 Safety instructions and regulations

3.1 Safety instructions

If the gas pressure at the input of the appliance is outside the range specified, the appliance must not be put into operation.

DANGER:
Incorrect installation can cause electric shock or appliance damage.

- Never disable security devices and do not try to adjust them.

With regards to the "Manual Handling Operations, 1992 Regulations", the appliance exceeds the recommended weight for a one person lift.
The handling of the boiler may involve lifting, pushing and pulling, the use of a sack truck may be required.

- Be sure to consider the following handling techniques and precautions:
  - Grip the appliance at its base
  - Use safety clothing where appropriate, e.g. gloves, safety footwear.
- Ensure safe lifting techniques are used:
  - Keep back straight.
  - Avoid twisting at the waist.
  - Avoid upper body/top heavy bending.
  - Always grip using the palm of the hand.
  - Use designated hand holds.
  - Keep load as close to body as possible.
  - Always use assistance if required.
- Under no circumstances must the user interfere with or adjust sealed parts.
- When assembling the connections, correctly position the seals to avoid any leakage of gas or water.
- This appliance contains metal parts (components) and care should be taken when handling and cleaning, with particular regard to edges.

The basic safety instructions must be followed before attempting to maintain or replace spare parts:

- Stop the appliance.
- Electrically isolate the appliance from the power supply.
- Turn off the appliance gas isolation valve.
- Hydraulically isolate the appliance using the isolation valves if provided.
- Should you need to replace hydraulic components, drain the appliance.
- Protect all the electrical components from water while working on the appliance.
- Use only original spare parts.
- Use only new O-rings and gaskets.
- After having completed work on gas or water carrying components, check for their tightness.
- When work on the appliance is completed, perform an operational test and check for safety.

3.2 Regulations

3.2.1 Statutory requirements

IMPORTANT

Where no British Standards exists, materials and equipment should be fit for their purpose and of suitable quality and workmanship.

The installation of this boiler must be carried out by a competent person approved at the time by the Health and Safety Executive and in accordance with the rules in force in the countries of destination.

Manufacturer's instructions must not be taken as overriding statutory requirements.

Statutory Requirements

In GB, the installation of the boiler must comply with the requirements of the current issue of BS6798 and be carried out by a competent person approved at the time by the Health and Safety Executive and as described in the following regulations:
- The manufacturer's instructions supplied.
- The Gas Safety (Installation and Use) Regulations.
- The appropriate Buildings Regulations either The Building Regulations, The Building Regulations (Scotland), The Building Regulations (Northern Ireland).
- The Water Supply (water fittings) Regulations 1999 and water byelaws 2000, Scotland.
- The Health and Safety at Work Act, Control of Substances Hazardous to Health (COSHH).
- Any electrical work must conform to BS7671 and part P of the building regulations where applicable.

Where no specific instructions are given, reference should be made to the relevant British Standard Code of Practice.

In IE, the installation must be carried out by a competent person approved at the time by the Health and Safety Executive and installed in accordance with the current edition of I.S.813 "Domestic Gas Installations", the current Building Regulations and reference should be made to the current ETCI rules for Electrical Installation.

GB: the following Codes of Practice apply: BS4814, BS6798, BS5440 Part 1 and 2, BS5546 Part 1, BS5449, BS6891, BS6700, BS7074 Part 1 and 2, BS7593, BS7671.
IE: I.S.813, BS5546, BS 5449, BS 7074, BS 7593.

NOTE: For further information, see the current issue of the Building Regulations, approved document L1 (in the UK) and the following current issues of:
1) Central heating system specification (CheSS) and
2) Controls for domestic central heating system and hot water. BRECSU.

Gas Supply

The gas installation must be in accordance with the relevant standards.

In GB, this is BS6891.
In IE, this is the current edition of I.S.813 “Domestic Gas Installations”.

The supply from the governed meter must be of adequate size to provide a steady inlet working pressure of 20mbar (8in wg) at the boiler. On completion, test the gas installation for tightness using the pressure drop method and suitable leak detection fluid, purge in accordance with the above standard.

Domestic Hot Water

All domestic hot water circuits, connections, fittings must be in accordance with the relevant standards and water supply regulations.

Heating System

In GB, it is necessary to comply with the Water Supply (Water Fittings) Regulations 1999 (for Scotland, the Water Byelaws 2000, Scotland). To comply with the Water regulations your attention is drawn to: The Water Regulations guide published by the Water Regulations Advisory Service (WRAS) gives full details of the requirements.

In IE, the requirements given in the current edition of I.S.813 “Domestic Gas Installations” and the current Building Regulations must be followed.

Electrical Supply

The boiler MUST be earthed. All system components shall be of an approved type and all wiring to current I.E.E. wiring regulations. External wiring must be correctly earthed, polarised and in accordance with the relevant standards.

In GB, this is BS 7671.
In IE, this is the current edition of ETCI rules.

The boiler MUST be connected to a permanent 230V ac, 50Hz supply.
Connection of the whole electrical system of the boiler, including any heating controls, to the electrical supply MUST be through one common isolator and must be fused 3 Amp maximum.

3.2.2 Other regulations

Control of Substances Hazardous to Health

Under Section 6 of The Health and Safety at Work Act 1974, we are required to provide information on substances hazardous to health. The adhesives and sealants used in this appliance are cured and give no known hazard in this state.

Insulation Pads:
These can cause irritation to skin, eyes and the respiratory tract. If you have a history of skin complaint you may be susceptible to irritation. High dust levels are usual only if the material is broken. Normal handling should not cause discomfort, but follow normal good hygiene and wash your hands before eating, drinking or going to the lavatory.

- If you do suffer irritation to the eyes or severe irritation to the skin seek medical attention.

4 Recycling

IMPORTANT:
The recycling of the packaging must be carried out by the qualified professional who installed the appliance.

4.1 Appliance

Most of the appliance is made of recyclable materials.

This symbol indicates that this appliance must not be disposed of with household waste, that it should be selectively collected for energy recovery, reuse or recycling.

- Take the appliance to an appropriate collection point.

IMPORTANT:
By complying with this directive, you will contribute to the preservation of natural resources and the protection of human health.

4.2 Packaging

We recommend that you recycle the packaging of the appliance in a responsible fashion.

- Sort the waste in order to separate those elements which can be recycled (cardboard, plastics ...) and those which cannot be recycled.
- Eliminate the waste in accordance with existing regulations.

TECHNICAL DATA

5 ULTIMATE c

Boiler, type C13, C33, C43

Description	Unit	30	35
Gas category		II_{2H3P}	II_{2H3P}
SEDBUK rating 2009	%	88.8%	88.9%
Heating			
Maximum heating input power	kW	25	30.6
Minimum heating output power at 80/60°C (P min.)	kW	5.9	8.5
Maximum heating output power at 80/60°C (P max.)	kW	24.5	30
Minimum heating output power at 50/30°C (P min.)	kW	6.5	9.2
Maximum heating output power at 50/30°C (P max.)	kW	26.4	32.5
Minimum heating temperature	°C	10	10
Maximum heating temperature	°C	80	80
Minimum heating flow rate	l/h	400	400
Content of heating expansion vessel	l	8	8
	gallons	1.76	1.76
Heating expansion vessel preset pressure	bar	0.75	0.75
	psi	10.9	10.9
Maximum heating system volume (approx)	l	160	160
Heating safety valve preset pressure (PMS)	bar	3	3
	lbf/in²	36/3	36/3
Domestic Hot Water			
Minimum DHW output power (P min.)	kW	6.1	8.7
Maximum DHW output power (P max.)	kW	30.6	35.7
Maximum DHW temperature	°C	60	60
Specific flow rate (ΔT of 35 K)	l/min	12.5	14.6
Minimum inlet water pressure	bar	0.3	0.3
	psi	4.3	4.3
Maximum inlet water pressure	bar	10	10
	psi	145	145
Combustion			
Appliance NOx class		5	5
Electrical			
Electrical supply	V/Hz	230V / 50Hz	230V / 50Hz
Standby mode electrical power	W	6	6
Operational mode electrical power (Max)	W	151	151
Internal fuse rating on main PCB	A	2	2
Index of electrical protection (EN 60529)		IPX4D	IPX4D

Description	Unit	30	35
Gas connection Ø O.D.	mm	15 (copper)	15 (copper)
Heating flow and return connection Ø O.D.	mm	22 (copper)	22 (copper)
Domestic Hot Water connection Ø O.D.	mm	15 (copper)	15 (copper)
Condensate connection Ø I.D.	mm	Pushfit Plastic	Pushfit Plastic
Safety valve discharge connection Ø O.D.	mm	15 (copper)	15 (copper)
Lift weight	kg	37,7	38,3
	lb	82	84.8
Total weight (installed)	kg	41	43
Number of CE certificate		1312 BU 5335	1312 BV 5336

Description	Unit	30	35
Natural Gas G 20 (15 °C, 1013.25 mbar)			
Maximum DHW gas flow rate	m^3/h	3,24	3,77
Maximum heating gas flow rate	m^3/h	2,65	3,24
Minimum gas flow rate	m^3/h	0,65	0,92
CO_2 at Qmax DHW + "tolerance case ON"	%	9.2 ± 0.3%	9.2 ± 0.3%
CO_2 at Qmax DHW + "tolerance case OFF"	%	9.0 ± 0.2%	9.0 ± 0.2%
CO_2 at Qmin + "tolerance case ON"	%	8.9 ± 0.3%	8.9 ± 0.3%
CO_2 at Qmin + "tolerance case OFF"	%	8.7 ± 0.2%	8.7 ± 0.2%
Inlet pressure	mbar	20	20
Propane Gas G 31 (15 °C, 1013.25 mbar)			
Maximum DHW gas flow rate	kg/h	2,38	2,77
Maximum heating gas flow rate	kg/h	1,94	2,37
Minimum gas flow rate	kg/h	0.47	0.67
CO_2 at Qmax DHW + "tolerance case ON"	%	10.3 ± 0.3%	10.3 ± 0.3%
CO_2 at Qmax DHW + "tolerance case OFF"	%	10.1 ± 0.3%	10.1 ± 0.3%
CO_2 at Qmin + "tolerance case ON"	%	9.8 ± 0.3%	9.8 ± 0.3%
CO_2 at Qmin + "tolerance case OFF"	%	9.6 ± 0.2%	9.6 ± 0.2%
Inlet pressure	mbar	37	37

INSTALLATION

IMPORTANT:
All the drawings dimensions are shown in mm.

6 Appliance location

6.1 Location

6.1.1 Instructions

Before choosing a site for the appliance, carefully read the safety warnings and installation manual.

- Ensure that wall to which the appliance will be mounted on is structurally safe in order to support the weight of the appliance.
- Ensure that the space that the appliance is to be installed within allows the appliance to be installed and the clearances maintained. This will ensure that the connections to the water, gas and flue can be accessed and inspected (see chapter Clearances).
- Explain these requirements to the appliance user.
- Do not install the appliance above another appliance that could damage it (for example, above a cooker that might emit steam or grease) or in a room, which has a lot of dust in the atmosphere which is corrosive.
- The boiler must be fitted inside the property and exposed pipe work may need to be protected from frost by fitting a frost thermostat.

6.1.2 Regulations

Location

This boiler is not suitable for outdoor installation.
This boiler is suitable for installation in bathroom zones 2 and 3.

Timber Frame Buildings

If the boiler is to be installed in a timber frame building it should be fitted in accordance with the Institute of Gas Engineers document IGE/UP/7/1998. If in doubt seek advice from local gas undertaking or Glow-worm.

6.2 Clearances

- To allow periodic maintenance, ensure the distances indicated on the diagram.

Additional clearances may be beneficial around the boiler for installation and servicing.
For flue installations where external access is not practicable, consideration should be given for the space required to insert the flue from inside the property, which may necessitate clearance larger than those specified in diagram.

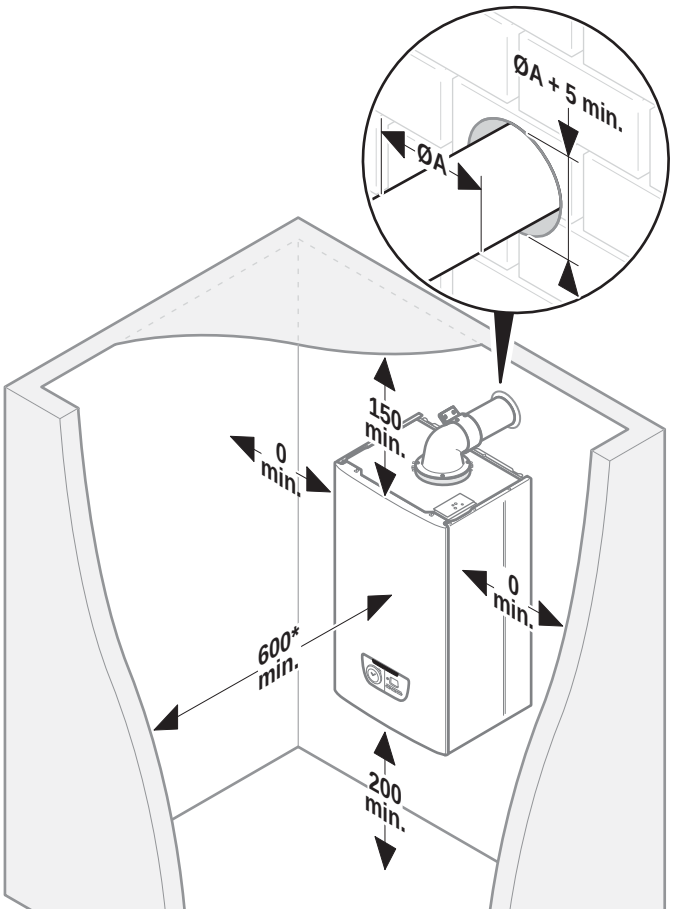

Key
* A removable compartment door can be placed a minimum 5 mm in front of appliance. A clearance of 600 mm is required from a fixed surface.

The boiler and flue are suitable for installation onto and through combustible materials provided that:

- Minimum 5mm clearance is maintained around the circumference of the flue (air intake).
- The combustible surface and fixings are suitable for supporting the load.
- The minimum clearances from the boiler case are maintained.

6.3 Ventilation

6.3.1 Room Ventilation

The boiler is room sealed so a permanent air vent is not required.

6.3.2 Cupboard or Compartment Ventilation

Due to the high efficiency and low casing temperature of this boiler, cupboard or compartment ventilation is not necessary.

- Existing ventilation should be investigated for its purpose before removing.

7 Appliance installation

7.1 Scope of delivery

The appliance is delivered in a single carton with a document pack and fittings.

IMPORTANT:
The flues package will be ordered according to the configuration of the installation.

- Please check the contents.

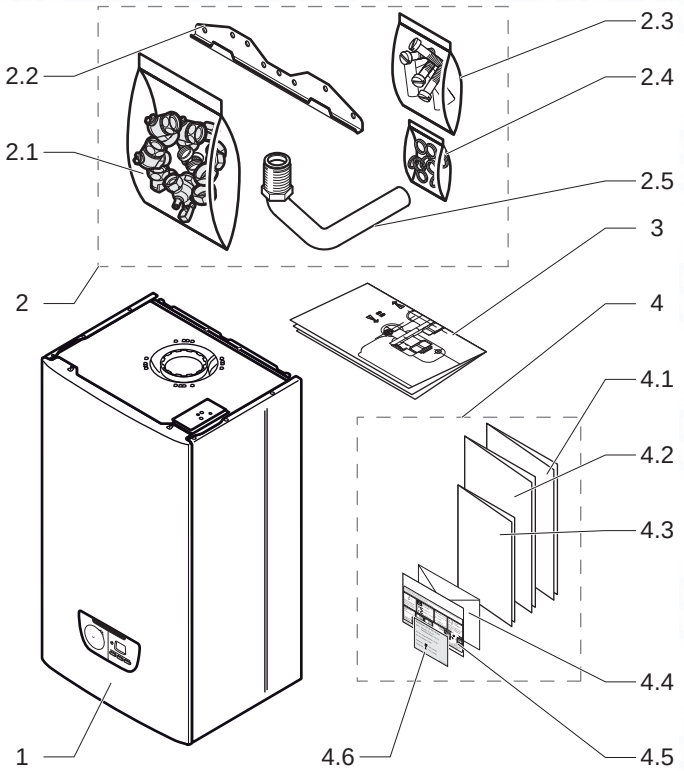

Key

1	Boiler	(x1)
2	Accessories bag	(x1)
2.1	Connection bag	(x1)
	- Heating return valve	(x1)
	- Cold water inlet valve	(x1)
	- Heating flow valve	(x1)
	- Domestic hot water connection	(x1)
	- Gas isolation valve	(x1)
2.2	Hanging bracket	(x1)
2.3	Screws and wall plugs bag	(x1)
2.4	Seals bag	(x1)
	- Flat seal ½"	(x2)
	- Flat seal ¾"	(x5)
	- Flat seal for cold water inlet ¾"	(x4)
2.5	PRV pipe	(x1)
3	Wall template	(x1)
4	Documents pack	(x1)
4.1	Installation and servicing manual	(x1)
4.2	Flue book	(x1)
4.3	Instructions for use	(x1)
4.4	Guarantee envelope pack	(x1)
4.5	Magnetic lighting instruction label	(x1)
4.6	Gas conversion label	(x1)

7.2 Recommendations before installing

7.2.1 Domestic hot water circuit design

Water pressure

The minimum working pressure to obtain the maximum domestic flow is 1,0 bar.

The maximum working pressure of the domestic hot water circuit is 10 bar. If the cold water supply pressure exceeds this, then a pressure-reducing valve must be fitted in the supply to the boiler.

'Hard' water areas

The temperatures within the heat exchanger are limited by the boiler control system to minimise scale formation within the hot water pipework. However, in areas where the water is 'hard' (i.e. more than 200 mg/L of calcium carbonate), it is recommended that the hot water setting is reduced and that a scale reducer is fitted, refer to the manufacturer's instructions or consult the local water company for additional advice.

Domestic water flow rate

The domestic hot water flow has a restrictor, factory fitted, which reduces the flow to a maximum of:
- 30 : 10/min,
- 35 : 12/min,

Central Heating water flow rate

If it is necessary to alter the flow rate, the system can be fitted with a lockable balancing valve in the main flow or return pipes.

- **Heating circuit design**

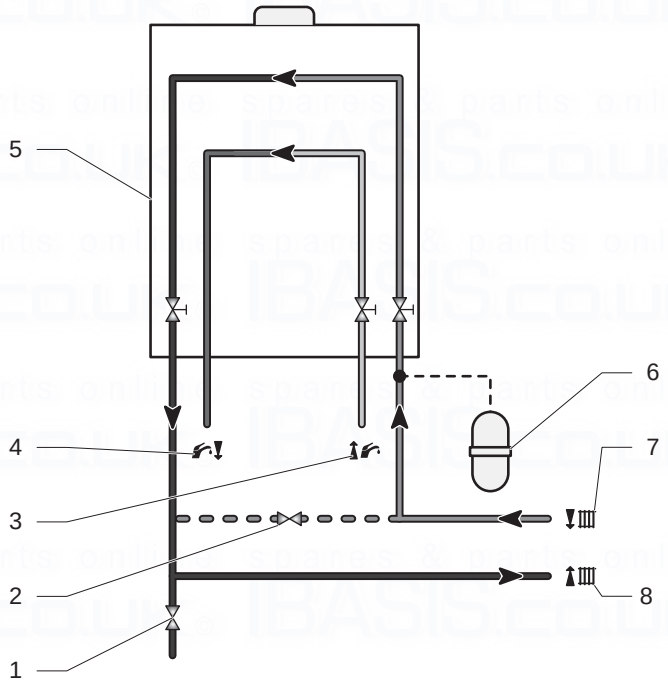

Key
1 Drain point
2 External bypass (if required)
3 Domestic hot water out
4 Domestic cold water supply in
5 Boiler
6 Additional expansion vessel (if required)
7 Heating return circuit
8 Heating flow circuit
9 Optional balancing valve

General

This boiler is designed for use as part of a sealed water central heating system with fully pumped circulation. The pump, expansion vessel and associated safety devices are all fitted within the boiler.

Safety valve

The safety valve is an integral part of the boiler and it cannot be adjusted. The pipe from the safety discharge valve must discharge safely in accordance with standards.

Expansion vessel

The boiler has an integral expansion vessel with a capacity of 8 litres (1.76 gallons), with a charge pressure of 0.75bar.

IMPORTANT:
The heating system volume should be calculated to ensure that the expansion vessel is suitable, it may be necessary to add an additional vessel.

- In GB, Guidance on vessel sizing is also given in the current issue of BS5449 and BS7074 Part 1.
- In IE, current edition of I.S.813 “Domestic Gas Installations”.

Bypass

The boiler is fitted with an automatic bypass.

- Ensure that under no circumstances does the flow rate drop below the figure specified, refer to chapter "Technical data".

Filling the sealed system

IMPORTANT:
The boiler does not contain any filling loop, an external one must be fitted.

Suitable external filling systems are shown diagrammatically, see diagram below.

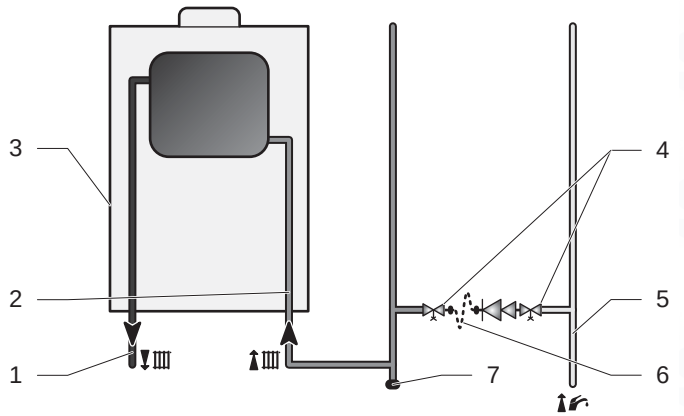

Key
1 Heating flow circuit
2 Heating return circuit
3 Boiler
4 Double check valve assembly
5 Domestic cold water supply in
6 Temporary filling loop (remove immediately after filling)
7 Drain point

The system should be pressurised to 0.8bar, indicated on the digital display with no heating demand.

Drain points

Drain taps must be provided at all low points of the system, which will allow the entire system to be drained.

Drain taps shall be to the current issue of BS2879.

Water treatment

Existing system- It is essential that prior to installing the new boiler the system is thoroughly flushed.

New system- For optimum performance after installation, the boiler and its associated central heating system should also be flushed.

Flushing shall be carried out in accordance with BS 7593, a chemical cleanser can be used either Sentinel X300, X400 or Fernox F3 are suitable.

It is recommended to flush existing systems first before fitting the new boiler.

- Ensure all cleanser is removed from the whole system before adding an inhibitor.

For long-term corrosion protection after flushing, an inhibitor suitable for stainless steel heat exchangers can be used. Either Sentinel X100 or Fernox F1 inhibitor can be used.

The boiler is suitable for use on systems using softened water.

7.3 Dimensions

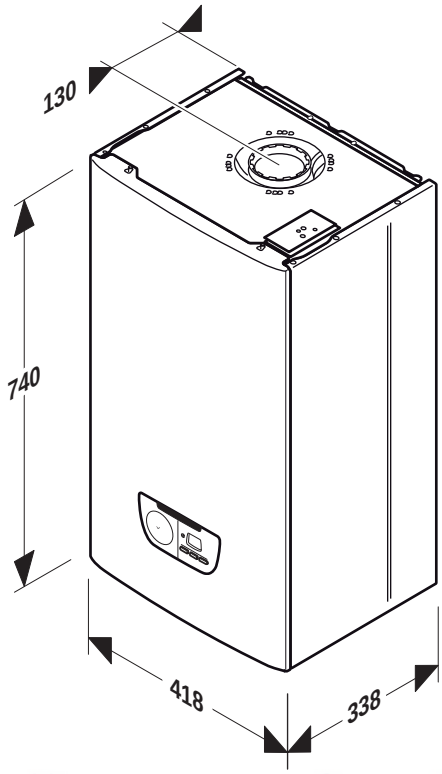

7.4 Mounting

- Make sure that the equipment used for implementing the installation is compatible with that of the appliance.
- Determine the assembly location. See the "Appliance location" chapter.

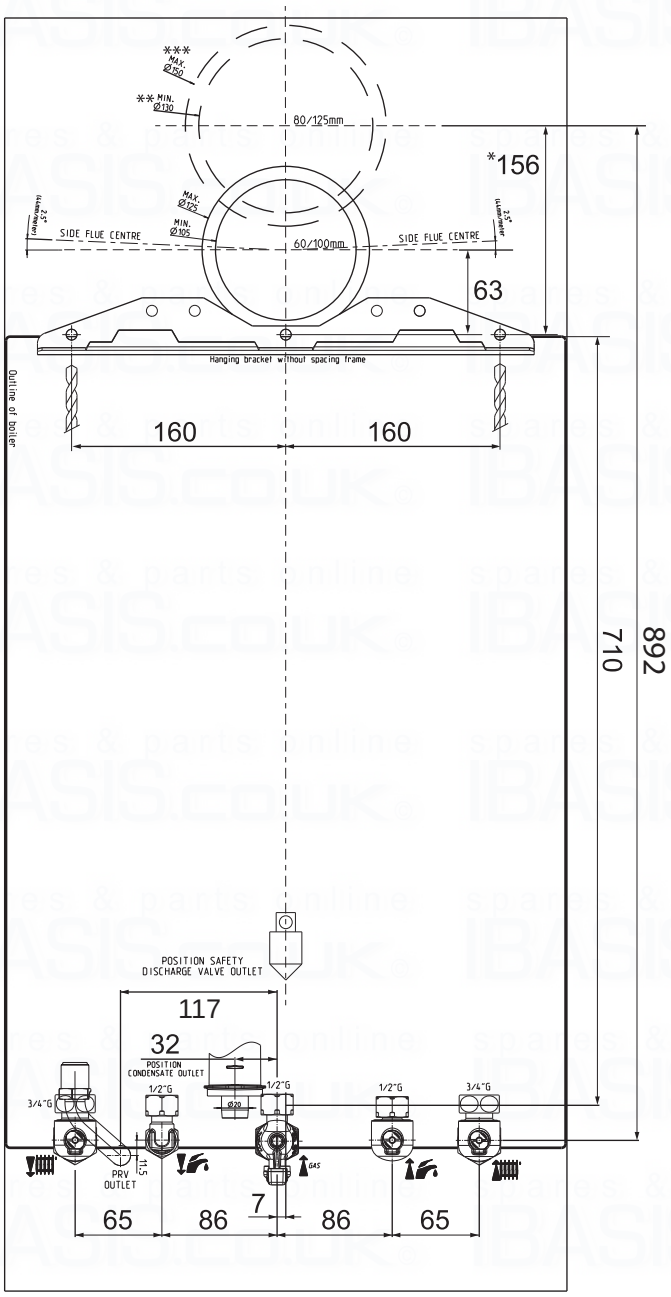

* 80/125 flue = Ø150mm
** 80/125 flue = Ø130mm
*** 80/125 flue = 156mm

- Take the wall template and place in the desired position on the wall, giving due consideration to the required boiler clearances, see chapter "Appliance location › Clearances", and the flue you are fitting.

7.4.1 Fixing to the wall

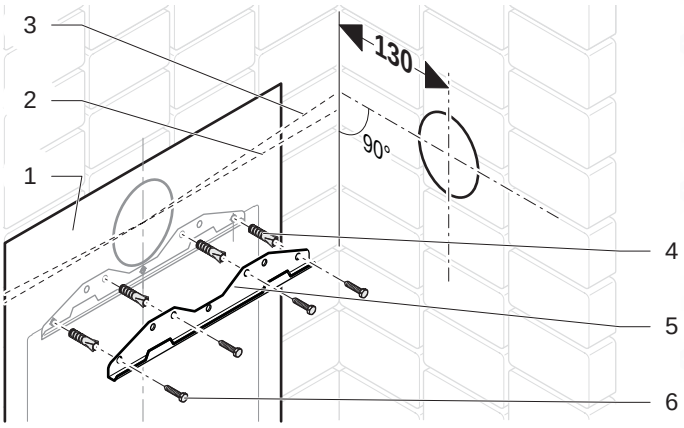

Key
1 Wall template
2 Standard flue length horizontal
3 2.5° 44mm/metre inclined extended flue length
4 Wall plug
5 Hanging bracket
6 Screw

Flue hole cutting

- Mark the position of the flue centre.
- Remove the wall template, then drilling the flue hole.

IMPORTANT:
The flue is designed with an internal fall of 44mm/metre (2.5°), therefore the hole can be drilled horizontally.

- Use a 105mm diameter core drill for external access flue installation (60/100 flue) (80/125 flue › Ø130mm).
- Use a 125mm diameter core drill for internal access only flue installation (60/100 flue) (80/125 flue › Ø150mm).

IMPORTANT:
If flue extension pipes are to be used then a core drill size of 125mm is required. This will allow the extension pieces to slope at 44mm/metre (2.5°) towards the boiler.

- If fitting a side flue, extend the flue centre line into the corner then 130mm along the adjacent wall.
- If fitting an extended side flue, determine the flue hole centre by extending the dashed inclined line on the template to the side wall. This dashed line is drawn at 44mm/metre (2.5o) rise from the boiler. Where this line reaches the side wall, a horizontal line should be marked. The vertical centre line of the flue should then be marked at 130mm from the back wall. To allow for the flue passing through the wall at this angle a 125mm hole should be drilled irrespective of internal or external installation.

Hanging bracket fixing

Due to the varied site conditions the fixings supplied may not be suitable, please make sure that those used are.

- Drill the holes for the fixing screws in accordance with the wall template.
- Fix the hanging bracket on the wall.

7.4.2 Boiler hanging

DANGER:
With regards to the Manual Handling Operations, 1992 Regulations, the following lift operation exceeds the recommended weight for a one person lift, refer to chapter "Manual Handling".

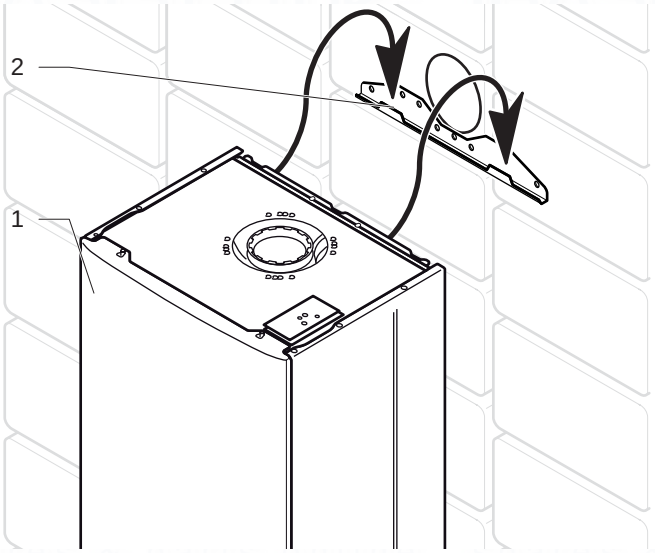

Key
1 Boiler
2 Hanging bracket

- Lifting the boiler into position, lean the top of the boiler slightly to the wall and position just above the hanging bracket.
- Lower the boiler slowly and engage onto the hanging bracket.

8 Hydraulic connection

8.1 Gas and water connections

The whole of the gas installation, including the meter, should be inspected, tested for tightness and purged in accordance with the current issue of BS6891 and in IE the current edition of I.S.813 “Domestic Gas Installations”.

IMPORTANT:
The appliance may contain a small amount of water, place a water container beneath the boiler connections.

- Take care to clean the pipes before assembly removing any debris or burrs. Grease and oils may need to be removed they are not possible to remove by cleansing and flushing. Foreign bodies in the system may enter the appliance and interrupt its operation.
- Do not use any solvent products, due to the risk of damaging the circuit.

DANGER:
Do not perform any 'hot work' directly under the appliance, this may cause damage to the appliance base. Heat may also damage the isolation valves. Always pre-assemble pipes before fitting them to the boiler.

- Only use original seals supplied with the appliance.
- Check that there are no leaks. Repair if necessary.
- Check the cold water inlet filter is fitted (located in the appliance cold water inlet pipe).

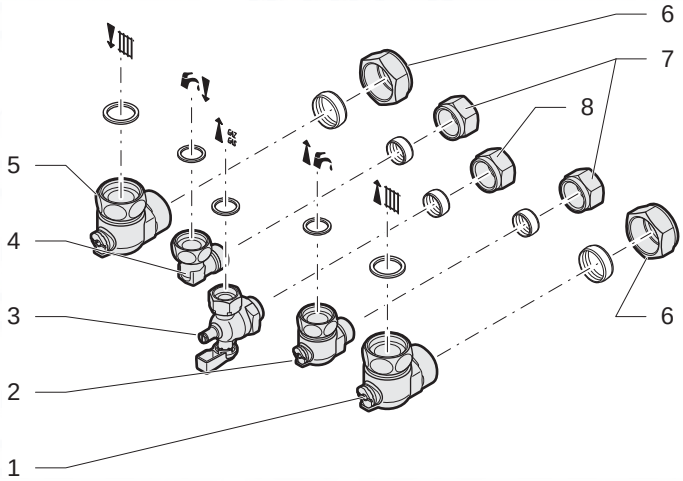

Key
1 Heating return isolating valve + sealing washer ¾"
2 Cold water inlet isolating valve + sealing washer ½"
3 Gas service isolating valve with pressure test point + sealing washer ½"
4 Domestic hot water outlet isolating valve + sealing washer ½"
5 Heating flow isolating valve + sealing washer ¾"
6 Connection Ø O.D. 22 mm
7 Connection Ø O.D. 15 mm
8 Gas connection Ø O.D. 15 mm

- Use only the original gas cock GER/1 DN15, CE-0085 CL 0082.
- Use only the olive and flat seal washer supplied with the gas cock.
- Remove the protective caps from the boiler connections.
- Flush out the domestic hot water and the heating systems.

IMPORTANT:
Before turning on the cold mains supply to the boiler turn off the cold water inlet to the boiler, lock the filling loop in the closed position and close its filling taps.

8.2 Safety Discharge Valve

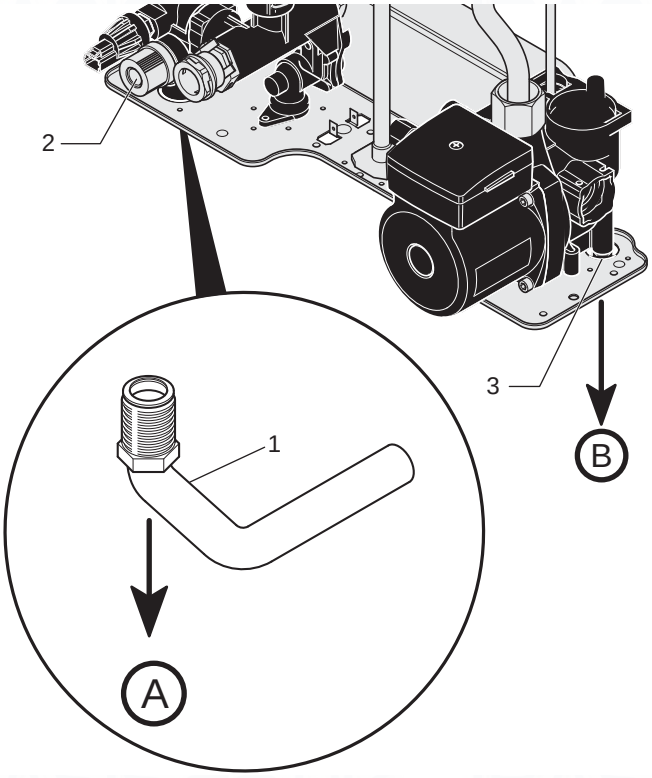

Key
1 Discharge pipe 15mm o.d.
2 Pressure relief valve PRV
3 Draining outlet
A PRV outlet - to outside
B Appliance drain

This must be extended, using not less than 15mm o.d. pipe, to discharge, in a visible position, outside the building, facing downwards, preferably over a drain.

To ease future servicing it is advisable to use a compression type fitting to extend the safety discharge valve tube.

The pipe must have a continuous fall and be routed to a position so that any discharge of water, possibly boiling, or steam cannot create any danger to persons, damage to property or external electrical components and wiring.

8.3 Connection to the condensate trap

DANGER:
Condensate produced by the appliance is mildly acidic (pH 3.5 - 5.0). Use protective gloves

ATTENTION:
Condensate must only be discharged in accordance with these instructions.

IMPORTANT:
The volume of condensates evacuated can reach about 15 litres per day for a detached house. This volume is negligible compared to the volume of waste water discharged by a house, because the condensates are diluted in this water.

- Refer to BS5546 and BS6798 for advice on disposal of boiler condensate.

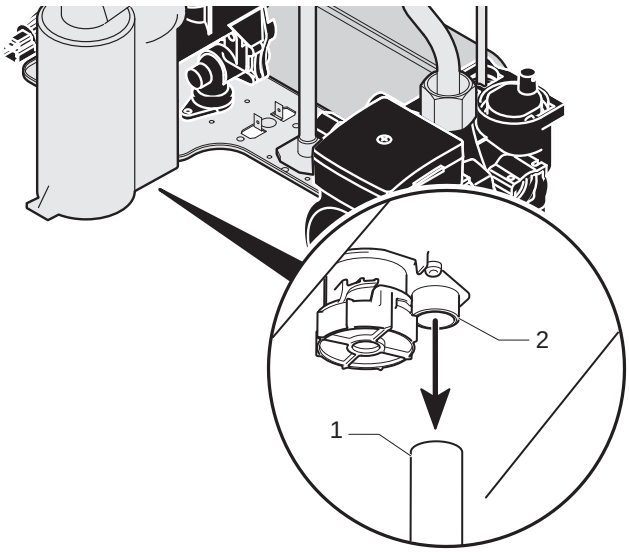

Key
1 Condensate pipe
2 Condensate outlet pushfit

- Make sure there is no protective plug fitted.
- Connect the condensate pipe (1) to the condensate outlet (2).

IMPORTANT:
The pipe should have a fall of a least 2.5º 44mm/metre away from the boiler.

Wherever possible, the condensate drainage pipe should be terminated into a suitable internal foul water discharge point such as an internal soil and vent stack, internal kitchen or bathroom waste pipe, washing machine waste pipe etc - ensuring that condensate drains away from the boiler under gravity.

Consideration must always be given to reducing the possibility of condensate pipes freezing and guidance must always be followed in the current BS 6798:2009. It is recommended to insulate external condensate pipes, any insulation must be vermin and peck-proof.

If it is unavoidable to run and terminate the condensate internally it is strongly advised to minimise the outside length of pipe and be of a minimum external diameter of 32 mm. Condensate pipes that pass through or from appliances installed in lofts, garages and basements should be treated as external pipes. Follow good installation practices and remove burrs from cut pipes and observe the recommended jointing method of the pipes and fittings. Note some installations may require the use of a condensate pump on order to achieve internal discharge.

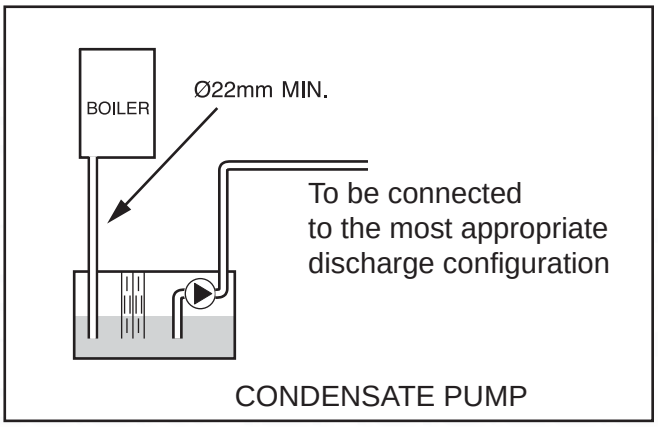

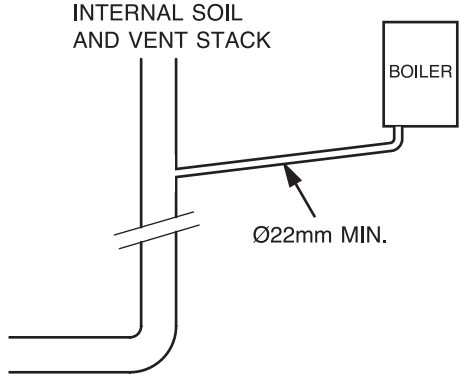

Internal Soil and Vent Pipe

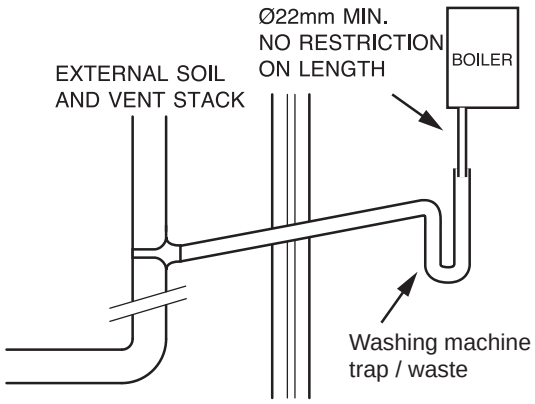

External Soil and Vent Pipe

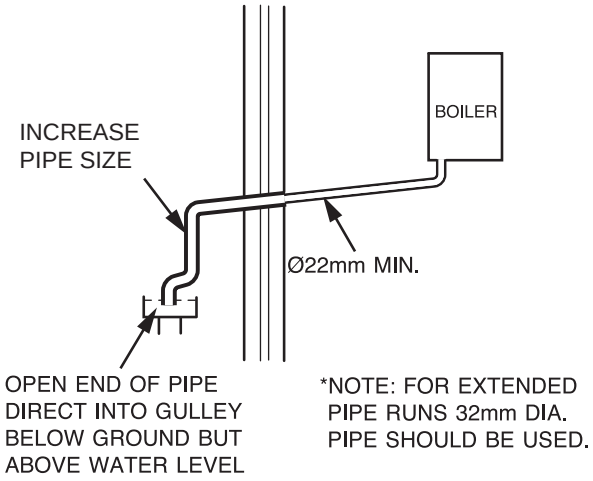

External Termination to a Gulley or Hopper

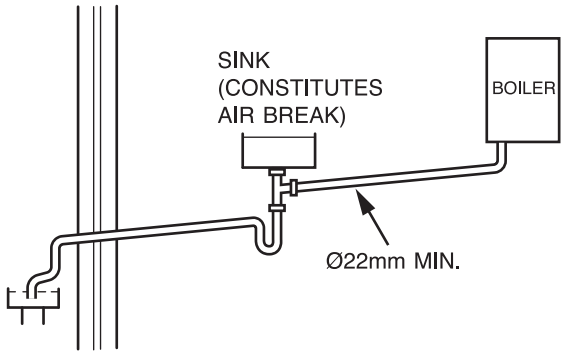

Internal Termination into Combined Sink Waste

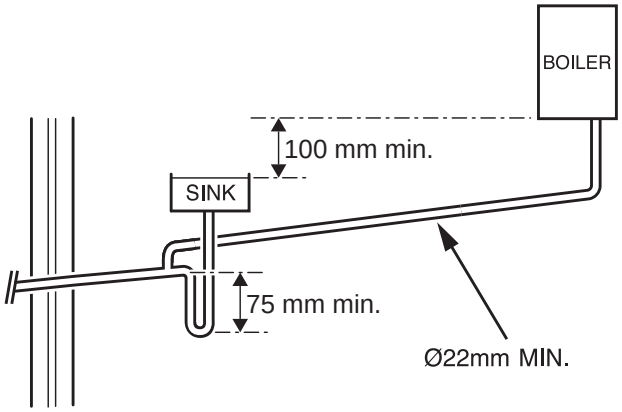

Internal Termination Downstream of Sink Waste

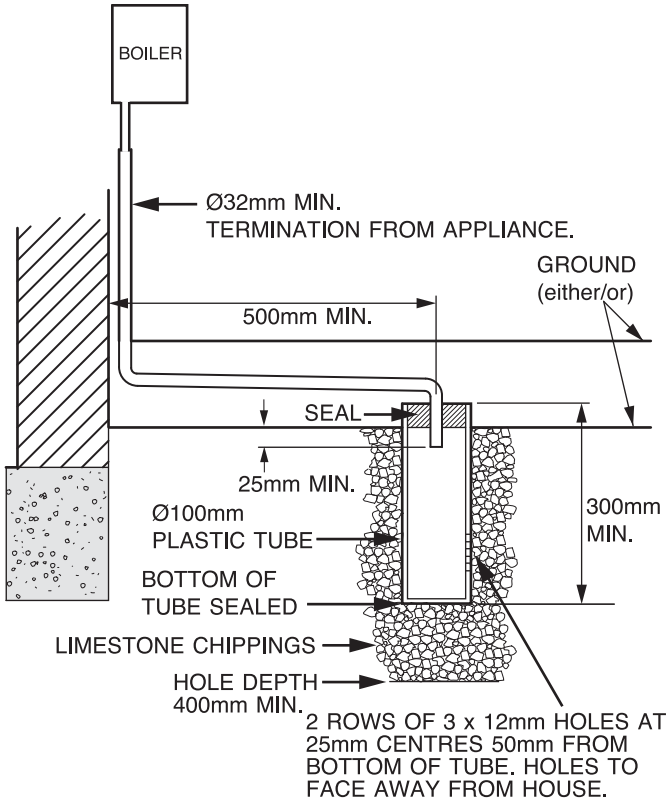

External Termination into Soakaway

NOTE: PIPEWORK SHOULD ALWAYS FALL AWAY FROM BOILER BY AT LEAST 2.5° 44mm FOR EVERY 1M.

9 Evacuation of combustion gas

9.1 Regulation

ATTENTION:
Only flue accessories supplied by Glow-worm must be used.

Different flue outlet configurations can be carried out.

- Consult your supplier for more information about the other possibilities and associated accessories.

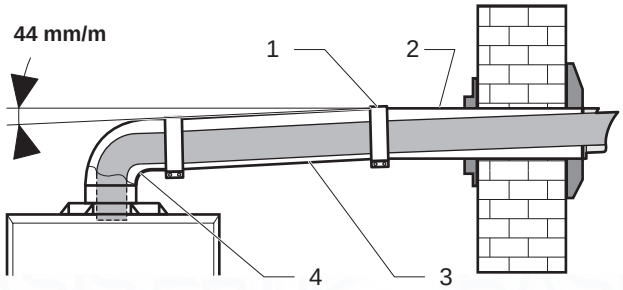

- Standard flue terminal kits have an in-built fall back to the boiler to drain the condensate. These can be fitted level between the appliance and the termination position. All other extended flues must have a fall of at least 44mm/m

The maximum length of the flue outlet is defined according to its type (for example C13).

- Whatever the kind of flue system chosen, observe the minimum distances indicated in the chart below to position the flue terminals.
- To install the flue, refer to the separate flue instruction supplied with your appliance.
- Explain these requirements to the user of the appliance.

DANGER:
If necessary, you must install a flue terminal guard.

ATTENTION:
Caution! The connection between the flue elbow and the flue outlet must be sealed.

In GB the minimum acceptable siting dimensions for the terminal from obstructions, other terminals and ventilation openings are shown in diagram overleaf.

In IE the minimum distances for flue terminal positioning must be those detailed in I.S.813 “Domestic Gas Installations”.

The terminal must be exposed to the external air, allowing free passage of air across it at all times.

Being a condensing boiler some pluming may occur from the flue outlet. This should be taken into consideration when selecting the position for the terminal.

Carports or similar extensions of a roof only, or a roof and one wall, require special consideration with respect to any openings, doors, vents or windows under the roof. Care is required to protect the roof if made of plastic sheeting. A carport is defined as a roof and one wall.

ATTENTION:
If the flue terminal is positioned near a light source insects may enter the flue system. Where safe and practical to do so advise the homeowner to check the flue outlet and clear visible insects from the terminal end.

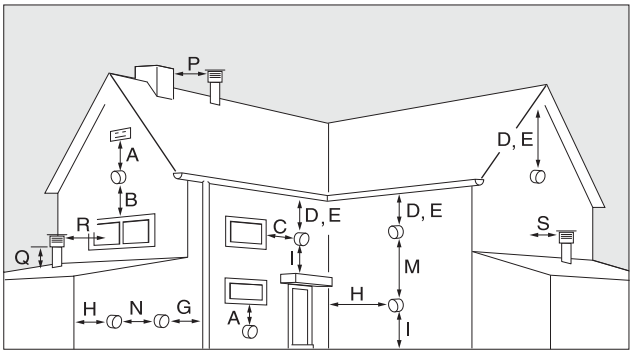

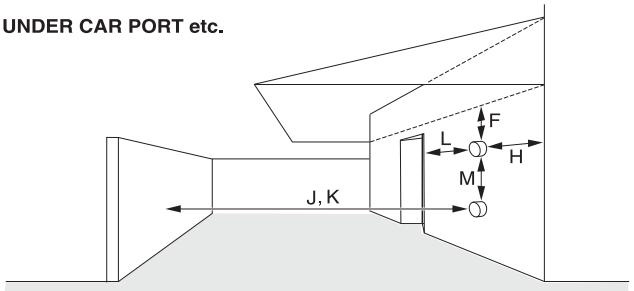

Position	Position of the flue terminal	mm
Horizontal flues		
A	directly below an opening, air brick, opening windows	300
B	above an opening, air brick, opening windows	300
C	horizontally to an opening, air brick, opening windows	300
D	below gutter, drain/soil pipe	25
E	below eaves	25
F	below a balcony or car port	25
G	from vertical drain pipes and soil pipes	25
H	from internal/external corners	25
H*	to a boundary alongside the terminal	300
I	above adjacent ground or balcony level	300
J*	from surface or a boundary facing the terminal	600
L	from opening (door/window) in car port into dwelling	1200
M	vertical from a terminal	1500
N	horizontally from a terminal	300
Vertical flues		
P	from another terminal	600
Q	above roof level	300
R	from adjacent opening window	1000
S	from adjacent wall to flue	300

(*) These dimensions comply with the building regulations, but they may need to be increased to avoid wall staining and nuisance from pluming depending on site conditions.

9.2 Flue configuration description

9.2.1 Horizontal concentric flue Ø 60/100 mm or Ø 80/125 mm (C13 type installation)

DANGER:
If necessary, you must install a terminal protection kit.

Ø 60/100 mm

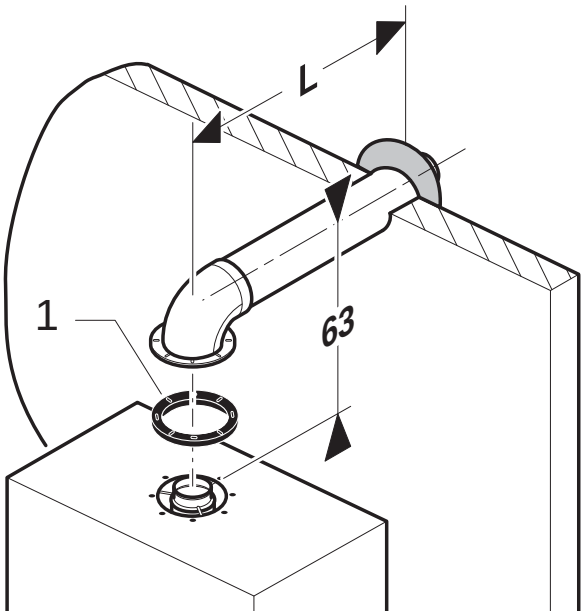

Key
1 Gasket (fitted)

Ø 80/125 mm

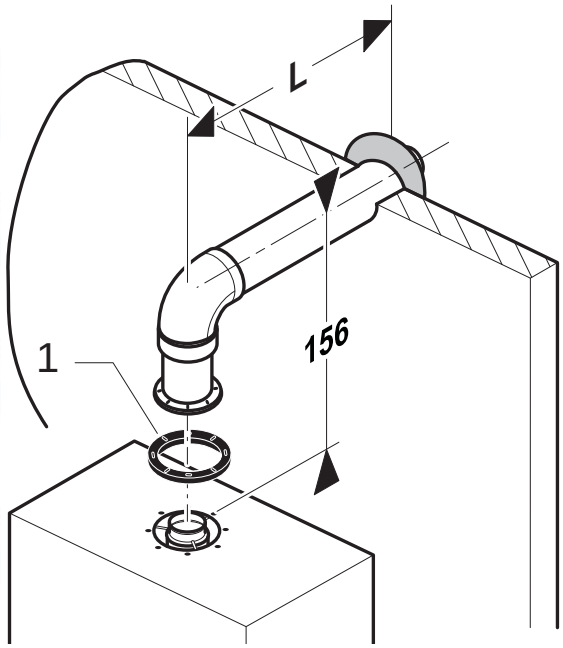

Key
1 Gasket (fitted)

Type	Max length
Ø 60/100	6 m
Ø 80/125	10 m

Each time an additional 90° bend is necessary (or 2 at 45°), the length (L) must be reduced by 1 m.

When using the Plume Management Kit, the maximum lengths flue pipe A and B (60/100mm) are:

A (m)	0.5	1.0	1.5	2.0	2.5	3.0	3.5	4.0	4.5	5.0	5.5
B (m)	5.5	5.0	4.5	4.0	3.5	3.0	2.5	2.0	1.5	1.0	0.5

- Refer to the Plume Management Kit installation manual.

9.2.2 Vertical concentric flue Ø 60/100 mm or Ø 80/125 mm (C33 type installation)

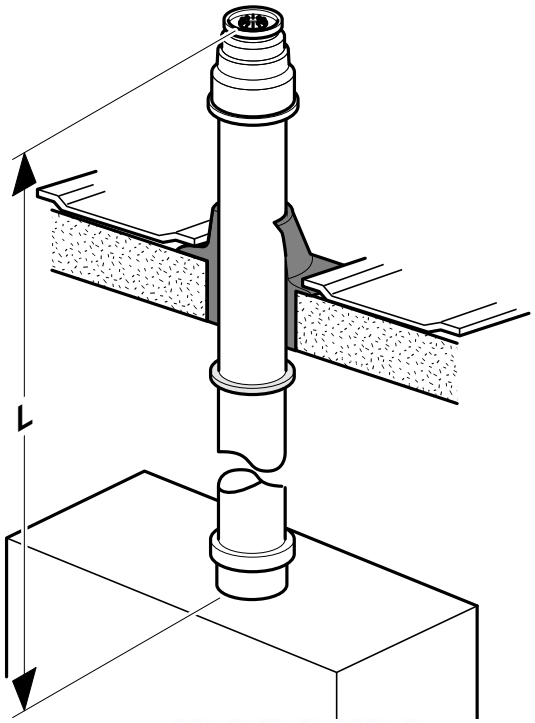

Type	Max length (L)
Ø 60/100	6 m
Ø 80/125	10 m

Each time an additional 90° bend is necessary (or 2 at 45°), the length (L) must be reduced by 1 m.

9.2.3 Multiple boiler chimney flue Ø 60/100 mm (C43 type installation)

ATTENTION:
The flue connecting from the appliance to the flue system must be supplied from the manufacturer of the boiler.

ATTENTION:
C43 flue systems must not be a 'pressurised system' but act under natural draught principles.

ATTENTION:
C43 type flue systems must have their own condensate drain fitted and not allow condensate to mix into other appliances.

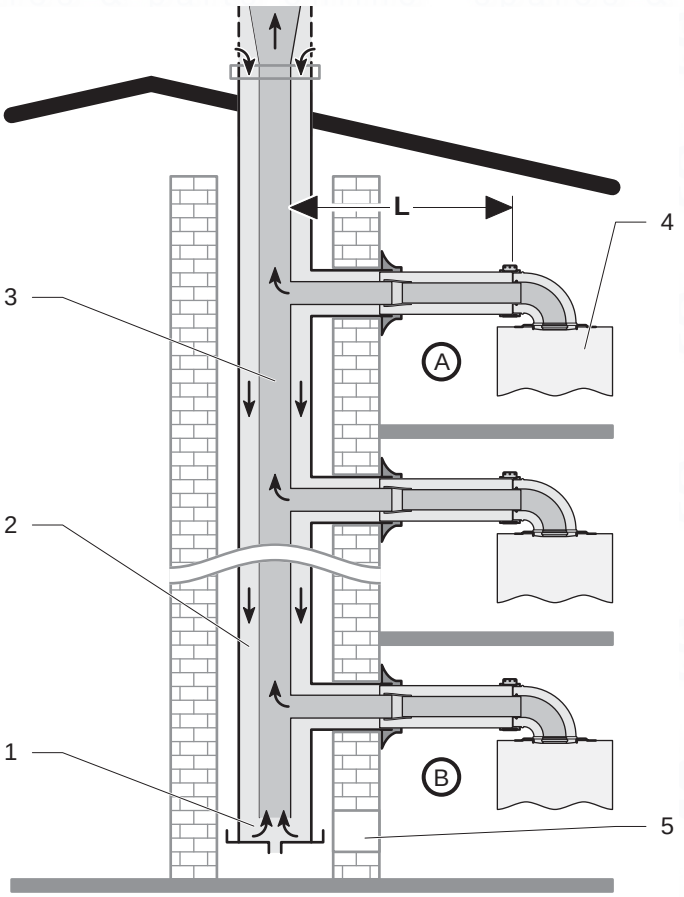

Key
1 Pressure balancing system
2 Air-inlet pipe
3 Collector pipe
4 Boiler
5 Inspection hatch
A Final storey
B Ground floor

Type	Max length (L)
Ø 60/100	10 m

Each time an additional 90° bend is necessary (or 2 at 45°), the length (L) must be reduced by 1 m.

Model	30	35
Exhaust mass rate (g/s)		
At min thermal load (40°C/30°C)	2.9	4.1
At max thermal load (80°C/60°C)	11.3	13.8
Exhaust temperature (°C)		
At min thermal load (40°C/30°C)	42.7	41
At max thermal load (80°C/60°C)	72.9	73.1

10 Electrical connections

DANGER:
Incorrect installation can cause electric shock or appliance damage. The electrical connection of the appliance must be made only by a qualified engineer.

The appliance must be connected directly to an accessible, fixed, switched, electrical outlet.

The external wiring must be earthed, with correct polarity and in accordance with current standards.

The manufacturer declines any responsibility for damages to persons or others caused by the incorrect installation of the appliance earthing. This includes failure to comply with current standards.

Electrical components have been tested to meet the equivalent requirements of the BEAB.

- Do not use cable greater than 10 mm in diameter for the electrical connections.

All system components must be of an approved type.

- Do not interrupt the mains supply with a time switch or programmer.

The boiler is suitable for installation in bathroom zones 2 and 3.

10.1 Access to main board

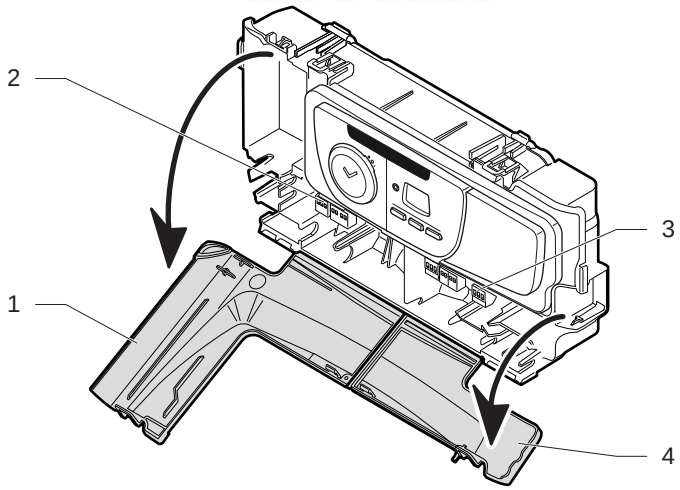

Key
1 24 V access cover
2 Terminal blocks for 24 V connection
3 Terminal blocks for 230 V connection
4 230 V access cover

10.2 Main board

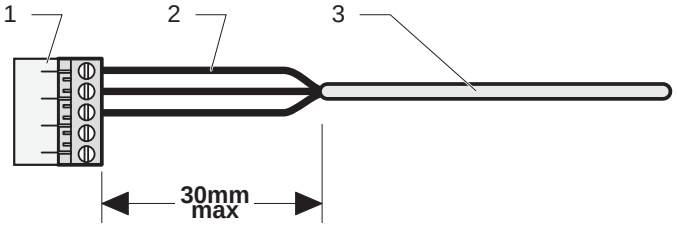

Key
1 Connector
2 Electrical wires
3 Insulation

- Keep a distance of a maximum of 30 mm between connector (1) and the start of the insulation (3).
- Fix the cables in the cable-clamp on the eBox.

10.3 Electrical wiring

Connection of the whole electrical system and any heating system controls to the electrical supply must be through a double poled common switched and fused isolator.

The isolator shall have a contact separation of 3mm on each pole. It should be identified as to its use. Wiring to the boiler must be PVC 850C insulated cable not less than 0.75mm² (24/0.20).

A fused three pin plug and shuttered socket outlet may be used instead of a fused spur box provided that it is not used in a room containing a fixed bath or shower.

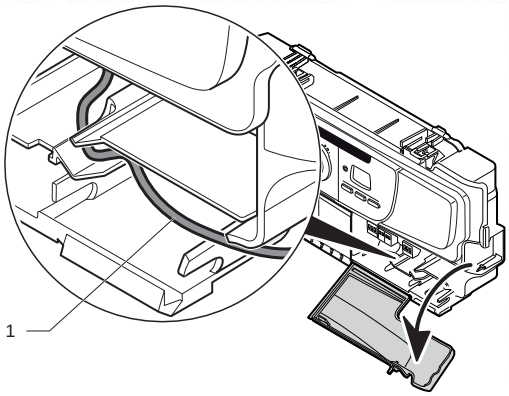

Key
1 Power supply cable

- Connect the appliance's power cable to the 230 V single-phase network + earth.
- Observe correct polarity when connecting the appliance.

10.3.1 230V permanent supply

DANGER:
All cables connected to the appliance should be permanently fixed to the wall.

IMPORTANT:
This appliance will not operate without a link or system controls fitted.

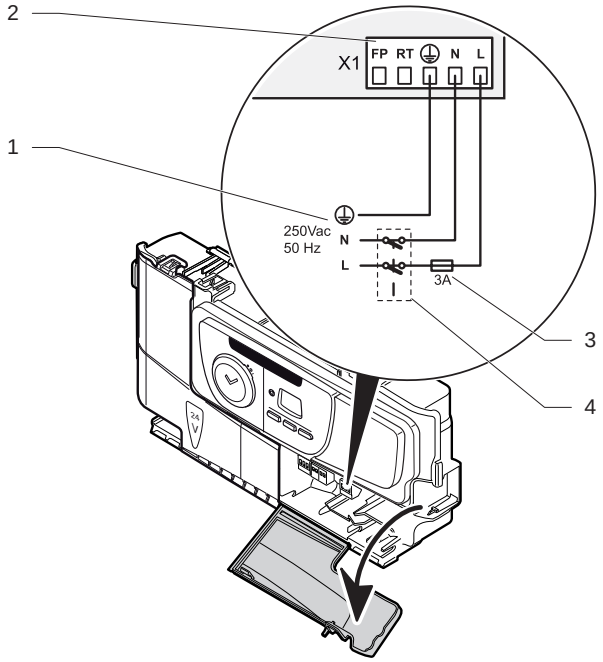

Key
1 230V permanent supply
2 Main board terminal block
⏚ = Mains earth
N = Mains neutral
L = Mains live
3 Fuse
4 Double pole connector

- Connect mains supply as described.

10.3.2 230V permanent supply + 230V system controls

DANGER:
All cables connected to the appliance should be permanently fixed to the wall.

IMPORTANT:
This appliance will not operate without a link or system controls fitted.

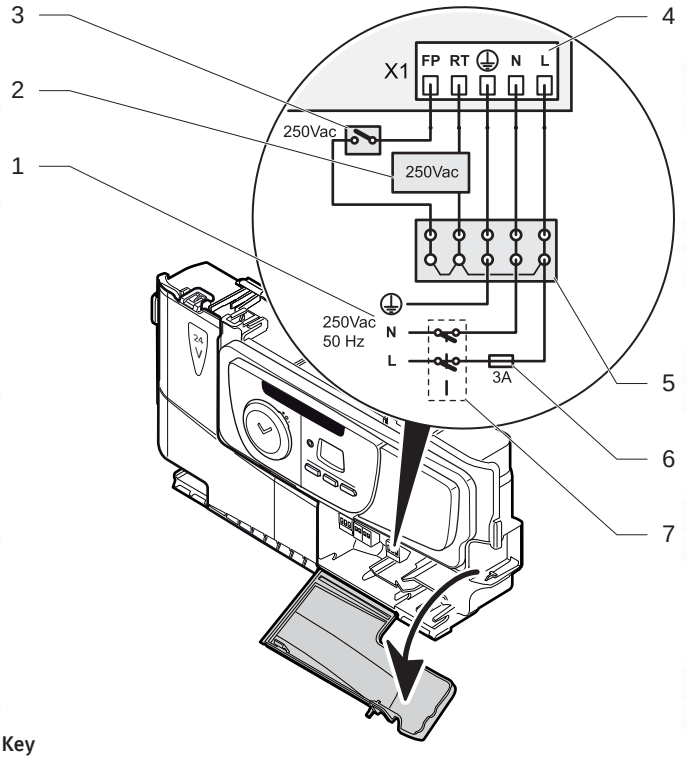

Key
1 230V permanent supply
2 System controls
3 Frost stat
4 Main board terminal block
FP = Frost stat 230V (switchable)
RT = Switch live (230V)
⏚ = Mains earth
N = Mains neutral
L = Mains live
5 Junction box
6 Fuse
7 Double pole connector

- Connect the mains supply and system heating controls e.g. room thermostat as described.
- When installing a 230v controller, the link fitted to the 24v terminals (RT/24v) must be removed.

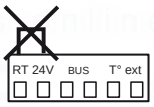

10.4 External accessories

DANGER:
Under no circumstances must any mains voltage be applied to any of the terminals on the 24v connection plug.

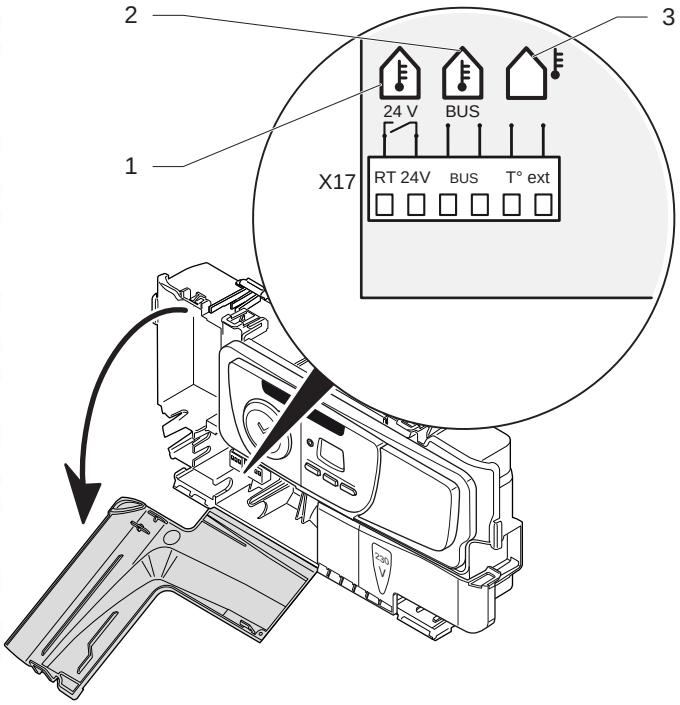

Key
1 24V room thermostat connector
2 Ebus room thermostat connector or Ebus radio receiver
3 Outdoor sensor connector

- Fit external controls in accordance with the rules in force.
- When installing a non eBus controller, the link fitted to the 24V terminals (RT/24V) must be removed.

10.5 Testing the electrical connections

Carry out preliminary electrical system checks as below:

- Resistance to earth (<1 Ohm)
- Short circuit test (L-N)
- Resistance to earth (L-E)
- Polarity check

10.6 Wiring diagram

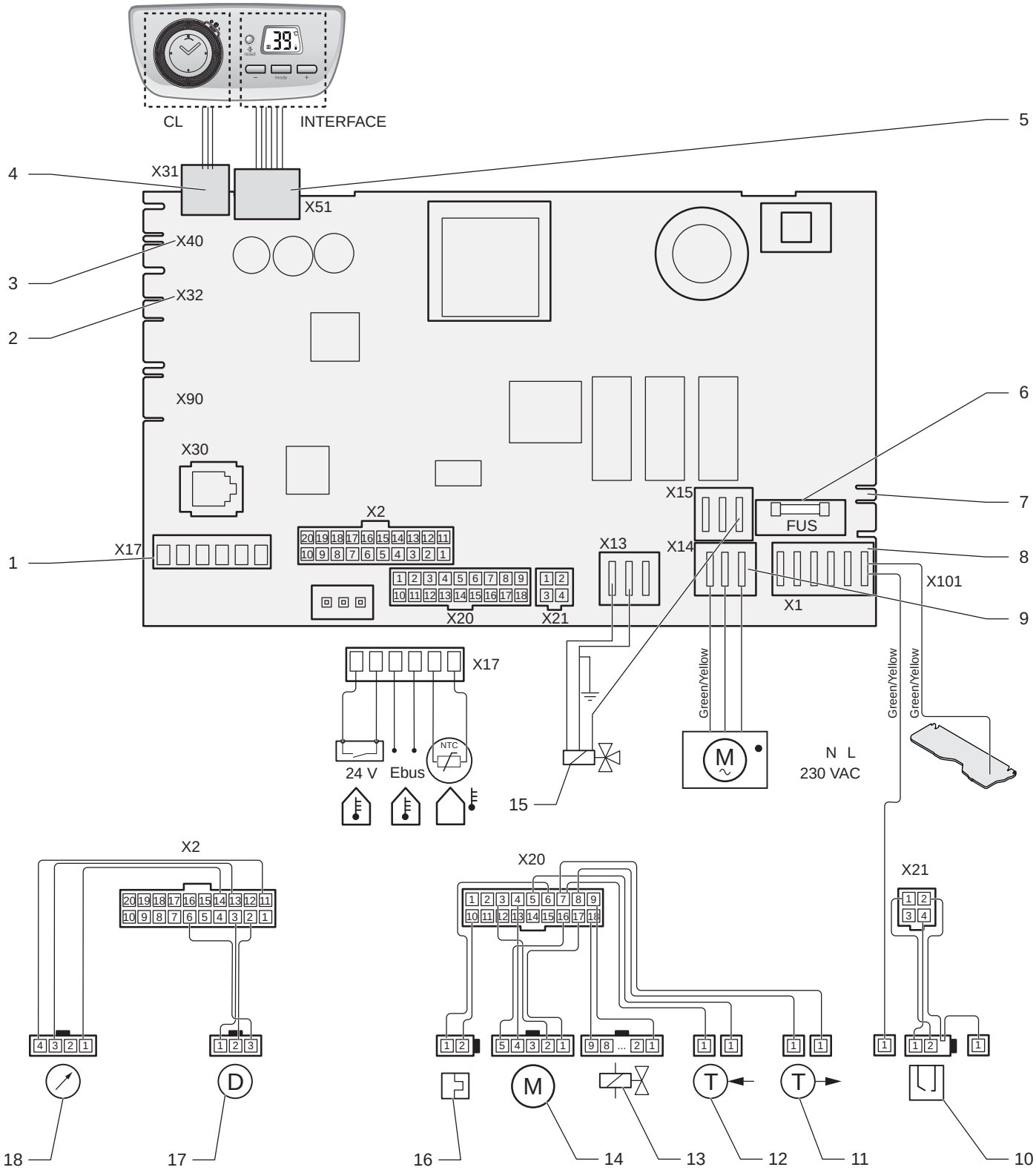

Key

1 Control accessories connector
2 Reserved for future use
3 Location for external accessories (condensate pump and options board)
4 Internal timer
5 User interface
6 Fuse 2A
7 Connector for 230 V option
8 Main supply 230V
9 Pump
10 Combined spark and flame recognition electrode
11 Heating outlet temperature sensor
12 Heating return temperature sensor
13 Gas valve
14 Fan
15 Three way valve
16 Thermal fuse
17 Water flow sensor
18 Water pressure sensor

11 Commissioning

IMPORTANT:
At the time of commissioning, complete all relevant sections of the Benchmark Checklist located in the centre pages of this document.

The commissioning should be carried out by a competent person approved at the time by the Health and Safety Executive and in accordance with the current issue of BS6798.

11.1 Reading the filling pressure

The boiler is equipped with an analogue pressure gauge.

The pressure guage is located behind the front panel of the boiler on the flow pipe. The guage is intended to be used as an installation aid, the guage is not intended to be used by the customer.

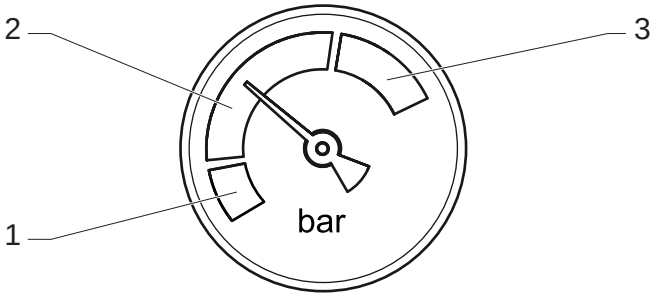

Key
1 White area, pressure too low
2 Grey area, normal operating pressure
3 Red area, pressure too high

To ensure the correct operation of the heating installation, the indicator on the pressure gauge should be within the grey area (2) in approximately the central position as shown in the diagram. This corresponds to a filling pressure of between 0.1 MPa and 0.2 MPa (1.0 bar and 2.0 bar).

11.2 Switching on

- Do not operate the boiler without water.
- Make sure that the system has been thoroughly flushed out with cold water and that all cleanser if used has been removed.
- With the gas service isolation valve closed, with no demand from any external controls and the power supply to the boiler switched off.
- Test for gas tightness and purge air from the gas supply.
- Switch on the power supply to the appliance.
- Make sure that the domestic hot water and heating functions on your appliance are not activated.

11.3 Filling the CH system (Central heating)

- Make sure that the installation's cold water inlet isolating valve is open.
- Open the isolating valves located on the connections: they must be positioned in the direction of the flow.

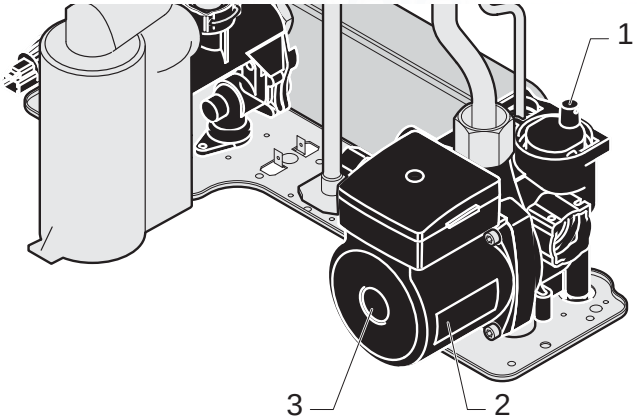

Key
1 Air vent
2 Pump
3 Screw for the pump shaft

- Open the plug on the air vent located on the pump and automatic air vents on the installation.

If the (CH.) pressure falls below 0.4 bar, the display will flash the current pressure and the boiler will not operate. To increase the pressure, the CH circuit requires " Topping up".

IMPORTANT:
When turning the 230Vac supply on to the boiler should the water pressure be less than 0.5 bar an automatic air vent function will be activated for a period of 5 minutes. During this time the pressure should be increased and air vented from the system. Note that the burner will not fire in either the CH or DHW mode and the display will blink displaying the current water pressure.

- Vent air from each radiator until the water flows normally, then close the vents.
- Leave the pump's air vent open.

IMPORTANT:
The following two operations will unblock the pump's engine after a prolonged storage period and will purge the air from the pumps circuit.

- Remove the screw from the pump shaft and introduce a flat screwdriver. A trickle of water, under no pressure should normally come out of the pump.
- Rotate the pump's shaft through several turns, then replace the screw.

11.4 Filling DHW Circuit

- Open the various hot water taps to fill the DHW circuit.

11.5 Filling the Condensate Trap

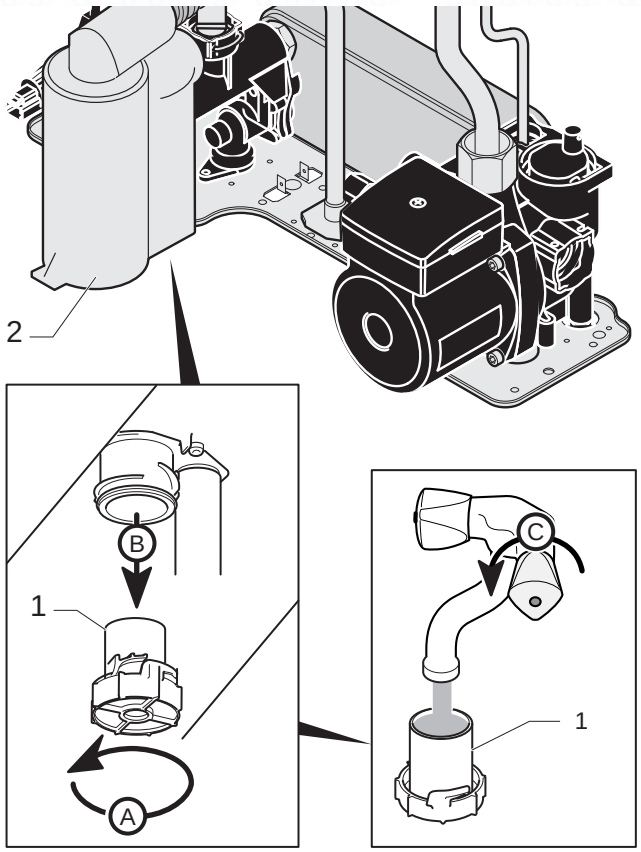

Key
1 Filling trap
2 Condensate trap

- Fill the trap with water (1).
- Activate the Heating and Domestic Hot Water functions.
- Run the appliance for at least 15 minutes, with a heating temperature set to greater than or equal to 50°C (not applicable for an installation with underfloor heating).
- Vent air from each radiator again until the water flows normally, then close the vents.
- If you have difficulties in removing the air, launch the air-removal programs in the heating circuit (see the chapter ("Technical settings for the appliance and list of parameters").
- Make sure that the pressure indicator shows a value of 0.8 bars; otherwise, fill the appliance again.

11.6 Initial lighting

11.6.1 Control

IMPORTANT:
The combustion for this appliance has been checked, adjusted and preset at the factory for operation on natural gas (G20) as defined on the appliance data label.
No measurement of the combustion is necessary.Should the appliance require to be converted to LPG gas ensure you follow the gas conversion section before lighting the boiler.

- Check that the appliance has been installed in accordance with the instructions.
- Check the integrity of the flue system and flue seals.
- Check the integrity of the appliance combustion circuit and relevant seals.
- Check that all internal/external controls are calling for heat.
- Check that the gas service isolation is open.
- To adapt the appliance to another type of gas, see chapter "LPG conversion".

11.6.2 Adjusting the temperature

- Light the appliance by following the procedure below.
- Select the "Heating + domestic hot water" function by pressing the “Mode” button repeatedly to scroll through your options until are shown.

The appliance will enter a self checking routine, then the fan will start and the ignition sequence commence. The boiler, if necessary, will automatically repeat the ignition sequence a further 4 times.

If the burner fails to ignite “F28” will be displayed, initially, this may be due to air in the gas supply line. Press the reset button. Do not use the reset button to purge the installation - never press reset more than 3 times.

- Select the heating function only by pressing the "mode" button repeatedly (is shown only).
- Press ⊕ or ⊖ buttons to adjust.
- Select the hot water function only by pressing the "mode" button repeatedly (is shown only).
- Press ⊕ or ⊖ buttons to adjust.
- Check that hot water is available at all taps, then close.
- Return the appliance to the correct mode by pressing "mode" button unit the desired functions are activated.

11.7 Gas rates

The supply from the governed meter must be of adequate size to provide a steady inlet working pressure of 20mbar (8in wg) at the boiler.

- On completion, test the gas installation for tightness using the pressure drop method and suitable leak detection fluid, purge in accordance with the above standard.

IMPORTANT:
Due to the modulating operation of the boiler and the need to check the gas inlet pressure and measure the gas rate at maximum rate, it will be necessary to force it to maximum.

- Activate the test mode "P.01" and set the value to HI in order to force the burner at P. max. See chapter "Specific adjustment › Appliance technical settings and parameter list › Test modes".

11.7.1 Operational Gas Inlet Pressure

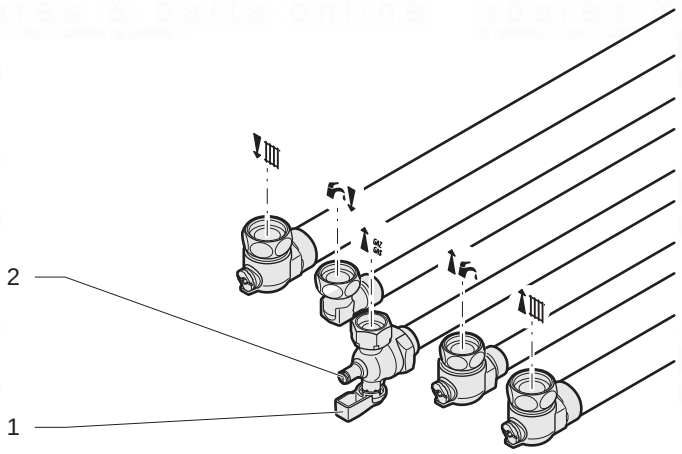

Key
1 Gas service isolation valve
2 Test point

- With all other gas appliances operating, check the operational supply pressure at the gas service isolation valve test point.

The nominal supply pressure for Natural Gas (G20) is 20mbar.
The nominal supply pressure for LPG (G31) is 37mbar.

- Turn the taps and appliances off, then disconnect the pressure gauge.

Additionally the safe nominal maximum heat input of the appliance can be achieved at an inlet pressure down to 15mbar.

IMPORTANT:
The burner pressure cannot be measured and is not used to measure the gas rate.

11.7.2 Gas Rate

- Make sure that all other gas burning appliances and pilot lights are off.
- Check the gas rate using the gas meter test dial and stop watch, at least 10 minutes after the burner has lit, see table below for approximate rates.

Model	Gas rates (G20) (approx) after 10 mins from cold				Gas rates (G31)	
	MIN		MAX		MIN	MAX
	m^3/h	ft^3/h	m^3/h	ft^3/h	kg/h	kg/h
30	0.65	22.9	3.24	114.4	0.47	1.94
35	0.92	32.5	3.77	133.1	0.67	2.37

In communal or LPG installations where the gas rate cannot be measured it is acceptable to measure the combustion rate as described in the servicing section.

- On completion, press the "reset" button to reset the boiler.
- Gas rates for both central heating and hot water can be verified using the test program P.03 and P.01 respectively.

11.8 Testing heating system

- Ensure that the external controls and programmer are calling for heat.
- Fully open all radiator valves, see chapter "Appliance installation › Recommendations before installing › Heating circuit design".
- Activate the C.H. function on the appliance's control panel.
- Balance the radiators as required to give the required system differential.
- Turn off all radiators that can be shut off by the user and check to see if less than the maximum differential allowed of 20°C can be achieved across flow and return.

IMPORTANT:
Should the appliance require adjustment refer to the "Specific adjustment" section overleaf.

- Allow the system to reach maximum temperature then switch off the boiler by isolating from the electrical supply.
- Drain the entire system rapidly whilst hot, using the drain taps at all the low points of the system. Fill and vent the system as described previously in chapter "Commissioning › Filling the CH system (Central heating)".
- Adjust the boiler temperature controls and any system controls to their required settings.

11.9 Testing domestic hot water system

- Open a hot-water tap.
- Check that the temperature obtained is compliant with the setting on the appliance.

11.10 Completion

- Ensure that the magnetic lighting instruction label is placed on the surface of the boiler casing.

GB: It is a requirement that the “Benchmark” Installation, Commissioning and Service Record is completed and left with the user.

IE: it is necessary to complete a “Declaration of Conformity” to indicate compliance to I.S.813. An example of this is given in the current edition of I.S.813.

12 Specified Adjustment

12.1 Heating circuit adjustment

By pass operation is automatic and not adjustable.

- If necessary, fit an external by-pass.

ULTIMATE 30c

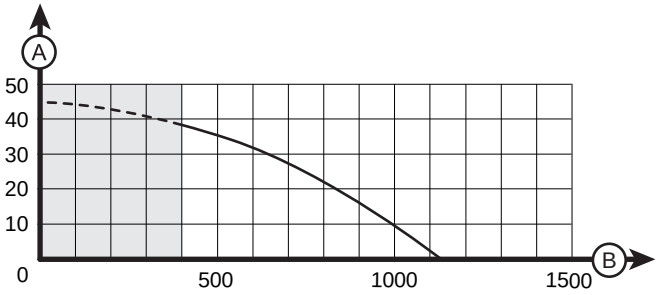

Key
A Available pressure between heating flow and return (kPa)
B Heating circuit flow rate (l/h)

ULTIMATE 35c

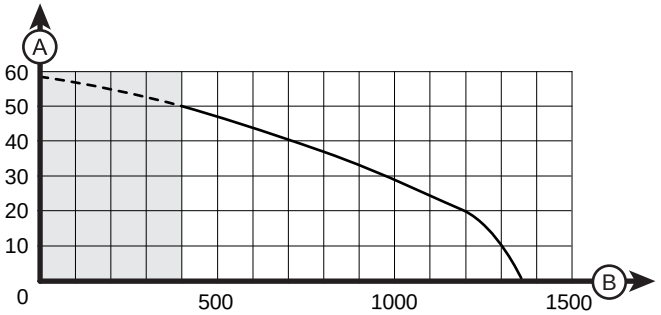

Key
A Available pressure between heating flow and return (kPa)
B Heating circuit flow rate (l/h)

12.2 Installation settings

- Push in and hold the (mode) button for more than 7 seconds to access the configuration menu. The screen displays "0".
- Press the ⊖ button 4 times. The screen displays "96". This is the installer's password.
- Press (mode) to validate. The screen displays a flashing and alternating "d." and "00".
- Press ⊕ or ⊖ button to access the parameter to modify.
- Press (mode) button to modify the value of the parameter and select with the ⊕ or ⊖ keys.
- Press (mode) button to confirm and save the changes.
- Press and hold the (mode) button for more than 7 seconds to exit.

Code	Parameter	Unit	Description	Factory setting	Modifiable parameter
d.00	Maximum heating power	kW	Choose a value: ULTIMATE 30c › 6 to 25 and ULTIMATE 35c › 8 to 30.	25 (ULTIMATE 30c) 30 (ULTIMATE 35c)	yes
d.01	Pump over-run time - heating	min	Choose a value between 2 and 60	5	yes
d.20	Maximum temperature setting for domestic hot water	°C	The recommended maximum temperature setting for DHW is 60°C. Choose a value suitable for your needs.	60	yes
d.34	Speed of fan	rpm	Fan speed is displayed between 0 and 99. Multiply the display value by 100.	-	no
d.36	Domestic hot water flow	l/ min.	Display domestic hot water flow.	-	no
d.40	Heating flow temperature	°C	Display the heating flow temperature.	-	no
d.41	Heating return temperature	°C	Display the heating return temperature.	-	no
d.43	Heating curve	K	See the instructions for the external sensor connected to the appliance.	1.2	yes
d.47	Exterior temperature	°C	Display the temperature measured by the external sensor.	-	no
d.67	Time remaining before the end of the anti-cycle in heating mode.	min.	Display the time remaining before the end of the anti-cycle	-	no
d.71	Maximum temperature setting for heating outlet	°C	Select a value between 50°C and 80°C.	75	yes
d.90	Detection of eBUS controller	-	0 = Not detected 1 = Detected	-	no

12.3 After Sales Service settings

- Press and hold the (mode) button for more than 7 seconds to access the configuration menu. The screen displays "0".
- Press ⊕ or ⊖ button and enter the After Sales Service password.
- Press (mode) to validate. The screen displays a flashing and alternating "d." and "00".
- Press ⊕ or ⊖ button to access the parameter to modify.
- Press (mode) button to modify the value of the parameter and select with the ⊕ or ⊖ keys.
- Press (mode) button to confirm and save the changes.
- Press and hold the (mode) button for more than 3 seconds to exit the configuration menu.

Code	Parameter	Unit	Description	Factory setting	Modifiable parameter
d.08	Current state of the 230V room thermostat	-	230V room thermostat : 0 = open (no heating), 1 = closed (heating mode).	-	no
d.09	Flow temperature set point from external eBus control	°C	External eBus set value.	-	no
d.10	Heating pump status	-	0 = off 1 = on	-	no
d.16	Current state of the 24V room thermostat	°C	0 = open (no heating), 1 = closed (heating mode)	-	no
d.17	Flow or Return temperature control	°C	Temperature regulation on flow (radiator) or return (under-floor heating) temperature sensor.	0	yes
d.22	DHW demand active (tapping)	-	0 = off 1 = on	-	no
d.23	Central heating mode	-	0 = CH not available (summer mode) 1 = CH available (winter mode)	-	no
d.33	Speed setpoint of fan	rpm	Fan speed is displayed between 0 and 99. Multiply the displayed value by 100.	-	no

Code	Parameter	Unit	Description	Factory setting	Modifiable parameter
d.44	Digitalized ionisation voltage	V	Display the digitalized ionisation voltage. Multiply the displayed value by 100.	-	no
d.68	Unsuccessfull ignitions at first attempt	-	Display the number of unsuccessfull ignitions at first attempt.	-	no
d.69	Unsuccessfull ignitions at second attempt	-	Display the number of unsuccessfull ignitions at second attempt.	-	no
d.80	Operating hours in heating mode	h	Display the number of operating hours in heating mode. Multiply the displayed value by 100.	-	no
d.81	Operating hours in domestic hot water mode	h	Display the number of operating hours in domestic hot water mode. Multiply the displayed value by 100.	-	no
d.82	Number of burner starts in heating mode	-	Display the number of burner starts in heating mode. Multiply the displayed value by 100.	-	no
d.83	Number of burner starts in DHW mode	-	Display the number of burner starts in DHW mode. Multiply the displayed value by 100.	-	no
d.93	Device Specific Number	-	Select the product code of the appliance:	30 -> 5 35 -> 6	yes
d.96	Factory reset	-	All parameters stored in EEPROM (main board + appliance interface) are reset to factory settings if this function is activated. 0 = deactivated 1 = activated	0	yes

12.4 Status of the appliance

- Press ⊖ button for more than 3 seconds to learn the current state of functioning of the appliance.
  The screen displays "S" and the state of the appliance.

- Press and hold the (mode) button for more than 3 seconds to exit this menu.

Status	Heating Mode
S.00	No request for heating
S.01	Pre-run fan
S.02	Pre-run pump
S.03	Ignition
S.04	Burner lit
S.05	Post run pump/fan
S.06	Post run fan
S.07	Post run pump
S.08	Time delay anti short-cycles after heating
Status	**Domestic hot water mode**
S.10	Request for domestic hot water
S.11	Pre-run fan
S.13	Ignition
S.14	Burner lit
S.15	Post run pump/fan
S.16	Post run fan
S.17	Post run pump

Status	Specific messages
S.30	Default status, no request for heating or domestic water. If an EBUS controller is connected to the boiler, check that a wiring link is present on terminals 3 and 4 of the boiler's main board.
S.31	"Hot water only" mode
S.32	Control cycle: the speed of the fan in the functioning phase is outside tolerance.
S.34	"Frost protection" mode
S.41	Water pressure too high
S.53	Waiting cycle: temperature differential between heating flow and return is too high. If ΔT › 30, forcing to Pmin.
S.54	Waiting cycle: lack of water in the installation/temperature rise between heating flow and return is too high.
S.96	Test temperature sensor for heating return.
S.98	Test temperature sensors for heating flow and return, or the appliance has a fault.

12.5 Test modes

By activating these various test modes, you can enable special functions on the appliance.

- Press the on/off button to switch off the appliance.
- While keeping the button (mode) pressed for more than 5 seconds, press the on/off button.
  The screen displays the first test mode "P1" and "Off".
- Press ⊕ or ⊖ button to choose the test mode that you wish to launch.
- Test mode "P1" :
- Press (mode) button to display the burner forcing setting. The screen displays "P1" and "Lo".
- Press on ⊕ or ⊖ button to modify the value of the setting from "Lo" (0%) to "Hi" (100%).
- Press on (mode) button for 1 second to exit the submenu or for more than 7 seconds to access the configuration menu.
- Test mode "P.02" to "P.07" :
- Press (mode) to launch the test mode. The screen displays "PX" and "On".
- The test mode will be automatically stop after 15 minutes.
- When you have finished, press the reset button to exit the test modes.

Code	Parameter	Description
P.01	Forcing the adjustable-power burner when heating	The appliance functions at a power adjustable from "Lo" (Lo = Pmin.) to "Hi" (Pmax.) by using buttons ⊕ or ⊖ after successful ignition.
P.02	Forcing the burner to heating ignition power	The appliance functions at ignition power after successful ignition.
P.03	Forcing the burner to Heating Pmax.	The appliance functions at its maximum power after successful ignition.
P.06	Venting the installation	The function is activated for a period of 5 minutes on the heating circuit. Make sure that the air vent is open.
P.07	Venting the appliance	The function is activated for a period of 5 minutes on the short circuit. Make sure that the air vent is open.

12.6 CO_2 measurement

The combustion for this appliance has been pre-set at the factory for operation on Natural Gas G20 as defined on the appliance data label.

No adjustment of the combustion is necessary.

If you wish to check the combustion then follow the instructions in the Servicing section.

12.7 Re-check and restart

- Once the appliance is installed, check the operation of the appliance.
- Start the appliance to ensure that any adjustments operate correctly and check that the appliance operates safely.
- Check the gas-tightness and water-tightness of the appliance and eliminate any leaks.
- Check that the flue joints are tested for tightness and fitted in accordance with the instructions.
- Check the entire control and safety system, its settings and its operation.

13 User information

At the end of the installation, the installer must:

- explain the operation of the appliance and its safety devices to the user, if necessary provide a demonstration and answer any questions;
- hand over to the user all the required documentation,
- fill in the documents where necessary;
- advise the user of the precautions necessary to prevent damage to the system, appliance and the building;
- remind the user to service the appliance annually.
- Draw attention, if applicable, to the current issue of the Gas Safety (Installation and Use) Regulations, Section 35, which imposes a duty of care on all persons who let out any property containing a gas appliance in the UK.

The user shall not interfere with or adjust sealed components.

It is the Law that any servicing is carried out by a competent person approved at the time by the Health and Safety Executive.

- Advise the user that, like all condensing boilers this appliance will produce a plume of condensation from the flue terminal in cool weather. This is due to the high efficiency and low flue gas temperature of the boiler.
- Advise the user that the permanent mains electrical supply should not be switched off, as the built in frost protection and pump exercise program will not operate.
- Advise the User if the mains electricity and gas are to be turned off for any long periods during severe weather, it is recommended that the whole system, including the boiler, should be drained to avoid the risk of freezing.

IMPORTANT:
Sealed system: The system must be refilled and to the correct pressure as indicated in these instructions

- Leave these instructions and the 'Benchmark' Installation, Commissioning and Service Record with the user.

MAINTENANCE

To ensure the continued efficient and safe operation of the boiler it is recommended that it is checked and serviced at regular intervals. The frequency of servicing will depend upon the particular installation and usage, but in general once a year should be enough.

It is the Law that any servicing is carried out by a competent person approved at the time by the Health and Safety Executive.

- Before commencing with a service or replacement of parts isolate the boiler from the electrical supply and turn off the gas supply at the gas isolation valve.
- When replacing a part on this appliance, use only spare parts that you can be assured conform to the safety and performance specification that we require. Do not use reconditioned or copy parts that have not been clearly authorised by Glow-worm.
- If any electrical connections have been disconnected and after their connection, checks to the earth continuity, polarity, short circuit and resistance to earth must be repeated using a suitable multimeter, as described in chapter "Trouble-shooting › Fault diagnosis › Check the electrical installation".
- After servicing, complete the relevant Service Interval Record section of the Benchmark Checklist located in the back pages of this document.

14 Trouble-shooting

14.1 Fault diagnosis

The following checks should be performed before proceeding onto specific diagnostics:

- Make sure that the electricity supply has not been interrupted and that the appliance is connected correctly (See chapter "Trouble-shooting › Fault diagnosis › Check the electrical installation")
- Check the appliance's gas supply (See chapter "Trouble-shooting › Fault diagnosis › Check the gas supply").
- Ensure that the isolating valves are open.
- Ensure that the pressure indicator displays a value of 0.8 bar (if the pressure falls below 0.4 bar, the air vent function will run automatically for a period of 5 minutes until you see 0.5 bar on the pressure indicator). If not, fill the appliance.
- Check that all external controls are connected correctly.
- If the symbol is displayed on the screen, display the fault code memory (see chapter " Trouble-shooting ›Fault memory").
- Press the reset button to restart the appliance.
- Check the functional flow diagram.

14.1.1 Check the electrical installation

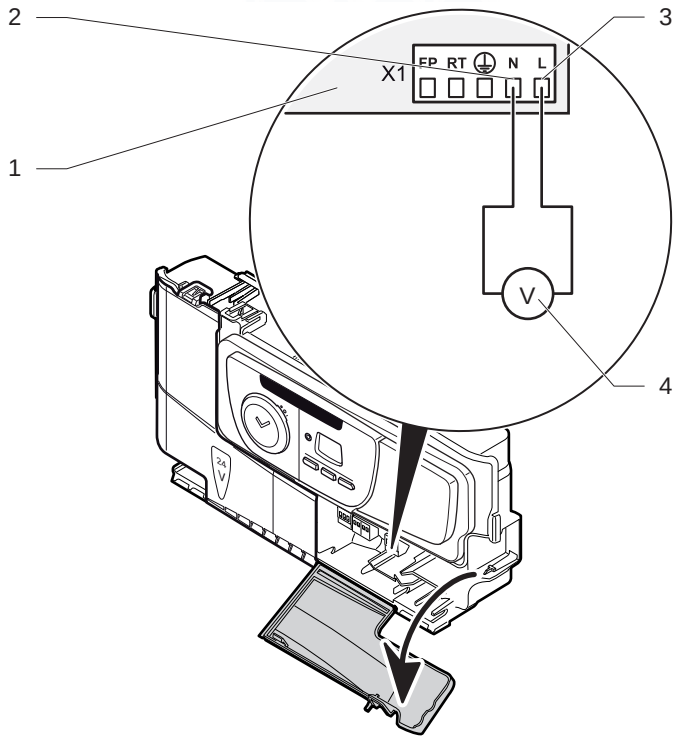

Key
1 Main board
2 Neutral
3 Live
4 Multimeter

- Remove the front casing panel
- Check the external electrical supply to the boiler is on and a supply of 230V is present at the 'L' and 'N' terminals on the main board.
- Check the electrical installation and appliance, carry out tests for earth continuity, polarity, short circuit and resistance to earth, using a suitable multimeter.
- Bare metal points such as screws or rivets will act as suitable earth check points on the appliance.

14.1.2 Check the gas supply

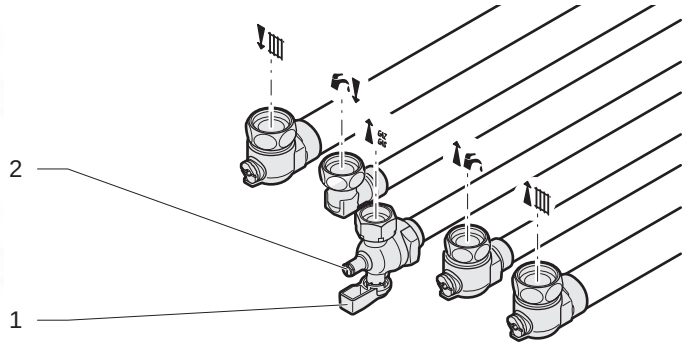

Key
1 Gas service isolation valve
2 Test point

- Check that there is a gas supply to the boiler and the gas service isolation valve is turned on.
- Check pressure at the gas service isolation valve.

14.2 Fault memory

- This menu allows you to display the 10 most recent failure codes registered by the appliance.
- In order to display the fault code memory, simultaneously press the buttons ⊕ and ⊖ for more than 7 seconds.
- The screen will display the first fault "1." (record) and after "XX" (fault code).
- To display the other faults registered by the appliance, press the button ⊕ or ⊖ .
- Press button (mode) for more than 3 seconds to exit this menu.
- To erase the fault memory registered by the appliance, consult the “Installation adjustments” chapter and use code “d.94”.

14.3 Fault codes

IMPORTANT:
The faults described in this chapter should be carried out by a qualified engineer and if needed by the After Sales Service.

Fault codes	Description	Cause	Solution
F00	Flow heating temperature sensor fault	Sensor open circuit	• Check the sensor’s connections. • Check the wiring harness. • Check the sensor.
F01	Return heating temperature sensor fault	Return heating temperature sensor disconnected	
F10	Flow heating temperature sensor fault	Sensor short-circuit	
F11	Return heating temperature sensor fault	Return heating temperature sensor shorted.	
F20	Overheating fault	Overheating safety device activated (97°C)	• Check the operation of the pump. • Check the wiring harness. • Check that the flow and return heating isolation valves are open.
F22	Water pressure of the installation (‹0.3 bar)	Return water valve closed Pump disconnected Leak in the installation	• Fill the installation. • Purge the installation. • Check the pump connections. • Check the flow and return heating sensor connections. • Check that there are no leaks.
F23	Maximum temperature difference reached between return and flow heating	Water circulation fault	• Check the flow and return heating sensor connection. • Check the pump speed.
F24	Water circulation fault	Malfunction of the pump (excessively rapid temperature increase)	• Check that the flow and return heating isolation valves are open.
F26	Fault in gas valve motor.	Disconnected or defective cables	• Check the gas valve connections. • Check the operation of the gas valve. • Check the operation of the condensate pump (option).
F27	Flame detection fault.	Abnormal flame detection	• Check the flame detection electrode. • Check the main board. • Check the igniter unit.
F28	Ignition fault	No return gas / Insufficient gas flow Gas valve incorrectly adjusted Defective firing electrode and flame control / Defective igniter unit	• Check the return gas circuit (gas valve open). • Check the observe the flame picture and check the CO_2 setting. • Check the igniter unit connections. • Check the state of the electrode (corrosion).
F29	Loss of flame during operation		
F32	Incorrect air pressure	Incorrect fan speed.	• Check the entire flue system. • Check the fan’s electrical connections.
F49	EBUS voltage fault	Fault in EBUS line Short circuit in EBUS connector	• Check that the eBus controls are fitted and wired correctly.

Fault codes	Description	Cause	Solution
F61	Fault in the main board	Gas valve command fault	• Check the main boards connections. • Check the main board. • Check the appliance DSN number is correct. • Reset the appliance.
F62		Gas valve closure fault	
F63		Fault in the main board memory	
F64		Rapid fluctuation of return or flow heating sensor.	
F65		Excessive main board temperature	
F67		Flame signal fault in the main board	
F68	Fluctuation of flame signal	No return gas / Insufficient gas flow Gas valve incorrectly adjusted Defective firing electrode and flame control / Defective igniter unit	• Check the return gas circuit (gas valve open). • Check the observe the flame picture and check the CO_2 setting. • Check the igniter unit connections. • Check the state of the electrode (corrosion).
F70	User interface incompatible with the main board	Incorrect product code	• Check that the appliance DSN code on the screen matches the product code of the nameplate (in the event of a fault and the appliance DSN does not appear, consult menu.d.93 reserved for the code). • Check the boards reference.
F71	Flow heating temperature sensor fault	Flow heating temperature sensor unclipped or defective (no temperature variation)	• Check the sensor connections. • Make sure that the sensor is clipped to the tube.
F72	Permanent temperature difference between flow and return heating sensors	Mismatch between the flow and return heating temperatures (permanent difference)	• Check temperature sensors connections. • Replace faulty sensors.
F73	Heating circuit pressure sensor fault	The sensor is shorted or disconnected.	• Check the sensor's connections. • Check the sensor.
F74	Heating circuit pressure sensor fault	Fault in pressure sensor	
F76	Thermal fuse fault	Thermal fuse disconnected Defective thermal fuse	• Check the fuses connections. • Replace the heat exchanger.
F77	Fault in gas valve motor.	Defective gas valve. Defective condensate pump (option)	• Check the gas valve connections. • Check the operation of the gas valve. • Check the operation of the condensate pump (option).
F83	No water in the installation : the temperature does not increase when the burner is lit	Return water valve closed Pump disconnected Leak in the installation	• Fill the installation. • Purge the installation. • Check the pump connections. • Check the flow and return heating sensor connections. • Check that there are no leaks.
F84	Permanent temperature difference between flow and return heating sensors	Inverted or disconnected flow and return heating temperature sensors Defective temperature sensors	• Check temperature sensors connections. • Replace faulty sensors.
F85	Flow and return heating sensors fault	Flow and return heating temperature sensor connected to same tube	• Check temperature sensors connections.
F86	Underfloor heating contact fault	Floor heating contact open Sensor disconnected or defective	• Check the sensor connections. • Check that the sensor is connected to the main board and the shunt is removed.
Err	User interface fault	Defective user interface	• Check connection from user interface PCB to main PCB. • Replace user interface.

14.4 Functional flow diagram

14.4.1 Central Heating

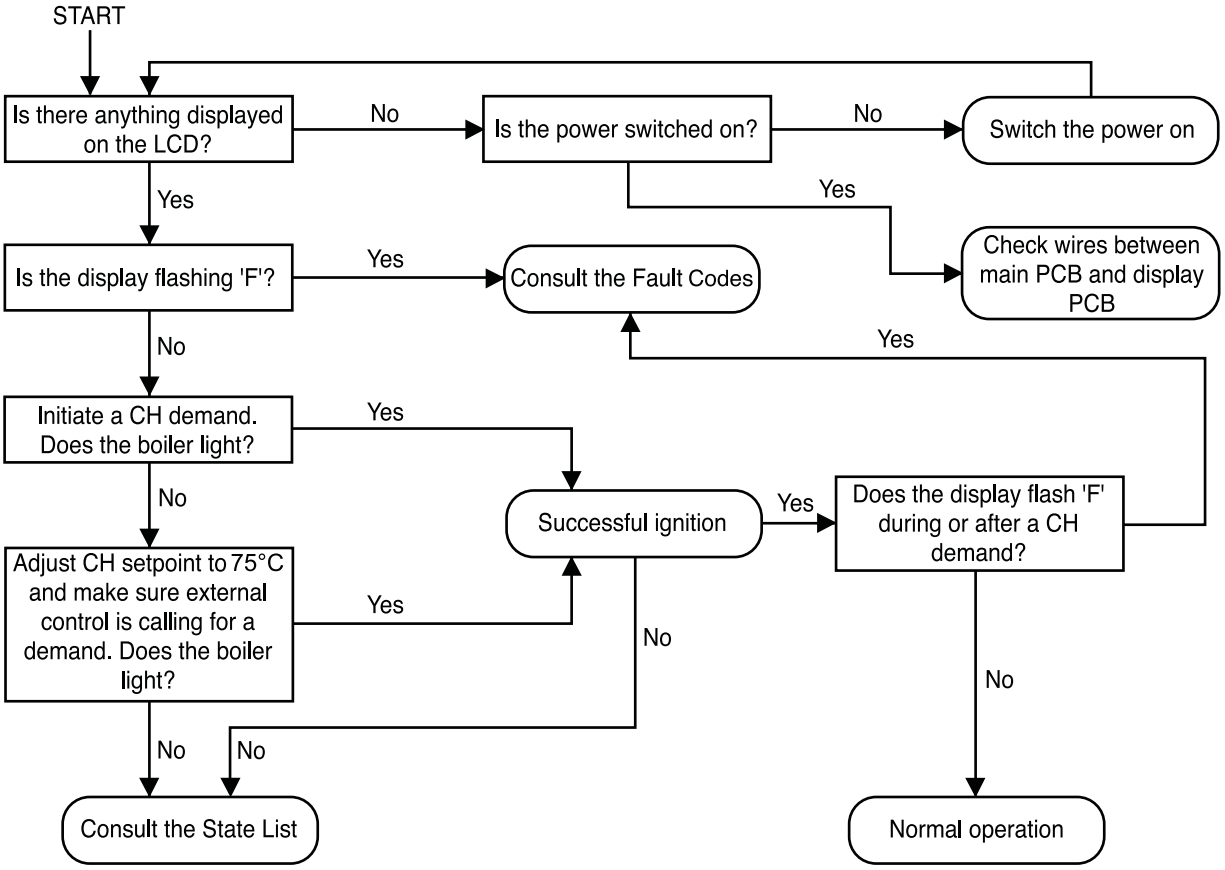

14.4.2 Domestic Hot Water

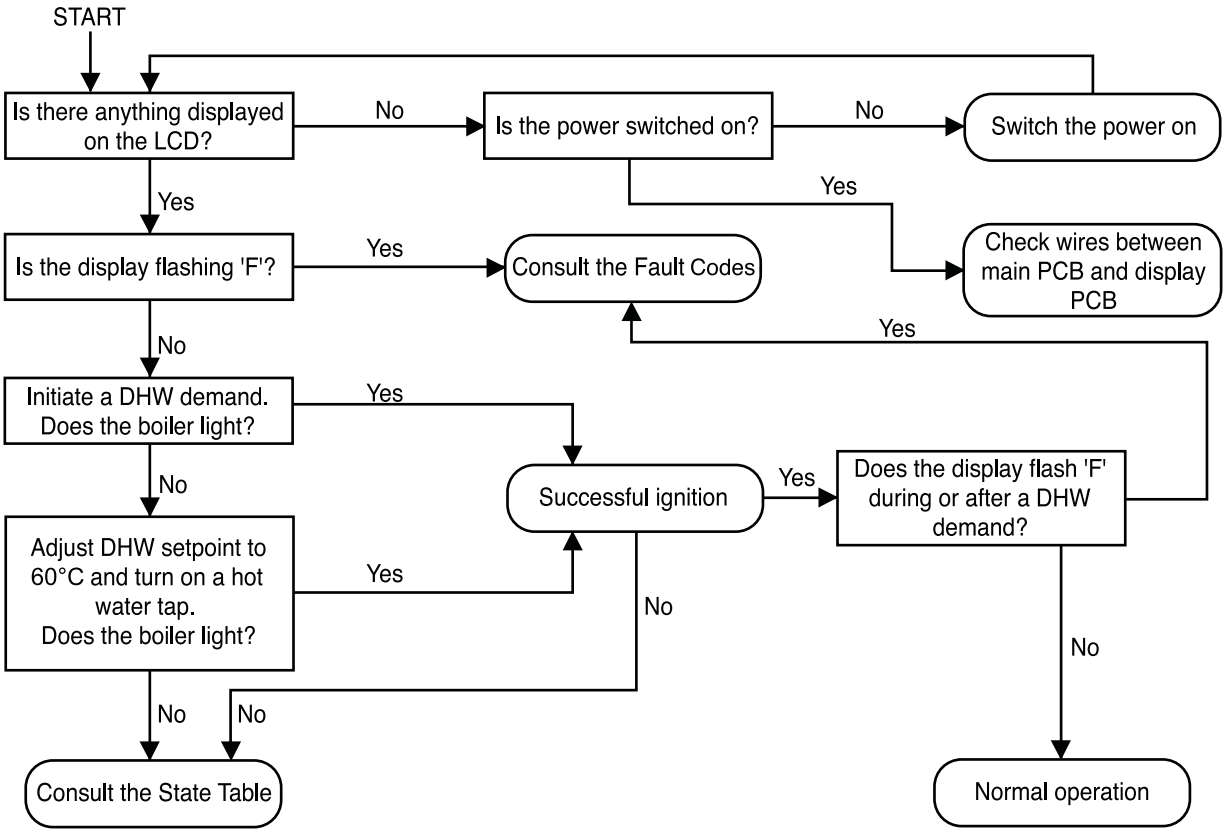

15 Gas conversion adjustments

In order to adjust the appliance to a different gas that it is set to in production.

This conversion should only be carried out by a competent person approved at the time by the Health and Safety Executive.

- During the conversion to Propane, use of a suitable flue gas analyser is necessary.

The person carrying out a combustion measurement should have been assessed as competent in the use of a flue gas analyser and the interpretation of the results. The flue gas analyser used should be one meeting the requirements of BS7927 or BS-EN50379-3 and be calibrated in accordance with the analyser manufacturers' requirements. Competence can be demonstrated by satisfactory completion of the CPA1 ACS assessment, which covers the use of electronic portable combustion gas analysers in accordance with BS 7967, parts 1 to 4.

15.1 Settings

IMPORTANT:
Steps "Switching on" to "Re-pressurising System" will need to be completed before the appliance can be converted (See chapter "Commissioning").

Tools required to make the conversion are a 4mm Allen key and an electricians screwdriver.

Having checked :

- the appliance and system have been installed in accordance with the instructions.
- the integrity of the flue system and flue seals....
- the integrity of the appliance combustion circuit and relevant seals....
- that all internal/external controls are calling for heat.
- the gas service isolation valve is opened.

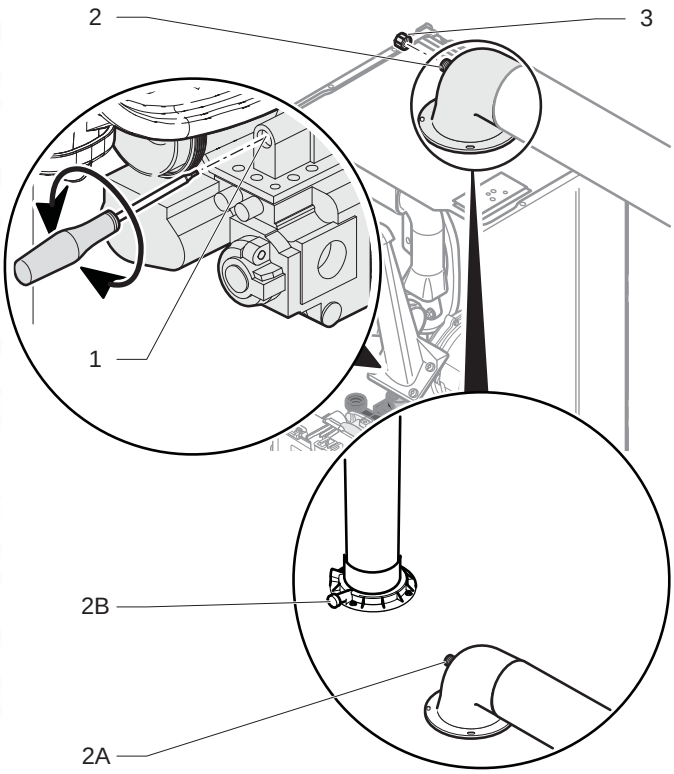

Key
1 Throttle
2 Combustion analyser sample point
2A Flue elbow
2B Vertical flue adaptor
3 Cap

- Remove the front panel first.
- Remove the cap (3) and connect a CO2 analyser to effect the measurement (2).

15.1.1 Adjusting the gas valve

- Press the on/off button to turn the appliance off.
- Turn the screw in the direction and the number of times indicated in the following table.

Gas adjustment	Model	G20 › G31	G31 › G20
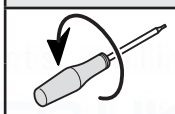	30		3 turns
	35		2.5 turns
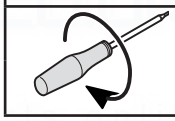	30	3 turns	
	35	2.5 turns	

15.1.2 Adjusting the maximum power setting

- Activate the test mode "P.01" and set the value to HI in order to force the burner at P. max. See chapter "Specific adjustment › Appliance technical settings and parameter list › Test modes".
- Wait approximately 5 minutes to read a stabilized CO_2 value.

- Compare the value measured with the values indicated in the table below.

Gas adjustment	G20	G31
CO_2 case ON	9 ± 0.2 %	10.1 ± 0.2 %
CO_2 case OFF	9.2 ± 0.3 %	10.3 ± 0.3 %

IMPORTANT:
Safe combustion can only be verified by measuring CO/ CO_2 ratio. This must not exceed the value shown in the table under the section "Maximum Rate and Adjustment".

15.1.3 Restarting

- Replace the cap
- Replace the appliance front panel.

Note: following the replacement of the front panel, the CO_2 value will change: you can check that the value "case on" is correct by the values in the previous table.

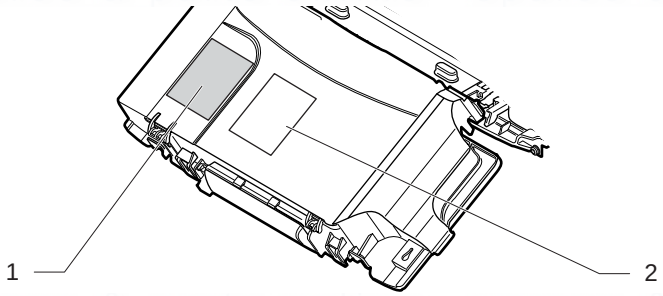

Key
1 Serial number stickers
2 Data label location

- Firmly attach the gas replacement label to the appliance in the corresponding location (1) on the electrical box.

15.2 Restart - re-check commissioning

- Before putting the appliance into operation, follow the instructions within the chapter Specific adjustment.

16 Draining

16.1 Heating circuit

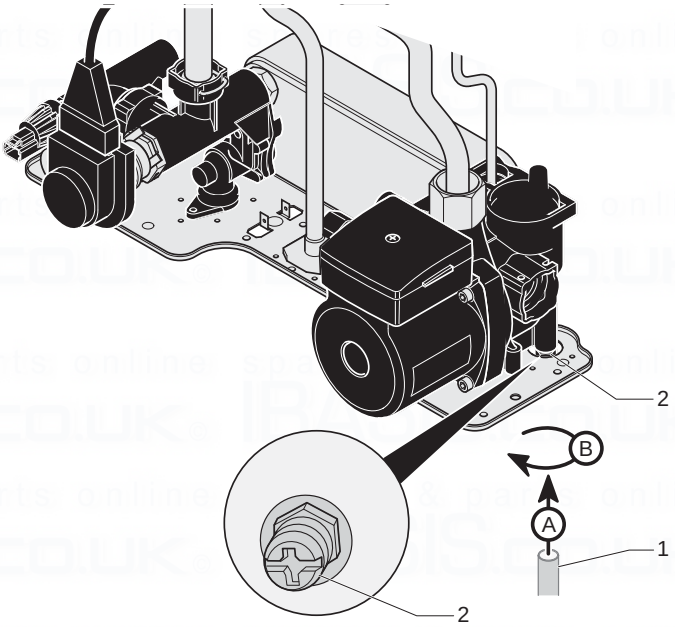

Key
1 Length of hose (not supplied)
2 Drain valve

- Drain down the heating circuit of the boiler only, by closing the heating flow and return isolating valves. See chapter "Hydraulic connection › Gas and water connections"
- Open the drain point (2). Attach a length of hose (1) if required.
- After draining, close the drain valve (2) and remove the hose.

16.2 Domestic Hot water circuit

- Drain the Domestic Hot Water circuit by closing the cold-water isolation valve.
- Open one or more hot water taps to drain the hot water circuit.

17 Servicing

- To ensure the continued efficient and safe operation of the boiler it is recommended that it is checked and serviced as necessary at regular intervals.

The frequency of servicing will depend upon the particular installation conditions and usage. However it is recommended that the boiler is inspected as part of a service at least once a year.

If this appliance is installed in a rented property there is a duty of care imposed on the owner of the property by the current issue of the Gas Safety (Installation and Use) Regulations, Section 35.

- Servicing/maintenance should be carried out by a competent person approved at the time by the Health and Safety Executive in accordance with the rules in force in the countries of destination.

- To obtain service, please call your installer or Glow-worm's own service organisation.

PLEASE NOTE: During routine servicing, and after any maintenance, we recommend that the following must be checked:

- The integrity of the flue system and the flue seals,
- The integrity of the boiler combustion circuit and the relevant seals,
- The operational (working) gas inlet pressure at maximum rate,
- The gas rate,
- The combustion performance.

- See the "Safety instructions" chapter for a list of operations to be performed prior to the maintenance of the application.
- Once the maintenance operations have been completed, consult the ¨Start Up¨ chapter to restart the appliance.

17.1 Annual Maintenance

17.1.1 Verification of components

- Check that the flow sensor is working properly.
  See chapter "Specific adjustment › Appliance technical settings and parameter list › Installation settings" and use code "d.36".
- Check that the fan is working properly.
  See chapter "Specific adjustment › Appliance technical settings and parameter list › Installation settings" and use code "d.34".
- Check that the temperature sensors are working properly.
  See chapter "Specific adjustment › Appliance technical settings and parameter list › Installation settings" and use code "d.3, d.4, d.40, d.41".
- Check the ionisation quality.
- Check that the thermal fuse protects the appliance against dry fire. Disconnect the thermal fuse and check if "F76" fault code is displayed on the screen.
- Check that the pressure sensor is working properly. The pressure must be displayed on the screen.
- Check the pressure of the expansion vessel.

17.1.2 Other checks

- Check the CO_2 rate in the fuel and compare with the values indicated in the chapter "CO_2 Measurement".
- Check that there are no leaks in the joints and the safety valves.
- Check that there are no gas leaks.
- Verify that the flue system is sound and complete.
- Check the appliance's electrical safety.

17.1.3 Cleaning of the components

- Clean the following components:
- The condensate trap
- The heat exchanger.
- The burner
- The fan

17.1.4 Corrosion and anti-sludge protection

In order to avoid corrosion, the addition of a corrosion inhibiter to the heating circuit water is recommended. The inhibiter will stop electrolytic reaction and bacterial growth between the different metals used in the installation.

It will also avoid the formation of gas which could be produced following the chemical reactions.

It is especially important to treat the water in underfloor heating systems, as low temperatures favour bacterial growth. This can lead to the formation of sludge, which in turn may block some or all of the circuits.

In order to add the correct dosage of these products, you must know the volume of water contained in the installation. It is recommended that you note down the volume for future needs.

The inhibitors must be compatible with the materials employed in the installation.

17.2 Casing removing

17.2.1 Front panel

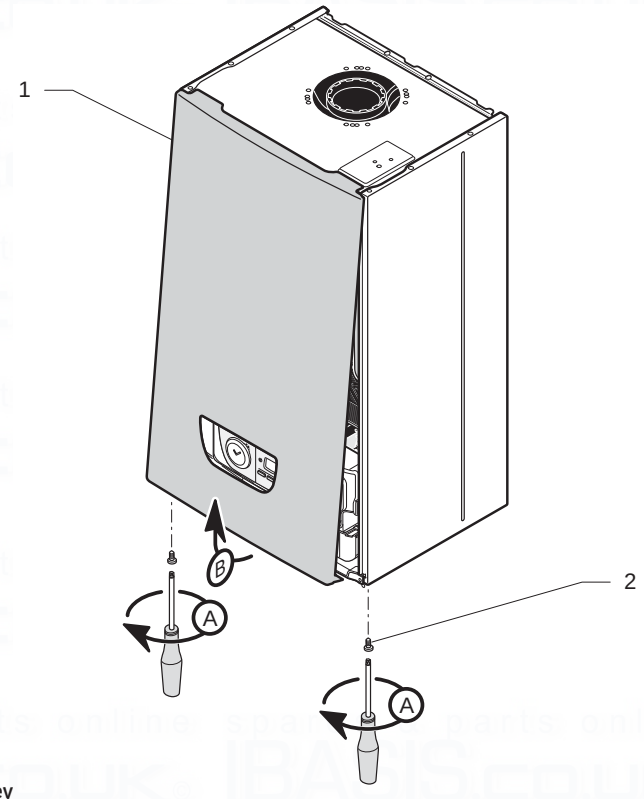

Key
1 Front panel
2 Front panel retaining screw

- Undo the two screws (2) on the underside of the front panel and remove the front panel (1).

17.2.2 Control box

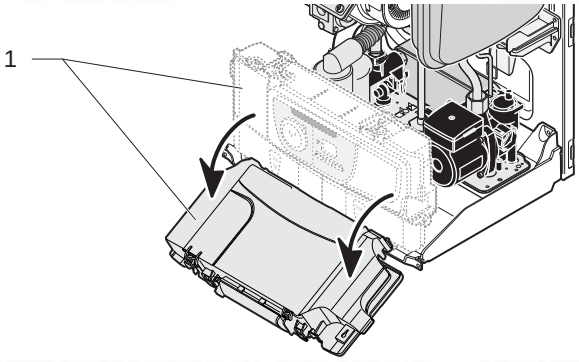

Key
1 Control box

- Position the control box (1) into the service position.

17.3 Combustion check and setting the air/gas ratio valve

17.3.1 Competency to carry out the check of combustion performance

IMPORTANT:
BS 6798: 2009 Specification for installation and maintenance of gas-fired boilers of rated input not exceeding 70kW net advises that:

- The person carrying out a combustion measurement must be assessed as competent in the use of a flue gas analyser and the interpretation of the results.
- The flue gas analyser used should be one meeting the requirements of BS7927 or BS-EN50379-3 and be calibrated in accordance with the analyser manufacturers' requirements.
- Competence can be demonstrated by satisfactory completion of the CPA1 ACS assessment, which covers the use of electronic portable combustion gas analysers in accordance with BS 7967, parts 1 to 4.

- Ensure that the gas analyser is set to the correct fuel setting.
- Select the "+ ", constant central heating with DHW function by pressing the "(mode)" button repeatedly, refer to commissioning section. The boiler should fire automatically.

IMPORTANT:
Safe combustion can only be verified by measuring CO/ CO_2 ratio. This must not exceed the value shown in the table opposite.

17.3.2 Preliminaries

Prior to, during servicing and after any maintenance or changed parts, the following inspection must be carried out.

- The integrity of the flue system and flue seals.
- The integrity of the appliance combustion circuit and relevant seals.
- A visual inspection of the flame quality.
- Electrical, gas and water connections.
- System pressure.
- The combustion performance, refer to the following procedure.
- The operational gas inlet pressure and gas rates, refer to the commissioning section paragraph 12.5. Correct any fault before continuing.

Combustion check and setting the air/gas ratio

- Remove the front casing panel and hinge down the control box. Taking care not to touch any internal components, proceed as follows:
- Connect the CO_2 combustion analyser to the relevant test point.

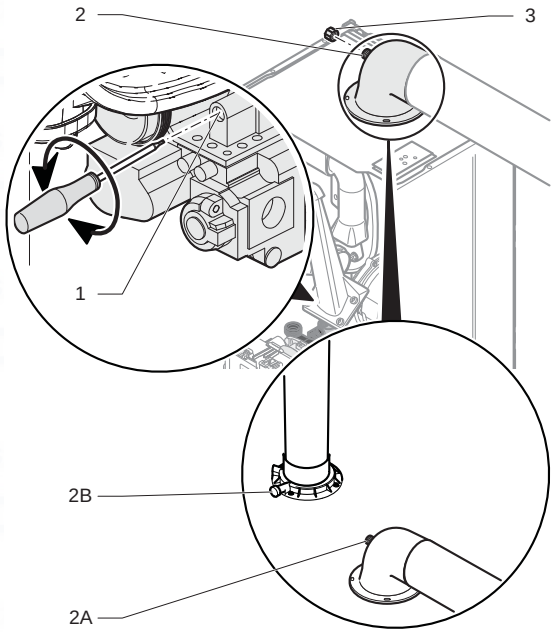

Key
1 Throttle
2 Combustion analyser sample point
2A Flue elbow
2B Vertical flue adaptor
3 Cap

17.3.3 Maximum rate check and adjustment

IMPORTANT:
To verify the maximum gas rate CO2 setting the appliance must be checked at the maximum rate.

- Activate the test mode "P.01" and set the value to HI in order to force the burner at P. max. See chapter "Specific adjustment › Appliance technical settings and parameter list › Test modes".
- Wait approximately 5 minutes to read a stabilised CO_2 value.
- Check that the value is within the range specified in table in the "check" column.

G20 Burner % CO_2			
Model	Check (case on)	Setting (case off)	CO/CO_2 ratio
30	9.2 ± 0.3%	9 ± 0.2%	0.004
35	9.2 ± 0.3%	9 ± 0.2%	0.004

G31 Burner % CO_2			
Model	Check (case on)	Setting (case off)	CO/CO_2 ratio
30	10.3 ± 0.3%	10.1 ± 0.2%	0.004
35	10.3 ± 0.3%	10.1 ± 0.2%	0.004

If the combustion reading is not within the acceptable values and the integrity of the complete flue system and combustion circuit seals have been verified and the inlet gas pressure (and gas rate) have been verified, then, it will necessary to adjust the combustion rate of the appliance.

IMPORTANT:
Adjustment is made by turning the throttle an ⅛ of a turn, waiting 1 minute to allow the appliance to stabilise before checking or making further adjustments.

- Remove the sticker covering the “throttle” adjustment screw, if fitted.
- Rotate the “throttle” (1) (anti-clockwise to increase), to the required CO_2, refer to previous diagram and the “Setting” column in the table.
- When you have finished, press the On/Off button to exit the test modes.
- Remove the analyser probe and replace the cap on the sampling point, replace the controls fascia, and the front casing panel.

IMPORTANT:
Remember to replace the sample point cap on completion of the test.

17.3.4 Gas rate check

- Check the gas rates as described in the commissioning section.

17.3.5 Completion

If it is not possible to achieve the required results for either the combustion or gas rates, it will be necessary to complete a full service of the appliance and then repeat the combustion check procedure. If after servicing and adjustment of the appliance the combustion values are still unacceptable and after further remedial work has been carried out, the appliance must be disconnected until the CO/CO_2 ratio is acceptable.

- Advice can be sought from the Glow-worm Technical Helpline.

17.4 Servicing

IMPORTANT:
If the annual check of combustion CO2, CO/CO2 ratio checks did not require adjustment and the inspections described in "Preliminaries" were satisfactory then it will not be necessary to complete a full service.

All routine servicing requirements can be achieved by the removal of the front panel.

- Position the control box into the service position.
- Before commencing with a service or replacement of parts, isolate the boiler from the electrical and gas supplies.

17.4.1 Service interval record

- Refer to benchmark Service Interval Record at the rear of this manual.

17.5 Silencer

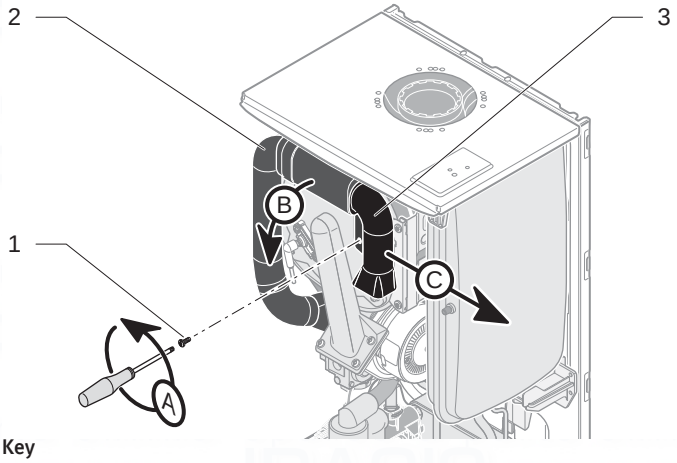

Key
1 Silencer retaining screw
2 Fixed silencer
3 Removable silencer

- Remove the silencer retaining screws (1) and remove the silencer (3).
- Clean the interior of the silencer with a dry cloth if necessary, taking care not to damage the internal foam.
- Repeat the operation in reverse order to replace the silencer.

17.6 Expansion vessel

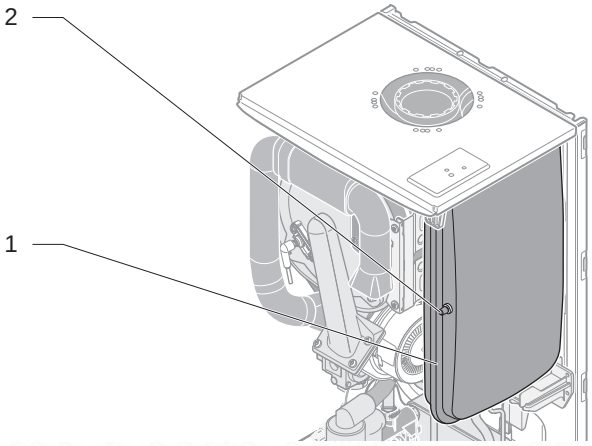

Key
1 Expansion vessel
2 Expansion vessel pressure inlet

- Check the expansion vessel's supply pressure (see « Technical Data » chapter) by means of the pressure inlet located on the expansion vessel. Adjust the pressure if necessary.
- Following the installation of a new expansion vessel, fill and purge the appliance or installation, if necessary.

17.7 Condensate trap

Warning:
condensate is mildly acidic. Use protective gloves.

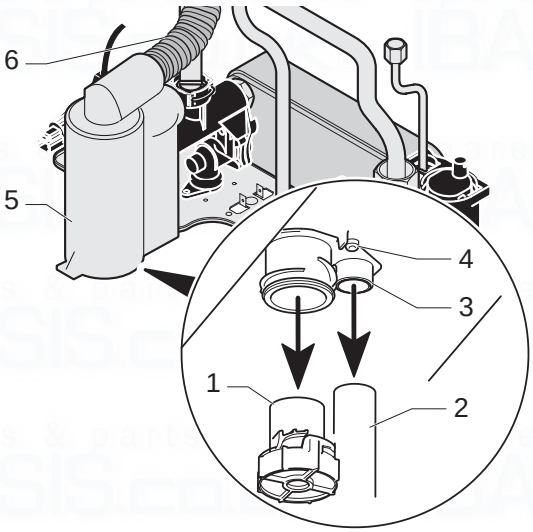

Key
1 Condensate cleaning cap
2 Condensate pipe
3 Condensate outletv
4 Condensate retaining screw
5 Condensate trap
6 Hose

- Place a container under the condensate trap (5).
- Remove the condensate from the reservoir (1).
- Disconnect the condensation discharge (2).
- Disconnect the heat exchanger hose (6).

The condense trap will contain water, lift taking care not to spill the water.

- Remove the condensate trap (5) using the retaining screw (4).
- Clean the hose, the trap and the siphon, remove any accumulated dirt.
- Reassemble the components, taking care to position the gaskets correctly.
- Start the siphon (3) and fill with water.

17.8 Combustion block

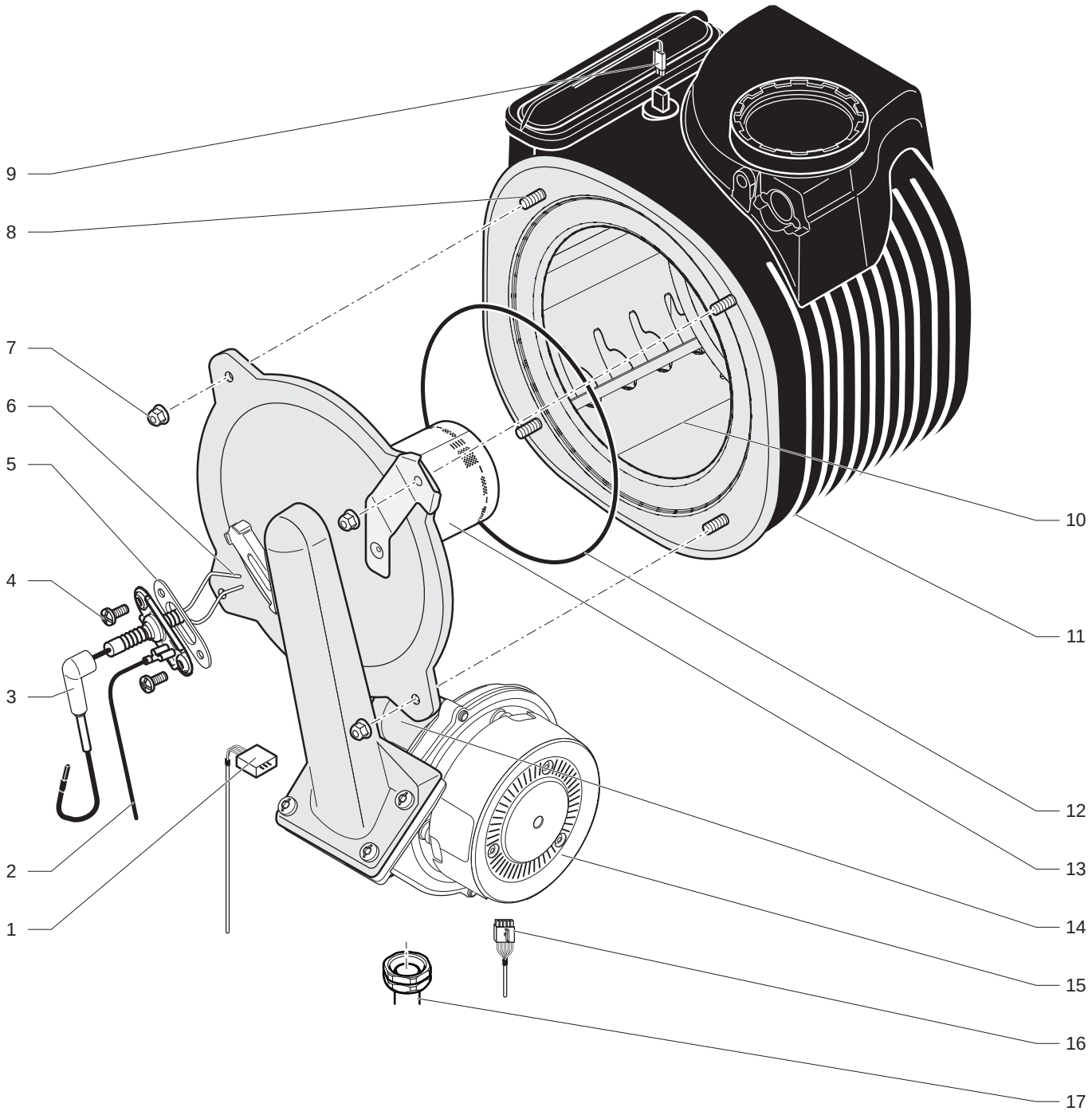

Legend
1 Gas valve connection
2 Grounding cable
3 Spark electrode inlet
4 Spark electrode retaining screw.
5 Spark electrode gasket
6 Spark electrode
7 Burner retaining nut
8 Burner retaining screw
9 Thermal fuse connection
10 Coil
11 Heat exchanger
12 Burner door seal
13 Burner
14 Gas valve
15 Fan
16 Fan connection
17 Gas pipe

17.8.1 Spark electrode

- Disconnect the electrode inlet (3) and the grounding cable (2).
- Remove the 2 spark electrode retaining screws (4).
- Carefully remove the electrode from the combustion chamber.
- Check that the extremes of the electrode (6) are not damaged.
- Clean away any accumulation of dirt and check that the distance between the two electrodes is between 3.5 and 4.5 mm.
- Check that the gasket (5) is not damaged. Replace if necessary.

17.8.2 Dismantling the burner

Warning:
The burner door seal (12) must be replaced each time the burner is dismantled.

- Disconnect the spark electrode connector (6) from the igniter unit.
- Remove the gas pipe (17).
- Remove the connectors from the gas valve (1) and the fan (15).
- Remove the retaining screw of the silencer.
- Loosen the 4 nuts (7).
- Remove the burner group from the heat exchanger (11).
- The studs (8) fixed to the heat exchanger must not be damaged. Should it be damaged, replace the heat exchanger.
- The burner gate insulation should not be damaged. Replace if damaged.

17.8.3 Cleaning the heat exchanger

- Clean the coil (19) in the heat exchanger (11) with water.

17.8.4 Burner control

- The burner (13) does not require maintenance and should not be cleaned.
- Check that its surface is not damage. Replace the burner if necessary.
- Following the verification or replacement of the burner, assemble the burner group as described in the following chapter.

17.8.5 Re-assembling the burner group

- Place the burner group on the heat exchanger (11).
- Progressively tighten the 4 nuts (7) in an alternate order.
- Reassemble the silencer.
- Connect the gas tube (17) with a new gasket to the burner group.
- Connect the spark electrode connector (6) to the igniter unit.
- Connect the connector to the gas valve (1) and the fan (15).
- Open the appliance gas input.
- Check the watertightness of the gas connection.

17.9 Service completion

- Re-check the combustion, see chapter "Combustion check".

On completion of the service, the "Benchmark" Service Record sould be completed.

18 Replacement of Parts

- Do not use reconditioned or copy parts, only use original parts supplied by Glow-worm.
- If a part is required, contact the Glow-worm service organisation.
- Please quote the name of the appliance, this information will be on the name badge on the front of the appliance.
- If in doubt seek advice from the local gas company or Glow-worm's own service organisation.

DANGER:
Replacement of parts must be carried out by a competent person approved at the time by the Health and Safety Executive.

PLEASE NOTE: During change of part of the combustion circuit, we recommend that the following is the following must be checked:
- The integrity of the flue system and the flue seals,
- The integrity of the boiler combustion circuit and the relevant seals,
- The operational (working) gas inlet pressure at maximum rate,
- The gas rate,
- The combustion performance.

18.1 General

ATTENTION:
The replacement of parts described in sections "Combustion block" will require the removal of the burner module assembly and the replacement of seal and self locking nuts.

Replacement parts that have associated components that need to be replacing on removal, i.e. 'O' ring, seals, gasket, etc., will be supplied and should be fitted.

- Before replacing any parts of the boiler, isolate from the mains electric supply and turn off the gas at the gas service isolation valve on the boiler.

Unless stated otherwise parts are replaced in the reverse order to removal.

- After replacing any parts, always test for gas tightness and if necessary carry out functional test of the controls.

18.2 Boiler Access

For replacement of parts, the front casing panel of the boiler will need to be removed.

- To remove undo the two screws on the underside of the front casing and lift off.

18.3 Viewing window

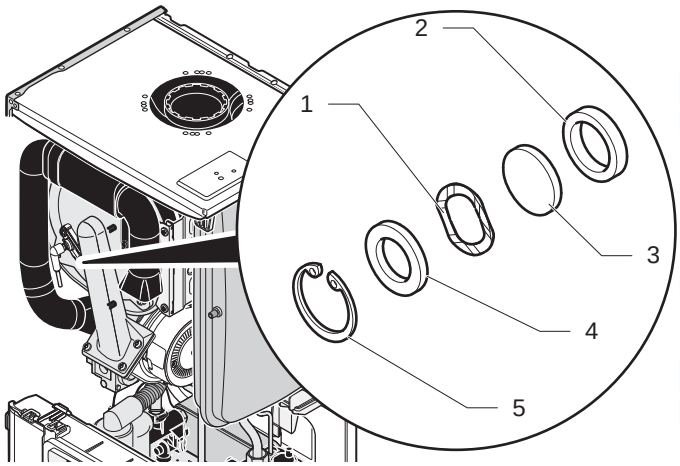

Key
1 Fibre washer
2 Steel washer
3 Glass
4 Steel washer
5 Circlip

- Remove the circlip (5).
- Remove the steel washer (4).
- Remove fibre washer (1).
- Remove the glass (3).

18.3.1 Expansion vessel

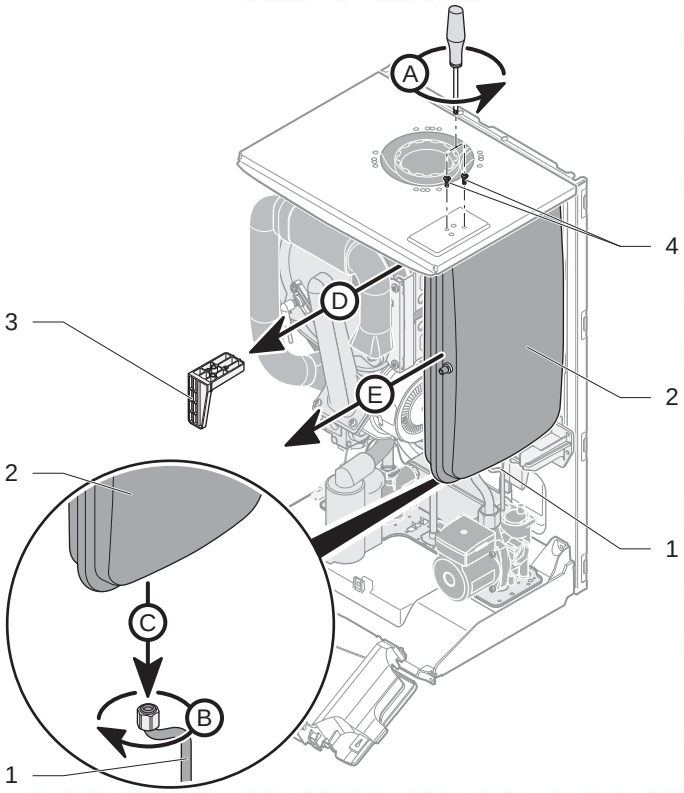

Key
1 Connector
2 Expansion vessel
3 Upper support bracket
4 Retaining screw
5 Gasket

Drain the boiler heating circuit as described in the appropriate chapter "Draining".

- Remove the two screws (4).
- Undo the connector (1) at the base of the vessel.
- Remove upper support bracket (3).
- Remove the expansion vessel (2).
- Fit a new gasket between the expansion vessel and connector.
- Refill, vent and pressurise the boiler.

18.4 Hydraulic block

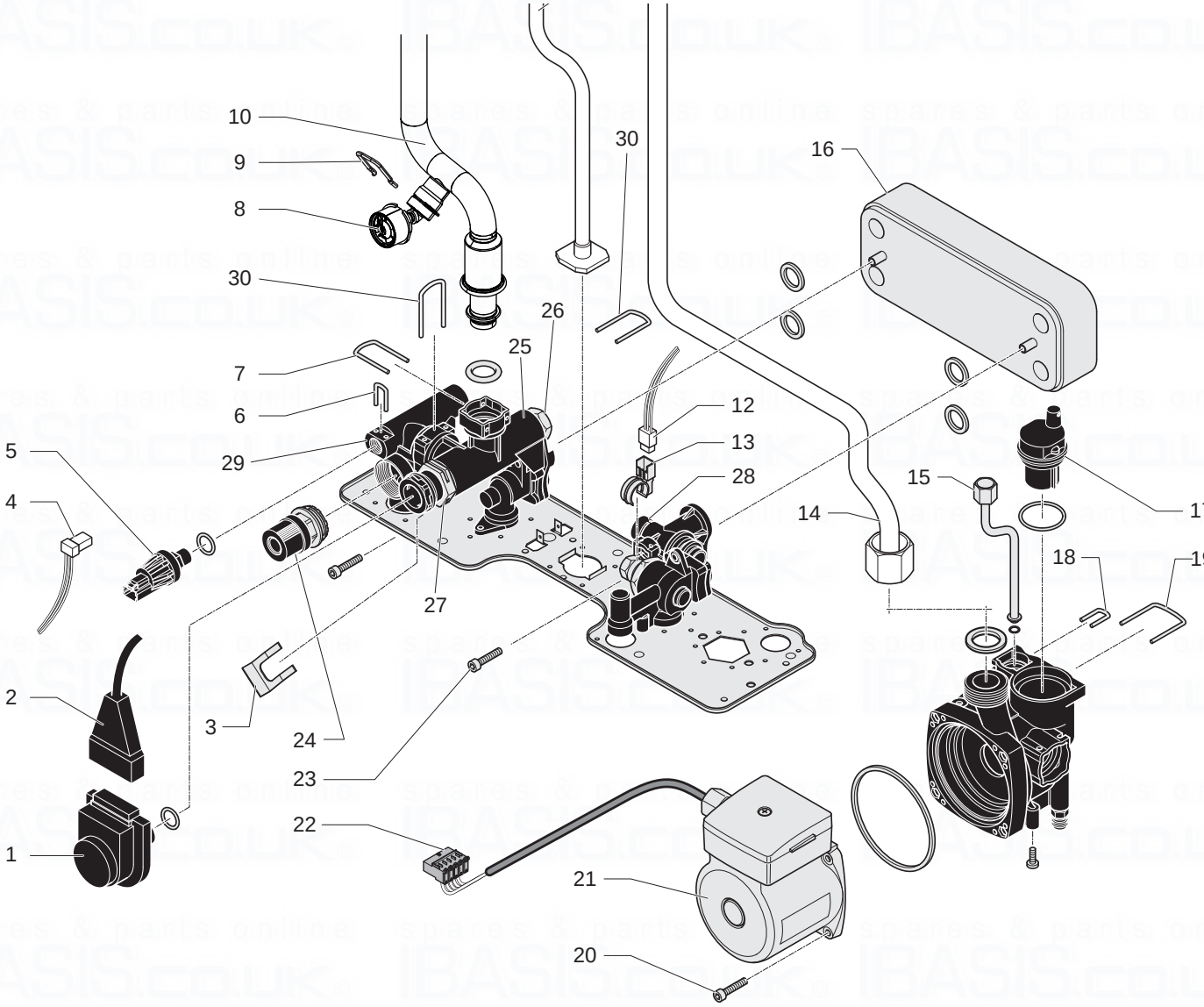

Key
1 Three-way valve
2 Three-way valve electrical plug
3 Three-way valve electrical plug retaining clip
4 Low water pressure sensor connector
5 Low water pressure sensor
6 Low water pressure sensor retaining clip
7 Heating flow pipe retaining clip
8 Manometer
9 Manometer retaining clip
10 Heating flow pipe
11 Gas pipe
12 Flow sensor electrical plug
13 Flow sensor
14 Heating return pipe
15 Expansion vessel pipe
16 Plate-to-plate heat exchanger
17 Automatic air vent
18 Expansion vessel pipe clip
19 Automatic air vent retaining clip
20 Pump head retaining screws
21 Pump housing
22 Pump head connector
23 Plate-to-plate heat exchanger retaining screws
24 Safety Discharge Valve
25 Bypass Valve
26 Bypass Valve retaining nut
27 Bypass Valve retaining nut
28 Impeller housing
29 Safety discharge valve plastic housing
30 Retaining clip

18.4.1 Pump (head only)

- Drain the boiler heating circuit as described in the appropriate chapter "Draining".
- Disconnect the electrical plug (22) from the main board.
- Remove the four cap head screws (20).
- Carefully remove the pump head (21) together with cable. Do not strain cable.
- Reconnect wiring to new pump head and fit cover.
- Fit the new pump head by repeating the operations in reverse.

18.4.2 Automatic air vent

- Drain the boiler heating circuit as described in the appropriate chapter "Draining".
- Remove the retaining clip (19). Remove the automatic air vent (18).
- Fit the new automatic air vent and 'O' ring ensuring the vent cap is left loose.
- Refill, vent and pressurise the boiler.

18.4.3 Low water pressure sensor

- Drain the boiler heating circuit as described in the appropriate chapter "Draining".
- Disconnect the electrical lead (4).
- Remove the retaining clip (6), remove the low water pressure sensor (5).
- Fit the new low water pressure sensor.
- Refill vent and pressurise the boiler.

18.4.4 Safety discharge valve

- Drain the boiler heating circuit as described in the appropriate chapter "Draining".
- Remove the low water pressure sensor as described in the previous section.
- Undo the safety discharge valve union and remove the pipe.
- Disconnect the Central Heating isolation valve.
- Remove the securing clips and withdraw the safety discharge valve plastic housing (29).
- Remove the safety discharge valve.
- Fit new 'O' ring. Refill, vent and pressurise the boiler.

18.4.5 Flow sensor and impeller

- Remove the the electrical connection (12).
- Unclip the flow sensor (13).
- Unscrew the impeller housing (28) and remove the impeller.

18.4.6 Bypass

- Drain the boiler heating circuit as described in the appropriate chapter "Draining".
- Remove the bypass valve retaining nut (26) to remove the bypass from its housing (25).
- After replacing the bypass, refill, vent and pressurise the boiler.

18.4.7 3 way valve motor and diverter valve

- Drain the boiler heating circuit as described in the appropriate chapter "Draining".
- Disconnect the electrical plug (2).
- Remove the retaining clip (3).
- Remove the three way valve motor (1).
- Remove the diverter valve retaining nut.
- Remove the diverter valve.
- Fit new three way valve motor and diverter valve assembly.
- Refill, vent and pressurise the boiler.

18.4.8 Plate-to-plate heat exchanger

- Drain the boiler heating and domestic hot water circuits as described in the appropriate chapter "Draining".
- Remove the two securing screws (23).
- Remove the plate-to-plate heat exchanger (17).
- When replacing the plate-to-plate heat exchanger, ensure that the four rubber sealing washers are fitted into the hydroblock.

NOTE: The plate-to-plate heat exchanger only fits one way.

- Refill, vent and pressurise the boiler.

18.5 Combustion block

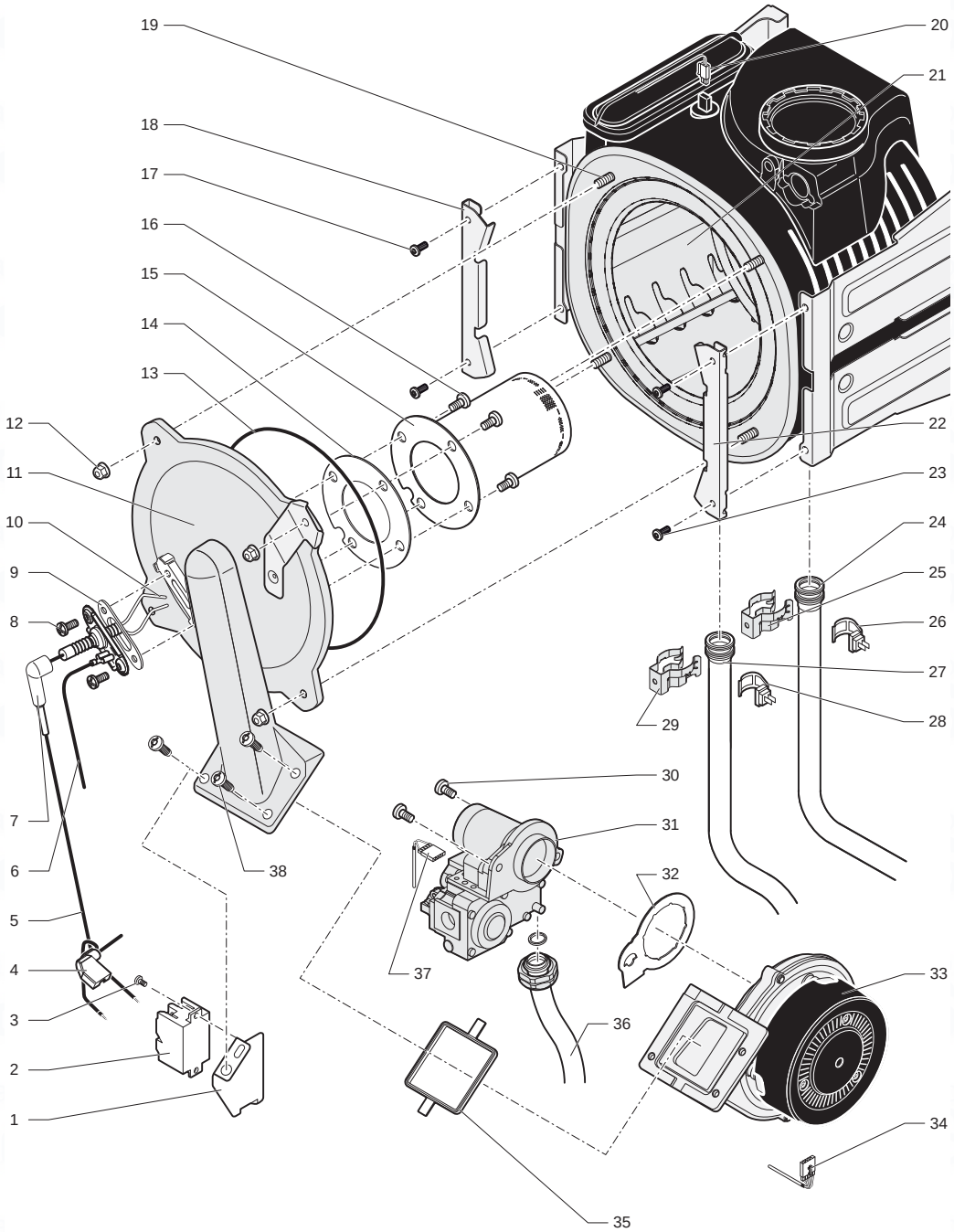

Legend

1 Igniter unit retaining bracket
2 Igniter unit
3 Igniter unit retaining screw
4 Igniter unit electrical connector
5 Electrode / igniter unit connection cable
6 Earth cable
7 Spark electrode cap
8 Spark electrode retaining screw
9 Spark electrode gasket
10 Spark electrode
11 Combustion burner door assembly
12 Combustion burner door assembly - nut
13 Combustion burner door assembly - seal
14 Burner gasket
15 Burner
16 Burner retaining screw
17 Heat exchanger retaining screw
18 Heat exchanger retaining bracket
19 Burner gate retaining screw
20 Thermal fuse connection
21 Heat exchanger
22 Heat exchanger retaining bracket
23 Heat exchanger retaining screw
24 Heating return pipe
25 Heating return pipe retaining clip
26 Return heating temperature sensor
27 Heating flow pipe
28 Flow heating temperature sensor
29 Heating flow pipe retaining clip
30 Gas valve retaining screw
31 Gas valve
32 Gas valve gasket
33 Fan
34 Fan electrical connection
35 Fan/burner gasket
36 Gas pipe
37 Gas valve electrical connection
38 Fan retaining screw

18.5.1 Spark electrode

- Disconnect the electrode cap (7) and the earthing cable (6).
- Remove the 2 spark electrode retaining screws (8).
- Carefully remove the electrode (10) from the combustion chamber.
- Remove the gasket (9).
- Check that the distance between the 2 electrodes is between 3.5 and 4.5 mm.
- Install the electrode and a new gasket.

18.5.2 Igniter unit

- Remove the ignition lead (2).
- Remove electrical connections (4).
- Loosen the screws (3) located on the igniter unit (2).
- Remove the igniter unit (2).

18.5.3 Removing the combustion/burner door assembly

ATTENTION:
The burner door seal (13) must be replaced each time the combustion/burner door assembly is removed.

- Disconnect the spark electrode cap (7) from the igniter unit.
- Disconnect the gas supply pipe (36) at the gas valve.
- Remove the electrical connectors from the gas valve (37) and the fan (34).
- Remove the retaining screw of the silencer.
- Loosen the 4 nuts (12).
- Remove the combustion/burner door assembly from the heat exchanger (11).
- The studs (19) must not be damaged. If damaged you will need to replace the heat exchanger.
- The combustion/burner door assembly insulation should be inspected and replaced if damaged.

18.5.4 Burner

- Remove the 3 burner retaining screws (16).
- Remove the burner (15) and the gasket (14).
- Fit the new burner and the new gasket.

18.5.5 Heat exchanger

ATTENTION:
There will be water in the heat exchanger.Carefully ease heat exchanger out.

- Drain the boiler heating and hot water circuits as described in the appropriate chapter "Draining".
- Remove the flue connection.
- Undo the two screws located on the top of each side panel.
- Remove the thermal fuse connector (20).
- Remove the 2 heating pipe retaining clips (25) and (29).
- Release the heating pipes (24) and (27) from the heat exchanger.
- Release the condensate trap pipe from the heat exchanger.
- Remove the combustion/burner door assembly (11) refering to chapter "Removing the combustion/burner door assembly".
- Unscrew the 4 retaining screws (17) and (23) and remove the 2 retaining plates (18) and (22) from the heat exchanger.
- Pull the heat exchanger towards you to extract it from its 2 side rails.

18.5.6 Re-assembling the burner group

- Place the burner assembly on the heat exchanger (21).
- Progressively tighten the 4 nuts (12) in an alternate order.
- Reassemble the silencer.
- Connect the gas pipe (36) with a new gasket to the burner group.
- Connect the spark electrode connector (5) to the igniter unit.
- Connect the connector to the gas valve (37) and the fan (34).
- Open the appliance's gas input.
- Check the tightness of the gas connection.

18.5.7 Heating Flow Thermistor

- Remove the electrical connections from the thermistor (28).
- Remove the retaining clip from the flow pipe (27).

IMPORTANT:
When reconnecting, the polarity of the wiring to thermistors is not important.

18.5.8 Heating Return Thermistor

- Remove the electrical connections from the thermistor (26).
- Remove the retaining clip from the return pipe (24).

IMPORTANT:
When reconnecting, the polarity of the wiring to thermistors is not important.

18.5.9 Gas valve

- Remove the burner door (11) refering to chapter "Dismantling the burner door".
- Remove the two gas valve retaining screws (30).
- Remove the gas valve (31) and the gasket (32).
- Fit the new gas valve and the new gasket by repeating the operations in reverse.
- After assembly test for gas tightness and purge in accordance with the current issue of BS6891or in IE, the current edition of I.S.813 “Domestic Gas Installations”.
- Check the combustion CO_2.

18.5.10 Fan

- Remove the burner door (11) refering to chapter "Dismantling the burner door".
- Remove the gas valve (31) (see previous paragraph).
- Loosen the 3 screws (38) located on the burner door (11).
- Remove the fan (33) and the gasket (35).
- Fit the new gasket (35).
- Screw the new fan to the burner door (11).
- After assembly test for gas tightness and purge in accordance with the current issue of BS6891or in IE, the current edition of I.S.813 “Domestic Gas Installations”.

18.6 Condensate trap

ATTENTION:
Condensate is mildly acidic. Wear protective gloves.

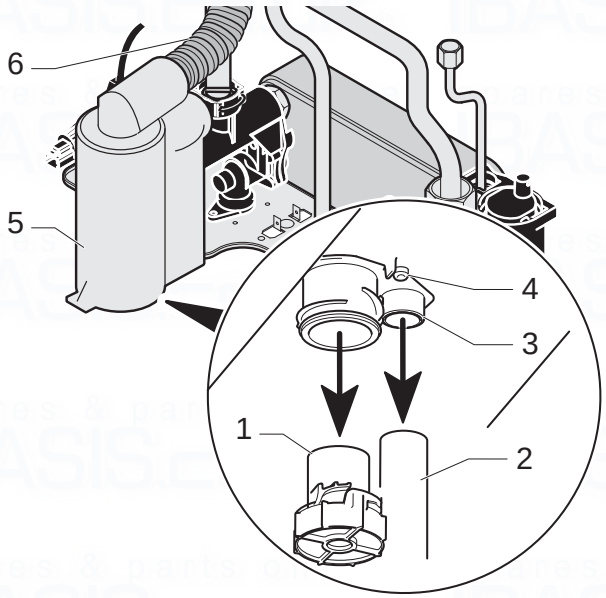

Key
1 Condensate reservoir
2 Condensate discharge
3 Condensate outlet
4 Condensate retaining screw
5 Condensate trap
6 Hose

- Place a container under the condensate trap (5).
- Remove the condensate from the reservoir (1).
- Disconnect the condensation discharge (2).
- Disconnect the heat exchanger hose (6).

The condense trap will contain water, lift taking care not to spill the water.

- Remove the condensate trap (5) using the retaining screw (4).
- IMPORTANT: Partially fill the condensate trap with water before replacing. Start the siphon (3) and fill with water.

18.7 PCB

IMPORTANT:
When replacing the board refer to instructions supplied with the spare part.

18.7.1 Main PCB

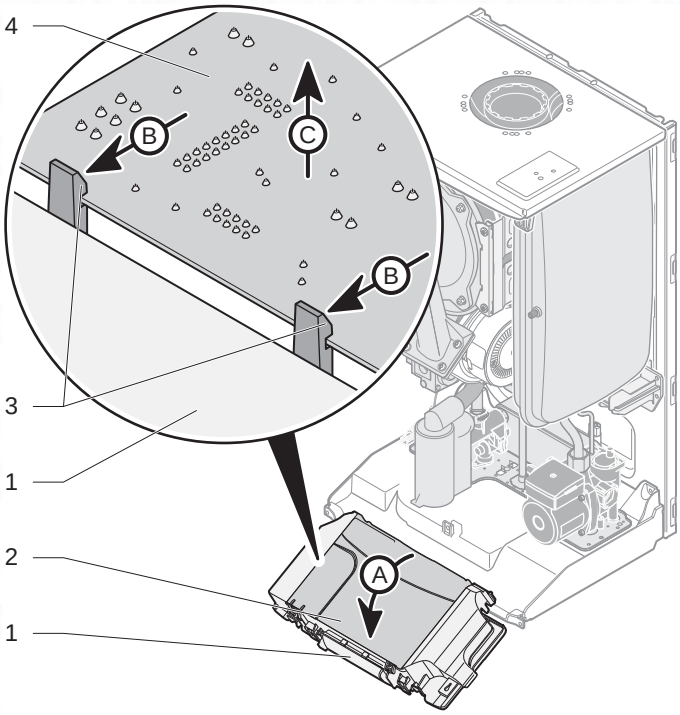

Key
1 Control panel
2 Rear panel
3 Retainings clips
4 Main PCB

- Remove the 24V and 230V connections.
- Remove the rear panel (2).
- Ease back the two PCB retaining clips (3) and withdraw the PCB from the retaining lugs.
- Remove the electrical connections to the PCB (appliance interface cable).
- When refitting the rear panel, ensure the leads are not trapped.

18.7.2 2A Fuse Rating

- For access, refer to chapter "Main PCB".
- The fuse is located at top right hand side of the PCB, see chapter "Electrical connection ›Wiring diagram".

18.7.3 User interface PCB

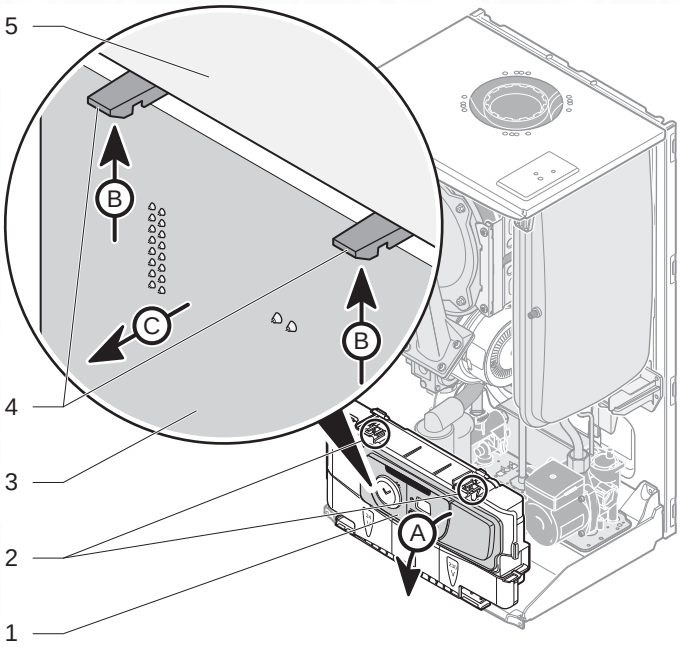

Key
1 User interface
2 Retaining slots
3 User interface PCB
4 Retainings clips
5 Control Panel

- Remove the user interface (1) easing back the two retaining slots (2).
- Ease back the two PCB retaining clips (4) and withdraw the PCB from the retaining lugs.
- Remove the electrical connections to the PCB.
- When refitting the user interface, ensure the leads are not trapped.

18.7.4 Mains supply cable

DANGER:
The main supply cable must be replaced by a qualified and competent electrician.

- If the main supply cable is damaged, replace it refering to the chapter "Electrical connection".

19 Spare parts

In order to guarantee the safe and prolonged life of the product, manufacturers genuine spare parts must be used.

IMPORTANT:
This appliance displays a CE Mark of conformity. Only use the manufacturer's genuine, new spare parts.

- Ensure that spare parts are correctly mounted in the right position and direction. After fitting any spare part or servicing, the appliance must be tested for its safe operation.

Short List of Parts

- When ordering spare parts, contact Glow-worm's own service organisation.
- Please quote the name of the appliance and serial number, to be found on the data label. If ordering from British Gas also quote the G.C. number of the part.

Key No.	Part No.	Description	GC Part No.
1	0020097277	Fan	
2	A000035144	Spark igniter	
3	2000801935	Thermistor (flow and return)	
4	0020097279	Gas valve	
5	0020038441	Electrode assembly	
6	0020118159	User interface PCB	

Key No.	Part No.	Description	GC Part No.
7	0020136541	Plate to plate heat exchanger 30c	
	0020173017	Plate to plate heat exchanger 35c	
8	2000801912	3 way valve motor	
9	0020118139	Pump 30c	
	0020173018	Pump 35c	
10	0020118178	Water flow sensor	
11	0020061608	Water flow sensor	
12	0020118138	Main PCB	
13	0020079644	Low water pressure sensor	
14	801635	Burner Door Seal Kit	
16	002011896	Diverter valve	

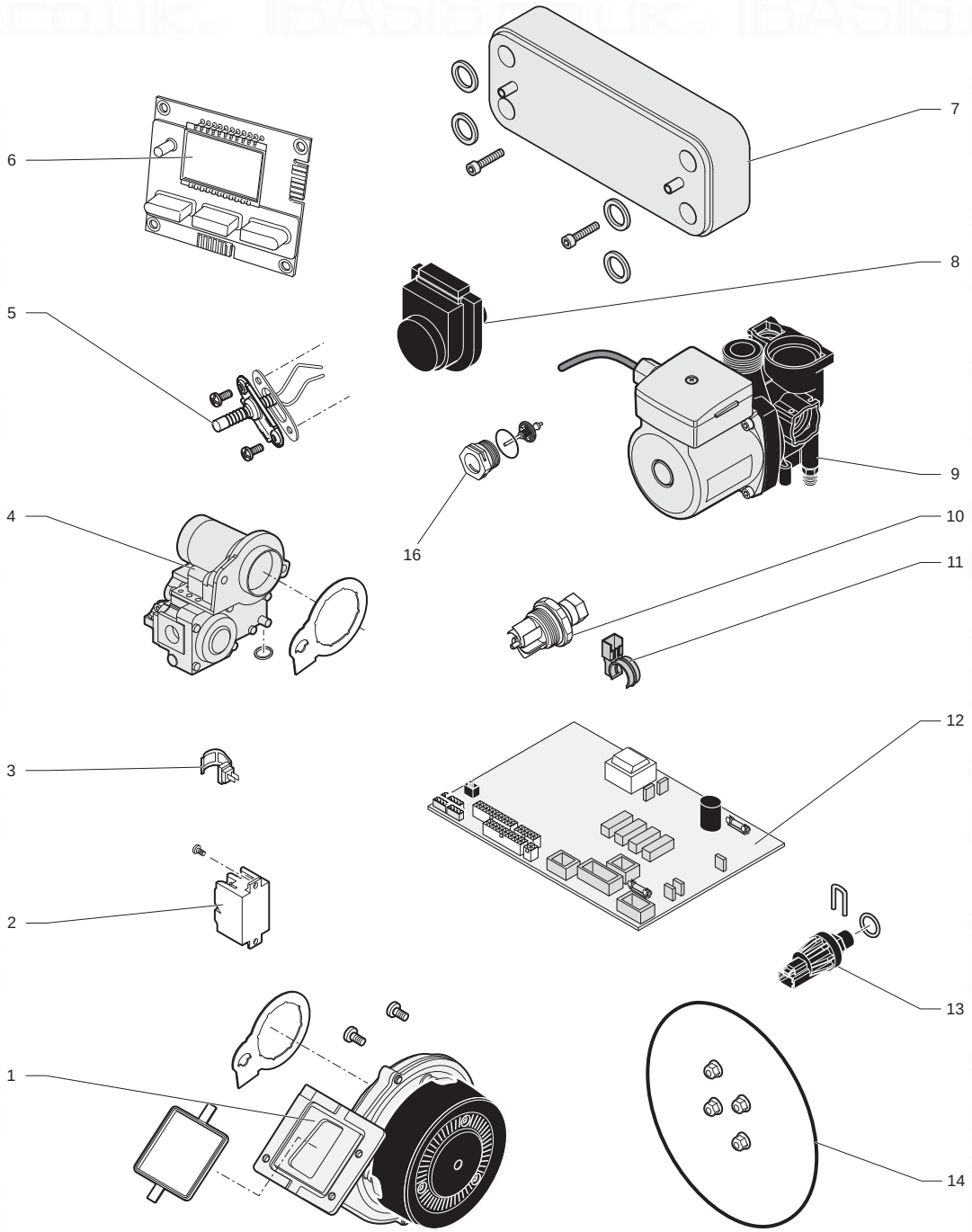

Manual Handling

IMPORTANT. With regards to the Manual Handling Operations, 1992 Regulations, the following lift operation exceeds the recommended weight for a one man lift.

General recommendations when handling
Clear the route before attempting the lift.
Ensure safe lifting techniques are used – keep back straight – bend using legs. Keep load as close to body as possible. Do not twist – reposition feet instead. If 2 persons performing lift, ensure co-ordinated movements during lift. Avoid upper body/top heavy bending - do not lean forward/sideways. Recommend wear suitable cut resistant gloves with good grip to protect against sharp edges and ensure good grip.
Always use assistance if required.

Removal of carton from delivery van
Recommend 2 person lift or 1 person with use of sack truck. If 1 person is performing lift, straddle the load, tilt and place carton into position on truck. Recommend secure appliance onto truck with suitable straps. Ensure safe lifting techniques are used – keep back straight – bend using legs. Keep load as close to body as possible. If 2 persons performing lift, ensure co-ordinated movements during lift. Always use assistance if required.

Carriage of carton from point of delivery to point of installation – ground floor.
Recommend 2 person lift or 1 person with use of sack truck. If 1 person is performing lift, straddle the load, tilt and place carton into position on truck. Recommend secure appliance onto truck with suitable straps. Ensure safe lifting techniques are used – keep back straight – bend using legs. Keep load as close to body as possible. If 2 persons performing lift, ensure co-ordinated movements during lift. Clear the route before attempting the lift. If removing boiler from truck straddle the load and tilt forwards to facilitate secure grip. Ensure safe lifting techniques are used – keep back straight – bend using legs. Do not twist – reposition feet instead. Take care to avoid trip hazards, slippery or wet surfaces and when climbing steps and stairs. Always use assistance if required.

Carriage of carton from point of delivery to point of installation – first or higher floor, cellar.
Recommend 2-person lift or 1 person with use of sack truck. If 1 person is performing lift, straddle the load, tilt and place carton into position on truck. Recommend secure appliance onto truck with suitable straps. Ensure safe lifting techniques are used – keep back straight – bend using legs. Keep load as close to body as possible. If 2 persons performing lift, ensure co-ordinated movements during lift. Avoid upper body/top heavy bending - do not lean forward/sideways. Clear the route before attempting the lift. If removing boiler from truck straddle the load and tilt forwards to facilitate secure grip. Ensure safe lifting techniques are used – keep back straight – bend using legs. Do not twist – reposition feet instead. Take care to avoid trip hazards, slippery or wet surfaces and when climbing steps and stairs. Always use assistance if required.

Carriage of carton from point of delivery to point of installation – roofspace.
Recommend 2-person lift. Ensure co-ordinated movements during lift. Avoid upper body/top heavy bending - do not lean forward/sideways. Clear the route before attempting the lift. Take care to avoid trip hazards, slippery or wet surfaces and when climbing steps and stairs. When transferring appliance into roofspace, recommend 1 person to be in roofspace to receive the appliance and other person to be below to pass up and support appliance. Ensure safe lifting techniques are used – keep back straight – bend using legs. Keep load as close to body as possible. Always use assistance if required. It is assumed safe access, flooring and adequate lighting are provided in the roof space. It is recommended a risk assessment of the roof space area be carried out before moving the appliance into the area to take into account access, stability of flooring, lighting and other factors, and appropriate measures taken.

Unpacking of appliance from carton.
Recommend 2 persons unpack appliance from carton. Always keep working area clear. Cut the carton straps, lift carton up and slide over polystyrene end packs. Remove top polystyrene pack with fittings.

Positioning of Appliance for Final Installation – no obstructions.
Recommend 2 persons lift appliance to position into place. Fit bracket securely onto wall before lifting appliance into position. Obtain firm grip on front and sides of appliance, lift upwards, ensure stable balance achieved and lift upwards to position in place on bracket. Ensure safe lifting techniques are used – keep back straight – bend using legs - when lifting load from floor level. Do not twist – reposition feet instead. Keep boiler as close as possible to body throughout lift to minimise strain on back. Ensure co-ordinated movements to ensure equal spread of weight of load. Always use assistance if required. Recommend wear suitable cut resistant gloves with good grip to protect against sharp edges and ensure good grip when handling appliance.

Positioning of Appliance for Final Installation – above worktop, foreseeable obstructions etc.
Recommend 2 persons lift appliance to position into place. Fit bracket securely onto wall before lifting appliance into position. Obtain firm grip on front and sides of appliance, lift upwards, onto worktop if practicable. Ensure stable balance achieved and lift upwards to position in place on bracket. If 2 persons positioning onto bracket obtain firm grip at front and sides/base of boiler. Ensure co-ordinated movements during 2 person lifts to ensure equal spread of weight of load. Ensure safe lifting techniques are used – keep back straight – bend using legs - when lifting load from floor level. Do not twist – reposition feet instead. Keep boiler as close as possible to body throughout lift to minimise strain on back. Avoid upper body/top heavy bending - do not lean forward/sideways. Always use assistance if required. Recommend wear suitable cut resistant gloves with good grip to protect against sharp edges and ensure good grip when handling appliance.

Positioning of Appliance for Final Installation – within compartment etc. restricting installation.
Recommend 2 persons lift appliance to position into place, space permitting. Fit bracket securely onto wall before lifting appliance into position. Obtain firm grip on front and sides of appliance, lift upwards, onto worktop if practicable. Ensure stable balance achieved and lift upwards to drop into place onto bracket. If 2 persons positioning onto bracket obtain firm grip at front and sides/base of boiler. Ensure co-ordinated movements during 2 person lifts to ensure equal spread of weight of load. If 1 person positioning onto bracket recommend obtain firm grip supporting base of boiler. Ensure safe lifting techniques are used – keep back straight – bend using legs - when lifting load from floor level. Do not twist – reposition feet instead. Keep boiler as close as possible to body throughout lift to minimise strain on back. Always use assistance if required. Recommend wear suitable cut resistant gloves with good grip to protect against sharp edges and ensure good grip when handling appliance.

Positioning of Appliance for Final Installation – in roof space restricting installation.
Recommend 2 persons lift appliance to position into place, space permitting. Fit bracket securely onto wall before lifting appliance into position. Obtain firm grip on front and sides of appliance, lift upwards, ensure stable balance achieved and lift upwards to drop into place onto bracket. If 2 persons positioning onto bracket obtain firm grip at front and sides/base of boiler. Ensure co-ordinated movements during 2 person lifts to ensure equal spread of weight of load. If 1 person positioning onto bracket recommend obtain firm grip supporting base of boiler. Ensure safe lifting techniques are used - keep back straight – bend using legs - when lifting load from floor level. Do not twist – reposition feet instead. Keep boiler as close as possible to body throughout lift to minimise strain on back. Always use assistance if required. Recommend wear suitable cut resistant gloves with good grip to protect against sharp edges and ensure good grip when handling appliance. It is recommended a risk assessment of the roof space area be carried out before moving the appliance into the area to take into account access, stability of flooring, lighting and other factors, and appropriate measures taken.

Declaration of Conformity

Installation, Commissioning and Service Record

benchmark
COLLECTIVE MARK
THE MARK OF QUALITY FOR THE INSTALLATION, COMMISSIONING AND SERVICING OF DOMESTIC HEATING AND HOT WATER SYSTEMS

spares & parts online IBASIS.CO.UK

Please affix the label positioned on the top panel of your boiler over this area.

PEEL OFF

COMMISSIONING CHECKLIST
GAS BOILER SYSTEM

This Commissioning Checklist is to be completed in full by the competent person who commissioned the boiler as a means of demonstrating compliance with the appropriate Building Regulations and then handed to the customer to keep for future reference.

Failure to install and commission this equipment to the manufacturer's instructions will invalidate the warranty but does not affect statutory rights.

Customer Name _____ Telephone Number _____

Address _____

Commissioned by *(print name)* _____ Engineer ID Number _____

Company Name _____ Telephone Number _____

Company Address _____

_____ Commissioning Date _____

To be completed by the customer on receipt of a Building Regulations Compliance Certificate *:

Building Regulations Notification Number *(if applicable)* _____

CONTROLS Tick the appropriate boxes

Time and Temperature Control to Heating	Room Thermostat and Programmer/Timer ☐	Programmable Room Thermostat ☐	Load/Weather Compensation ☐	Optimum Start Control ☐
Time and Temperature Control to Hot Water			Cylinder Thermostat and Programmer/Timer ☐	Combination Boiler ☐
Heating Zone Valves			Fitted ☐	Not Required ☐
Hot Water Zone Valves			Fitted ☐	Not Required ☐
Thermostatic Radiator Valves			Fitted ☐	Not Required ☐
Automatic Bypass to System			Fitted ☐	Not Required ☐
Boiler Interlock				Provided ☐

ALL SYSTEMS

The system has been flushed and cleaned in accordance with BS7593 and boiler manufacturer's instructions Yes ☐

What system cleaner was used? _____

What inhibitor was used? Quantity _____ *litres*

CENTRAL HEATING MODE Measure and Record:

Gas Rate _____ m^3/hr OR _____ ft^3/hr

Burner Operating Pressure (if applicable) _____ mbar OR Gas Inlet Pressure _____ mbar

Central Heating Flow Temperature _____ °C

Central Heating Return Temperature _____ °C

COMBINATION BOILERS ONLY

Is the installation in a hard water area (above 200ppm)? Yes ☐ No ☐

If yes, has a water scale reducer been fitted? Yes ☐ No ☐

What type of scale reducer has been fitted? _____

DOMESTIC HOT WATER MODE Measure and Record:

Gas Rate _____ m^3/hr OR _____ ft^3/hr

Burner Operating Pressure (at maximum rate) _____ mbar OR Gas Inlet Pressure (at maximum rate) _____ mbar

Cold Water Inlet Temperature _____ °C

Hot water has been checked at all outlets Yes ☐ Temperature _____ °C

Water Flow Rate _____ *l/min*

CONDENSING BOILERS ONLY

The condensate drain has been installed in accordance with the manufacturer's instructions and/or BS5546/BS6798 Yes ☐

ALL INSTALLATIONS

If required by the manufacturer, record the following CO_2 _____ % OR CO _____ *ppm* OR CO/CO_2 Ratio _____

The heating and hot water system complies with the appropriate Building Regulations Yes ☐

The boiler and associated products have been installed and commissioned in accordance with the manufacturer's instructions Yes ☐

The operation of the boiler and system controls have been demonstrated to and understood by the customer Yes ☐

The manufacturer's literature, including Benchmark Checklist and Service Record, has been explained and left with the customer Yes ☐

Commissioning Engineer's Signature _____

Customer's Signature _____

(To confirm satisfactory demonstration and receipt of manufacturer's literature)

*All installations in England and Wales must be notified to Local Authority Building Control (LABC) either directly or through a Competent Persons Scheme. A Building Regulations Compliance Certificate will then be issued to the customer.

©Heating and Hotwater Industry Council (HHIC)

benchmark COLLECTIVE MARK

THE MARK OF QUALITY FOR THE INSTALLATION, COMMISSIONING AND SERVICING OF DOMESTIC HEATING AND HOT WATER SYSTEMS

www.centralheating.co.uk

SERVICE INTERVAL RECORD

It is recommended that your heating system is serviced regularly
and that you complete the appropriate Service Interval Record Below .

Service Provider. Before completing the appropriate Service Interval Record below, please ensure you have carried out the service as described in the boiler manufacturer's instructions. Always use the manufacturer's specified spare part when replacing all controls.

SERVICE 1 Date

Energy Efficiency Checklist completed? Yes ☐ No ☐

Engineer Name

Company Name

Telephone Number

Engineer ID Number

Comments

Signature

SERVICE 2 Date

Energy Efficiency Checklist completed? Yes ☐ No ☐

Engineer Name

Company Name

Telephone Number

Engineer ID Number

Comments

Signature

SERVICE 3 Date

Energy Efficiency Checklist completed? Yes ☐ No ☐

Engineer Name

Company Name

Telephone Number

Engineer ID Number

Comments

Signature

SERVICE 4 Date

Energy Efficiency Checklist completed? Yes ☐ No ☐

Engineer Name

Company Name

Telephone Number

Engineer ID Number

Comments

Signature

SERVICE 5 Date

Energy Efficiency Checklist completed? Yes ☐ No ☐

Engineer Name

Company Name

Telephone Number

Engineer ID Number

Comments

Signature

SERVICE 6 Date

Energy Efficiency Checklist completed? Yes ☐ No ☐

Engineer Name

Company Name

Telephone Number

Engineer ID Number

Comments

Signature

SERVICE 7 Date

Energy Efficiency Checklist completed? Yes ☐ No ☐

Engineer Name

Company Name

Telephone Number

Engineer ID Number

Comments

Signature

SERVICE 8 Date

Energy Efficiency Checklist completed? Yes ☐ No ☐

Engineer Name

Company Name

Telephone Number

Engineer ID Number

Comments

Signature

SERVICE 9 Date

Energy Efficiency Checklist completed? Yes ☐ No ☐

Engineer Name

Company Name

Telephone Number

Engineer ID Number

Comments

Signature

SERVICE 10 Date

Energy Efficiency Checklist completed? Yes ☐ No ☐

Engineer Name

Company Name

Telephone Number

Engineer ID Number

Comments

Signature

spares & parts online
IBASIS.CO.UK

spares & parts online
IBASIS.CO.UK

spares & parts online
IBASIS.CO.UK

Subject to engineering changes

0020167175_01 - 02/13

GLOW-WORM

Nottingham Road,
Belper, Derbyshire.
DE56 1JT

www.glow-worm.co.uk

Because of our constant endeavour for improvement, details may vary slightly from those shown in these instructions.

Glow-worm