Glow-worm

The energy you need

Installation and maintenance instructions

Easicom 2

24c

28c

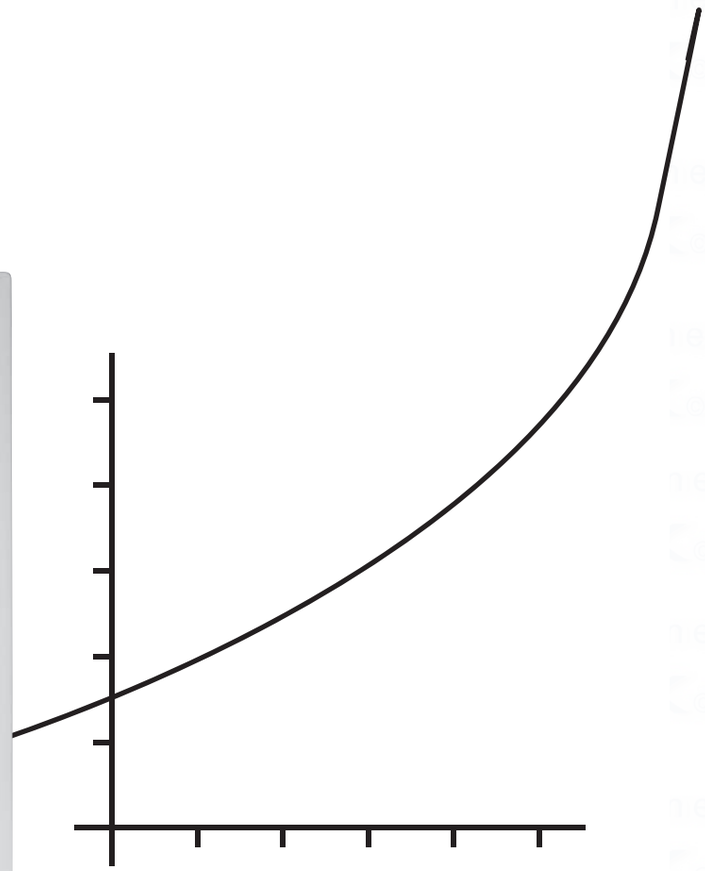

GB, IE

Contents

1 Safety ... 4
1.1 Action-related warnings ... 4
1.2 Risk caused by inadequate qualifications ... 4
1.3 Intended use ... 4
1.4 General safety information ... 4
1.5 Regulations (directives, laws, standards) ... 6
2 Notes on the documentation ... 7
2.1 Observing other applicable documents ... 7
2.2 Storing documents ... 7
2.3 Applicability of the instructions ... 7
3 Product description ... 7
3.1 Serial number ... 7
3.2 Information on the identification plate ... 7
3.3 Functional elements: Combination unit ... 8
3.4 CE label ... 8
4 Installation ... 8
4.1 Transporting the unit ... 8
4.2 Unpacking the product ... 8
4.3 Checking the scope of delivery ... 8
4.4 Dimensions ... 9
4.5 Minimum clearances ... 9
4.6 Clearance from combustible components ... 9
4.7 Using the installation template ... 9
4.8 Wall-mounting the product ... 9
4.9 Removing/installing the front casing ... 10
4.10 Removing/installing the side section ... 10
5 Installation ... 10
5.1 Checking the gas meter ... 11
5.2 Gas and water connections ... 11
5.3 Connecting the drain line for the expansion relief valve ... 11
5.4 Connecting the condensate drain pipework ... 12
5.5 Connecting the drain cock ... 12
5.6 flue gas installation ... 12
5.7 Electrical installation ... 13
6 Operation ... 15
6.1 Using diagnostics codes ... 15
6.2 Displaying the status codes ... 15
6.3 Using check programmes ... 15
7 Start-up ... 16
7.1 Carrying out the initial start-up ... 16
7.2 Checking the factory setting ... 16
7.3 Checking and treating the heating water/filling and supplementary water ... 16
7.4 Avoiding danger arising from insufficient water pressure ... 17
7.5 Switching on the product ... 17
7.6 Filling and purging the heating installation ... 17
7.7 Filling the condensate siphon ... 18
7.8 Filling the hot water circuit ... 18
7.9 Checking and adjusting the gas settings ... 18
7.10 Checking function and leak-tightness ... 20
8 Adapting the unit to the heating installation ... 20
8.1 Burner anti-cycling time ... 20
8.2 Setting the pump output ... 20
8.3 Setting the bypass ... 21
9 Adjusting the hot water temperature ... 21
9.1 Setting the hot water temperature ... 21
10 Handing the product over to the operator ... 21
11 Inspection and maintenance ... 21
11.1 Observing inspection and maintenance intervals ... 21
11.2 Procuring spare parts ... 21
11.3 Checking the CO_2 content ... 21
11.4 Setting the CO_2 content ... 22
11.5 Removing the gas-air mixture unit ... 22
11.6 Cleaning the heat exchanger ... 23
11.7 Checking the burner ... 23
11.8 Checking the ignition electrode ... 23
11.9 Cleaning the condensate tray ... 23
11.10 Cleaning the condensate siphon ... 24
11.11 Cleaning the filter in the cold water inlet ... 24
11.12 Cleaning the heating filter ... 24
11.13 Installing the gas-air mixture unit ... 25
11.14 Draining the product ... 25
11.15 Checking the pre-charge pressure of the expansion vessel ... 25
11.16 Completing inspection and maintenance work ... 25
12 Troubleshooting ... 25
12.1 Rectifying faults ... 25
12.2 Calling up the fault memory ... 25
12.3 Deleting the fault memory ... 25
12.4 Resetting parameters to factory settings ... 25
12.5 Preparing the repair work ... 25
12.6 Replacing defective components ... 25
12.7 Completing repair work ... 28
13 Decommissioning the product ... 28
14 Customer service ... 28
Appendix ... 29
A Check programmes – Overview ... 29
B Overview of diagnostics codes ... 29
C Status codes – Overview ... 33
D Overview of fault codes ... 34
E Connection diagram: Combination unit ... 37
F Inspection and maintenance work – Overview ... 38
G Opening in the air/flue pipe ... 39
G.1 Positioning of the opening of a fan-supported flue gas pipe ... 39
G.2 Text from BS 5440-1 on fan-supported flue gas pipes ... 40
G.3 Opening of the flue pipe below eaves and balconies ... 40
H Commissioning Checklist ... 41
I Combustion chart ... 44
J Lengths of the air/flue pipe ... 45

K Technical data 45
Index 47

1 Safety

1.1 Action-related warnings

Classification of action-related warnings

The action-related warnings are classified in accordance with the severity of the possible danger using the following warning signs and signal words:

Warning symbols and signal words

Danger!
Imminent danger to life or risk of severe personal injury

Danger!
Risk of death from electric shock

Warning.
Risk of minor personal injury

Caution.
Risk of material or environmental damage

1.2 Risk caused by inadequate qualifications

Assembly and disassembly, installation, start-up, maintenance, repairs and decommissioning must only be carried out by a competent person who is sufficiently qualified to observe all of the instructions that come with the product, to proceed in accordance with the current state of the art, and to comply with all applicable directives, standards, laws and other regulations.

1.3 Intended use

There is a risk of injury or death to the user or others, or of damage to the product and other property in the event of improper use or use for which it is not intended.

The product is intended as a heat generator for closed central heating installations and for hot water generation.

The products referred to in these instructions must only be installed and operated in conjunction with the flue pipe accessories listed in other applicable documents.

Exceptions: For C63 and B23P installation types, follow the specifications in these instructions.

Intended use includes the following:

- observance of accompanying operating, installation and servicing instructions for the product and any other system components
- installing and fitting the product in accordance with the product and system approval
- compliance with all inspection and maintenance conditions listed in the instructions.

Intended use also covers installation in accordance with the IP class.

Any other use that is not specified in these instructions, or use beyond that specified in this document shall be considered improper use. Any direct commercial or industrial use is also deemed to be improper.

Caution.

Improper use of any kind is prohibited.

1.4 General safety information

1.4.1 Risk of death from escaping gas

What to do if you smell gas in the building:

- ▸ Avoid rooms that smell of gas.
- ▸ If possible, open doors and windows fully and ensure adequate ventilation.
- ▸ Do not use naked flames (e.g. lighters, matches).
- ▸ Do not smoke.
- ▸ Do not use any electrical switches, mains plugs, doorbells, telephones or other communication systems in the building.
- ▸ If it is safe to do so, close the emergency control valve or the main isolator.
- ▸ If possible, close the gas isolator cock on the product.
- ▸ Warn other occupants in the building by yelling or banging on doors or walls.
- ▸ Leave the building immediately and ensure that others do not enter the building.
- ▸ Notify the gas supply company or National Grid Transco +44 (0) 800 111999 by telephone from outside of the building.

1.4.2 Risk of death from escaping flue gas

If you operate the product with an empty condensate siphon, flue gas may escape into the room air.

- In order to operate the product, ensure that the condensate siphon is always full.

1.4.3 Risk of death due to blocked or leaking flue gas routes

Installation errors, damage, tampering, unauthorised installation sites or similar can cause flue gas to escape and result in a risk of poisoning.

What to do if you smell flue gas in the property:

- Open all accessible doors and windows fully to provide ventilation.
- Switch off the product.
- Check the flue gas routes in the product and the flue gas diversions.

1.4.4 Risk of death due to explosive and flammable materials

- Do not use or store explosive or flammable materials (e.g. petrol, paper, paint) in the installation room of the product.

1.4.5 Risk of death from electric shock

There is a risk of death from electric shock if you touch live components.

Before commencing work on the product:

- Unplug the mains plug.
- Or disconnect the product from the power supply by switching off all power supplies (electrical partition with a contact opening of at least 3 mm, e.g. fuse or line protection switch).
- Secure against being switched back on again.
- Wait for at least 3 minutes until the condensers have discharged.

1.4.6 Risk of death due to lack of safety devices

The schematic drawings included in this document do not show all safety devices required for correct installation.

- Install the necessary safety devices in the system.
- Observe the applicable national and international laws, standards and guidelines.

1.4.7 Risk of poisoning and burns caused by escaping hot flue gases

- Only operate the product if the air/flue pipe has been completely installed.
- With the exception of short periods for testing purposes, only operate the product when the front casing is installed and closed.

1.4.8 Risk of being burned or scalded by hot components

- Only carry out work on these components once they have cooled down.

1.4.9 Risk of injury during transport due to a high product weight.

- Make sure that the product is transported by at least two people.

1.4.10 Risk of corrosion damage due to unsuitable combustion and room air

Sprays, solvents, chlorinated cleaning agents, paint, adhesives, ammonia compounds, dust or similar substances may lead to corrosion on the product and in the air/flue pipe.

- Ensure that the supply of combustion air is always free of fluorine, chlorine, sulphur, dust, etc.
- Ensure that no chemical substances are stored at the installation site.
- Ensure that the combustion air is not routed through chimneys which have previously been used with floor-standing oil-fired boilers, or with other boilers, which could cause soot to build up in the chimney.
- If you are installing the product in hairdressing salons, painter's or joiner's workshops, cleaning businesses or similar locations, choose a separate installation room in which a combustion air supply is ensured that is technically free of chemical substances.

1.4.11 Risk of material damage caused by frost

- Do not install the product in rooms prone to frost.

1.4.12 Risk of material damage caused by using an unsuitable tool

- Use the correct tool to tighten or loosen screw connections.

1.5 Regulations (directives, laws, standards)

- Observe the national regulations, standards, guidelines and laws.

2 Notes on the documentation

2.1 Observing other applicable documents

- You must observe all the operating and installation instructions included with the system components.

2.2 Storing documents

- Pass these instructions and all other applicable documents on to the system operator.

2.3 Applicability of the instructions

These instructions apply only to:

Product article number

	Article number	Gas Council Number
EASICOM 2 24c	0010016114	47-019-22
EASICOM 2 28c	0010016116	47-019-23

These products are only designed for natural gas systems.

3 Product description

3.1 Serial number

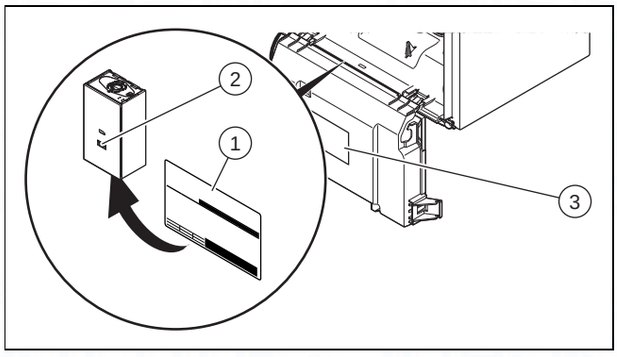

The serial number is located on the identification plate **(1)** and in the short operating instructions **(2)** (→ Page 7).

Stickers showing the serial number are on the back of the electronics box **(3)**.

3.2 Information on the identification plate

The identification plate is mounted on the underside of the product in the factory.

The identification plate keeps record of the country in which the product is to be installed.

Information on the identification plate	Meaning
	Barcode with serial number
Serial number	For quality control purposes; 3rd and 4th digits = year of production For quality control purposes; 5th and 6th digits = week of production For identification purposes; 7th to 16th digits = product article number For quality control purposes; 17th to 20th digits = place of manufacture
Easicom 2	Product description
2H, G20 - 20 mbar (2 kPa)	Factory setting for type of gas and gas connection pressure
Cat.	Approved gas category
Condensing technology	Efficiency class of the boiler in accordance with EC Directive 92/42/EEC
Type: Xx3(x)	Permissible flue gas connections
PMS	Maximum water pressure in heating mode
PMW	Maximum water pressure in hot water handling mode
V/Hz	Electric connection
W	Max. electrical power consumption
IP	Level of protection
	Heating mode
	Hot water generation
*P*n	Nominal heat output range in heating mode
P	Nominal heat output range in hot water handling mode
Qn	Nominal heating load range in heating mode
Qnw	Nominal heating load range in hot water handling mode
$T_{max.}$	Max. flow temperature
NOx	NOx class for the product
Code (DSN)	Specific product code
	→ "CE label" section
	Read the instructions.
	→ "Recycling and disposal" section
GC no.	Gas council number

3.3 Functional elements: Combination unit

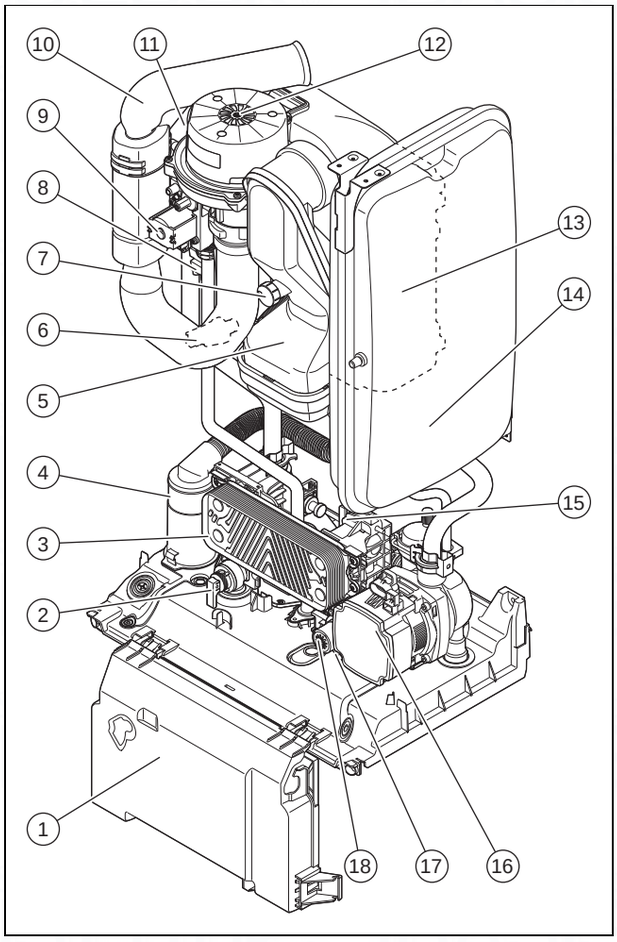

1	Electronics box	10	Air intake pipe
2	Heating circuit expansion relief valve	11	Ignition electrode
3	Plate heat exchanger	12	Fan
4	Condensate siphon	13	Primary heat exchanger
5	Flue pipe	14	Heating expansion vessel
6	Pressure sensor	15	Volume flow sensor
7	Flue gas analysis point	16	Heating pump
8	Ignition transformer	17	Bypass
9	Gas valve	18	3-way valve

3.4 CE label

The CE label shows that the products comply with the basic requirements of the applicable directives as stated on the identification plate.

The declaration of conformity can be viewed at the manufacturer's site.

4 Installation

4.1 Transporting the unit

Important: With regard to the regulations of 1992 concerning the manual handling of loads, the unit exceeds the weight that can be lifted by a single person.

4.1.1 General

- ► Hold the load as close as possible to your body. Avoid rotational movements. Instead, reposition your feet.
- ► If the unit is being lifted by two persons, ensure your movements are coordinated during lifting.
- ► Avoid bending your upper body – do not lean forwards or to the side.
- ► Wear suitable non-slip protective gloves in order to protect your hands against sharp edges. Ensure that you are carrying the load securely.
- ► If required, get somebody to assist you in this.

4.1.2 Unloading the box from the delivery van

- ► It is recommended that two people lift the unit together.
- ► Lift the box using the straps provided.
- ► Use safe lifting techniques – keep your back straight and bend your legs at the knee.
- ► Hold the load as close as possible to your body.
- ► If the unit is being lifted by two persons, ensure your movements are coordinated during lifting.
- ► If required, get somebody to assist you in this.

4.2 Unpacking the product

1. Remove the product from its box.
2. Remove the protective film from all of the product's components.

4.3 Checking the scope of delivery

- ► Check that the scope of delivery is complete.

Quantity	Description
1	Heat generator
1	Bag with accessories – Bag with seals – Condensate drain hose – Drain spigot of the expansion relief valve – Installation template – Hanging bracket – Bag containing the hydraulic connections
1	Enclosed documentation

4.4 Dimensions

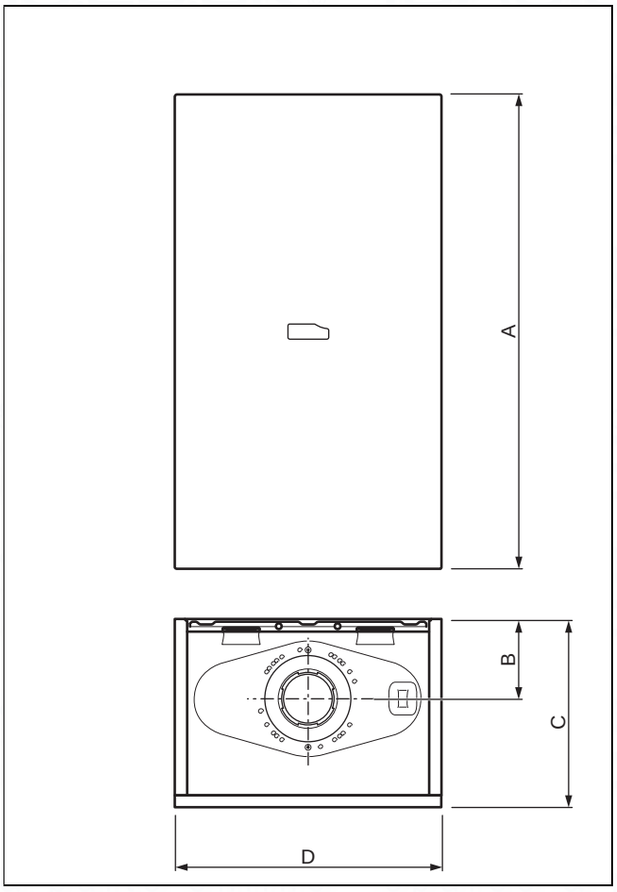

Dimensions

A	B	C	D
740 mm	130 mm	300 mm	418 mm

4.5 Minimum clearances

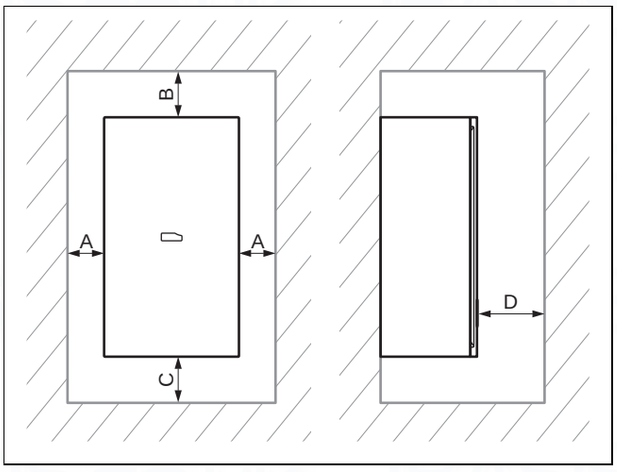

Minimum clearances

A	B	C	D	D
≥ 0 mm	≥ 300 mm	≥ 300 mm	≥ 600 mm	≥ 5 mm **Note** Cabinet-type casing

4.6 Clearance from combustible components

It is not necessary to maintain a clearance between the product and components made of combustible materials.

4.7 Using the installation template

► Use the installation template to ascertain the locations at which you need to drill holes and make breakthroughs.

4.8 Wall-mounting the product

1. Check whether the wall has sufficient load-bearing capacity to bear the weight of the product under operating conditions (operational weight).
2. Wall-mount the product as described using the adapted fixing material provided on-site.

Conditions: The load-bearing capacity of the wall is sufficient, The fixing material may be used for the wall

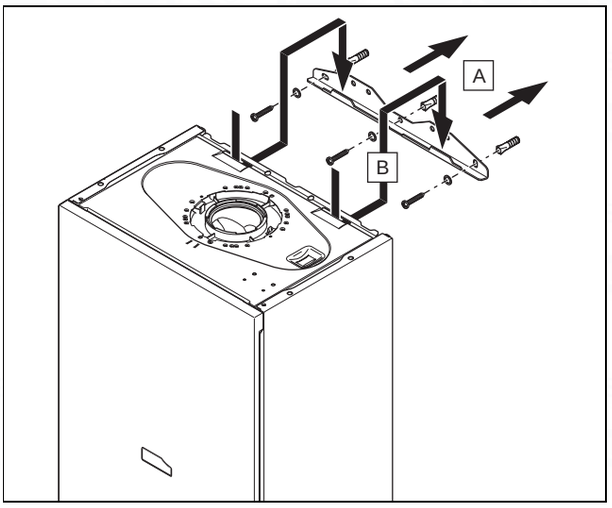

► Wall-mount the product as described.

Conditions: The load-bearing capacity of the wall is not sufficient

► Ensure that wall-mounting apparatus on-site has a sufficient load-bearing capacity. Use individual stands or primary walling, for example.

► Do not wall-mount the product if you cannot provide wall-mounting apparatus with a sufficient load-bearing capacity.

4.9 Removing/installing the front casing

4.9.1 Removing the front casing

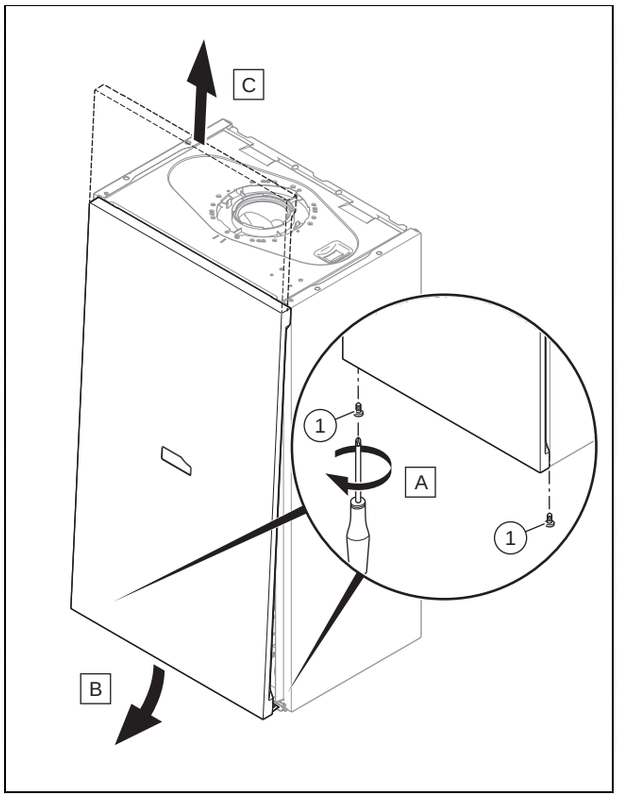

1. Undo the two screws **(1)**.
2. Gently press the front casing backwards in the centre so that the latching lug is released.
3. Pull the front casing forwards at the bottom edge.
4. Lift the front casing upwards from the bracket.

4.9.2 Fitting the front panel

► Refit the components in the reverse order.

4.10 Removing/installing the side section

4.10.1 Removing the side section

Caution.

Risk of material damage caused by mechanical deformation.

Removing **both** side sections may cause mechanical distortion in the product, which may cause damage to the piping, for example, and potentially result in leaks.

► Always remove **only one** side section – never both side sections at the same time.

Note

If there is sufficient lateral clearance (at least 50 mm), you can remove the side section to facilitate maintenance or repair work.

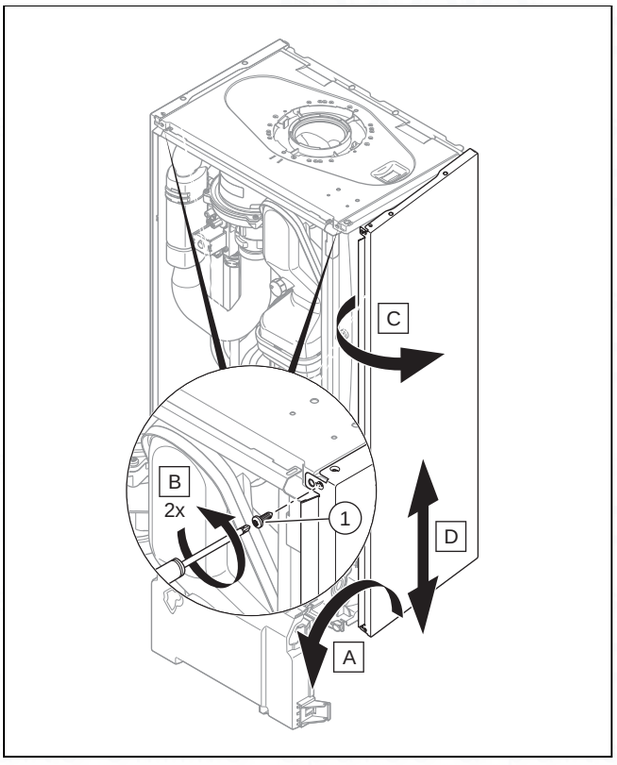

1. Tilt the electronics box forward.
2. Hold on to the side section so that it cannot fall and unscrew both screws **(1)**, one from the top and one from the bottom.
3. Tilt the side section to the outside and move it downwards and out.

4.10.2 Installing the side section

► Refit the components in the reverse order.

5 Installation

Danger!

Risk of explosion or scalding caused by incorrect installation.

Stresses in the supply line can cause leaks.

► Make sure there is no voltage in the supply lines when they are installed.

Caution.

Risk of damage caused by contaminated lines.

Foreign bodies, such as welding remnants, sealing residue or dirt in the water pipes, may cause damage to the boiler.

► Flush the heating installation thoroughly prior to installation.

5.1 Checking the gas meter

► Make sure that the existing gas meter is capable of passing the rate of gas supply required.

5.2 Gas and water connections

Caution.

Risk of damage caused by incorrect gas connection installation.

Excess test pressure or operating pressure may cause damage to the gas valve.

► Check the leak-tightness of the gas valve using a maximum pressure of 1.1 kPa (110 mbar).

Caution.

Risk of damage caused by corrosion.

If non-diffusion-tight plastic pipes are used in the heating installation, this may cause air to enter the heating water and corrosion of the heat generation circuit and the boiler.

► If using non-diffusion-tight plastic pipes in the heating installation, separate the system by installing an external heat exchanger between the boiler and the heating installation.

Caution.

Risk of material damage due to heat transfer during soldering.

► Do not solder the connection pieces if the connection pieces are screwed to the service valves.

Note

We recommend that you provide the water pipes to the boiler outlet and to the system with thermal insulation.

Preliminary work

1. Check that the system volume and the volumetric capacity of the expansion vessel are the same.
   ▽ If the volume of the expansion vessel is insufficient for the system.
   ► Install an additional expansion vessel in the heating return, as close to the product as possible.
   ► Install a non-return flap at the product's outlet (heating flow).
2. Ensure that the system has the following components:
   – A stop cock in the cold water supply
   – A stop cock in the gas line
   – A filling and draining device in the heating installation

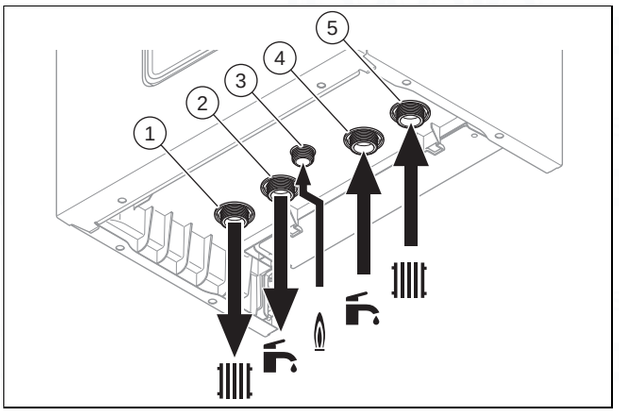

1	Heating flow connection, G3/4	4	Connection for the cold water supply line, G3/4
2	Hot water connection, G3/4	5	Heating return connection, G3/4
3	Gas connection, G1/2		

1. Connect the water and gas connections in accordance with the applicable standards.
2. Purge the gas line before start-up.
3. Check whether the connections (→ Page 20) are leak-tight.

5.3 Connecting the drain line for the expansion relief valve

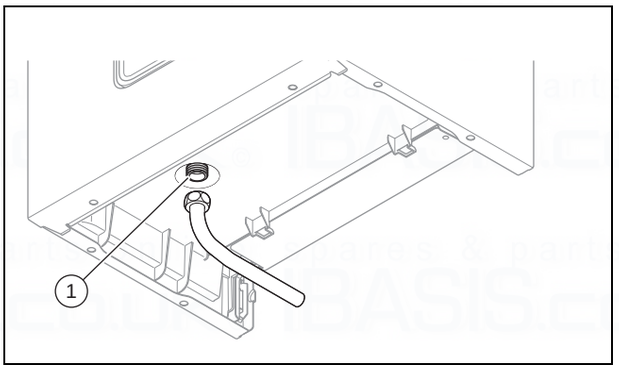

► Ensure that the pipeline is visible.

► The pipe must have a continuous fall and be routed to a position so that any discharge of water, possibly boiling, or steam cannot create any danger to persons, damage to property or external electrical components and wiring.

◁ The components must be set up in such a way that you can see the water flowing out.

5.4 Connecting the condensate drain pipework

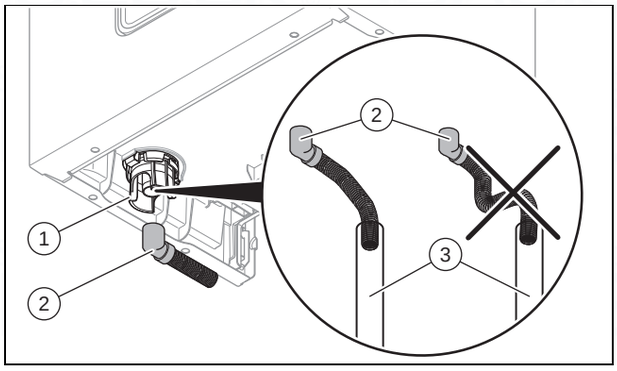

- Follow the instructions listed here and observe any legal directives and local regulations on condensate discharge.
- Use PVC or another material that is suitable for draining the non-neutralised condensate.
- If you cannot guarantee that the materials from which the drain lines are made are suitable, install a system for neutralising the condensate.
- Ensure that the connection between the condensate drain pipework and the drain hose is not air-tight.

Note
The condensate drain pipework must have a continuous fall (45 mm per metre) and should whenever possible terminate at a suitable drain point within the heated envelope of the building that will remain frost free under long periods of low external temperatures.

- Connect the condensate siphon **(1)**. Use the supplied drain hose **(2)** for this.
- Connect condensate drain pipework (21.5 mm, not included in the scope of delivery) **(3)** to the drain hose **(2)**.
- During installation remove all burs from inside of cut pipe work and avoid excessive adhesive which may trap small pockets of water close to the pipe wall which can freeze and build into a larger ice plug.
- As with other pipe work insulate the condensate discharge pipe to minimise any risk of freezing and beware when crossing cavities that the fall is maintained and the pipe sleeved.

You can find further information in BS 6789: "Specification for installing and maintaining gas-fired boilers with a nominal heat loading less than 70 kW".

5.5 Connecting the drain cock

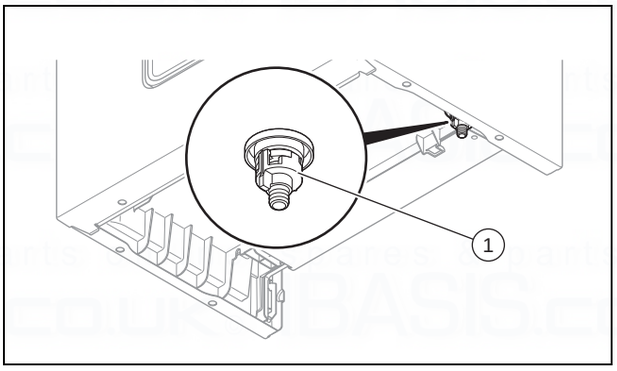

- Connect a hose to the drain cock **(1)** and guide the free end of the hose to a suitable outflow location.

5.6 flue gas installation

5.6.1 Installing the air/flue pipe

Caution.
Risk of poisoning due to escaping flue gas.

Mineral-oil-based greases can damage the seals.

- Instead of grease, use only water or commercially available soft soap to aid installation.

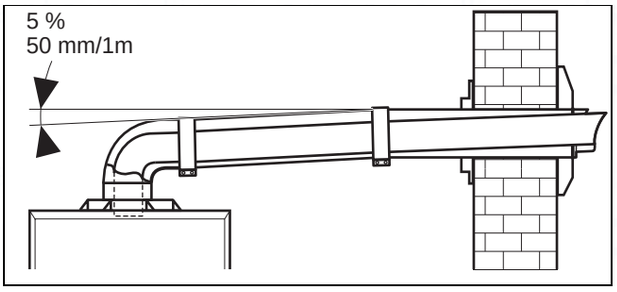

1. Ensure that there is a minimum downward gradient of 5% between the elbow and the terminal on the air/flue pipe so that the condensate can flow back to the product.
2. Install the flue gas pipe in accordance with the installation instructions that are included in the scope of delivery for the air/flue pipe.
3. You can find out which air/flue pipes may be used by consulting the enclosed air/flue pipe installation manual.
4. Install the flue gas pipe in accordance with the installation instructions that are included in the scope of delivery for the air/flue pipe.

5.6.2 Air/flue gas system

5.6.2.1 Horizontal air/flue gas system

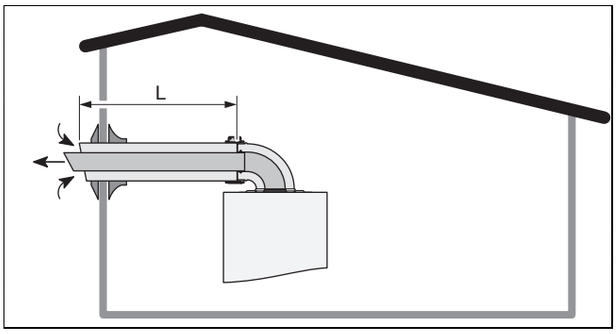

The openings in an attachment for separate lines must lead to a 50 cm-sided square.

For each additional 90° elbow (or two 45° elbows) that is required, the length **(L)** must be reduced by 1 m.

Length of the C13 type flue pipe (→ Page 45)

5.6.2.2 Vertical air/flue gas system

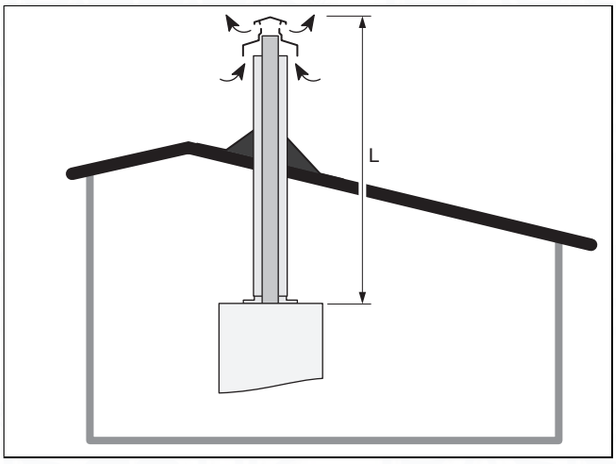

The openings in an attachment for separate lines must lead to a 50 cm-sided square.

For each additional 90° elbow (or two 45° elbows) that is required, the length **(L)** must be reduced by 1 m.

Length of the C33 type flue pipe (→ Page 45)

5.7 Electrical installation

Danger!

Risk of death from electric shock!

The mains connection terminals L and N remain live even if the product is switched off:

- ► Switch off the power supply.
- ► Secure the power supply against being switched on again.

5.7.1 Opening and closing the electronics box

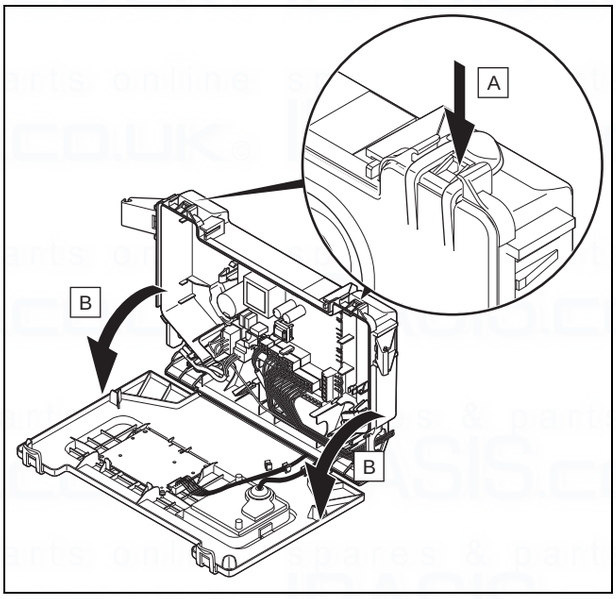

1. To open the electronics box, follow the instructions in the specified sequence.
2. To close the electronics box, follow the instructions in reverse order.

5.7.2 Cable route

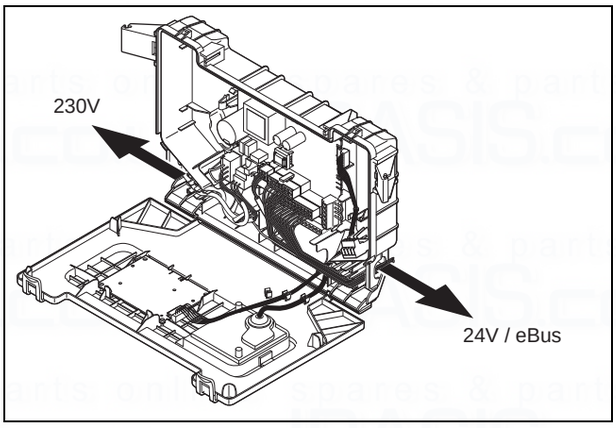

1 24-V eBUS cable route

2 230-V eBUS cable route

5.7.3 Carrying out the wiring

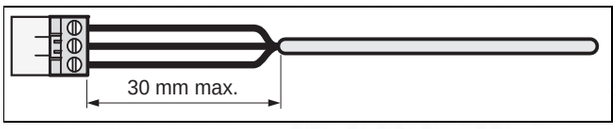

1. Shorten the connection cables to the appropriate lengths to prevent them from causing damage inside the electronics box.
2. Screw the plug to the connection cable.
3. Plug the plug into the slot provided on the PCB.

5.7.4 Establishing the power supply

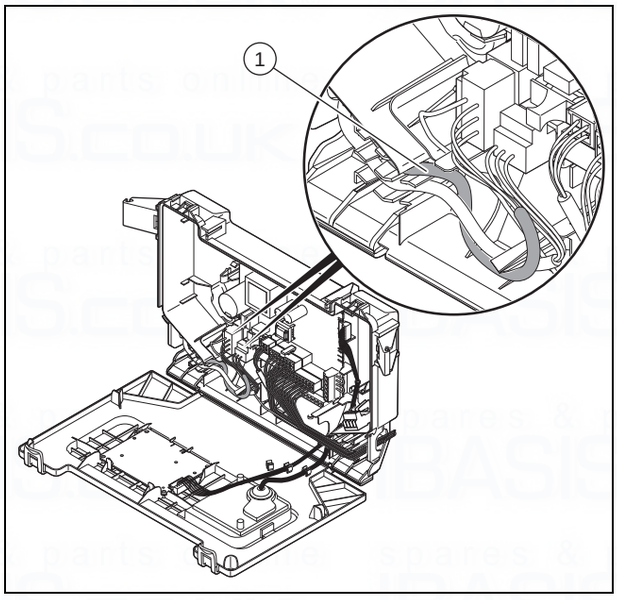

1. Observe all applicable regulations.
   – The applicable regulations state that the connection must be made via an electrical partition with a contact opening of at least 3 mm at each pole.
2. Make sure that the rated voltage of the mains is 230 V.
3. Provide one common electricity supply for the boiler and for the corresponding controller:
   – Power supply: Single-phase, 230 V, 50 Hz
   – Fuse protection: ≤ 3 A
4. Open the electronics box.
5. Observe the routing of the power supply cable **(1)** in the electronics box in order to guarantee the strain relief.

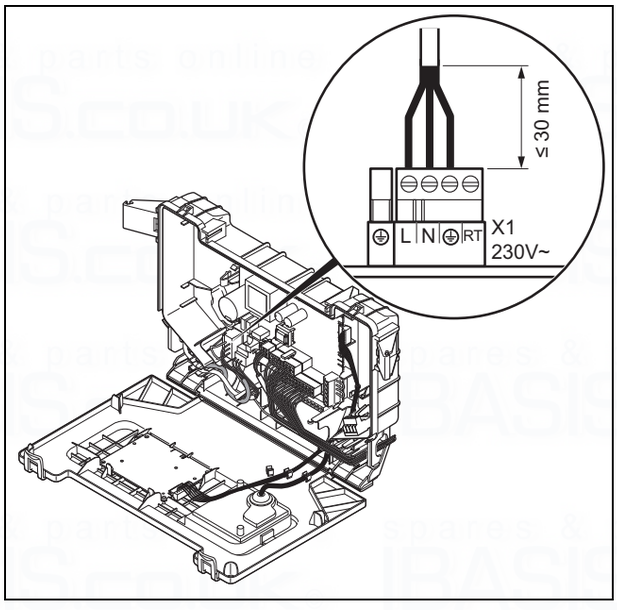

6. Carry out the wiring. (→ Page 13)
7. Close the electronics box.
8. Screw the supplied plug to a three-core mains connection cable that complies with the relevant standards.
9. Connect the plug for the mains connection cable.
10. Make sure that access to the mains connection is always freely available and is not covered or blocked by an obstruction.

5.7.5 Connecting controllers to the electronic system

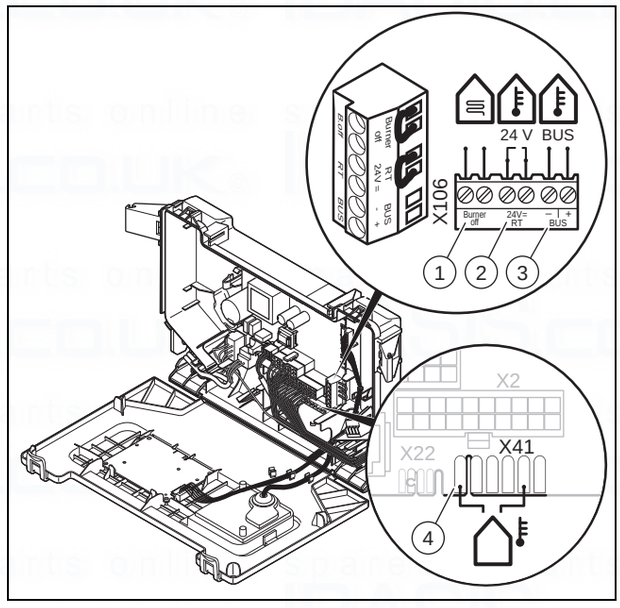

1	Safety thermostat for floor-standing heating	3	eBUS controller or radio receiver unit
2	24 V controller	4	Outside temperature sensor, wired

1. Open the electronics box.
2. Carry out the wiring. (→ Page 13)
3. Connect the individual components depending on the type of installation.

Conditions: If installing a multi-circuit controller.

► Change the pump operating mode **(d.18)** from Eco (intermittent pump operating mode) to Comfort (continuous pump operating mode).

Conditions: If you are connecting a controller (230 V).

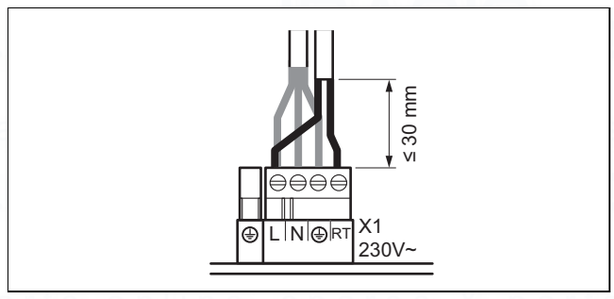

► Connect the controller to the main plug.
► Remove the bridge from the plug 24V=RT.

4. Close the electronics box.

6 Operation

6.1 Using diagnostics codes

You can use the parameters marked as adjustable in the table of diagnostics codes to adapt the product to the system and customer requirements.

Overview of diagnostics codes (→ Page 29)

6.1.1 Activating diagnostics codes

1. Press and hold the mode button for 7 seconds.
   - ◁ 00 is shown in the display.
2. Press the − or + button to set the value.
   - ◁ The access code **(96)** is reserved for the competent person.
   - ◁ The access code **(35)** is reserved for the customer service.
3. Press the mode button to confirm.
   - ◁ d00 is shown in the display.

6.1.2 Setting a diagnostics code

1. Press the − or + button to select the diagnostics code.
2. Press the mode button to confirm.
   - ◁ The value and/or status of the diagnostics code is shown in the display.
3. Press the − or + button to set the value.
4. If you allow the value to flash for three seconds, the setting is automatically confirmed.
   - ◁ ✓ is shown in the display for 1 second.

> **Note**
> You can manually confirm the setting at any time by pressing and holding the mode button for less than 3 seconds.

5. Proceed accordingly for all parameters that need to be changed.
6. Press and hold the mode button for 3 seconds to finish configuring the diagnostics codes.
   - ◁ The display switches to the basic display.

6.2 Displaying the status codes

The status codes display the product's current operating status.

Status codes – Overview (→ Page 33)

6.2.1 Activating the status codes display

1. Hold the + button down for more than 7 seconds.
   - ◁ **S.XX** is shown on the display, followed by the heating flow temperature, the internal system pressure and the cylinder temperature (depending on the version).
2. Press the mode button to exit this menu.
   - ◁ The display switches to the basic display.

6.3 Using check programmes

By activating various check programmes, you can trigger various special functions on the product.

Check programmes – Overview (→ Page 29)

6.3.1 Calling up the check programmes

1. Hold the ⏻ button down for more than 5 seconds.
   - ◁ All symbols are shown in the display.
   - ◁ -|- is shown in the display.
2. Press and hold the mode button for five seconds.
   - ◁ P01 is shown in the display.
3. Press the − or + button to select the check programme.
4. Press the mode button to confirm.
   - ◁ **on** is shown in the display and the programme starts.
5. Press the − and + buttons at the same time whilst running a check programme.
   - ◁ The heating water temperature and the filling pressure for the heating installation are shown alternately in the display.
6. Press the mode button to return to the check programme.
   - ◁ The display shows the check programme.
7. Press the mode button to finish the check programme.
   - ◁ **OFF** is shown in the display.
8. Press and hold the mode button for 3 seconds to finish the check programmes.
   - ◁ **End** is shown in the display.
   - ◁ The display switches to the basic display.

> **Note**
> If you do not press any button for 15 minutes, the current programme is automatically cancelled and the basic display is shown.

6.3.2 Displaying the pressure and temperature of the heating during a check programme

1. Press the −/+ buttons simultaneously.
   - ◁ Display the filling pressure in the heating installation.
   - ◁ Display the heating flow temperature.
2. Press the mode button to display the check programme currently running.

7 Start-up

7.1 Carrying out the initial start-up

Initial start-up must be carried out by a customer service technician or an authorised competent person using the first-commissioning-checklist. The first-commissioning-checklist in the appendix (→ Page 41) of the installation instructions must be filled in and stored carefully along with the unit's documentation.

- ► Carry out the initial start-up using the first-commissioning-checklist in the appendix.
- ► Fill out and sign the first-commissioning-checklist.

7.2 Checking the factory setting

Caution.

Risk of material damage caused by making unauthorised settings.

- ► Never modify the factory setting of the gas pressure regulator of the gas valve.

The product combustion is checked on-site and pre-set to the type of gas specified on the identification plate.

- ► Check the information about the type of gas indicated on the identification plate and compare this with the type of gas available at the installation location.

Conditions: The product model **is not compatible** with the local gas type.

- ► Do not start up the product.

Conditions: The product model **is compatible** with the local gas type.

- ► Proceed as described below.

7.3 Checking and treating the heating water/filling and supplementary water

Caution.

Risk of material damage due to poor-quality heating water

- ► Ensure that the heating water is of sufficient quality.

- ► Before filling or topping up the system, check the quality of the heating water.

Checking the quality of the heating water

- ► Remove a little water from the heating circuit.
- ► Check the appearance of the heating water.
- ► If you ascertain that it contains sedimentary materials, you must desludge the system.
- ► Use a magnetic rod to check whether it contains magnetite (iron oxide).
- ► If you ascertain that it contains magnetite, clean the system and apply suitable corrosion-protection measures, or fit a magnet filter.
- ► Check the pH value of the removed water at 25 °C.
- ► If the value is below 6.5 or above 8.5, clean the system and treat the heating water.
- ► Ensure that oxygen cannot get into the heating water.
- ► Ensure that oxygen cannot get into the heating water. (→ Page 20)

Checking the filling and supplementary water

- ► Before filling the system, measure the hardness of the filling and supplementary water.

Treating the filling and supplementary water

- ► Observe all applicable national regulations and technical standards when treating the filling and supplementary water.

Provided the national regulations and technical standards do not stipulate more stringent requirements, the following applies:

You must treat the heating water in the following cases:

- If the entire filling and supplementary water quantity during the operating life of the system exceeds three times the nominal volume of the heating installation, or
- If the guideline values listed in the following table are not met, or
- if the pH value of the heating water is less than 6.5 or more than 8.5.

Total heating output	Water hardness at specific system volume[1)]					
	≤ 20 l/kW		> 20 l/kW ≤ 50 l/kW		> 50 l/kW	
kW	ppm $CaCO_3$	mol/m³	ppm $CaCO_3$	mol/m³	ppm $CaCO_3$	mol/m³
< 50	< 300	< 3	200	2	2	0.02
> 50 to ≤ 200	200	2	150	1.5	2	0.02
> 200 to ≤ 600	150	1.5	2	0.02	2	0.02
> 600	2	0.02	2	0.02	2	0.02

1) Nominal capacity in litres/heating output; in the case of multi-boiler systems, the smallest single heating output is to be used.

Caution.

The use of unsuitable heating water may cause aluminium corrosion and a resulting lack of leak-tightness.

In contrast to steel, grey cast iron or copper, for example, aluminium reacts with alkaline heating water (pH value > 8.5) to produce substantial corrosion.

- ► When using aluminium, make sure that the pH value of the heating water is between 6.5 and a maximum of 8.5.

Caution.

Risk of material damage if the heating water is treated with unsuitable additives.

Unsuitable additives may cause changes in the components, noises in heating mode and possibly subsequent damage.

- ► Do not use any unsuitable frost and corrosion protection agents, biocides or sealants.

No incompatibility with our products has been detected to date with proper use of the following additives.

► When using additives, follow the manufacturer's instructions without exception.

We accept no liability for the compatibility of any additive or its effectiveness in the rest of the heating system.

Additives for cleaning measures (subsequent flushing required)

– Fernox F3
– Sentinel X 300
– Sentinel X 400

Additives intended to remain permanently in the system

– Fernox F1
– Fernox F2
– Sentinel X 100
– Sentinel X 200

Additives for frost protection intended to remain permanently in the system

– Fernox Antifreeze Alphi 11
– Sentinel X 500

► If you have used the above-mentioned additives, inform the operator about the measures required.
► Inform the operator about the measures required for frost protection.

7.4 Avoiding danger arising from insufficient water pressure

The filling pressure must be between 0.10 and 0.15 MPa (1.0 and 1.5 bar).

Note
If the heating flow temperature is shown in the display, press and hold the ⊖ and ⊕ buttons at the same time for longer than five seconds, or temporarily deactivate heating mode in order to display the pressure.

If the heating installation extends over several storeys, higher filling pressures may be required to avoid air entering the heating installation.

If the water pressure falls below 0.05 MPa (0.5 bar), the value flashes in the display.

If the water pressure falls below 0.03 MPa (0.3 bar), the product switches off. The display shows 0.0 MPa (0.0 bar). Fault F22 will be stored in the fault list.

► Top up the water in the heating installation to start up the product again.
◁ The pressure value flashes in the display until a pressure of 0.05 MPa (0.5 bar) or higher has been reached.

7.5 Switching on the product

► Switch on the product via the main switch installed on-site.

7.6 Filling and purging the heating installation

Preliminary work

► Flush the heating installation through.

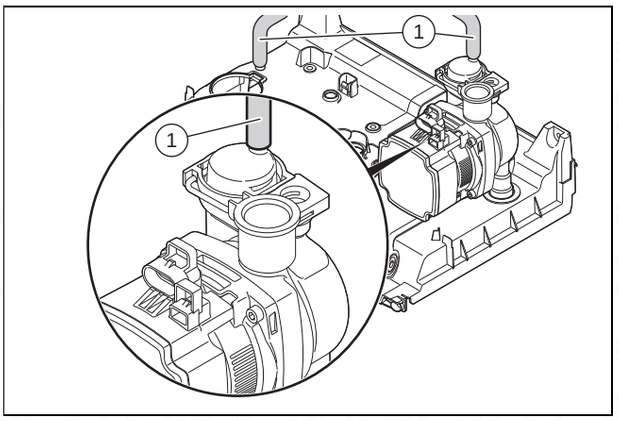

1. Check the silicone hose connection **(1)** between the pump's automatic air vent and the hydraulic console.
2. Remove the caps from the automatic air vents.
3. Fill with water until the required filling pressure is reached.
   – Recommended filling pressure: 1 … 1.5 bar
   ◁ The heating and hot water functions cannot be activated.
   ◁ The pressure value flashes in the display until a pressure of 0.05 MPa (0.5 bar) or higher has been reached.
   ◁ An automatic air vent function is activated if the pressure exceeds 0.05 MPa (0.5 bar) for longer than 15 seconds.
4. Purge each radiator until the water escapes normally, and then retighten the system's purging valves.
5. Check that all connections are leak-tight.

Conditions: If the noise persists in the boiler

► Purge the product again by activating check programme **(P.07)** and then **(P.06)**.
Check programmes – Overview (→ Page 29)

7.7 Filling the condensate siphon

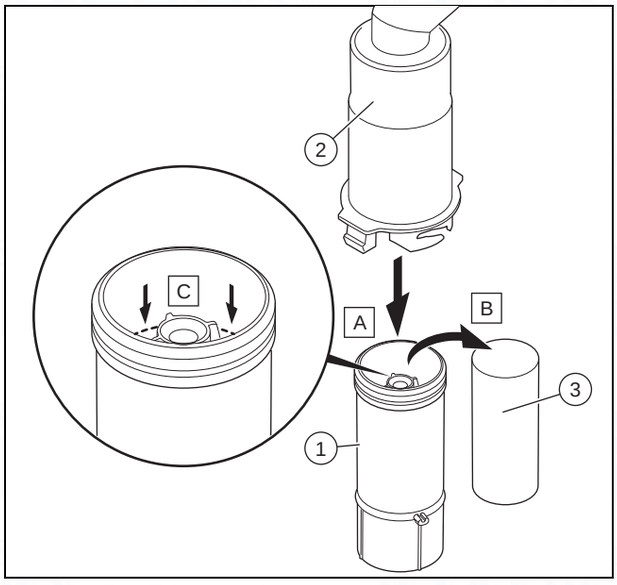

1. Unclip the lower section of the siphon **(1)** from the upper section of the siphon **(2)**.
2. Remove the float **(3)**.
3. Fill the lower section of the siphon with water up to 10 mm below the upper edge of the condensate drain pipework.
4. Re-insert the float **(3)**.

Note
Check that the float is present in the condensate siphon.

5. Clip the lower section of the siphon **(1)** into the upper section of the siphon **(2)**.

7.8 Filling the hot water circuit

1. Open the water tap to fill the hot water circuit.
2. Close the water tap once the appropriate volume of water has flowed out.
   ◁ The hot water circuit is filled.
3. Check all connections and the entire system for leaktightness.

7.9 Checking and adjusting the gas settings

Only a qualified competent person is authorised to implement the settings on the gas valve.

Each destroyed seal must be restored.

The CO2 adjusting screw must be sealed.

Never modify the factory setting of the gas pressure regulator of the gas valve.

7.9.1 Checking the gas connection pressure (gas flow pressure)

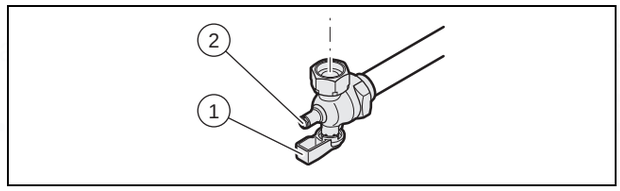

1. Ensure that the gas inlet working pressure can be obtained with all other gas appliances in the property working.
2. Close the gas isolator cock.
3. Undo the sealing screw on the measuring nipple **(2)**.
4. Connect a pressure gauge to the measuring nipple **(2)**.
5. Open the gas isolator cock.
6. Start up the product with check programme P.01.
7. In addition, ensure that maximum heat can be dissipated into the heating system by turning up the room thermostat.
8. With the boiler operating at full load check that the gas inlet working pressure at the reference test point **(2)** complies with the requirements.

Permissible connection pressure

Great Britain	**Natural gas**	**G20**	1.7 … 2 kPa (17.0 … 20 mbar)

9. Should the pressure recorded at the reference test point in the boiler be lower than indicated check if there is any blockage in the pipework or if the pipework is undersized.

Conditions: Gas flow pressure **not** in the permissible range

Caution.
Risk of material damage and operating faults caused by incorrect gas connection pressure.
If the gas connection pressure lies outside the permissible range, this can cause operating faults in and damage to the product.
- ► Do not make any adjustments to the product.
- ► Do not start up the product.

- ► If you cannot correct the failure, notify the gas supply company and proceed as follows:
- ► End check programme P.01.
- ► Allow the boiler to cool down by allowing pump overrun to operate for a minimum of two minutes.
- ► Close the gas isolator cock.
- ► Remove the pressure gauge and retighten the sealing screw **(2)** for the measuring nipple.
- ► Open the gas isolator cock **(1)**.
- ► Check the measuring nipple for gas tightness.
- ► Close the gas isolator cock **(1)**.
- ► Fit the front panel. (→ Page 10)
- ► Disconnect the product from the power mains.
- ► You must not start up the boiler.

Conditions: Gas flow pressure **in the** permissible range

- ► End the check programme **P.01**.
- ► Allow the boiler to cool down allowing pump overrun to operate for a minimum of two minutes.
- ► Close the gas isolator cock **(1)**.
- ► Remove the pressure gauge and retighten the sealing screw **(2)** for the measuring nipple.
- ► Open the gas isolator cock **(1)**.
- ► Check the measuring nipple for gas tightness.
- ► Fit the front panel. (→ Page 10)
- ► Reset boiler controls for normal operation.
- ► Record the appliance gas inlet working pressure (kPa resp. mbar) in the Benchmark gas boiler commissioning checklist.

7.9.2 Checking the leak-tightness of the flue gas system and for flue gas recirculation

1. Check that the flue gas system is intact, in accordance with British Gas TB 200.
2. If the flue gas installation is longer than 2 m, a flue gas recirculation test is strongly recommended. This test must be carried out in accordance with the instructions below.
3. Use the air analysis point **(1)** to check for flue gas recirculation.
4. Use the flue gas measuring instrument.
5. If you discover CO or CO2 in the fresh air, search for a leak in the flue gas system or for the flue gas recirculation.
6. Eliminate the damage.
7. Repeat the above-mentioned test to determine if the fresh air contains CO or CO2.
8. If you cannot eliminate the damage, you must not start up the boiler.

7.9.3 Thoroughly flushing the heating installation ("hot")

1. Operate the appliance until the boiler and the heating system are up to temperature.
2. Check the heating system for leaks.
3. Connect a hose to the drain valve located at the lowest position of the heating system.
4. Shut off the boiler, open the drain valve and all purge valves on the radiators and allow the water to flow out of the heating system and the boiler quickly and fully.
5. Close the drain valve.
6. Fill and purge the heating installation. (→ Page 17)
7. Re-fill the system until the system design pressure of 0,1 MPa (1,0 bar) is attained.

Note

The actual reading on the digital pressure gauge should ideally be 0,05 MPa (0,5 bar) plus an additional pressure corresponding to the highest point of the system above the base of the boiler – 10 m head equals an additional 1 bar reading on the pressure gauge. The minimum pressure should not be less than 0,1 MPa (1 bar) in any installation. If the system is to be treated with an inhibitor it should be applied at this stage in accordance with the manufacturer's instructions. Further information can be obtained from Sentinel, Betz Dearborn Ltd., Tel: 0151 420 9595, or Fernox, Alpha– Fry technologies. Tel: 0870 8700362.

8. Fit the front panel. (→ Page 10)

7.9.4 Checking the CO_2 content

1. Start up the product with the check programme **(P.01)** and set the value.
   – Setting value for the programme P.01: 100

   Check programmes – Overview (→ Page 29)
2. Wait until the value that is read is stable.
   – Waiting period for reading a stable value: 5 min

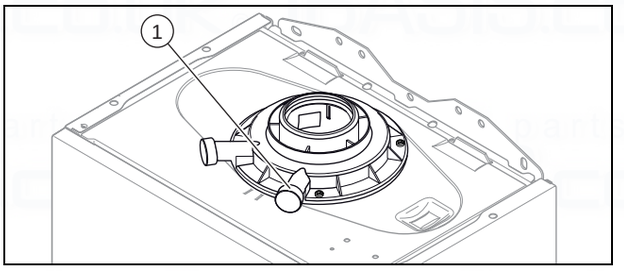

3. Unscrew the cover from the flue gas analysis point **(1)**.
4. Measure the CO_2 content at the flue gas analysis point **(1)**.
5. Compare the measured value with the corresponding value in the table.

Checking the CO_2 content

Great Britain
Removed front casing/installed front casing
Natural gas
G20
9.2 ±1 %

◁ The value is OK.

▽ The value is not OK; you cannot start up the product.

► Inform Customer Service.

7.10 Checking function and leak-tightness

Before you hand the product over to the operator:

- ► Check the gas line, the flue gas installation, the heating installation and the hot water pipes for leaks.
- ► Check that the air/flue pipe and condensate drain pipework have been installed correctly.
- ► Check that the front casing has been installed correctly.

7.10.1 Checking the heating mode

1. Activate the heating mode on the user interface.
2. Turn all thermostatic radiator valves on the radiators until they are fully open.
3. Allow the product to operate for at least 15 minutes.
4. Purge the heating installation.
5. Activate the display for the current operating status. (→ Page 15)
   Status codes – Overview (→ Page 33)
   - ◁ If the product is working correctly, the display shows S.04.

7.10.2 Checking the hot water generation

1. Activate the hot water handling mode on the user interface.
2. Open a hot water valve completely.
3. Activate the display for the current operating status. (→ Page 15)
   Status codes – Overview (→ Page 33)
   - ◁ If the product is working correctly, the display shows S.14.

8 Adapting the unit to the heating installation

You can reset/change the system parameters (section "Using diagnostics codes").

Overview of diagnostics codes (→ Page 29)

8.1 Burner anti-cycling time

To prevent frequent switching on and off of the burner and thus prevent energy losses, an electronic restart lockout is activated for a specific period each time the burner is switched off. The burner anti-cycling time is only active for the heating mode. Hot water handling mode during a burner anti-cycling time does not affect the time function element.

8.1.1 Setting the maximum burner anti-cycling time

1. Set the diagnostics code. (→ Page 15)
   Overview of diagnostics codes (→ Page 29)
2. If required, adjust the maximum burner anti-cycling time using the diagnostics code **d.02**.

8.1.2 Resetting the remaining burner anti-cycling time

- ► Hold the ⏻ button down for more than 3 seconds.
  - ◁ ⊹ is shown in the display.

8.2 Setting the pump output

Conditions: Two-stage pump

- ► If required, use diagnostics code **d.19** to adjust the setting for the operating-mode-dependent pump speed.
- ► Set the diagnostics code. (→ Page 15)
  Overview of diagnostics codes (→ Page 29)

Flow rate-pressure curves for 24 kW (pressure measured downstream of the valves)

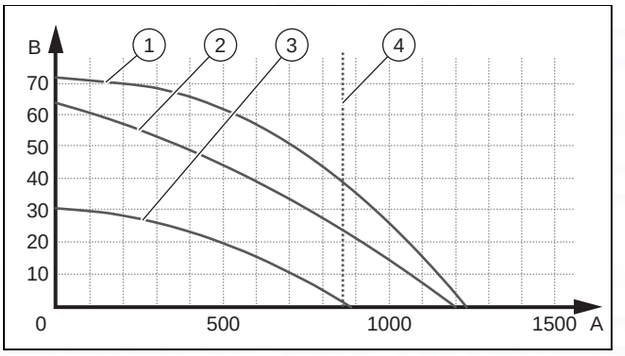

1	Maximum speed (bypass closed)	4	Flow rate at maximum output (ΔT = 20K)
2	Maximum speed (default setting for the bypass)	A	Throughput in circuit (l/h)
3	Minimum speed (default setting for the bypass)	B	Available pressure (kPa)

Flow rate-pressure curves for 28 kW (pressure measured downstream of the valves)

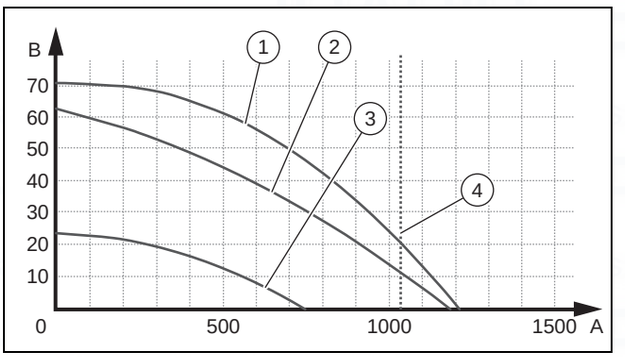

1	Maximum speed (bypass closed)	4	Flow rate at maximum output (ΔT = 20K)
2	Maximum speed (default setting for the bypass)	A	Throughput in circuit (l/h)
3	Minimum speed (default setting for the bypass)	B	Available pressure (kPa)

8.3 Setting the bypass

Conditions: Two-stage pump

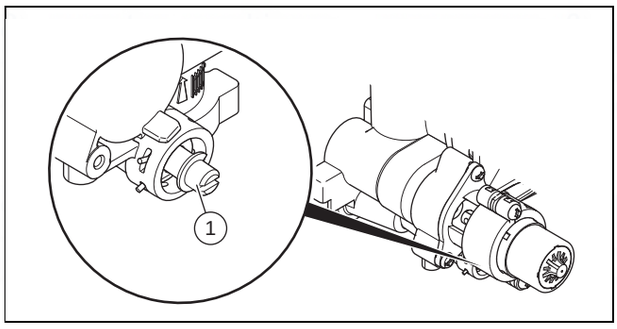

- Remove the front casing. (→ Page 10)
- Regulate the pressure using the adjusting screw **(1)**.
- Fit the front panel. (→ Page 10)

Position of the adjusting screw	Notes/application
Right-hand stop (screwed all the way in)	If the radiators do not heat up sufficiently at the default setting. In this case, you must set the pump to the maximum speed.
Mid-position (six anti-clockwise rotations)	Default setting
Five further anti-clockwise rotations starting from the mid-position	If noises are produced in the radiators or radiator valves.

9 Adjusting the hot water temperature

You can reset/change the system parameters (→ section "Using diagnostics codes").

Overview of diagnostics codes (→ Page 29)

9.1 Setting the hot water temperature

Danger!
Risk of death from Legionella.

Legionella multiply at temperatures below 60 °C.

- Ensure that the operator is familiar with all of the Anti-legionella measures in order to comply with the applicable regulations regarding legionella prevention.

- Set the hot water temperature.

Conditions: Water hardness: > 3.57 mol/m³

  – Hot water temperature: ≤ 50 °C

10 Handing the product over to the operator

- When you have finished the installation, attach the sticker supplied (in the operator's language) to the product cover.
- Explain to the operator how the safety devices work and where they are located.
- Inform the operator how to handle the product.
- In particular, draw attention to the safety information which the operator must follow.
- Inform the operator of the necessity to have the product maintained on a regular basis.
- Instruct the operator about measures taken to ensure the supply of combustion air and flue gas pipe.

11 Inspection and maintenance

11.1 Observing inspection and maintenance intervals

- Adhere to the minimum inspection and maintenance intervals. Depending on the results of the inspection, it may be necessary to bring maintenance work forward.

  Inspection and maintenance work – Overview (→ Page 38)

11.2 Procuring spare parts

The original components of the product were also certified as part of the declaration of conformity. If you do not use certified Glow-worm original spare parts for maintenance or repair work, this voids the conformity of the product. We therefore strongly recommend that you install Glow-worm original spare parts. Information about available Glow-worm original spare parts is available by contacting the contact address provided on the reverse of this document.

- If you require spare parts for maintenance or repair work, use only Glow-worm original spare parts.

11.3 Checking the CO_2 content

1. Start up the product with the check programme **(P.01)** and set the value.
   – Setting value for the programme P.01: 100

   Check programmes – Overview (→ Page 29)
2. Wait until the value that is read is stable.
   – Waiting period for reading a stable value: 5 min

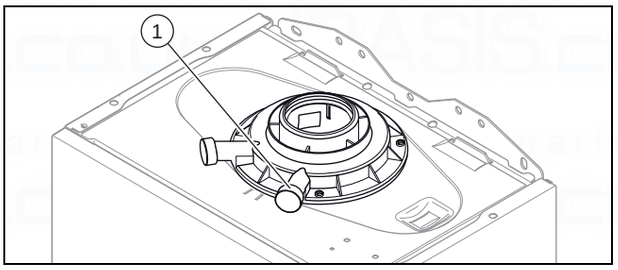

3. Unscrew the cover from the flue gas analysis point **(1)**.
4. Measure the CO_2 content at the flue gas analysis point **(1)**.
5. Compare the measured value with the corresponding value in the table.

Checking the CO_2 content

Great Britain
Removed front casing/installed front casing
Natural gas
G20
9.2 ±1 %

◁ The value is OK.

▽ The value is not OK; you cannot start up the product.

► Set the CO_2 content. (→ Page 22)

11.4 Setting the CO_2 content

Conditions: The CO_2 content must be adjusted

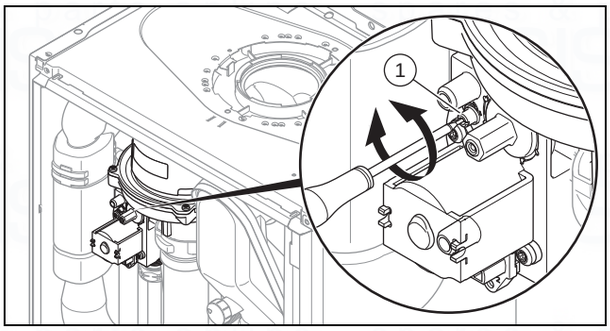

► Turn the screw **(1)** to set the CO_2 content (value with front casing removed).

◁ To increase the CO_2 content: Turn anti-clockwise

◁ To decrease the CO_2 content: Turn clockwise

► Only carry out the adjustment in increments of 1/8 turn and wait approximately 1 minute after each adjustment until the value has stabilised.

► Compare the measured value with the corresponding value in the table.

Setting the CO_2 value

	Great Britain
	Removed front casing/installed front casing
	Natural gas
	G20
CO_2 at full load	9.2 ±0.2 %
Set for Wobbe index W_o	14.09 kW·h/m³
O_2 at full load	4.5 ±1.8 vol. %
CO at full load	≤ 250 ppm
CO/CO_2	≤ 0.0027

▽ If the setting is not in the specified adjustment range, you must not start up the product.

► Inform Customer Service.

► Check whether the air-quality requirements with regard to carbon monoxide are fulfilled.

► Install the front casing.

11.5 Removing the gas-air mixture unit

Note

The gas-air mixture unit consists of three main components:

– Ventilator

– Gas valve,

– Burner cover

1. Switch off the product via the main switch.
2. Close the gas isolator cock.
3. Remove the front casing. (→ Page 10)

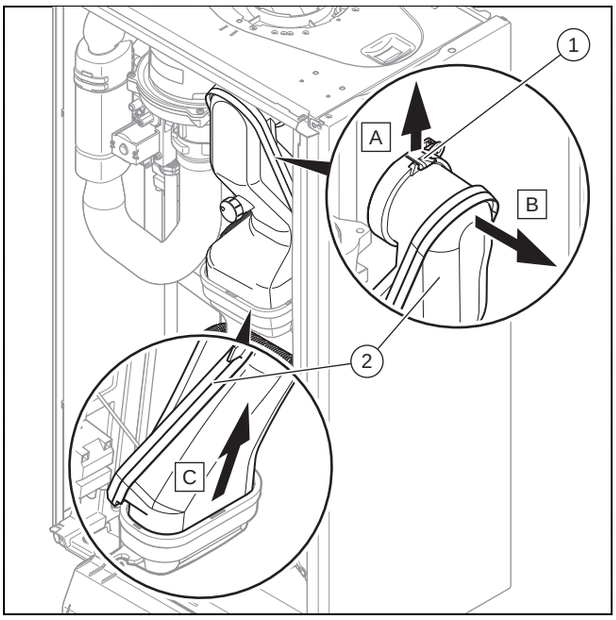

4. Push the clip **(1)** upwards.
5. Remove the flue pipe **(2)**.

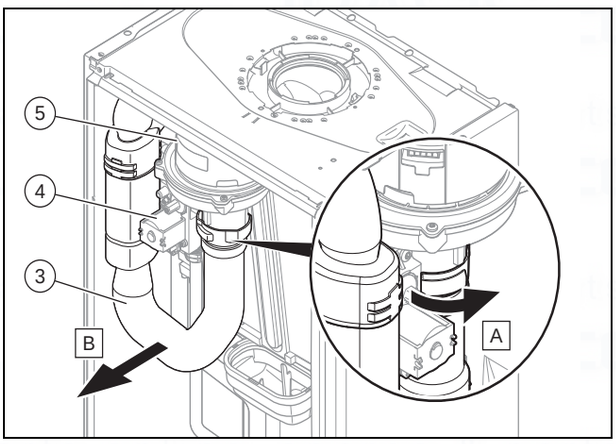

6. Remove the air intake pipe **(3)**.
7. Remove the plugs from the gas valve **(4)** and from the fan **(5)**.

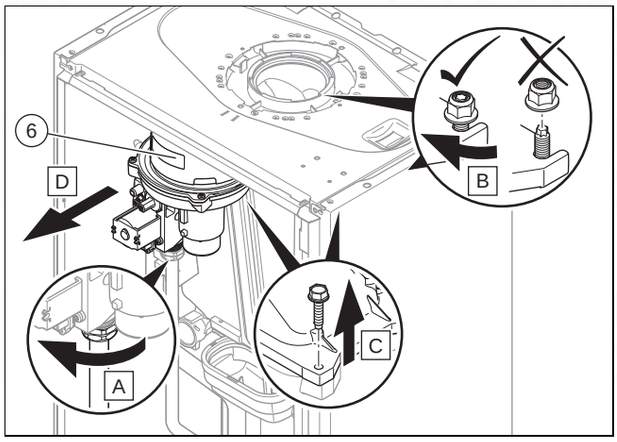

8. Remove the gas-air mixture unit **(6)**.

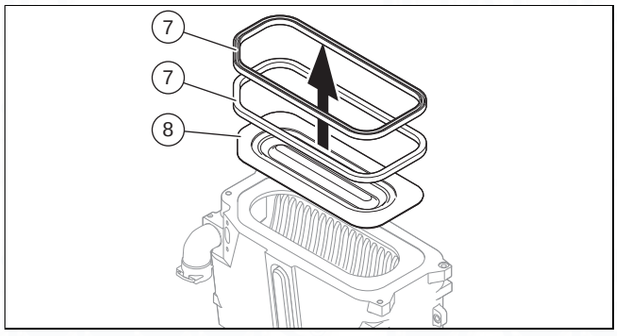

9. Remove the burner seals **(7)** and the burner **(8)**.
10. Check the burner and the heat exchanger for damage and dirt.
11. If necessary, clean or replace the components according to the following sections.
12. Install the two new burner seals.

11.6 Cleaning the heat exchanger

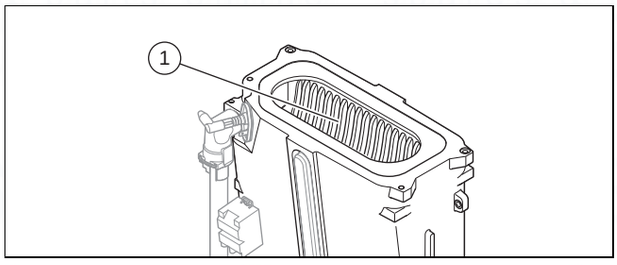

1. Protect the folded down electronics box against sprayed water.
2. Clean the ribs of the heat exchanger **(1)** with water.
   - ◁ The water runs out into the condensate tray.

11.7 Checking the burner

1. Search the surface of the burner for possible damage. If you see any damage, replace the burner.
2. Install the two new burner seals.

11.8 Checking the ignition electrode

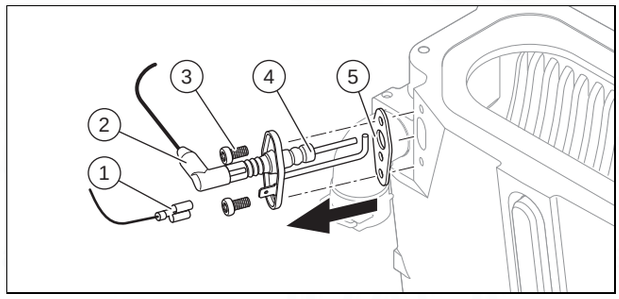

1. Disconnect the connection **(2)** and the earthing cable **(1)**.
2. Remove the fixing screws **(3)**.
3. Carefully remove the electrode from the combustion chamber.
4. Check that the electrode ends **(4)** are undamaged.
5. Check the electrode distance.
   - Clearance for the ignition electrodes: 3.5 … 4.5 mm
6. Make sure that the seal **(5)** is free from damage.
   - ▽ If necessary, replace the seal.

11.9 Cleaning the condensate tray

1. Switch off the product via the main switch.
2. Close the gas isolator cock.
3. Remove the front casing. (→ Page 10)

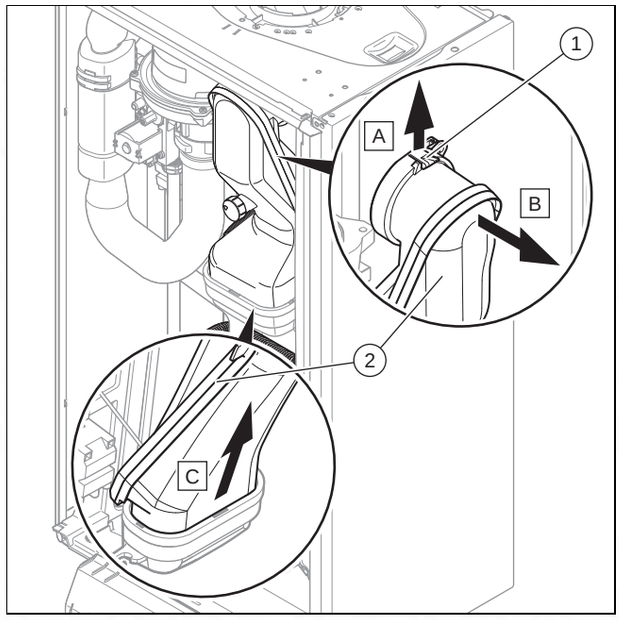

4. Push the clip **(1)** upwards.
5. Remove the flue pipe **(2)**.

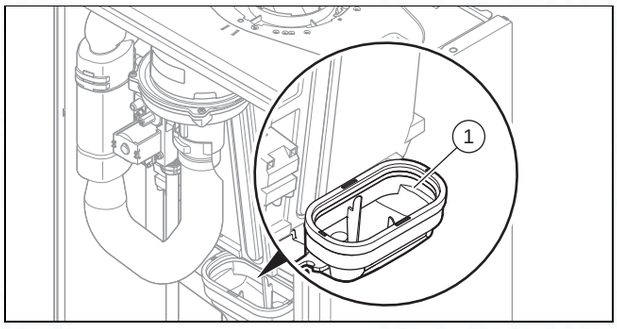

6. Using water to clean the condensate tray **(1)**.
   ◁ The water runs out into the condensate siphon.

11.10 Cleaning the condensate siphon

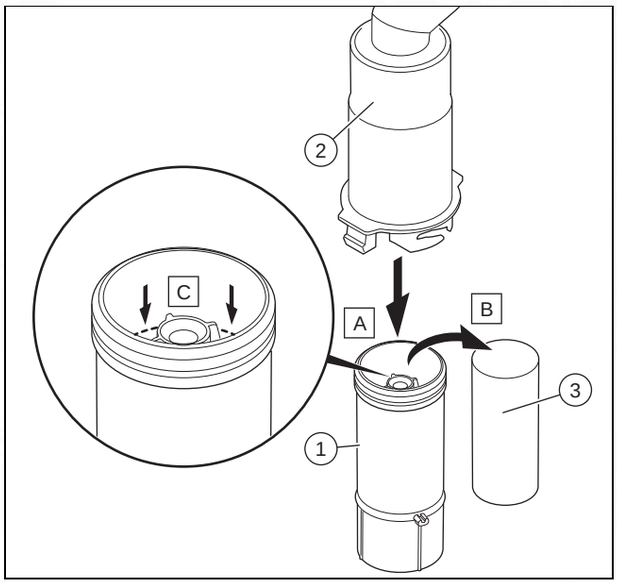

1. Unclip the lower section of the siphon **(1)** from the upper section of the siphon **(2)**.
2. Remove the float **(3)**.
3. Flush out the float and lower section of the siphon with water.
4. Fill the lower section of the siphon with water up to 10 mm below the upper edge of the condensate drain pipework.
5. Reinsert the float **(3)**.

Note
Check whether the float is present in the condensate siphon.

6. Clip the lower section of the siphon **(1)** into the upper section of the siphon **(2)**.

11.11 Cleaning the filter in the cold water inlet

1. Close the main cold water supply line.
2. Drain the product on the hot water side.
3. Remove the connection piece from the connection for the product's cold water supply.
4. Clean the filter in the cold water inlet without removing it.

11.12 Cleaning the heating filter

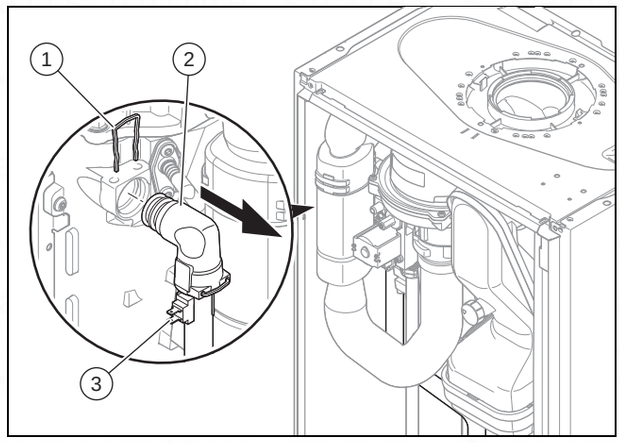

1. Drain the product. (→ Page 25)
2. Remove the temperature sensor **(3)**.
3. Remove the upper clip **(1)**.

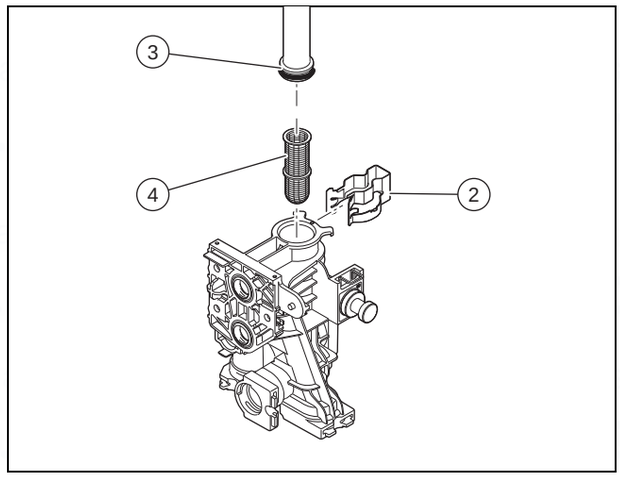

4. Remove the lower clip **(2)**.
5. Remove the supply pipe **(3)**.
6. Remove the heating filter **(4)** and clean it.
7. Reinstall the components in the reverse order.

11.13 Installing the gas-air mixture unit

1. Install the burner.
2. Install the gas-air mixture unit.
3. Install the air intake pipe.
4. Install the flue pipe.

11.14 Draining the product

1. Close the service valves of the product.
2. Start check programme P.05 (→ Page 15).
   Check programmes – Overview (→ Page 29)
3. Open the drain cock.

11.15 Checking the pre-charge pressure of the expansion vessel

1. Drain the product. (→ Page 25)
2. Measure the pre-charge pressure of the expansion vessel at the vessel valve.

Conditions: Pre-charge pressure < 0.075 MPa (0.75 bar)

- Top up the expansion vessel in accordance with the static height of the heating installation, ideally with nitrogen, otherwise with air. Check that the drain valve is open when topping up.

3. If water escapes from the valve of the expansion vessel, you must replace the expansion vessel (→ Page 27).
4. Fill and purge the heating installation. (→ Page 17)

11.16 Completing inspection and maintenance work

1. Fill and purge the heating installation. (→ Page 17)
2. Check the gas connection pressure (gas flow pressure). (→ Page 18)
3. Check the CO_2 content. (→ Page 21)

12 Troubleshooting

12.1 Rectifying faults

- If fault codes (F.**XX**) are present, refer to the table in the appendix for advice or use the check programme(s).
  Overview of fault codes (→ Page 34)
  Check programmes – Overview (→ Page 29)

If several faults occur at the same time, the fault codes are shown alternately on the display.

- Hold the ⏻ button down for more than 3 seconds.
- If you are unable to clear the fault code and it reappears despite several fault clearance attempts, contact customer service.

12.2 Calling up the fault memory

The last ten fault codes are stored in the fault memory.

- Hold the ⊖ button down for more than 7 seconds.
  Overview of fault codes (→ Page 34)
- Press the mode button to exit this menu.

12.3 Deleting the fault memory

1. Delete the fault memory using the diagnostics code **d.94**.
2. Set the diagnostics code. (→ Page 15)
   Overview of diagnostics codes (→ Page 29)

12.4 Resetting parameters to factory settings

1. Reset all parameters to the factory settings using the diagnostics code **d.96**.
2. Set the diagnostics code. (→ Page 15)
   Overview of diagnostics codes (→ Page 29)

12.5 Preparing the repair work

1. Switch off the product.
2. Disconnect the product from the power mains.
3. Remove the front casing.
4. Close the gas isolator cock.
5. Close the service valves in the heating flow and in the heating return.
6. Close the service valve in the cold water pipe.
7. Drain the product if you want to replace water-bearing components of the product.
8. Ensure that water does not drip on live components (e.g. the electronics box).
9. Use only new seals.

12.6 Replacing defective components

12.6.1 Replacing the burner

1. Remove the gas-air mixture unit. (→ Page 22)
2. Remove the burner seal.
3. Remove the burner.
4. Install the new burner complete with new seal on the heat exchanger.
5. Install the gas-air mixture unit. (→ Page 25)

12.6.2 Replacing the gas-air mixture unit

1. Remove the gas-air mixture unit. (→ Page 22)
2. Install the new gas-air mixture unit (→ Page 25).

12.6.3 Replacing the gas valve

1. Disconnect the product from the power mains.
2. Close the gas isolator cock.
3. Remove the front casing. (→ Page 10)

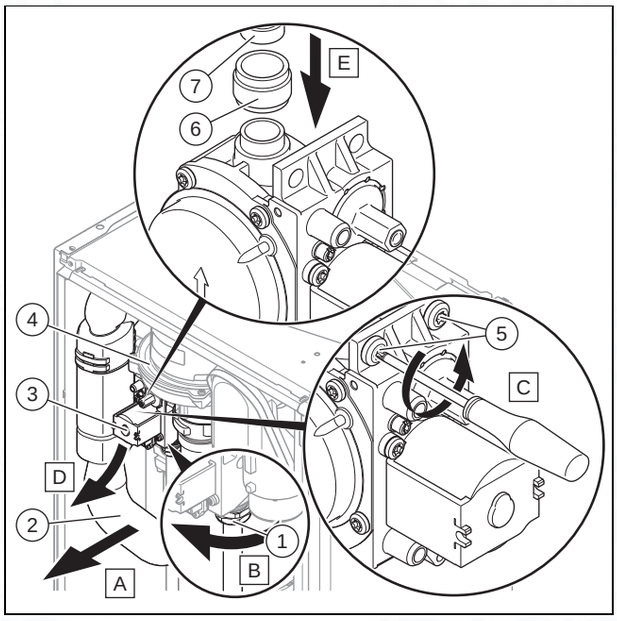

4. Remove the air intake pipe **(2)**.
5. Remove the plug from the gas valve **(3)** and from the fan **(4)**.
6. Unscrew the gas connection pipe's connection **(1)** from the gas valve.
7. Undo the two screws **(5)**.
8. Remove the gas valve **(3)**.
9. Remove the seal **(6)** if it is still in place on the fan **(7)**.
10. Install the new gas valve in reverse order.
11. Check the CO_2 content. (→ Page 21)
12. Set the CO_2 content. (→ Page 22)

12.6.4 Replacing the heat exchanger

1. Remove the front casing. (→ Page 10)
2. Remove the gas-air mixture unit. (→ Page 22)

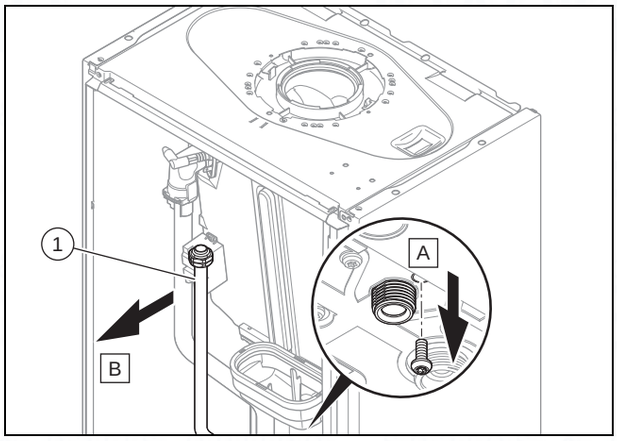

3. Remove the gas pipe **(1)**.

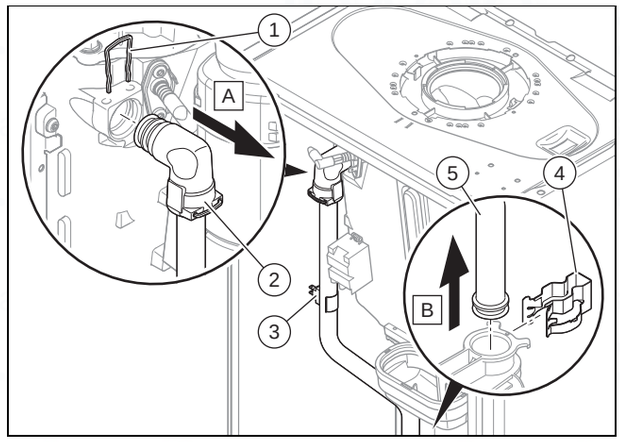

4. Remove the temperature sensor **(3)**.
5. Remove the upper clip **(1)**.
6. Remove the lower clip **(4)**.
7. Remove the supply pipe **(5)**.

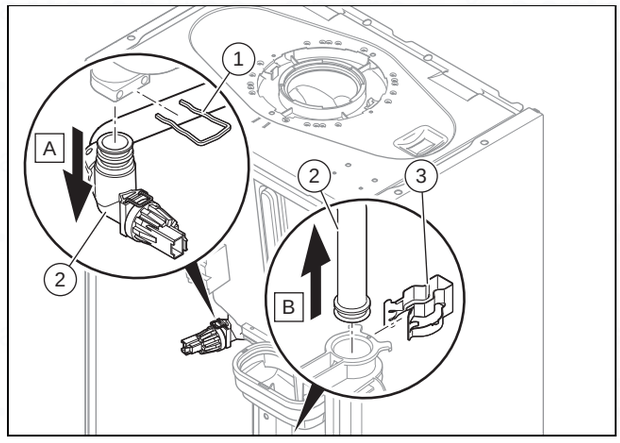

8. Remove the upper clip **(1)**.
9. Remove the lower clip **(3)**.
10. Remove the return pipe **(2)**.

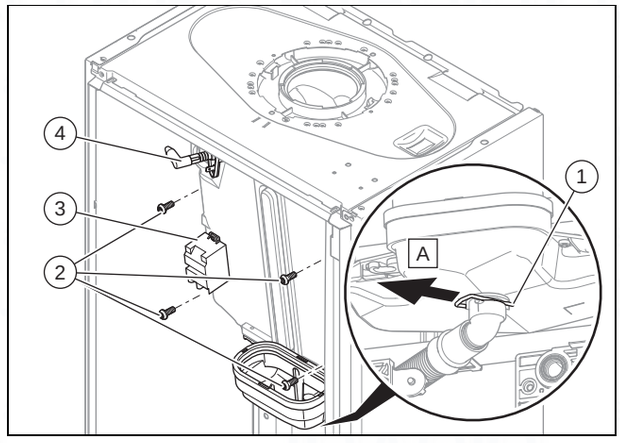

11. Remove the clip underneath the condensate tray **(1)**.
12. Undo the four screws **(2)**.

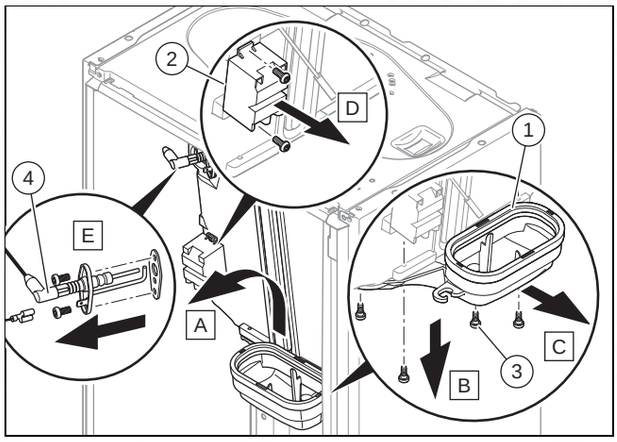

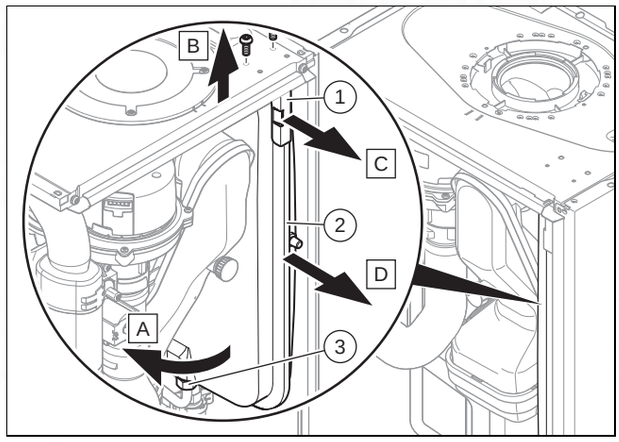

13. Lift the heat exchanger up slightly and remove it together with the condensate tray **(1)**.
14. Undo the four screws **(3)**.
15. Remove the condensate tray.
16. Remove the ignition transformer **(2)**.
17. Use the bolts to secure the condensate tray to the new heat exchanger.
18. Install the new heat exchanger in reverse order.

12.6.5 Replacing the pump head

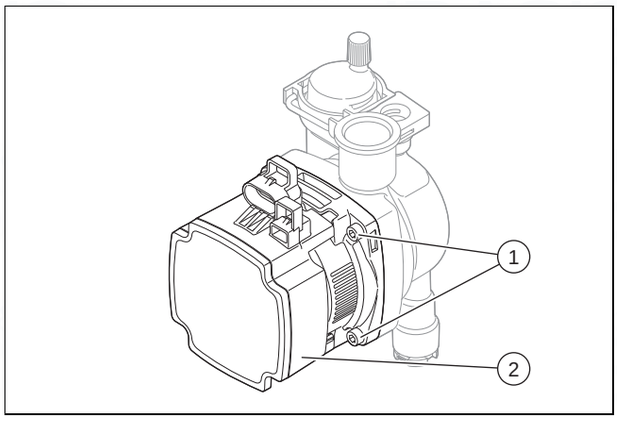

1. Disconnect the pump cable from the electronics box.
2. Undo the four bolts **(1)**.
3. Remove the pump head **(2)**.
4. Replace the O-ring.
5. Use four screws to secure the new pump head.
6. Connect the pump cable to the electronics box.

12.6.6 Replacing the expansion vessel

1. Drain the product. (→ Page 25)
2. Undo the nut **(3)**.
3. Remove both screws on the support plate **(1)**.
4. Remove the support plate.
5. Pull out the expansion vessel **(2)** towards the front.
6. Insert a new expansion vessel into the product.
7. Screw the new expansion vessel onto the water connection. To do this, use a new seal.
8. Attach the support plate using both screws.
9. Fill and purge the product and, if necessary, the heating installation.

12.6.7 Replacing the main PCB

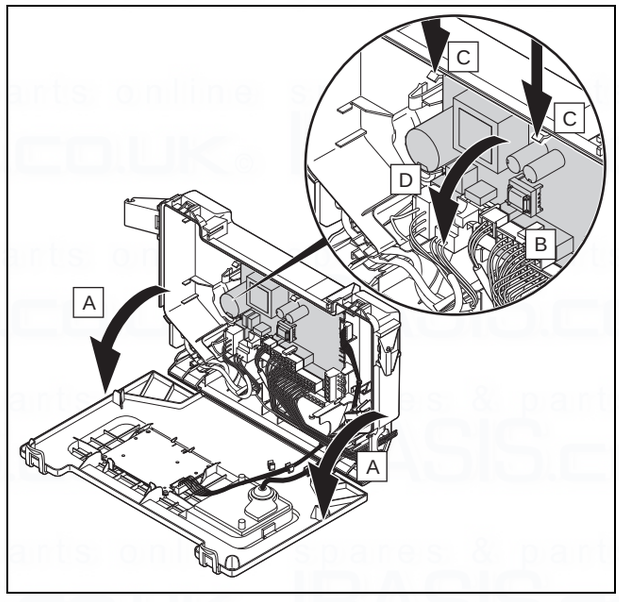

1. Open the electronics box.
2. Pull all of the plugs out from the PCB.
3. Undo the clips on the PCB.
4. Remove the PCB.
5. Install the new PCB in such a way that it clicks into the groove at the bottom and into the clip at the top.
6. Plug in the PCB plugs.
7. Close the electronics box.

12.6.8 Replacing the PCB for the user interface

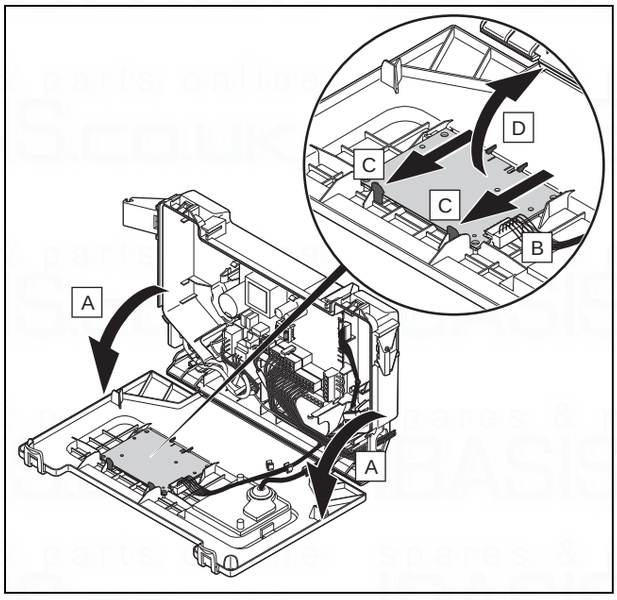

1. Open the electronics box.
2. Pull the plug out of the PCB.
3. Undo the clips on the PCB.
4. Remove the PCB.
5. Install the new PCB in such a way that it clicks into the groove at the bottom and into the clip at the top.
6. Plug in the PCB plug.
7. Close the electronics box.

12.6.9 Replacing the expansion relief valve

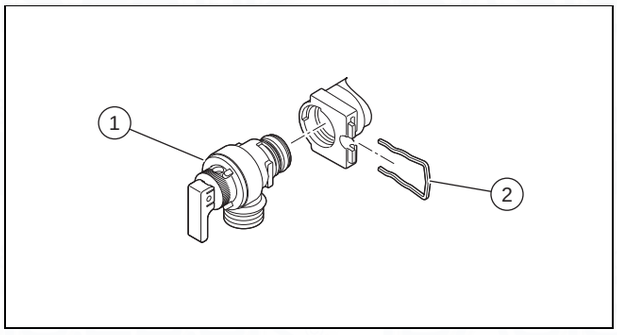

1. Remove the clip **(2)**.
2. Remove the expansion relief valve.
3. Fit the new expansion relief valve with a new O-ring.
4. Reattach the clip **(2)**.

12.6.10 Replacing the flow sensor

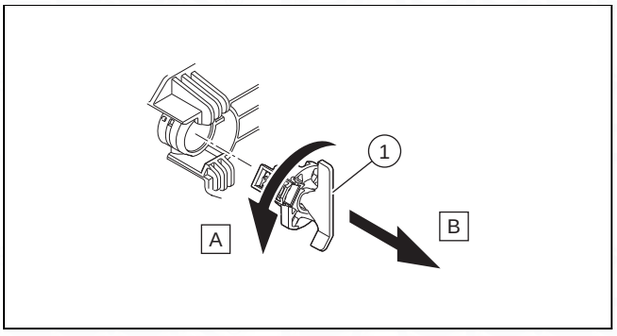

1. Pull out the plug.
2. Remove the flow sensor **(1)**.
3. Install the new flow sensor.
4. Plug in the plug.

12.6.11 Replace the pressure sensor

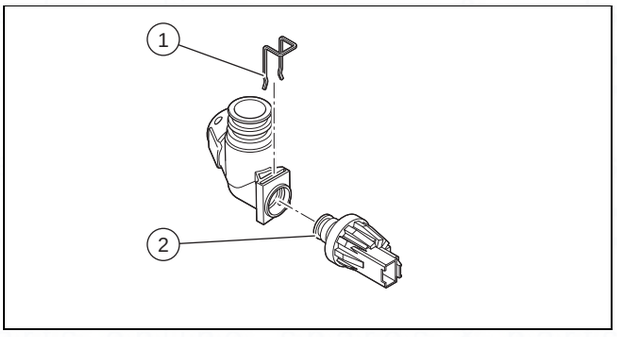

1. Pull out the plug.
2. Remove the clip **(1)**.
3. Remove the pressure sensor **(2)**.
4. Install the new pressure sensor.
5. Reattach the clip **(1)**.

12.7 Completing repair work

► Check that the product is running correctly and that it is completely leak-tight.

13 Decommissioning the product

► Decommission the product.
► Disconnect the product from the power mains.
► Close the gas isolator cock.
► Close the cold water stop cock.
► Drain the product. (→ Page 25)

14 Customer service

For contact details for our customer service department, you can write to the address that is provided on the back page, or you can visit www.glow-worm.co.uk.

Appendix

A Check programmes – Overview

Note
Since the programme table is used for various products, some programmes may not be visible for the product in question.

Display	Meaning
P.01	Burner operation on adjustable heat input: The product operates after ignition with the heat input set between "0" (0% = Pmin) and "100" (100% = Pmax). The function is active for 15 minutes.
P.02	Burner operation at ignition load: After ignition, the product works at ignition load. The function is active for 15 minutes.
P.03	The product runs in heating mode with the maximum heat input set using diagnostics code d.00.
P.04	Maximum output function: If there is a hot water request, the product runs in hot water handling mode and at maximum heat load. If there is no hot water request, the product runs with the heating partial load that is set via diagnostics code d.00 and in heating mode. The function is active for 15 minutes.
P.05	Filling the product: The diverter valve moves to the mid-position. The burner and pump switch off (to fill or drain the product). If the pressure is lower than 0.03 MPa (0.3 bar) and then is above 0.05 MPa (0.5 bar) for longer than 15 seconds, the automatic purging function is activated. The function is active for 15 minutes.
P.06	Purging the heating circuit: The diverter valve is moved to the heating position. The function is activated in the heating circuit for 15 minutes. The pump runs and stops at regular intervals. If required, this function can be manually switched off.
P.07	Purging the hot water circuit: The function is activated in the small hot water circuit for 4 minutes and then in the heating circuit for 1 minute. The pump runs and stops at regular intervals. If required, this function can be manually switched off.
Automatic air vent function	Purging the product: If the pressure is lower than 0.03 MPa (0.3 bar) and then is above 0.05 MPa (0.5 bar) for longer than 15 seconds, the automatic purging function is activated. The function is activated in the small hot water circuit for 4 minutes and then in the heating circuit for 1 minute. This function cannot be manually switched off.

B Overview of diagnostics codes

Note
Since the code table is used for various products, some codes may not be visible for the product in question.

Diagnostics code	Parameter	Values		Unit	Increment, select, explanation	Default setting	User-specific setting
		Min.	Max.				
d.00	Heating maximum output	–	–	kW	The maximum heating output varies depending on the product. → Section "Technical data" Automatic: Unit automatically adjusts the maximum output to the current system demand	→ Section "Technical data"	Adjustable
d.01	Pump overrun in heating mode	1	60	min	1	5	Adjustable

Diagnostics code	Parameter	Values		Unit	Increment, select, explanation	Default setting	User-specific setting
		Min.	Max.				
d.02	Maximum burner anti-cycling time in heating mode	2	60	min	1	20	Adjustable
d.04	Water temperature in the cylinder	Current value		°C	–	–	Not adjustable
d.05	Determined heating flow set target temperature	Current value		°C	–	–	Not adjustable
d.06	Hot water set target temperature	Current value		°C	(Combination unit only)	–	Not adjustable
d.07	Set target temperature for the domestic hot water cylinder	Current value		°C	–	–	Not adjustable
d.08	Status of the 230 V thermostat	Current value		–	0 = Room thermostat open (no heat requirement) 1 = Room thermostat closed (heat requirement)	–	Not adjustable
d.09	Heating flow set target temperature that is set on the eBUS room thermostat	Current value		°C	–	–	Not adjustable
d.10	Status of the internal pump in the heating circuit	Current value		–	off / on	–	Not adjustable
d.11	Status of the heating circuit's shunt pump	Current value		–	off / on	–	Not adjustable
d.13	Status of the hot water circuit's circulation pump	Current value		–	off / on	–	Not adjustable
d.14	Operating mode of the modulating pump	0	5	–	0 = variable rotational speed (auto) 1; 2; 3; 4; 5 = Fixed rotational speeds → Section "Setting the pump output"	0	Adjustable
d.15	Pump speed	Current value		%	–	–	Not adjustable
d.16	Status of the 24 V room thermostat	Current value		–	off = Heating off on = Heating on	–	Not adjustable
d.17	Heating control	–	–	–	off = Flow temperature on = Return temperature (adjustment for underfloor heating. If you have activated the return temperature control, the automatic heating output determination function is not active.)	0	Adjustable
d.18	Pump overrun operating mode	1	3	–	1 = Comfort (continuously operating pump) 3 = Eco (intermittent pump mode – for the dissipation of the residual heat after hot water generation at an extremely low heat demand)	1	Adjustable
d.19	Pump operating mode, 2 stage pump	0	3	–	0 = Burner mode stage 2, pump flow/overrun stage 1 1 = Heating mode and pump flow/overrun stage 1, hot water handling mode stage 2 2 = Automatic heating mode, pump flow/overrun stage 1, hot water handling mode stage 2 3 = Stage 2	3	Adjustable

Diagnostics code	Parameter	Values		Unit	Increment, select, explanation	Default setting	User-specific setting
		Min.	Max.				
d.20	Maximum hot water set target temperature	50	60	°C	1	50	Adjustable
d.21	Status of the warm start for hot water	Current value		–	off = Function deactivated on = Function activated and available	–	Not adjustable
d.22	Status of the hot water request	Current value		–	off = No current requirement on = Current requirement	–	Not adjustable
d.23	Status of the heating demand	Current value		–	off = Heating off (Summer mode) on = Heating on	–	Not adjustable
d.24	Status of the pressure monitor	0	1	–	off = Not switched on = Switched	–	Not adjustable
d.25	Status of the requirement to reheat the cylinder or for the hot water warm start from the eBUS thermostat	Current value		–	off = Function deactivated on = Function activated	–	Not adjustable
d.27	Function of relay 1 (multi-functional module)	1	10	–	1 = Circulation pump 2 = External pump 3 = Cylinder charging pump 4 = Extractor hood 5 = External solenoid valve 6 = External fault message 7 = Solar pump (omitted) 8 = eBUS remote control 9 = Legionella protection pump 10 = Solar valve	1	Adjustable
d.28	Function of relay 2 (multi-functional module)	1	10	–	1 = Circulation pump 2 = External pump 3 = Cylinder charging pump 4 = Extractor hood 5 = External solenoid valve 6 = External fault message 7 = Solar pump (omitted) 8 = eBUS remote control 9 = Legionella protection pump 10 = Solar valve	2	Adjustable
d.31	Automatic filling device	0	2	–	0 = Manual 1 = Semi-automatic 2 = Automatic	0	Adjustable
d.33	Fan speed target value	Current value		rpm	Fan speed = Display value x 100	–	Not adjustable
d.34	Value for the fan speed	Current value		rpm	Fan speed = Display value x 100	–	Not adjustable
d.35	Position of the diverter valve	Current value		–	0 = Heating 40 = Mid-position (parallel operation) 100 = Domestic hot water	–	Not adjustable
d.36	Value for the hot water flow	Current value		l/min	–	–	Not adjustable
d.39	Water temperature in the solar circuit	Current value		°C	–	–	Not adjustable
d.40	Heating flow temperature	Current value		°C	–	–	Not adjustable
d.41	Heating return temperature	Current value		°C	–	–	Not adjustable
d.43	Heating curve	0.2	4	–	0.1	1.2	Adjustable

Diagnostics code	Parameter	Values		Unit	Increment, select, explanation	Default setting	User-specific setting
		Min.	Max.				
d.45	Value for the base point of the heating curve	15	30	–	1	20	Adjustable
d.47	Outside temperature	Current value		°C	–	–	Not adjustable
d.50	Correction of the minimum fan speed	0	3000	rpm	1 Fan speed = Display value x 10	600	Adjustable
d.51	Correction of the maximum fan speed	-2500	0	rpm	1 Fan speed = Display value x 10	-1000	Adjustable
d.58	Solar circuit reheating	0	3	–	0 = Boiler's Legionella protection function deactivated 3 = Hot water activated (min. target value 60 °C)	0	Adjustable
d.60	Number of blocks by the temperature limiter	Current value		–	–	–	Not adjustable
d.61	Number of unsuccessful ignitions	Current value		–	–	–	Not adjustable
d.62	Night set-back	0	30	–	1	0	Adjustable
d.64	Average burner ignition time	Current value		s	–	–	Not adjustable
d.65	Maximum burner ignition time	Current value		s	–	–	Not adjustable
d.66	Activation of the warm start function for hot water	–	–	–	off = Function deactivated on = Function activated	1	Adjustable
d.67	Remaining burner anti-cycling time (setting under d.02)	Current value		min	–	–	Not adjustable
d.68	Number of unsuccessful ignitions at 1st attempt	Current value		–	–	–	Not adjustable
d.69	Number of unsuccessful ignitions at 2nd attempt	Current value		–	–	–	Not adjustable
d.70	Operation of the diverter valve	0	2	–	0 = Normal operating mode (DHW and heating mode) 1 = Mid-position (parallel operation) 2 = Permanent setting: Heating mode	0	Adjustable
d.71	Maximum heating flow set target temperature	45	80	°C	1	→ Section "Technical data"	Adjustable
d.73	Correction of the hot water warm start temperature	-15	5	K	1	0	Adjustable
d.75	Maximum cylinder reheating time	20	90	min	1	45	Adjustable
d.77	Max. cylinder reheating	–	–	kW	1 → Section "Technical data"	–	Adjustable
d.80	Running time in heating mode	Current value		h	Running time = Display value x 100	–	Not adjustable
d.81	Running time in hot water handling mode	Current value		h	Running time = Display value x 100	–	Not adjustable
d.82	Number of burner ignitions in heating mode	Current value		–	Number of ignitions = Display value x 100	–	Not adjustable
d.83	Number of burner ignitions in hot water handling mode	Current value		–	Number of ignitions = Display value x 100	–	Not adjustable

Diagnostics code	Parameter	Values		Unit	Increment, select, explanation	Default setting	User-specific setting
		Min.	Max.				
d.84	Maintenance in	0	3000	h	Number of hours = Display value x 10	300	Not adjustable
d.85	Increase in the min. output (heating and hot water handling mode)	–	–	kW	1 → Section "Technical data"	–	Adjustable
d.88	Flow rate limit value for ignition in hot water handling mode	0	1	–	0 = 1.7 l/min (no delay) 1 = 3.7 l/min (2 s delay)	0	Adjustable
d.90	Status of the eBUS room thermostat	Current value		–	off = Not connected on = Connected	–	Not adjustable
d.91	Status DCF77	Current value		–	–	–	Not adjustable
d.93	Setting the product code	0	99	–	1	–	Adjustable
d.94	Delete fault list	0	1	–	off = No on = Yes	–	Adjustable
d.95	Software versions	–	–	–	1 = Main PCB 2 = Interface PCB	–	Adjustable
d.96	Default setting (reset)	–	–	–	0 = No 1 = Yes	–	Adjustable
d.128	Heating minimum target value	10	75	°C	1	10	Adjustable
d.129	Minimum hot water target value	35 (combination unit) 45 (pure boiler)	60	°C	1	35 (combination unit) 45 (pure boiler)	Adjustable

C Status codes – Overview

Note
Since the code table is used for various products, some codes may not be visible for the product in question.

Status code	Meaning
	Displays in heating mode
S.0	Heating mode: No requirement
S.01	Heating mode: Advance fan operation
S.02	Heating mode: Pump pre-run
S.03	Heating mode: Burner ignition
S.04	Heating mode: Burner on
S.05	Heating mode: Pump/fan overrun
S.06	Heating mode: Fan overrun
S.07	Heating mode: Pump overrun
S.08	Heating mode: Temporary shutdown after heating procedure
	Displays in hot water handling mode
S.10	Hot water handling mode: Requirement
S.11	Hot water handling mode: Advance fan operation
S.13	Hot water handling mode: Burner ignition
S.14	DHW mode: Burner on
S.15	DHW mode: Pump/fan overrun
S.16	DHW mode: Fan overrun

Status code	Meaning
S.17	DHW mode: Pump overrun
	Display in Comfort mode with warm start or hot water handling mode with cylinder
S.20	Hot water handling mode: Requirement
S.21	Hot water handling mode: Advance fan operation
S.22	Hot water handling mode: Pump pre-run
S.23	Hot water handling mode: Burner ignition
S.24	DHW mode: Burner on
S.25	DHW mode: Pump/fan overrun
S.26	DHW mode: Fan overrun
S.27	DHW mode: Pump overrun
S.28	Hot water handling mode: Temporary shutdown of the burner
	Other displays
S.30	Room thermostat is blocking heating mode.
S.31	No heating demand: Summer mode, eBUS controller, waiting period
S.32	Fan waiting time: Fan speed outside of the tolerance values
S.33	Forced fan operation until the pressure monitor is switched
S.34	Frost protection active
S.39	Underfloor heating contact open
S.41	Water pressure too high
S.42	Flue non-return flap closed
S.46	Protection mode: Minimum load
S.53	Product in waiting period/operation block function due to low water pressure (flow/return spread too large)
S.54	Waiting period: Low water pressure in the circuit (flow/return spread too large)
S.88	Product purging active
S.91	Maintenance: Demo mode
S.96	Automatic test programme: Return temperature sensor, heating and hot water request blocked.
S.97	Automatic test programme: Water pressure sensor, heating and hot water request blocked.
S.98	Automatic test programme: Return temperature sensor, heating and hot water request blocked.
S.99	Automatic filling active
S.108	Purging the combustion chamber, fan in operation
S.109	Product's standby mode activated

D Overview of fault codes

Note
Since the code table is used for various products, some codes may not be visible for the product in question.

Fault code	Meaning	Possible cause
F.00	Fault: Flow temperature sensor	NTC plug not plugged in or has come loose, multiple plug on the PCB not plugged in correctly, interruption in cable harness, NTC sensor defective
F.01	Fault: Return temperature sensor	NTC plug not plugged in or has come loose, multiple plug on the PCB not plugged in correctly, interruption in cable harness, NTC sensor defective
F.10	Short circuit: Flow temperature sensor	NTC sensor defective, short circuit in the cable harness, cable/casing
F.11	Short circuit: Return temperature sensor	NTC sensor defective, short circuit in the cable harness, cable/casing
F.13	Short circuit: Domestic hot water cylinder temperature sensor	NTC sensor defective, short circuit in the cable harness, cable/casing
F.20	Safety switch-off: Overheating temperature reached	Incorrect earth connection between cable harness and product, flow or return NTC defective (loose connection), black discharge via ignition cable, ignition plug or ignition electrode

Fault code	Meaning	Possible cause
F.22	Safety switch-off: Low water pressure in the boiler	No or insufficient water in the product, water pressure sensor defective, cable to the pump or to the water pressure sensor loose/not connected/defective
F.23	Safety switch-off: Temperature difference too great (NTC1/NTC2)	Pump blocked, insufficient pump output, air in product, flow and return NTC sensors connected the wrong way round
F.24	Safety switch-off: Temperature rise too fast	Pump blocked, reduced pump output, air in product, system pressure too low, return flow prevention blocked/incorrectly installed
F.25	Safety switch-off: Flue gas temperature too high	Break in connection for optional flue gas safety temperature limiter (safety cut-out), break in cable harness
F.27	Safety switch-off: Fault in flame detection	Moisture on the electronics, electronics (flame monitor) defective, gas solenoid valve leaking
F.28	Fault: Ignition unsuccessful when starting up	Gas meter defective or gas pressure monitor has triggered, air in gas, gas flow pressure too low, thermal isolator device (TAE) has triggered, incorrect gas restrictor, incorrect spare gas valve, fault on the gas valve, multiple plug on PCB incorrectly plugged in, break in cable harness, ignition system (ignition transformer, ignition cable, ignition plug, ignition electrode) defective, ionisation current interrupted (cable, electrode), incorrect earthing of product, electronics defective
F.29	Fault: Flame loss	Gas supply temporarily stopped, flue gas recirculation, incorrect earthing of product, ignition transformer has spark failure
F.32	Fan frost protection function active: Fan speed outside the tolerance values	Plug on fan not correctly plugged in, multiple plug on PCB not correctly plugged in, break in cable harness, fan blocked, Hall sensor defective, electronics defective
F.33	Fan frost protection function active: Air pressure switch fault	Pressure monitor has not switched or has switched at a fan speed value that is too high (insufficient air supply) Pressure monitor plug not correctly plugged in, pressure monitor defective, line removed from between the pressure monitor and silencer, air/flue pipe blocked and silencer not installed properly
F.49	eBUS fault: Voltage too low	Short circuit on eBUS, eBUS overload or two power supplies with different polarities on the eBUS
F.61	Fault: Gas valve control system	Short circuit/short to earth in cable harness for the gas valve, gas valve defective (coils shorted to earth), electronics defective
F.62	Fault: Gas valve switch-off control	Delayed switch-off of gas valve, delayed extinguishing of flame signal, gas valve leaking, electronics defective
F.63	Fault: EEPROM	Electronics defective
F.64	Fault: Electronics/sensor/analogue-to-digital converter	Flow or return NTC short circuited, electronics defective
F.65	Fault: Electronics temperature too high	Electronics overheating due to external influences, electronics defective
F.67	Value sent back by ASIC is incorrect (flame signal)	Implausible flame signal, electronics defective
F.68	Fault: Unstable flame (analogue input)	Air in gas, gas flow pressure too low, incorrect air ratio, incorrect gas restrictor, ionisation flow interruption (cable, electrode)
F.70	Invalid product code (DSN)	Replace the screen and PCB at the same time without reconfiguring the product's Device Specific Number
F.71	Fault: Flow/return temperature sensor	Flow temperature sensor specifies a constant value: Flow temperature sensor incorrectly attached to the flow pipe, flow temperature sensor defective
F.72	Fault: Deviation in the water pressure sensor/return temperature sensor	Flow/return NTC sensor temperature difference too great → flow and/or return temperature sensor defective
F.73	Fault: Water pressure sensor not connected or has short-circuited	Interruption/short circuit of water pressure sensor, interruption/short to earth in supply line to water pressure sensor or water pressure sensor defective
F.74	Fault: Electrical problem in the water pressure sensor	Line to water pressure sensor has a short circuit to 5 V/24 V or internal fault in the water pressure sensor
F.75	Fault: Pressure sensor	Pressure sensor or pump defective or low water pressure
F.77	Fault: Condensate or smoke	No response, flue non-return flap defective
F.78	Interruption to DHW outlet sensor at external controller	Link box connected, but hot water NTC not bridged

Fault code	Meaning	Possible cause
F.83	Fault: Burner temperature sensor	Burner temperature sensor is defective When the burner starts, the temperature change recorded by the flow or return temperature sensor is non-existent or too small: Insufficient water in the product, flow or return temperature sensor incorrectly attached to the pipe
F.84	Fault: Flow/return temperature sensor	Values not consistent, difference < -6 K Flow and return temperature sensors signalling implausible values: Flow and return temperature sensors have been inverted, flow and return temperature sensors have not been correctly installed
F.85	Fault: Temperature sensor	The flow and/or return temperature sensors have been installed on the same pipe/incorrect pipe Temperature sensor not connected or is connected incorrectly
F.86	Fault: Underfloor heating contact	Underfloor heating contact open, sensor disconnected or defective
F.87	Fault: Ignition electrode	Ignition electrode not connected or not connected properly, short circuit in the cable harness
F.88	Fault: Gas valve	Gas valve not connected or it is connected incorrectly, short circuit in the cable harness
F.89	Fault: Pump	Pump not connected or it is connected incorrectly, incorrect pump connected, short circuit in the cable harness

E Connection diagram: Combination unit

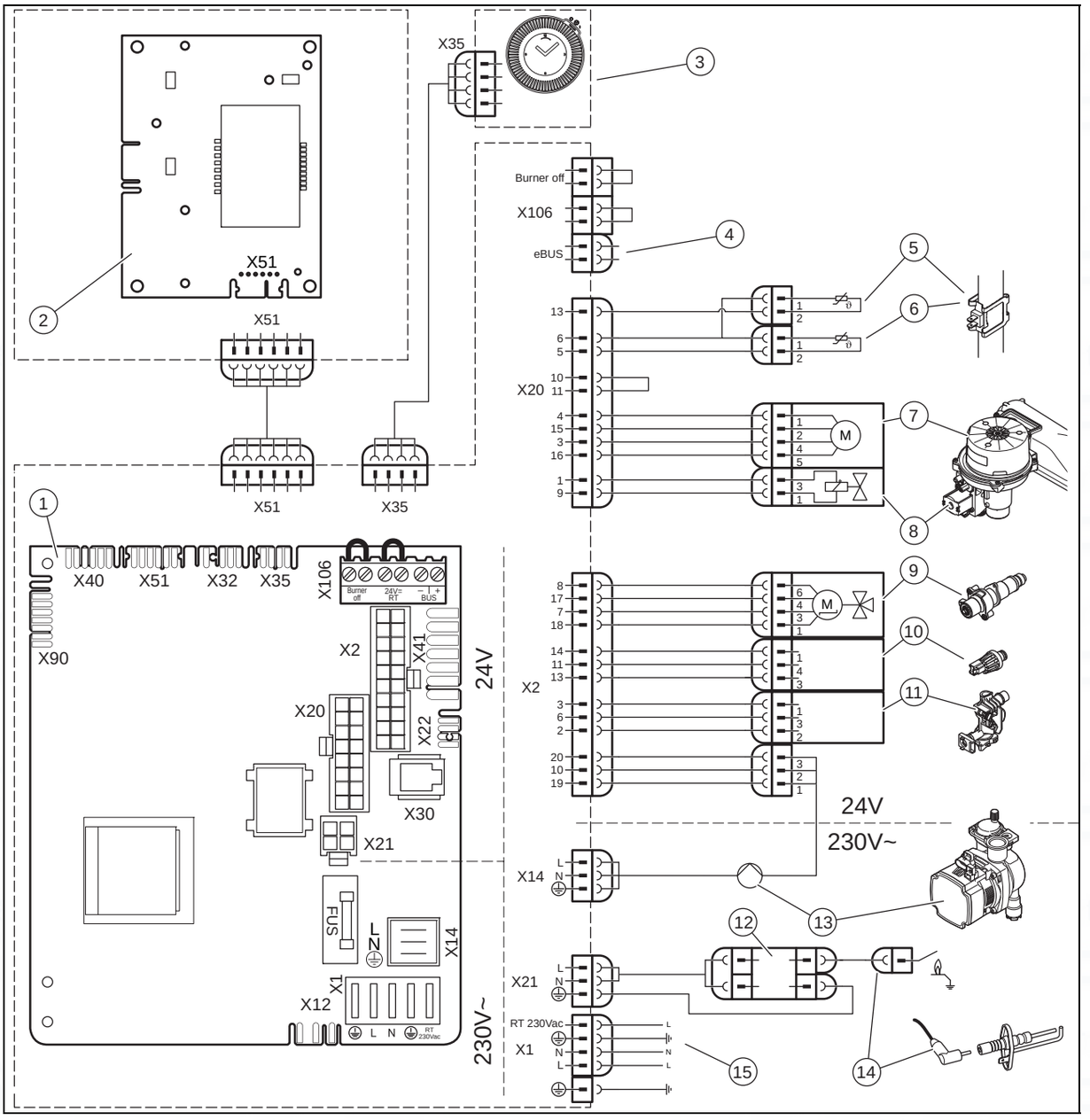

1	Main PCB	9	3-way valve
2	Interface PCB	10	Pressure sensor
3	Timer	11	Volume flow sensor
4	Control system	12	Ionisation electrode
5	Temperature sensor in the heating flow	13	Heating pump
6	Temperature sensor in the heating return	14	Ignition electrode
7	Fan	15	Main power supply
8	Gas valve		

F Inspection and maintenance work – Overview

The table below lists the manufacturer requirements with respect to minimum inspection and maintenance intervals. If national regulations and directives require shorter inspection and maintenance intervals, you should observe these instead of the intervals listed in the table.

No.	Work	Inspection (annual)	Maintenance (at least every five years)
1	Check the air/flue pipe for leak-tightness and to ensure that it is fastened correctly. Make sure that it is not blocked or damaged and has been installed in accordance with the relevant Installation Manual.	X	X
2	Check the general condition of the product. Remove dirt from the product and from the combustion chamber.	X	X
3	Visually inspect the general condition of the heat exchanger. In doing so, pay particular attention to signs of corrosion, rust and other defects. If you notice any damage, carry out maintenance work.	X	X
4	Check the gas connection pressure at maximum heat input. If the gas connection pressure is not within the specified range, carry out maintenance work.	X	X
5	Check the CO_2 content (air ratio) of the product and, if necessary, adjust it.	X	X
6	Disconnect the product from the power mains. Check that the plug connections and electrical connections are correct and make any necessary adjustments.	X	X
7	Close the gas isolator cock and the service valves.		X
8	Drain the product on the water side. Check the pre-charge pressure of the expansion vessel, and top up the vessel if necessary (approx. 0.03 MPa/0.3 bar under the system filling pressure).		X
9	Check the ignition electrode.	X	X
10	Remove the gas-air mixture unit.		X
11	Replace both burner seals **each time** it is opened and accordingly **each time** maintenance work is carried out.		X
12	Clean the heat exchanger. → Section "Cleaning the heat exchanger"		X
13	Check that the burner is not damaged and, if required, replace it.		X
14	Check the condensate siphon in the product, clean it and, if required, replace it. → Section "Cleaning the condensate siphon"	X	X
15	Install the gas-air mixture unit. **Caution: Replace the seals.**		X
16	If necessary, if the hot water output is insufficient or the outlet temperature is not reached, replace the plate heat exchanger.		X
17	Clean the filter in the cold water inlet. Replace the filter if impurities can no longer be removed or if the filter is damaged. If this is the case, also check that the impeller sensor is not dirty or damaged. Clean the sensor (do not use compressed air) and, if it is damaged, replace it.		X
18	Open the gas isolator cock, reconnect the product to the power mains and switch the product on.	X	X
19	If the automatic purging programme does not start, open the service valves, fill the product or the heating installation to 0.1-0.2 MPa/1.0-2.0 bar (depending on the static height of the heating installation) and manually start the purging programme **P.07**.		X
20	Perform a test operation of the product and heating installation, including hot water generation (if available), and purge the system once more if necessary.	X	X
21	Check the CO_2 content (the air ratio) of the product again.		X
22	Ensure that no gas, flue gas, water or condensate is leaking from the product. If required, intercept the leakage.	X	X
23	Record the inspection/maintenance work carried out.	X	X

G Opening in the air/flue pipe

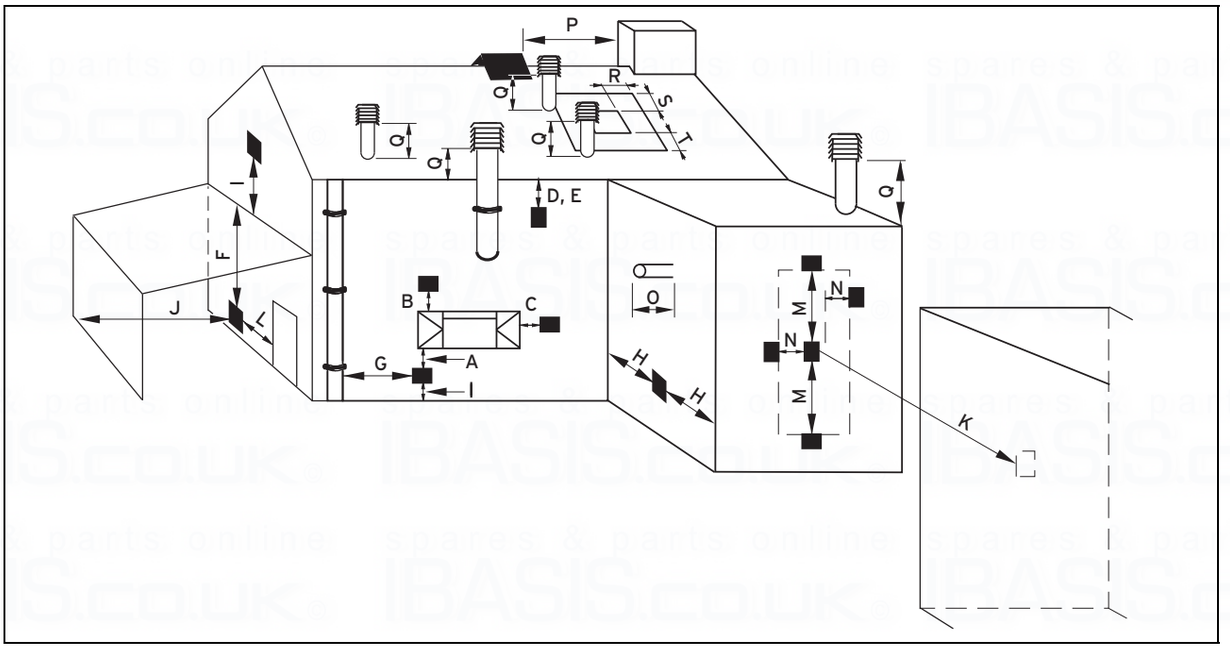

G.1 Positioning of the opening of a fan-supported flue gas pipe

	Installation site	Minimum dimensions
A	Directly below an opening, air bricks, opening windows, etc., that can be opened.	300 mm
B	Above an opening, air bricks, opening windows, etc., that can be opened.	300 mm
C	Horizontally to an opening, air bricks, opening windows, etc., that can be opened.	300 mm
D	Below temperature-sensitive building components, e.g. plastic gutters, down pipes or wastewater pipes	75 mm
E	Below eaves	200 mm
F	Below balconies or car port roofs	200 mm
G	From vertical wastewater pipes or down pipes	150 mm
H	From external or internal corners	200 mm
I	Above floors, roofs or balconies	300 mm
J	From a surface facing a terminal	600 mm
K	From a terminal facing a terminal	1,200 mm
L	From an opening in the car port (e.g. door, window) which leads into the dwelling	1,200 mm
M	Vertical from a terminal on the same wall	1,500 mm
N	Horizontal from a terminal on the same wall	300 mm
O	From the wall on which the terminal has been installed	0 mm
P	From a vertical structure on the roof	N/A
Q	Above the roof area	300 mm
R	Horizontal from adjacent windows on pitched or flat roofs	600 mm
S	Above adjacent windows on pitched or flat roofs	600 mm
T	Below adjacent windows on pitched or flat roofs	2,000 mm

G.2 Text from BS 5440-1 on fan-supported flue gas pipes

BS 5440–1: It is recommended that the fanned flue gas system terminal is positioned as follows:

- At least 2 m from an opening in the building directly opposite, and
- So that the combustion products are not discharged directly across a property boundary.
- Dimensions D, E, F and G: These clearances may be reduced to 25 mm without affecting the performance of the boiler. In order to ensure that the condensate vapour plume does not damage adjacent surfaces, the terminal should be extended as shown.
- Dimension H: This clearance may be reduced to 25 mm without adversely affecting the performance of the boiler. However, in order to ensure that the condensate vapour plume does not damage adjacent surfaces, a clearance of 300 mm is preferred. For IE, recommendations are given in the current issue of the IS 813.

G.3 Opening of the flue pipe below eaves and balconies

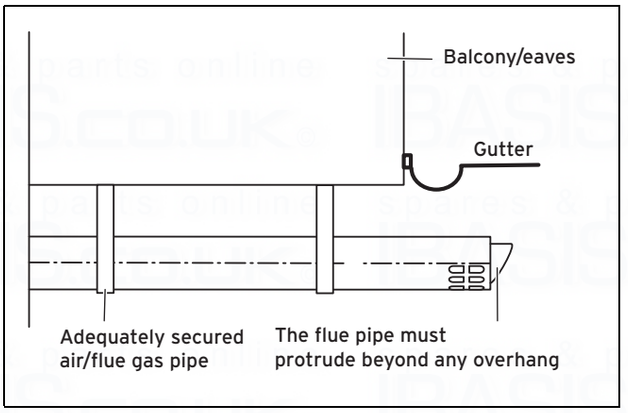

H Commissioning Checklist

Benchmark Commissioning and Servicing Section

It is a requirement that the boiler is installed and commissioned to the manufacturers instructions and the data fields on the commissioning checklist completed in full.

To instigate the boiler guarantee the boiler needs to be registered with the manufacturer within one month of the installation.

To maintain the boiler guarantee it is essential that the boiler is serviced annually by a Gas Safe registered engineer who has been trained on the boiler installed. The service details should be recorded on the Benchmark Service Interval Record and left with the householder.

benchmark
COLLECTIVE MARK
THE MARK OF QUALITY FOR THE INSTALLATION, COMMISSIONING AND SERVICING OF DOMESTIC HEATING AND HOT WATER SYSTEMS

www.centralheating.co.uk

© Heating and Hotwater Industry Council (HHIC)

GAS BOILER SYSTEM COMMISSIONING CHECKLIST

This Commissioning Checklist is to be completed in full by the competent person who commissioned the boiler as a means of demonstrating compliance with the appropriate Building Regulations and then handed to the customer to keep for future reference.

Failure to install and commission according to the manufacturer's instructions and complete this Benchmark Commissioning Checklist will invalidate the warranty. This does not affect the customer's statutory rights.

Customer name:	Telephone number:
Address:	
Boiler make and model:	
Boiler serial number:	
Commissioned by (PRINT NAME):	Gas Safe register number:
Company name:	Telephone number:
Company address:	
	Commissioning date:
To be completed by the customer on receipt of a Building Regulations Compliance Certificate*	
Building Regulations Notification Number (if applicable):	

CONTROLS (tick the appropriate boxes)				
Time and temperature control to heating	Room thermostat and programmer/timer		Programmable room thermostat	
	Load/weather compensation		Optimum start control	
Time and temperature control to hot water	Cylinder thermostat and programmer/timer		Combination Boiler	
Heating zone valves	Fitted		Not required	
Hot water zone valves	Fitted		Not required	
Thermostatic radiator valves	Fitted		Not required	
Automatic bypass to system	Fitted		Not required	
Boiler interlock			Provided	

ALL SYSTEMS				
The system has been flushed and cleaned in accordance with BS7593 and boiler manufacturer's instructions			Yes	
What system cleaner was used?				
What inhibitor was used?		Quantity	litres	
Has a primary water system filter been installed?	Yes		No	

CENTRAL HEATING MODE measure and record:			
Gas rate	m³/hr	**OR**	ft³/hr
Burner operating pressure (if applicable)	mbar	**OR** Gas inlet pressure	mbar
Central heating flow temperature			°C
Central heating return temperature			°C

COMBINATION BOILERS ONLY				
Is the installation in a hard water area (above 200ppm)?	Yes		No	
If yes, and if required by the manufacturer, has a water scale reducer been fitted?	Yes		No	
What type of scale reducer has been fitted?				
DOMESTIC HOT WATER MODE Measure and Record:				
Gas rate	m³/hr	**OR**	ft³/hr	
Burner operating pressure (at maximum rate)	mbar	**OR** Gas inlet pressure at maximum rate	mbar	
Cold water inlet temperature			°C	
Hot water has been checked at all outlets	Yes		Temperature	°C
Water flow rate			l/min	

CONDENSING BOILERS ONLY		
The condensate drain has been installed in accordance with the manufacturer's instructions and/or BS5546/BS6798	Yes	

ALL INSTALLATIONS							
Record the following:	At max. rate:	CO	ppm	**AND**	CO/CO_2	Ratio	
	At min. rate: (where possible)	CO	ppm	**AND**	CO/CO_2	Ratio	
The heating and hot water system complies with the appropriate Building Regulations						Yes	
The boiler and associated products have been installed and commissioned in accordance with the manufacturer's instructions						Yes	
The operation of the boiler and system controls have been demonstrated to and understood by the customer						Yes	
The manufacturer's literature, including Benchmark Checklist and Service Record, has been explained and left with the customer						Yes	

Commissioning Engineer's Signature
Customer's Signature
(To confirm satisfactory demonstration and receipt of manufacturer's literature)

*All installations in England and Wales must be notified to Local Authority Building Control (LABC) either directly or through a Competent Persons Scheme. A Building Regulations Compliance Certificate will then be issued to the customer.

benchmark COLLECTIVE MARK
THE MARK OF QUALITY FOR THE INSTALLATION, COMMISSIONING AND SERVICING OF DOMESTIC HEATING AND HOT WATER SYSTEMS

© Heating and Hotwater Industry Council (HHIC)

www.centralheating.co.uk

SERVICE RECORD

It is recommended that your heating system is serviced regularly and that the appropriate Service Interval Record is completed.

Service Provider

Before completing the appropriate Service Record below, please ensure you have carried out the service as described in the manufacturer's instructions. Always use the manufacturer's specified spare part when replacing controls.

SERVICE 01					Date:
Engineer name:					
Company name:					
Telephone No:					
Gas safe register No:					
Record:	At max. rate:	CO	ppm	**AND**	CO_2 %
	At min. rate: (Where Possible)	CO	ppm	**AND**	CO_2 %
Comments:					
Signature					

SERVICE 02					Date:
Engineer name:					
Company name:					
Telephone No:					
Gas safe register No:					
Record:	At max. rate:	CO	ppm	**AND**	CO_2 %
	At min. rate: (Where Possible)	CO	ppm	**AND**	CO_2 %
Comments:					
Signature					

SERVICE 03					Date:
Engineer name:					
Company name:					
Telephone No:					
Gas safe register No:					
Record:	At max. rate:	CO	ppm	**AND**	CO_2 %
	At min. rate: (Where Possible)	CO	ppm	**AND**	CO_2 %
Comments:					
Signature					

SERVICE 04					Date:
Engineer name:					
Company name:					
Telephone No:					
Gas safe register No:					
Record:	At max. rate:	CO	ppm	**AND**	CO_2 %
	At min. rate: (Where Possible)	CO	ppm	**AND**	CO_2 %
Comments:					
Signature					

SERVICE 05					Date:
Engineer name:					
Company name:					
Telephone No:					
Gas safe register No:					
Record:	At max. rate:	CO	ppm	**AND**	CO_2 %
	At min. rate: (Where Possible)	CO	ppm	**AND**	CO_2 %
Comments:					
Signature					

SERVICE 06					Date:
Engineer name:					
Company name:					
Telephone No:					
Gas safe register No:					
Record:	At max. rate:	CO	ppm	**AND**	CO_2 %
	At min. rate: (Where Possible)	CO	ppm	**AND**	CO_2 %
Comments:					
Signature					

SERVICE 07					Date:
Engineer name:					
Company name:					
Telephone No:					
Gas safe register No:					
Record:	At max. rate:	CO	ppm	**AND**	CO_2 %
	At min. rate: (Where Possible)	CO	ppm	**AND**	CO_2 %
Comments:					
Signature					

SERVICE 08					Date:
Engineer name:					
Company name:					
Telephone No:					
Gas safe register No:					
Record:	At max. rate:	CO	ppm	**AND**	CO_2 %
	At min. rate: (Where Possible)	CO	ppm	**AND**	CO_2 %
Comments:					
Signature					

SERVICE 09					Date:
Engineer name:					
Company name:					
Telephone No:					
Gas safe register No:					
Record:	At max. rate:	CO	ppm	**AND**	CO_2 %
	At min. rate: (Where Possible)	CO	ppm	**AND**	CO_2 %
Comments:					
Signature					

SERVICE 10					Date:
Engineer name:					
Company name:					
Telephone No:					
Gas safe register No:					
Record:	At max. rate:	CO	ppm	**AND**	CO_2 %
	At min. rate: (Where Possible)	CO	ppm	**AND**	CO_2 %
Comments:					
Signature					

*All installations in England and Wales must be notified to Local Authority Building Control (LABC) either directly or through a Competent Persons Scheme. A Building Regulations Compliance Certificate will then be issued to the customer.

benchmark COLLECTIVE MARK
THE MARK OF QUALITY FOR THE INSTALLATION, COMMISSIONING AND SERVICING OF DOMESTIC HEATING AND HOT WATER SYSTEMS

© Heating and Hotwater Industry Council (HHIC)

www.centralheating.co.uk

I Combustion chart

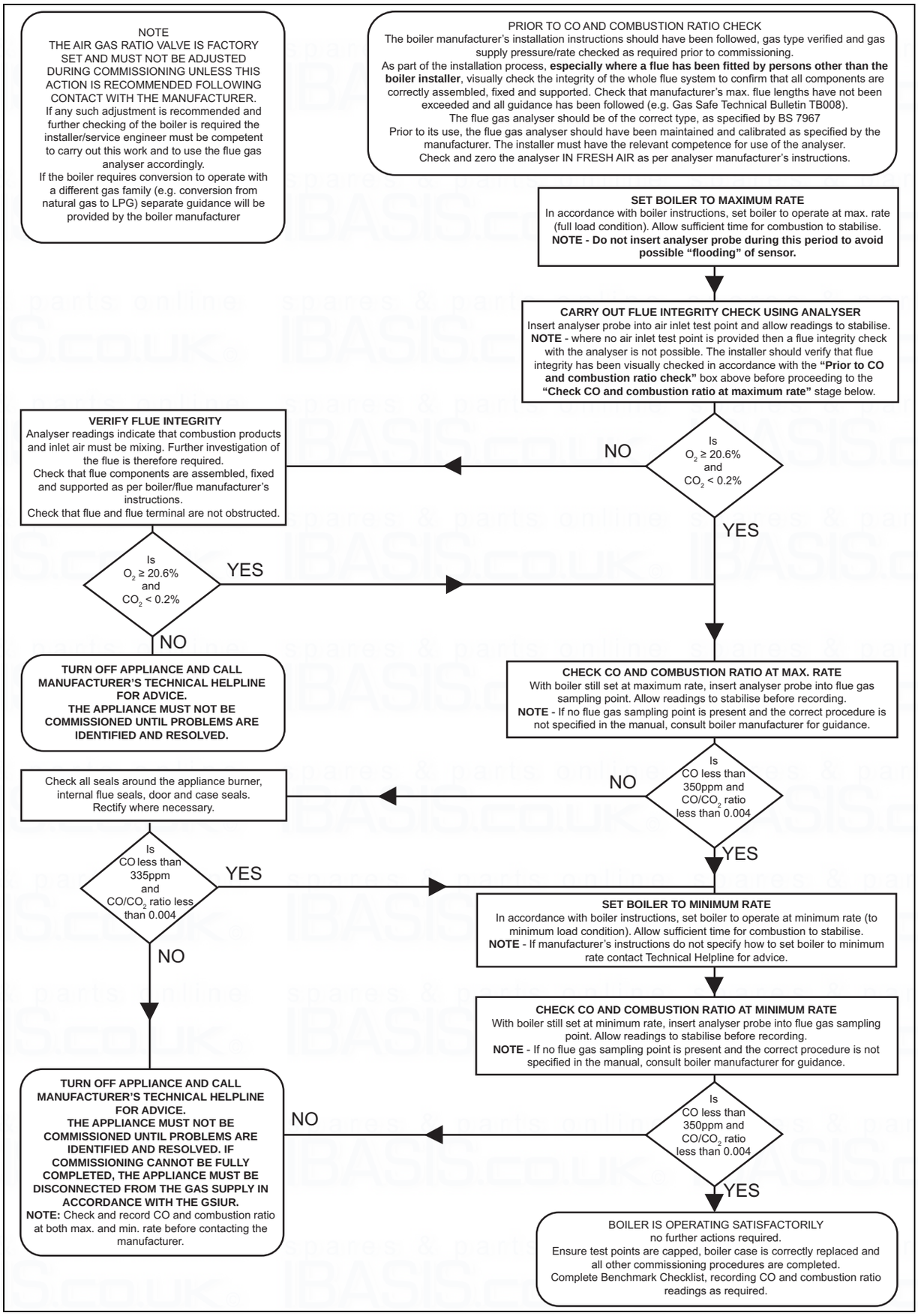

J Lengths of the air/flue pipe

Length of the C13 type flue pipe

	C13 type flue pipe	
	Dia. 60/100 (L)	Dia. 80/125 (L)
EASICOM 2 24c	≤ 9 m	≤ 22 m
EASICOM 2 28c	≤ 9 m	≤ 22 m

Length of the C33 type flue pipe

	C33 type flue pipe	
	Dia. 60/100 (L)	Dia. 80/125 (L)
EASICOM 2 24c	≤ 10 m	≤ 25 m
EASICOM 2 28c	≤ 10 m	≤ 25 m

K Technical data

Technical data – Heating

	EASICOM 2 24c	EASICOM 2 28c
Maximum heating flow temperature (default setting)	75 °C	75 °C
Max. range of the flow temperature regulation	10 … 80 °C	10 … 80 °C
Maximum permissible pressure	0.3 MPa (3.0 bar)	0.3 MPa (3.0 bar)
Nominal water flow (ΔT = 20 K)	874 l/h	1,059 l/h
Nominal water flow (ΔT = 30 K)	583 l/h	706 l/h
Approximate value for the condensate volume (pH value between 3.5 and 4.0) at 50/30 °C	2.04 l/h	2.47 l/h
ΔP heating at nominal flow (ΔT = 20 K) – (bypass default setting)	0.025 MPa (0.250 bar)	0.025 MPa (0.250 bar)
ΔP heating at nominal flow (ΔT = 20 K) – (bypass closed)	0.042 MPa (0.420 bar)	0.025 MPa (0.250 bar)

Technical data – G20 power/loading G20

	EASICOM 2 24c	EASICOM 2 28c
Maximum heat output (default setting – d.00)	20 kW	24 kW
Effective output range (P) at 50/30 °C	5.3 … 21.2 kW	6.3 … 25.7 kW
Effective output range (P) at 80/60 °C	5.1 … 20.3 kW	6.1 … 24.6 kW
Hot water heat output range (P)	5 … 24.2 kW	6 … 28 kW
Maximum heat input – heating (Q max.)	20.4 kW	24.7 kW
Minimum heat input – heating (Q min.)	5.1 kW	6.1 kW
Maximum heat input – hot water (Q max.)	24.7 kW	28.6 kW
Minimum heat input – hot water (Q min.)	5.1 kW	6.1 kW

Technical data – Domestic hot water

	EASICOM 2 24c	EASICOM 2 28c
Specific flow rate (D) (ΔT = 30 K) in accordance with EN 13203	11.7 l/min	13.6 l/min
Continuous flow rate (ΔT = 35 K)	602 l/h	699 l/h
Specific flow rate (ΔT = 35 K)	10.0 l/min	11.7 l/min
Minimum permissible pressure	0.03 MPa (0.30 bar)	0.03 MPa (0.30 bar)
Maximum permissible pressure	1 MPa (10 bar)	1 MPa (10 bar)
Temperature range	35 … 60 °C	35 … 60 °C
Throughflow volume limiter	8 l/min	10 l/min

Technical data – General

	EASICOM 2 24c	EASICOM 2 28c
Gas category	I2H	I2H
Diameter of the gas pipe	1/2 inch	1/2 inch
Diameter of the heating pipe	3/4 inch	3/4 inch
Expansion relief valve connector (min.)	15 mm	15 mm
Condensed water discharge pipe (min.)	21.5 mm	21.5 mm
G20 gas supply pressure	20 mbar	20 mbar
Gas flow at P max. – hot water (G20)	2.6 m³/h	3.0 m³/h
CE number (PIN)	CE-0063CP3646	CE-0063CP3646
Smoke mass flow in heating mode at P min.	2.34 g/s	2.80 g/s
Smoke mass flow in heating mode at P max.	9.2 g/s	11.1 g/s
Smoke mass flow in hot water handling mode at P max.	11.1 g/s	12.9 g/s
Released system types	C13, C33, C53	C13, C33, C53
Nominal efficiency at 80/60 °C	99.5 %	99.5 %
Nominal efficiency at 50/30 °C	104 %	104 %
Nominal efficiency in partial load operation (30%) at 40/30 °C	108.5 %	108.5 %
NOx class	5	5
Product dimensions, width	418 mm	418 mm
Product dimensions, depth	300 mm	300 mm
Product dimensions, height	740 mm	740 mm
Net weight	32 kg	32.6 kg
Weight when filled with water	36 kg	37.1 kg

Technical data – Electrics

	EASICOM 2 24c	EASICOM 2 28c
Electric connection	230 V / 50 Hz	230 V / 50 Hz
Built-in fuse (slow-blow)	T2/2A, 250V	T2/2A, 250V
Max. electrical power consumption	105 W	110 W
Standby electrical power consumption	2 W	2 W
Level of protection	IPX4D	IPX4D

Index

A
Air/flue pipe
Installing 12
Air/flue pipe, installed 5
Article number 7
B
Burner anti-cycling time 20
C
Calling up the fault memory 25
CE label 8
Check programmes 29
Using 15
Checking the burner 23
Checking the pre-charge pressure of the expansion vessel 25
Cleaning the condensate siphon 24
Cleaning the heat exchanger 23
CO_2 content
Checking 19, 21
Combustion air 5
Completing inspection work 25
Completing maintenance work 25
Completing repair work 28
Completing, repair work 28
Condensate drain pipework 12
Condensate siphon
Filling 18
Controller 14
Controlling the bypass 21
Corrosion 5
D
Decommissioning 28
Decommissioning the product 28
Diagnostics codes
Using 15
Documents 7
Draining the product 25
E
Electricity 5
Expansion relief valve 28
F
Fault codes 25
Fault symbol 15
Flow rate-pressure curves 20
Flow sensor 28
Flue gas route 5
Front casing, closed 5
Frost 5
H
Handing over to the operator 21
I
Identification plate 7
If you smell gas 4
Inspection work 21, 38
Installation site 5
Intended use 4
M
Mains connection 14
Maintenance work 21, 38
P
Power supply 14
Preparing the repair work 25
Preparing, repair work 25
Pressure sensor 28
Pump 20
Pump head 27
Pump output
Setting 20
R
Regulations 6
Removing the air intake pipe 22
Removing the burner 22
Removing the flue pipe 22
Removing the gas-air mixture unit 22
Removing the ignition transformer 22
Removing the side section 10
Replacing the burner 25
Replacing the expansion vessel 27
Replacing the gas valve 25
Replacing the heat exchanger 26
Replacing the main PCB 27
Replacing the PCB for the user interface 28
Replacing, expansion vessel 27
Resetting the burner anti-cycling time 20
S
Safety device 5
Schematic drawing 5
Serial number 7
Setting the burner anti-cycling time 20
Spare parts 21
Switching on the product 17
T
Tool 6
Transport 5
Transporting 8
Treating the heating water 16
U
Unloading the box 8
Unpacking the product 8
Using
Check programmes 15
Diagnostics codes 15
V
Voltage 5
W
Weight 9

Publisher/manufacturer
Glow-worm
Nottingham Road – Belper – Derbyshire DE56 1JT
Telephone 01773 824639 – Technical helpline 0330 100 7679
After sales service 0330 100 3142
www.glow-worm.co.uk

0020199151_02 - 27.08.2015 11:31:14

© These instructions, or parts thereof, are protected by copyright and may be reproduced or distributed only with the manufacturer's written consent.

Glow-worm
The energy you need