INSTALLATION & SERVICING INSTRUCTIONS FOR THE

HALSTEAD Ace

FULLY AUTOMATIC FAN ASSISTED

BALANCED FLUE COMBINATION BOILER

FOR USE WITH NATURAL GAS

BRITISH MADE BOILERS

G. C. APPLIANCE No. 47 333 10 Ace

CE 0086 EC 0063/AS/5304

TO BE LEFT WITH THE USER ADJACENT TO THE GAS METER

CONTENTS

1 GENERAL DESCRIPTION

2 TECHNICAL SPECIFICATIONS 1
2.1 Gas Categories 1
2.2 Performance data 1
2.3 Minimum clearances 1
2.4 General specifications 1
2.5 Overall appliance dimensions 1
2.6 Concentric air/flue duct specifications 3
2.8 Exploded diagram 6
2.9 Hydraulic circuit 7

3 INSTALLATION REQUIREMENTS 8
3.1 Statutory requirements 8
3.2 Boiler location 8
3.3 Flue terminal position 9
3.4 Ventilation requirements 9
3.5 Gas supply 9
3.6 Central heating system 9
3.7 Domestic hot water systems 10
3.8 Electricity supply 10
3.9 External controls 10

4.0 INSTALLING THE APPLIANCE 12
4.1 Unpacking the appliance 12
4.2 Preparing the wall 12
4.3 Mounting the boiler 13
4.4 Service connections 13
4.5 Gas connection 13
4.6 Pressure relief valve connection 13
4.7 Air/flue duct installation 14
4.8 Wiring instructions 17

5 COMMISSIONING AND TESTING 18
5.1 Filling the water system 18
5.2 Commissioning the appliance 19
5.3 DHW flow rate 20
5.4 Final checks 20
5.5 Ignition lockout 20
5.6 Overheat thermostat 20
5.7 Frost protection 20
5.8 Other features 20
5.9 User's instructions 20
5.10 Boiler logbook 20

6 ROUTINE SERVICING INSTRUCTIONS 21

7 INTERNAL WIRING DIAGRAMS 23
7.1 Functional flow diagram 23
7.2 Illustrated wiring diagram 24

8 FAULT FINDING 25
8.1 General 25
8.2 Diagnostic indicator LED's 25
8.3 Ignition faults 25
8.4 DHW fault finding 25
8.5 Central heating fault finding 25

9 REPLACEMENT OF PARTS 27
9.1 Heat exchanger 27
9.2 Combustion chamber insulation 27
9.3 Fan assembly 27
9.4 Burner 27
9.5 Ignition and detection electrodes 27
9.6 Multifunctional gas control 27
9.6.1 Gas control replacement 27
9.6.2 Gas control and PCB burner pressure setting procedure . .27
9.7 Air Pressure switch 28
9.8 Overheat thermostat 28
9.9 PCB 28
9.10 CH/DHW Microswitches 29
9.11 Thermistors D.H.W. or Heating 29
9.12 Water flow regulator 30
9.13 DHW heat exchanger 30
9.14 DHW flow switch body 30
9.15 Pump 30
9.16 Pressure relief valve 30
9.17 Pressure gauge 30
9.18 Auto air vent 30
9.19 System expansion vessel 31
9.20 Time clock. 31

10 SHORT PARTS LIST 31

11 Supplementary instructions for flue systems with a vertical outlet. 31

12 Supplementary instructions for flue systems incorporating an additional 90° elbow. 32

1 INTRODUCTION

The **Halstead Ace** is a fully automatic wall-mounted, fan-assisted, balanced flue, gas combination appliance for use with natural gas (G20). It incorporates a microprocessor based, fully modulating, gas control system with direct burner ignition.

The Halstead Ace features an attractive white stove enamelled casing with an inset control panel. The flue elbow and air ducts are also white stove enamelled to give a clean, attractive appearance to the installation.

The Ace provides both central heating and instantaneous domestic hot water at outputs between 8.8 kW (30,000 Btu/h) and 24 kW (82,000 Btu/h).

Heat output is controlled according to demand (in both domestic hot water and central heating mode) by the modulating gas control valve. The appliance always gives priority to domestic hot water supply.

The appliance is supplied with a standard telescopic concentric air and flue duct system suitable for flue lengths of up to 820mm (32in). The duct assembly is connected to the boiler via a turret which can exit the boiler in any horizontal direction. Horizontal extension ducts may be fitted in accordance with and up to the maximum dimensions stated in these instructions.

A vertical outlet kit is also available for installations where an outside wall is not accessible and it is desired to fit the duct 'through the roof'.

Installation using the standard flue kit is described in the main text of these instructions and supplementary instructions at the rear of this booklet describe installation involving the vertical outlet kit. **NO OTHER FLUE KITS OR EXTENSIONS MAY BE USED WITH THIS APPLIANCE.**

The appliance can be installed from inside the room without access to the external wall providing that a wall liner is fitted and that the wall thickness is less than 0.5m (19in).The wall liner is available as an optional extra. See section 4 for further details. (Note: If the vertical outlet kit is to be used, access to the roof is necessary).

The appliance is designed for use with sealed primary water systems and incorporates a circulation pump, diverter valve assembly, pressure gauge, flow switch, safety valve and system expansion vessel. A separate DHW expansion vessel is not required. Isolation valves are fitted to the service connections, and an automatic heating bypass is fitted to maintain an adequate flow rate through the boiler.

If thermostatic radiator valves are installed we recommend that one radiator is fitted with lockshield valves (normally in the bathroom) to allow pump overrun circulation.

Internal frost protection is fitted as standard equipment. The boiler may be used with any certified mains voltage room thermostat.

An electro-mechanical 24hr time clock is fitted as standard.

NOTE: ***British Standard BS7593: 1992 stresses the importance of cleansing and flushing of the system to ensure it continues to run efficiently with the minimum of maintenance necessary. Halstead Boilers fully support this professional approach and recommend that the system is cleansed with an effective chemical cleanser and protected long term with a suitable inhibitor. Such products are available from Fernox and Sentinel.***

Gas Consumer Council

The Gas Consumer Council (GCC) is an independent organisation which protects the interest of gas users. If you need advice, you will find the telephone number in your local directory under 'Gas'.

2 TECHNICAL SPECIFICATIONS

2.1 GAS CATEGORIES AND APPLIANCE CLASSIFICATION

The appliances are Certified to comply with the requirements of EN 483 and EN 625 for use in GB and IE (Great Britain and Ireland) using the following gas categories:

Ace: I_{2H} (G20 with a governed gas supply at 20 mbar (8 in.wg) inlet pressure)

The appliance classification (as defined in EN 483) may be any of the following depending on the chosen flue option: C12 or C32.

2.2 PERFORMANCE DATA HALSTEAD ACE

MODE	RATE	OUTPUT kw	OUTPUT (Btu/h)	INPUT Net kw	INPUT Net (Btu/h)	INPUT Gross kw	INPUT Gross (Btu/h)	BURNER PRESSURE mbar	BURNER PRESSURE (in.wg)
Central Heating	Max	24	(82,000)	27.0	(92,120)	30.0	(102,400)	9.7	(3.8)
	Min.	8.8	(30,000)	11.1	(37,750)	12.5	(41,900)	1.3	(0.5)
DHW	Max	24	(82,000)	27.0	(92,120)	30.0	(102,400)	9.7	(3.8)
	Min.	8.8	(30,000)	11.1	(37,750)	12.5	(41,900)	1.3	(0.5)

GENERAL

Central Heating	Max. gas rate (after 10 mins operation i.e. hot)	2.86 m³/h	(101 ft³/h)
DHW	Min. domestic hot water flow rate	2.8 l/min	(0.6 gpm)
	Design domestic hot water performance	9.8/min (2.1 gpm) raised 35°C	
	Max. domestic hot water temperature	73+/-2°C	
	Max. mains water inlet pressure	10 bar	(146 psi)
	Min. mains water inlet pressure for operation	0.3 bar	(4.4 psi)
	Min. mains water inlet pressure for max heat output	1.0 bar	(14.6 psi)
	Max. gas rate (after 10 mins operation i.e. hot)	2.86m³/h	(101 ft³/h)

2.3 MINIMUM CLEARANCES

Minimum clearances for installing and servicing the appliance refer to Fig. 1(b) below.

2.4 GENERAL SPECIFICATIONS

Main burner injector	4.86mm dia (G20)	
Total water capacity	1 litre	
Minimum CH system pressure (static head) - Cold	0.5 bar	
Maximum CH system pressure (static head) - Hot	2.5 bar	
Empty weight	45.5kg	
Max lift weight	35kg	
Total weight (full)	46.5kg	
Electrical supply	230V - 50 Hz	Fuse at 3A
Internal fuses	F 4 amp ceramic	
Maximum power consumption	160W	
Max CH flow temperature	85°C	185°F
Integral expansion vessel capacity	8 ltr. capacity	

CONNECTION SIZES

Gas	15mm compression
Central heating flow	22mm compression
Central heating return	22mm compression
Domestic water inlet	15mm compression
Domestic water outlet	15mm compression
Pressure relief valve outlet	15mm tail

2.5 OVERALL DIMENTIONS AND MINIMUM CLEARANCES

1

1(a)

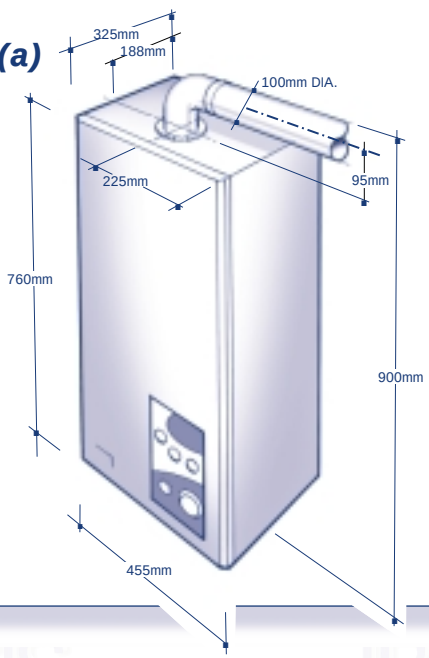

NOTE:
10mm for normal operation 450mm for installation and servicing

1(b)

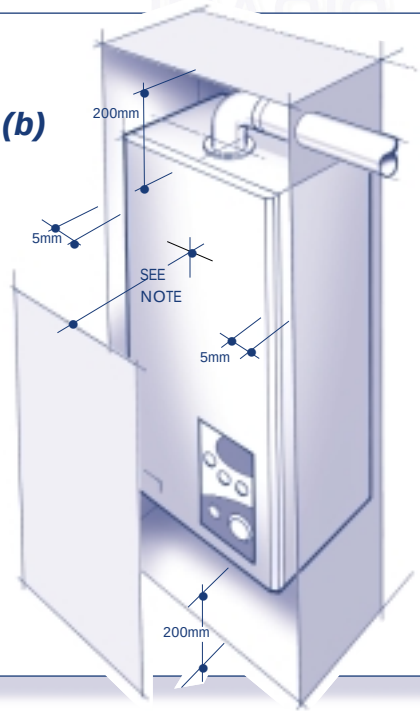

2 EXAMPLES OF ALTERNATIVE FLUE SYSTEMS

2(a) HORIZONTAL STRAIGHT FLUE

SUPPLIED AS STANDARD

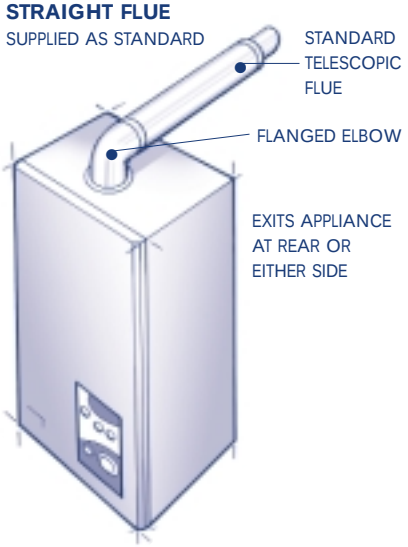

2(b) HORIZONTAL STRAIGHT FLUE

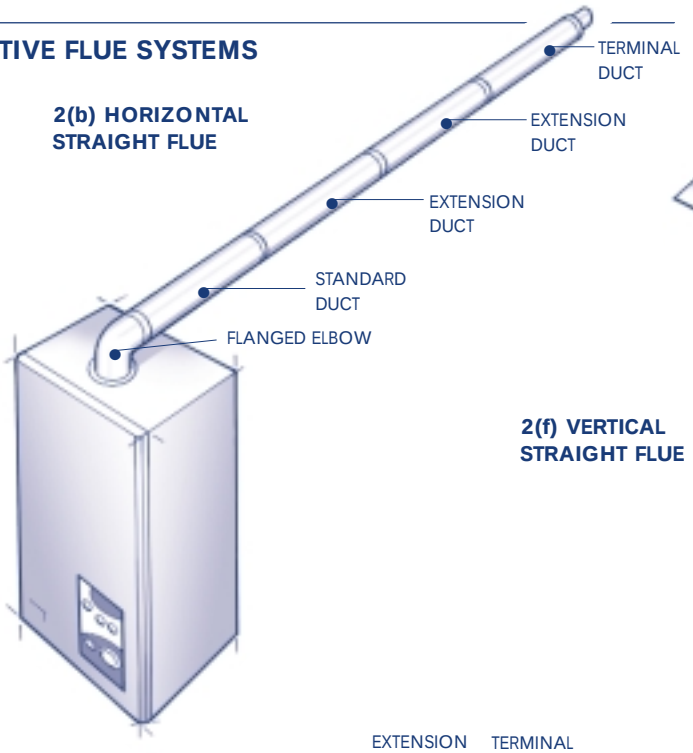

2(f) VERTICAL STRAIGHT FLUE

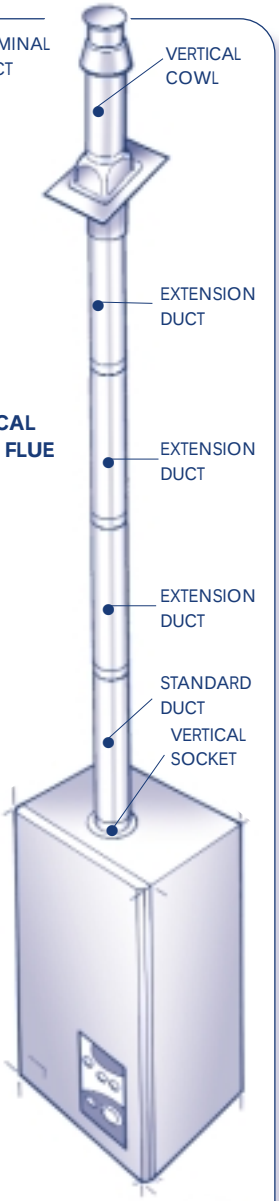

2(c) RAISED HORIZONTAL STRAIGHT FLUE

3 COMPONENTS AS SHOWN

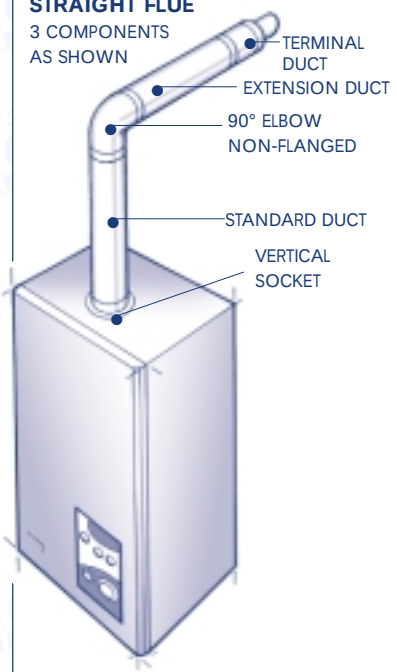

2(d) FLUE WITH 90° BEND

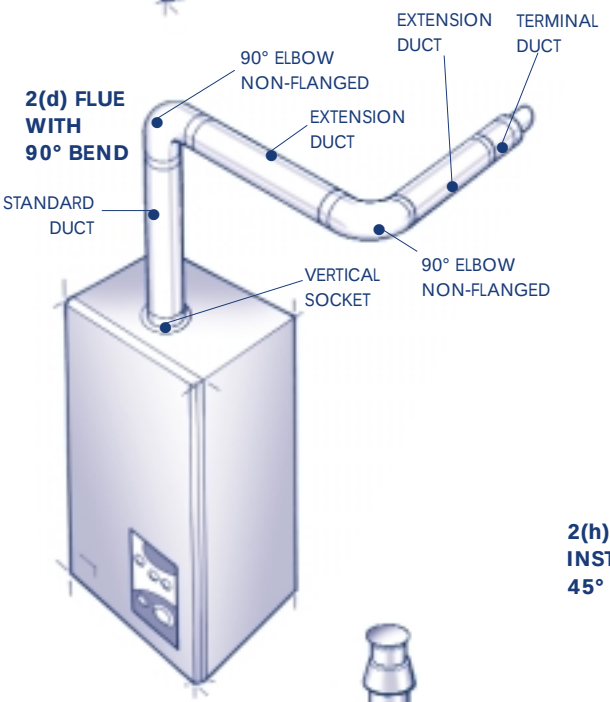

2(h) TYPICAL VERTICAL INSTALLATION USING 45° ELBOWS

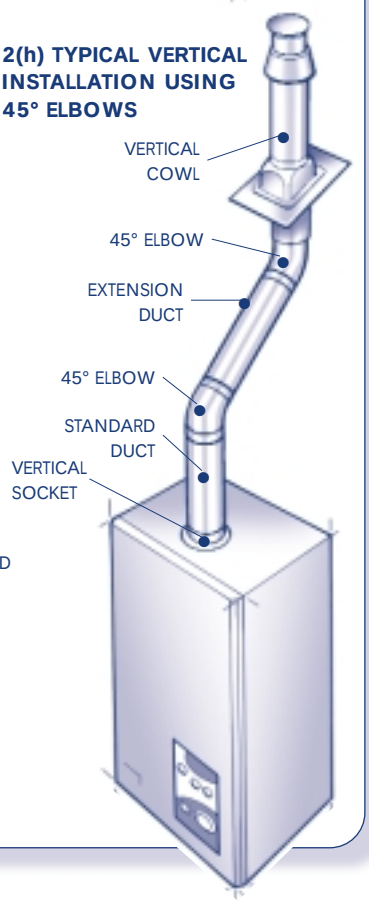

2(e) HORIZONTAL FLUE WITH 90° BEND

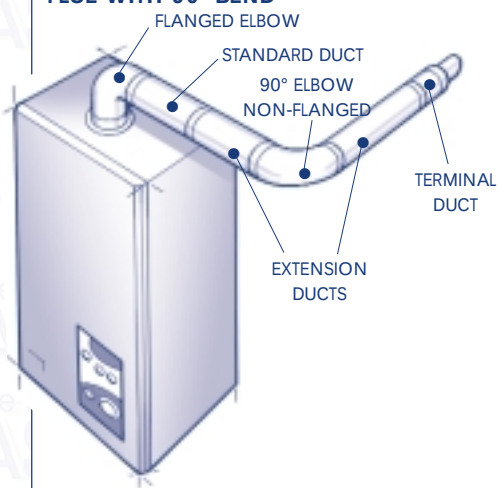

2(g) OFFSET VERTICAL FLUE

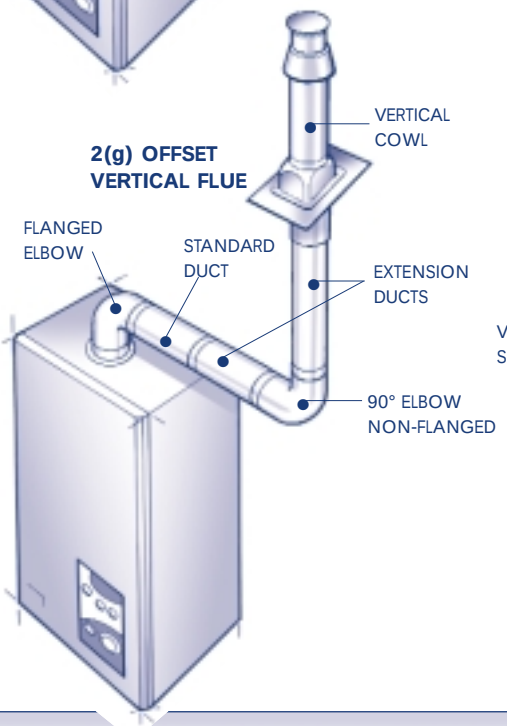

The appliance is supplied complete with a standard telescopic flue kit. This comprises a standard duct and a terminal duct and can be used for flue lengths between 506mm and 820mm without cutting the ducts. To use terminal duct for flue length between 300 and 506 mm the ducts need cutting. Avoid swarf and sharp edges to maintain telescopic function

The following additional concentric kits are available as optional extras.

Extension duct (each extension extends the flue length by up to 767 mm)

90° Elbow (Allows an additional bend in the flue and has an 'equivalent length' of 767 mm.) This elbow is mechanically different from the flanged elbow supplied as standard with the appliance, but has the same equivalent length of 767mm.

Socket (for use with elevated horizontal flues and vertical cowls)

Vertical Cowl Kit. (For use where an external wall is not available)

These optional kits may be used with the standard flue kit to produce an extensive range of flue options. Examples are illustrated in Figure 2. Variations upon these illustrations may be used providing that the following rules are strictly obeyed.

a) The maximum/minimum permissible allowable length of the flue system is:

horizontal flue terminal - maximum 3000 mm (118 in) - 'L'

vertical flue terminal - maximum 4618 mm (182 in) - 'Lh'

horizontal flue terminal - minimum 300mm - 'L'

vertical flue terminal - minimum 565 mm - 'Lh'

3 SPECIFICATION FOR STANDARD AND EXTENDED STRAIGHT FLUES

(Refer to section 2.6(a) for maximum allowable lengths)

3(a)

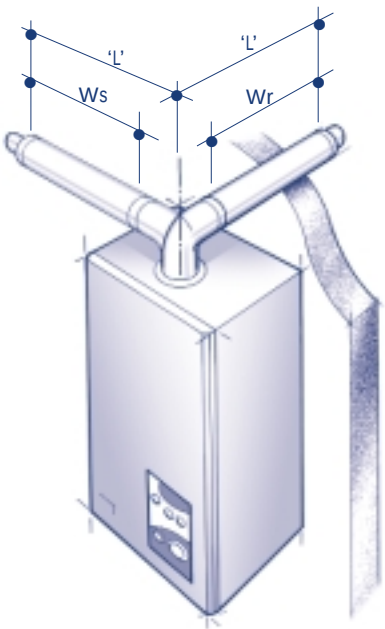

Fig 3a - Standard flue assembly using either side or rear outlet.

Flue length 'L' (measured from the boiler outlet centre line to the outside wall face) = max 820

Maximum wall thickness Wr (Rear outlet) = 630 max

Maximum wall thickness Ws (either side outlet) = 590 max.

(Allowing for minimum clearance of 5mm)

3(b)

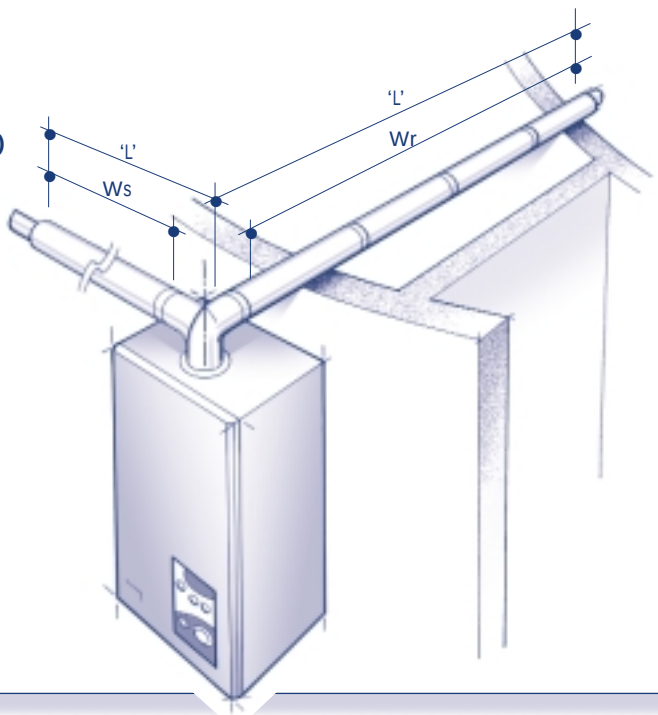

Fig 3b - Standard flue assembly with optional straight extensions using either side or rear outlet

Refer to the following table:
(Definitions of lengths 'L', Wr and Ws are as given in the table below)

NUMBER OF EXTENSION KITS	LENGTH L"	Wr (REAR)	Ws (SIDE)
ONE	1587	1387	1357
TWO	2354	2164	2124
THREE	3000	2810	2770

SPECIFICATION FOR FLUE SYSTEMS WITH AN EXTRA 90° ELBOW

(Refer to section 2.6(a) for maximum allowable lengths)

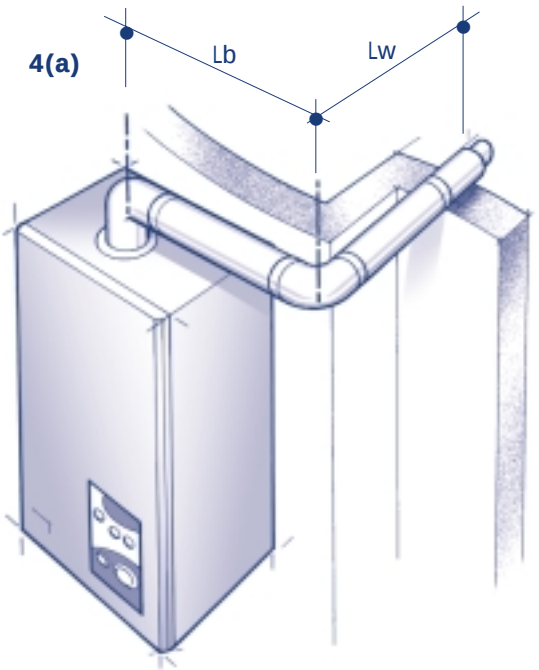

Fig 4a - Use of the flanged elbow, one extension kit, 90° elbow, and standard flue assembly.

Equivalent length Shown is 3045mm Where 'Lb' is 919mm and 'Lw' is 820mm

(Lw is measured to the outside wall face.)

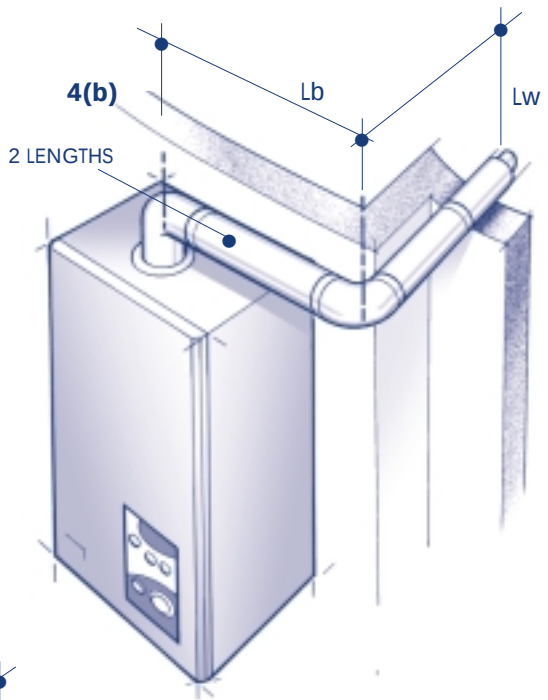

Fig 4b - As 4a but with one additional extension in length 'Lb

Equivalent length Shown is 3767mm Where 'Lb' is 1634mm and 'Lw' is 820mm

(Lw is measured to the outside wall face.)

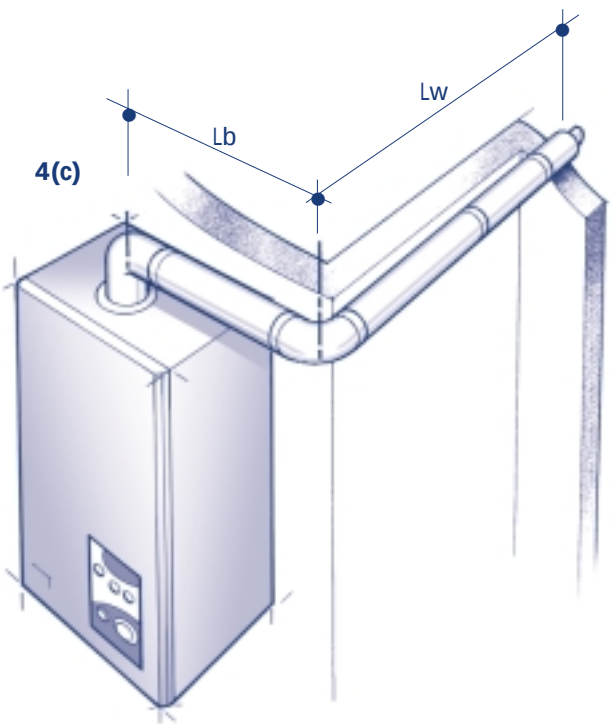

Fig 4c - As 4a but with one additional extension in length 'Lw'

Equivalent length Shown is 3767mm Where 'Lb' is 919mm and 'Lw' is 1535mm

(Lw is measured to the outside wall face.)

b) The standard terminal must always be fitted horizontally. The vertical terminal must always be used if a vertical outlet is required.

c) The flue must only terminate in a horizontal or vertical position. However 90° flue elbows may be used to drop the height of the flue system by 500mm.

d) The flue system must use either a flanged elbow or a vertical flue turret socket at the entry/exit to the appliance.

e) All joints must be correctly made and secured in accordance with the installation instructions.

Refer to Figures 3 to 7 to determine which option kits are required before commencing the installation.

Installation instructions for installing the appliance with a standard flue and straight extension ducts (Fig. 3) are included in the main text of these instructions (section 4.7). Additional instructions for flue systems incorporating an additional elbow (Fig. 4), elevated flue (Fig. 5), an additional elbow and an elevated flue (Fig. 6) and vertical outlet (Fig. 7) are given in the supplements at the rear of this booklet.

5 SPECIFICATION FOR FLUE SYSTEMS WITH AN ELEVATED FLUE SYSTEM

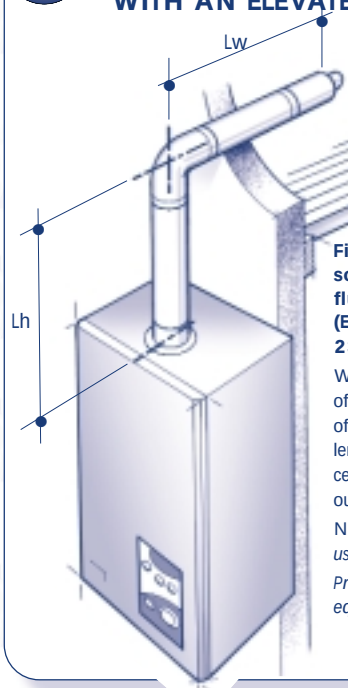

(Refer to Section 2.6 (a) for maximum allowable lengths)

Fig 5 - Use of the flanged socket, 90° elbow, standard flue assy, &1 extension (Equivalent length shown is 2328mm)

Where 'Lh' (measured from the top of the boiler casing to the centre line of the extra elbow) = 551mm and length 'Lw' (measured from the centre line of the extra elbow to the outside wall face) = 1162mm

NOTE: *Further extension kits may be used in either length Lh or Lw.*

Provided that the maximum equivalent length is not exceeded.

6 SPECIFICATION FOR FLUE SYSTEMS WITH AN ELEVATED FLUE SYSTEM INCORPORATING BENDS

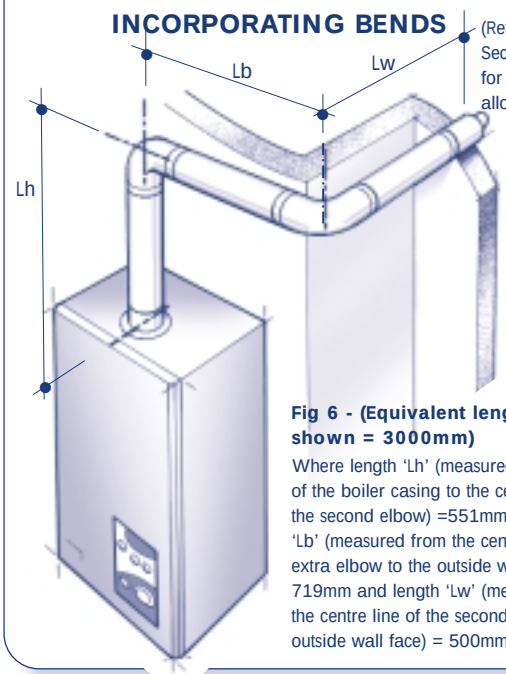

(Refer to Section 2.6 (a) for maximum allowable lengths)

Fig 6 - (Equivalent length shown = 3000mm)

Where length 'Lh' (measured from the top of the boiler casing to the centre line of the second elbow) =551mm and length 'Lb' (measured from the centre line of the extra elbow to the outside wall face)= 719mm and length 'Lw' (measured from the centre line of the second elbow to the outside wall face) = 500mm

7 SPECIFICATION FOR VERTICAL FLUE SYSTEMS

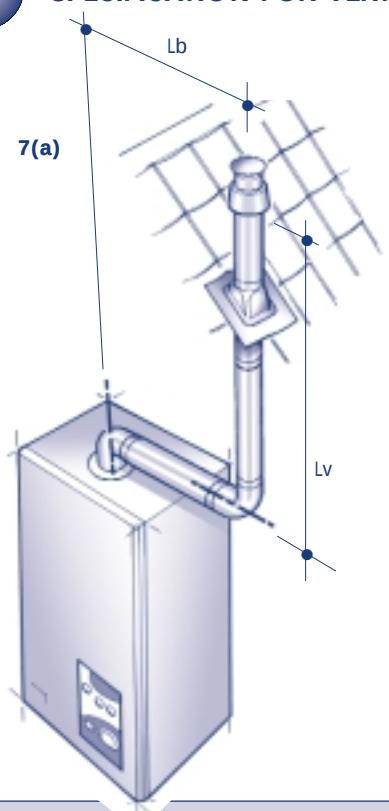

Fig 7(a) - Offset vertical flue (Equivalent length shown = 3801mm)

Maximum length 'Lb' (Measured from the boiler outlet centre line to the centre line of the extra elbow) = 1686mm (Lb shown = 919mm)

Length shown 'Lv' (measured from the centre line of the extra elbow to the underside of the air inlet cowel)= 1576mm

Lb + Lv must not exceed Lh.

Fig 7(b) Vertical extensions only: vertical socket, standard duct, and vertical cowl and adaptors with extension ducts as required.

Dimensions as follows:

Maximum length 'Lh' measured from the top of the appliance to the underside of the air inlet cowel.

NUMBER OF EXTENSION 'L' KITS	FLUE LENGTHS Lh
NONE	1550
ONE	2317
TWO	3084
THREE	3851
FOUR	4618

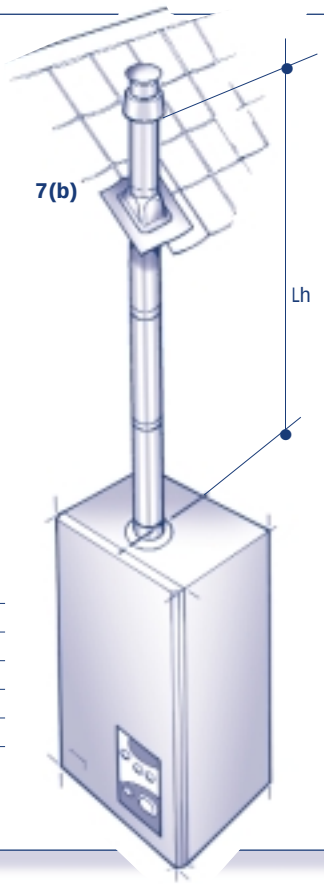

8 EXPLODED DIAGRAM (for key no. references see spare parts catalogue)

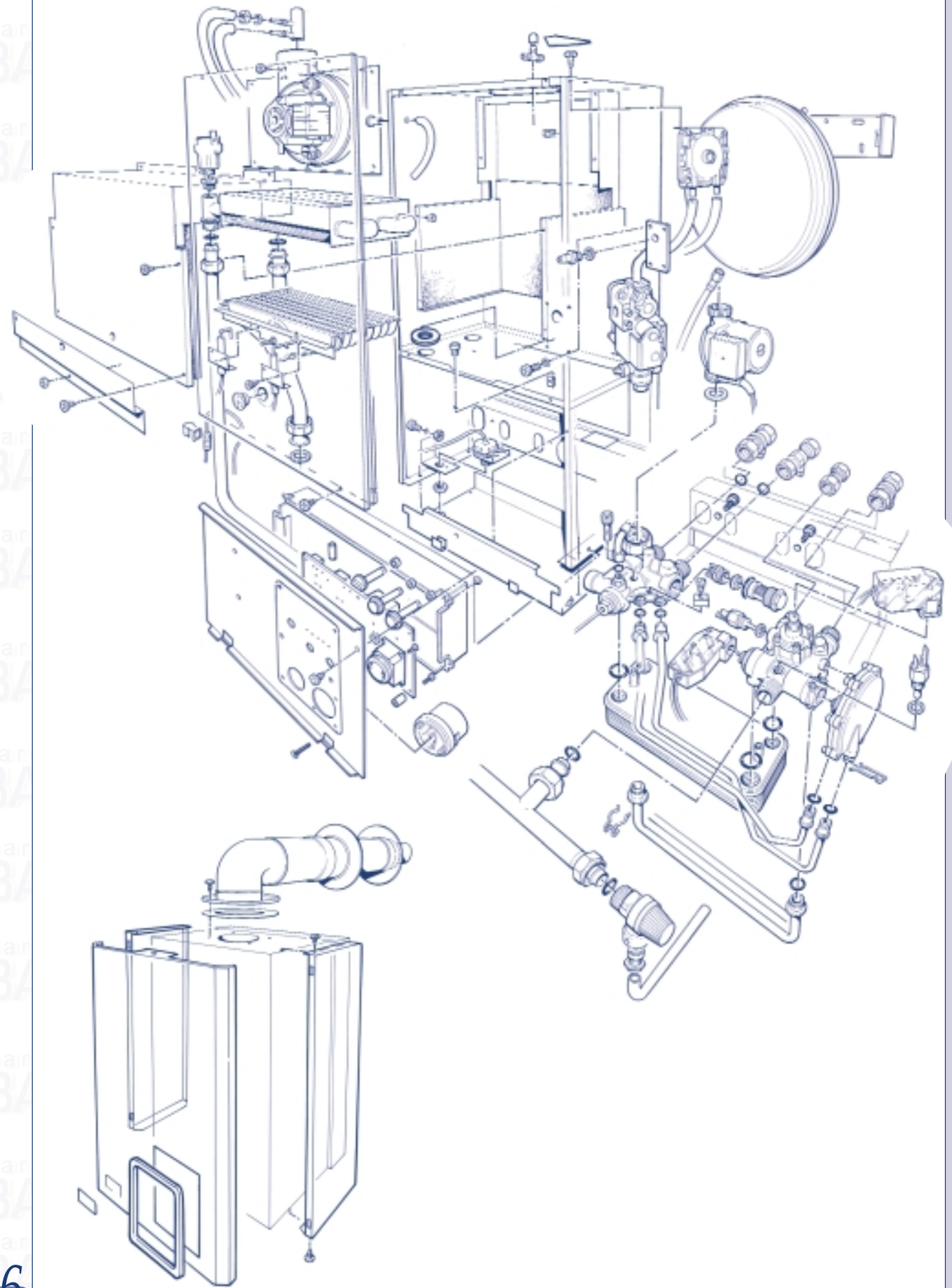

Drawing amended 8/6/00

9 HYDRAULIC CIRCUIT

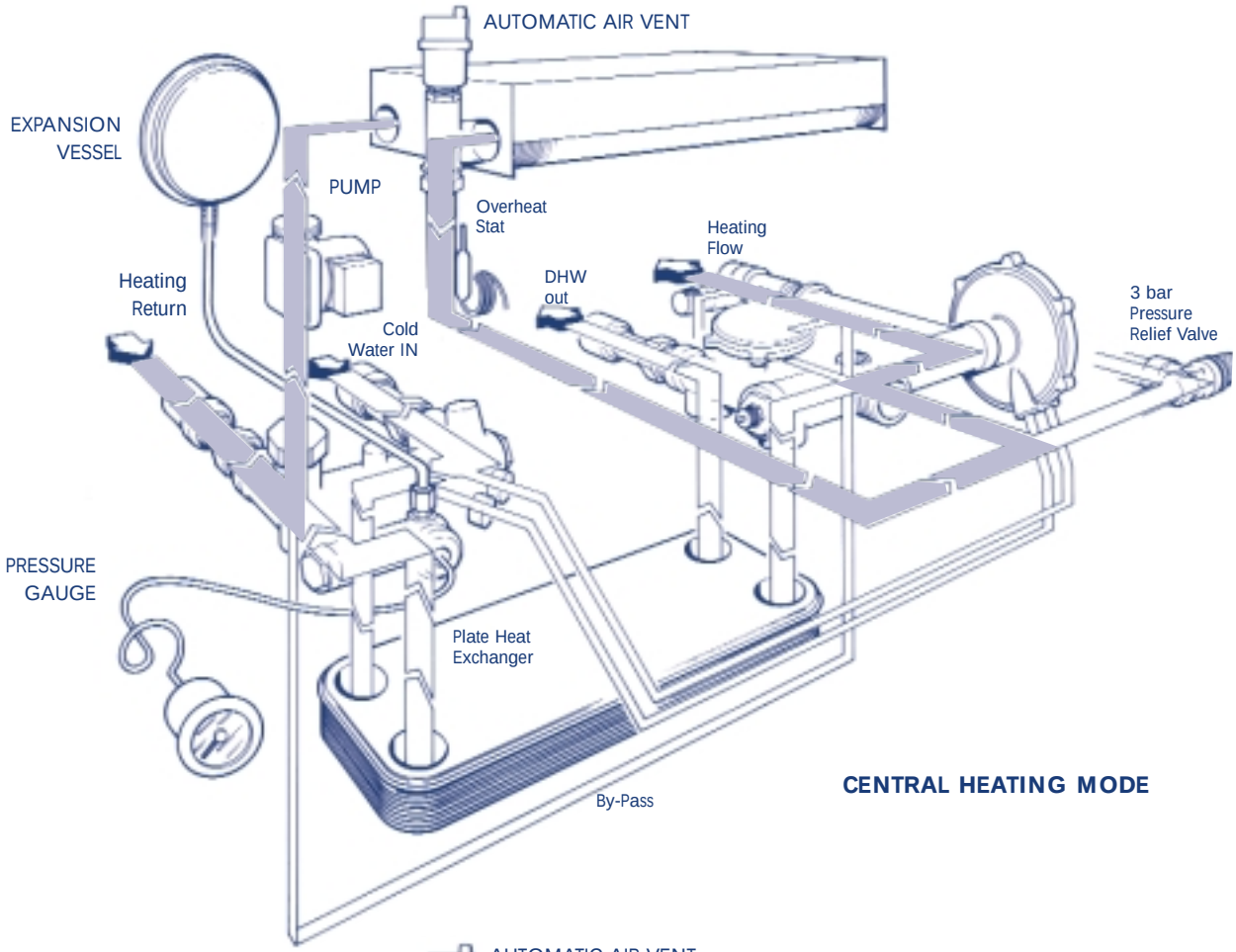

CENTRAL HEATING MODE

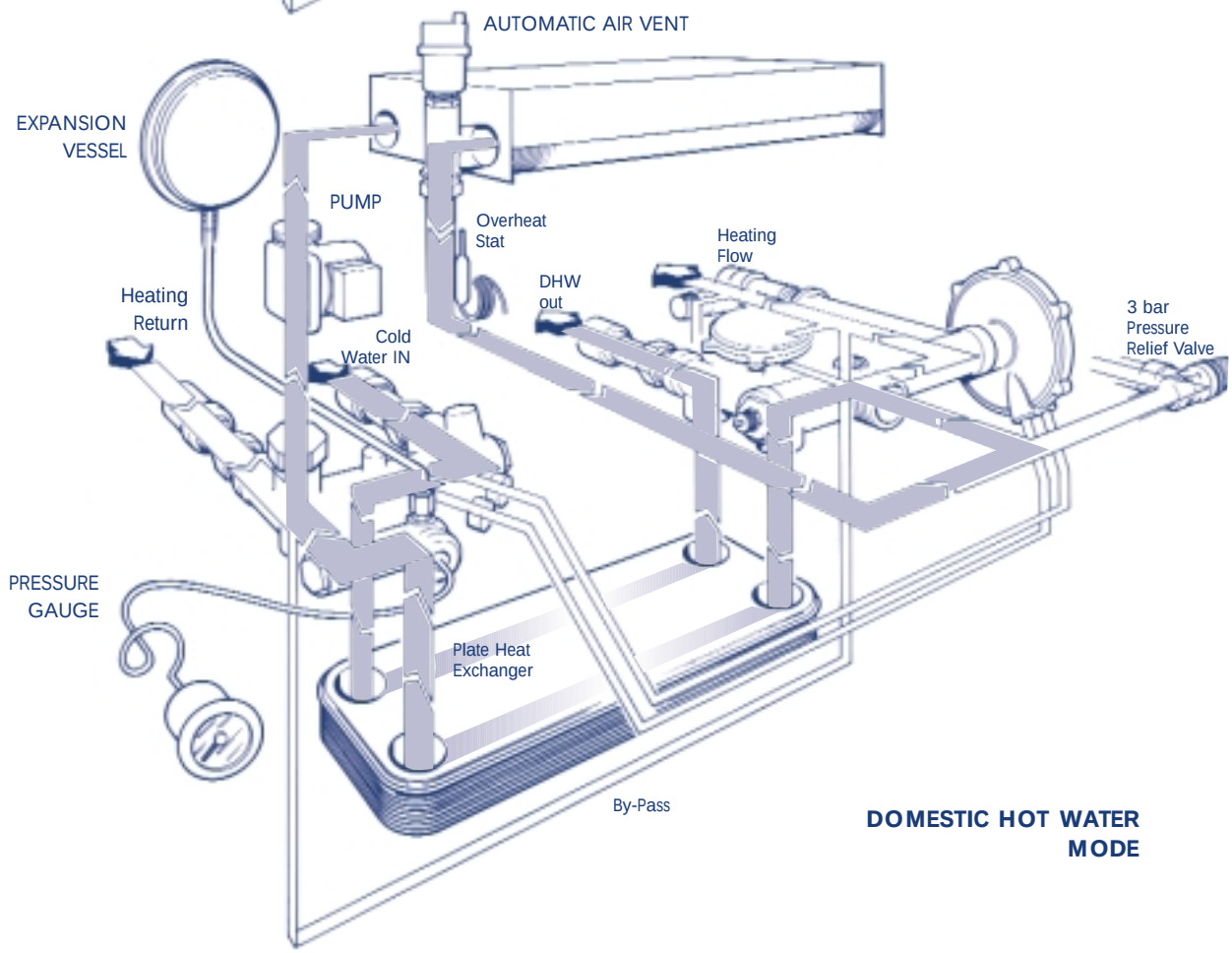

DOMESTIC HOT WATER MODE

3 INSTALLATION REQUIREMENTS

3.1 STATUTORY REQUIREMENTS

GAS SAFETY (INSTALLATION AND USE) REGULATIONS (CURRENT EDITION)

It is the law that all gas appliances are installed by a registered person, in accordance with the rules in force. Failure to install appliances correctly could lead to prosecution. It is in your own interest, and that of safety, to ensure that the law is complied with.

In addition to the above regulations, this appliance must be installed in accordance with the current IEE Wiring Regulations for electrical installation, (BS 7671), local building regulations, the Building Standards (Scotland) (Consolidation) Regulations, bye laws of the local water undertaking and Health and Safety Document No. 635 'The Electricity at Work Regulations 1989'.

It should also be in accordance with the relevant recommendations in the current editions of the following British Standards and Codes of Practice: BS5449, BS5546, BS5440:1, BS5440:2, BS6798, BS6891, Institute of Gas Engineers document IGE/UP-7 and BS7074 (expansion vessel).

IMPORTANT NOTE: Manufacturer's instructions must NOT be taken in any way as overriding statutory obligations.

3.2 BOILER LOCATION

The following limitations MUST be observed when siting the boiler:

a) The boiler is not suitable for external installation. The position selected for installation should be within the building, unless otherwise protected by a suitable enclosure, and MUST allow adequate space for installation, servicing, and operation of the appliance, and for air circulation around it. (Section 2.3 and 3.4)

b) This position MUST allow for a suitable flue system and terminal position. (Section 2.6 and 3.3) The combination boiler must be installed on a flat vertical wall which is capable of supporting the weight of the appliance and any ancillary equipment.

c) If the combination boiler is to be fitted in a timber framed building it should be fitted in accordance with the British Gas publication 'Guide for Gas Installations In Timber Frame Housing', Institute of Gas Engineers document IGE/UP-7. If in doubt, advice must be sought from the Local Gas Supplier.

d) If the appliance is to be installed in a room containing a bath or a shower, any electrical switch or control utilising mains electricity must be so situated that it cannot be touched by a person using the bath or shower. Attention is drawn to the requirements of the current I.E.E. Wiring Regulations (BS7671), and in Scotland the electrical provisions of the Building Regulations applicable in Scotland.

e) A compartment used to enclose the appliance MUST be designed and constructed specifically for this purpose. An existing cupboard, or compartment, may be used provided it is modified accordingly. BS 6798 gives details of the essential features of cupboard / compartment design, including airing cupboards.

f) Where installation will be in an unusual location, special procedures may be necessary. BS 6798 gives detailed guidance on this aspect.

12 FLUE TERMINAL POSITION

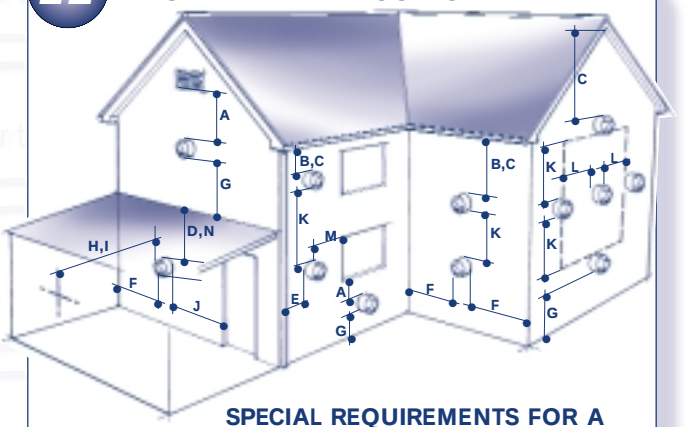

SPECIAL REQUIREMENTS FOR A VERTICALLY BALANCED FLUE

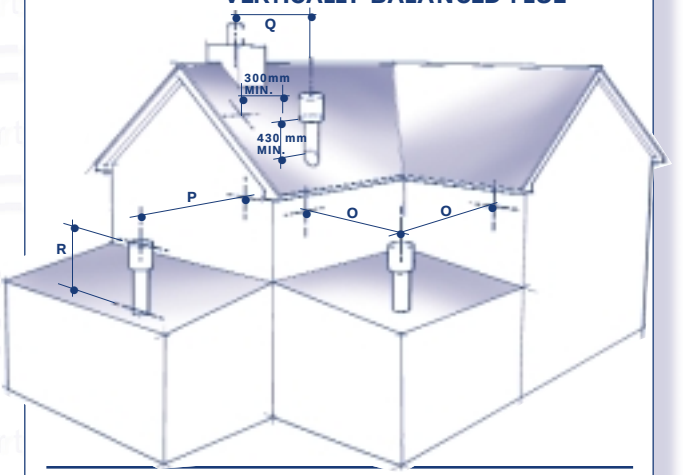

	Position	Minimum spacing	
A	Directly below an openable window, air vent, or any other ventilation opening	300mm	12in
B	Below gutter, drain/soil pipe	75mm	3in
C	Below eaves	200mm	8in
D	Below a balcony	200mm	8in
E	From vertical drain pipes and soil pipes	75mm	3in
F	From internal or external corners	300mm	12in
G	Above adjacent ground or balcony level	300mm	12in
H	From a surface facing the terminal	600mm	24in
I	Facing terminals	1200mm	48in
J	From opening (door/window) in carport into dwelling	1200mm	48in
K	Vertically from a terminal on the same wall	1500mm	60in
L	Horizontally from a terminal on the same wall	300mm	12in
M	Adjacent to opening	300mm	12in
N	Below carport	600mm	24in
O	From adjacent wall	300mm	12in
P	From adjacent opening window	1000mm	40in
Q	From another terminal	600mm	24in
R	Minimum height	300mm	12in

3.3 FLUE TERMINAL POSITION

Detailed recommendations for flue installation are given in BS 5440:1. The following notes are for general guidance.

a) The boiler MUST be installed so that the terminal is exposed to the external air.

b) It is important that the position of the terminal allows free passage of air across it at all times.

c) It is ESSENTIAL TO ENSURE that products of combustion discharging from the terminal cannot re-enter the building, or any other adjacent building, through ventilators, windows, doors, other sources of natural air infiltration, or forced ventilation / air conditioning.

d) The minimum acceptable dimensions from the terminal to obstructions and ventilation openings are specified in Fig.12.

e) If the terminal discharges into a pathway or passageway check that combustion products will not cause nuisance and that the terminal will not obstruct the passageway.

f) Where the lowest part of the terminal is fitted less than 2m (78ins) above ground, above a balcony or above a flat roof to which people have access, the terminal MUST be protected by a purpose designed guard. (Available as an optional extra)

g) Where the terminal is fitted within 850mm (34in) of a plastic or painted gutter, or 450mm (18in) of painted eaves, an aluminium shield at least 750mm long must be fitted to the underside of the painted surface.

h) The air inlet / flue outlet duct MUST NOT be closer than 25mm (1in) to combustible material.

i) In certain weather conditions the terminal may emit a plume of steam. This is normal but positions where this would cause a nuisance should be avoided.

3.4 VENTILATION REQUIREMENTS

Detailed recommendations for air supply are given in BS 5440:2. The following notes are for general guidance.

a) It is not necessary to have a purpose provided air vent in the room or internal space in which the appliance is installed.

b) If the boiler is to be installed in a wall cupboard permanent air vents are required for cooling purposes in the cupboard at both high and low levels. Both air vents must communicate with either the same internal room / space or be on the same wall to external air. Each air vent communicating with another room or internal space must have a minimum effective area of:

Ace - 300cm^2 (46.5in^2)

If the ventilation is direct to air from outside the building, the necessary areas quoted above may be halved.

If the cupboard or compartment is full room height (2.3 m min.) then NO purpose made ventilation is required.

3.5 GAS SUPPLY

a) The Gas Supplier should be consulted at the installation planning stage in order to establish the availability of an adequate supply of gas.

b) An existing service pipe MUST NOT be used without prior consultation with the Gas Supplier.

c) A gas meter can only be connected by the Gas Supplier or by their contractor.

d) An existing meter and/or pipework should be of sufficient size to carry the maximum boiler input plus the demand of any other installed appliance. (BS 6891: 1988). **A minimum of 22mm dia. pipework is required to within 1 metre of the appliance gas cock.**

e) The governor at the meter must give a constant outlet pressure of 20mbar (8 in.wg) when all appliance's on the system are running.

f) The gas supply line should be purged. WARNING: Before purging open all doors and windows, also extinguish any cigarettes, pipes, and any other naked lights.

g) The complete installation must be tested for gas soundness .

3.6 CENTRAL HEATING SYSTEMS

a) This appliance is designed for connection to sealed central heating water systems. Refer to Fig. 15 for a typical system design.

b) A sealed system must only be filled by a competent person.

c) The available pump head is given in Fig. 13.

d) A minimum heating flow rate corresponding to a heating differential of 15°C must be obtained at all times.

e) An automatic heating bypass is fitted within the appliance. However if thermostatic radiator valves are fitted, a radiator must be fitted with two lockshield valves.

f) The following paragraphs outline the specifications of the items fitted to the boiler.

PUMP

The available head shown in Fig. 13 is that in excess of the appliance hydraulic resistance, i.e. that available for the system.

13 AVAILABLE PUMP HEAD

2m HEAD

Bth/hr.	Kw	Flow rate	Δt°C
82,000	24.00	17.5l/m	20.0
72,000	21.00	17.5l/m	17.7
65,000	19.00	17.5l/m	15.5
61,500	18.00	17.5l/m	13.3
30,700	9.00	17.5l/m	7.5

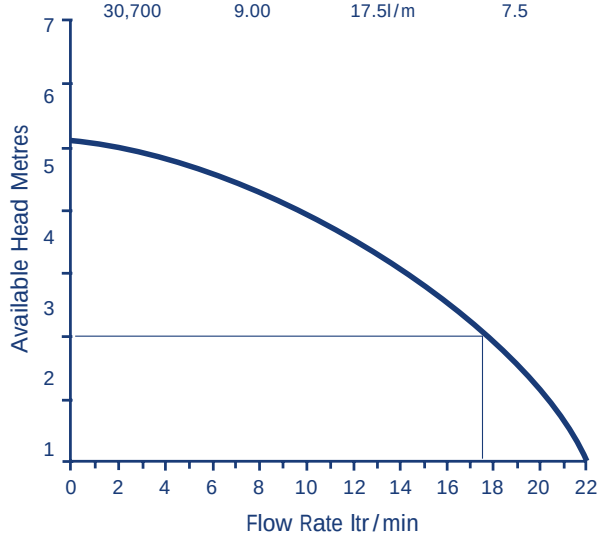

14 ALTERNATIVE METHODS OF FILLING A SEALED SYSTEM

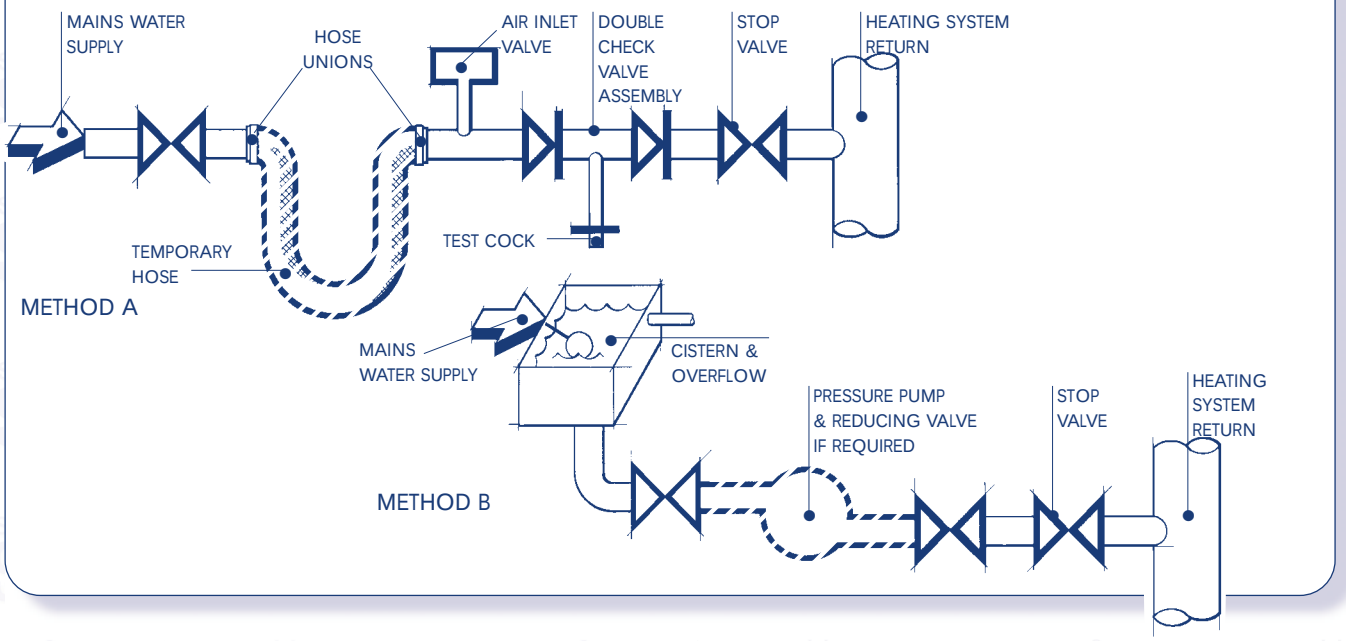

EXPANSION VESSEL

The table below shows the maximum system volume that the integral expansion vessel can sustain under different charge pressure conditions (pre-charged to 0.75 bar). If the system volume exceeds that shown, an additional expansion vessel must be fitted and connected to the heating system primary return pipe as close as possible to the appliance. If an extra vessel is required, ensure that the total capacity of both vessels is adequate. Further details are available in the current issues of BS5449 and BS6798.

NOTE: ***If the pressure gauge indicates 2.65 bar or greater when the appliance is at maximum temperature with all radiators in circulation an extra expansion vessel is required.***

PRESSURE GAUGE A pressure gauge is situated on the appliance control panel.

PRESSURE RELIEF VALVE A pressure relief valve set at 3 bar (43.5 psi) is supplied with the appliance.

EXPANSION VESSEL REQUIREMENTS

Vessel charge and initial system pressure	bar	0.5	0.75	1.0	1.5
	psi	7.3	11	14.5	21.8
Total water content of system using 8ltr. (1.54gal) capacity expansion vessel supplied with appliance		96ltr	84ltr	73ltr	50ltr
		21gal	18gal	16gal	11gal
For systems having a larger capacity multiply the total system capacity in litres (gallons) by the factor to obtain the total minimum expansion vessel capacity required litres (gallons)		0.0833	0.093	0.109	0.156

3.7 DOMESTIC HOT WATER SYSTEM

a) Check that the mains water pressure is sufficient to produce the required DHW flow rate, but does not exceed the maximum DHW pressure (10 bar). If necessary, a pressure reducing valve must be fitted to the mains supply before the DHW inlet connection.

b) The final 600mm (24in) of the mains supply pipe to the boiler must be copper.

c) A domestic hot water regulator is fitted within the group set to control the maximum water flow rate. This may be removed to obtain higher flow rates. Higher flow rates will not damage the appliance but may reduce the water temperature below an acceptable level.

d) If the appliance is installed in an area where the temporary hardness of the water supply is high, say over 150ppm, the fitting of an in-line scale inhibitor may be an advantage. Consult the Local Water Supplier if in doubt.

e) For specific information relating to fittings (eg. Showers, Washing Machines etc) suitable for connection in the DHW circuit, consult the Local Water Supplier. However the following information is given for guidance:

DOMESTIC HOT/COLD WATER SUPPLY TAPS AND MIXING TAPS. All equipment designed for use at mains water pressure is suitable.

SHOWERS & BIDETS. Any mains pressure shower or bidet complying with the Local Water Undertaking bylaws is suitable.

3.8 ELECTRICITY SUPPLY

a) Wiring external to the appliance must be in accordance with the current I.E.E. Wiring Regulations (BS 7671) for electrical installation and any local regulations which apply.

b) The mains cable must be at least 0.75mm^2 (24/0.2mm) PVC Insulated to BS6500 table 16.

c) **THIS APPLIANCE MUST BE EARTHED.** (Failure to provide a satisfactory Earth connection will result in appliance malfunction)

d) The method of connection to the mains supply must facilitate complete electrical isolation of the appliance. Either a 3A Fused three pin plug and unswitched shuttered socket outlet, both complying with BS1363, or a 3A fused double pole switch having a 3mm contact separation in both poles and serving only the boiler (and its external controls) may be used.

3.9 EXTERNAL CONTROLS

The appliance may be used with any Certificated mains voltage room thermostat and/or single channel programmer as described in section 4.8.

15 TYPICAL SYSTEM DESIGN

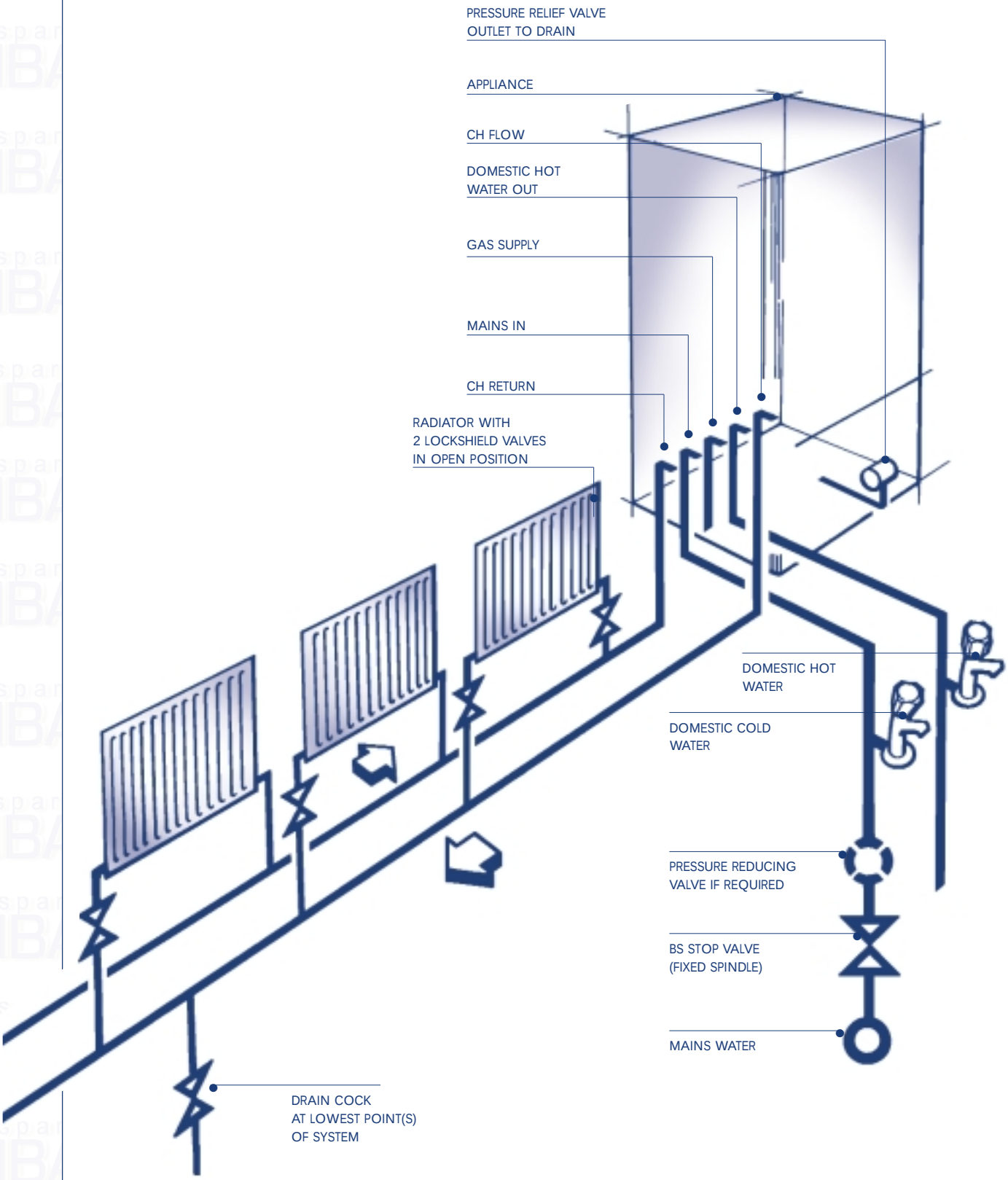

Note: *The boiler incorporates an automatic bypass, hence no other system bypass is necessary.* ***However if TRV's are installed at least one radiator (preferable in the bathroom) must be permanently open, ie. fitted with two lockshield valves.***

4 INSTALLING THE APPLIANCE

Before installing the appliance, check that the chosen location is suitable (section 3.2), and that the requirements for flue position (section 3.3), and minimum clearances (Fig. 1b) are satisfied.

4.1 UNPACKING THE APPLIANCE

The appliance and standard flue kit are supplied in a single box. In addition, various optional flue kits are available as described in section 2.6. If the appliance is to be installed without access to an external wall, a wall liner kit is also required.

4.2 PREPARING THE WALL

a) Fix the paper template in the required position (ensuring that the necessary clearances are achieved) and mark the position of the fixing holes as shown in Fig. 16. Three holes are provided at each side of the wall bracket.

Mark the position of the flue outlet as described in Fig. 18. Mark the position of pressure relief outlet if required and the water and gas connections. Remove the paper template and proceed as follows.

b) Cut the hole in the wall for the air/flue duct. The diameter must not be less than 100mm and the hole must be horizontal. If the hole is not accessible from outside, it's minimum diameter must be sufficient to allow insertion of the wall liner (130mm, 5 1/4 in). The wall liner is available as an optional extra and must be sealed in position with mortar (or equivalent). It is recommended that the flue assembly falls slightly downwards away from the boiler.

c) Drill two fixing holes using a 8mm drill and insert the wall plugs provided in the hardware pack. If any of the holes fail to provide a secure fixing, use one of the adjacent holes instead.

d) Fix the bracket into position and secure to the wall using the two screws provided. Ensure it is level.

16 PAPER TEMPLATE

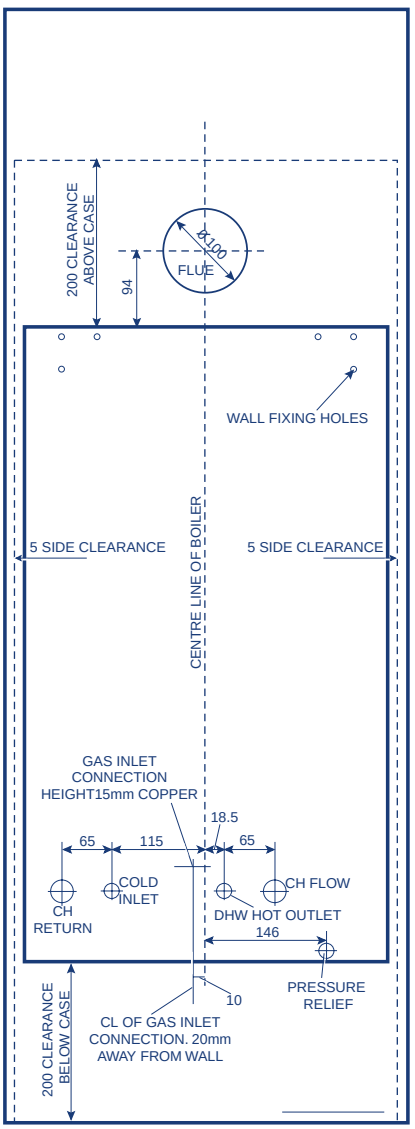

17 MOUNTING THE BOILER

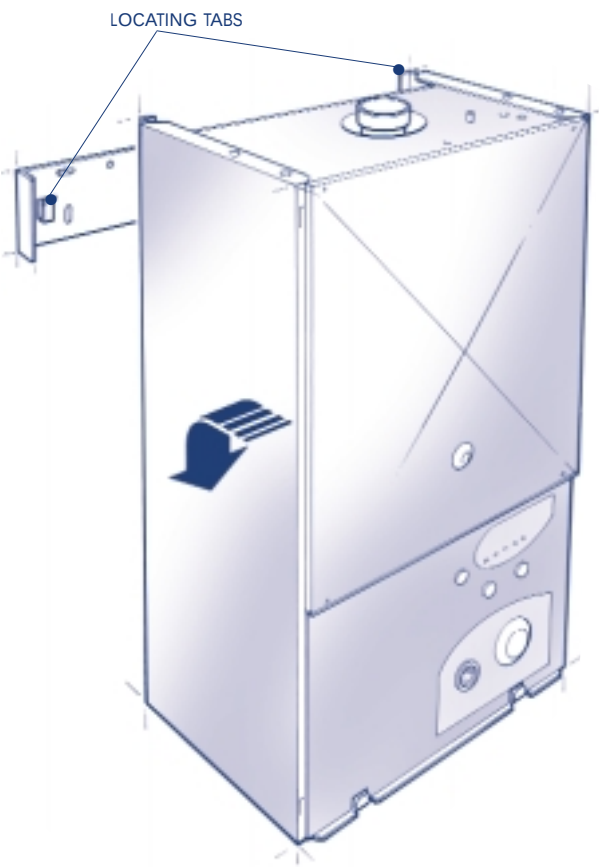

18 DETERMINING THE POSITION OF THE AIR/FLUE DUCT HOLE

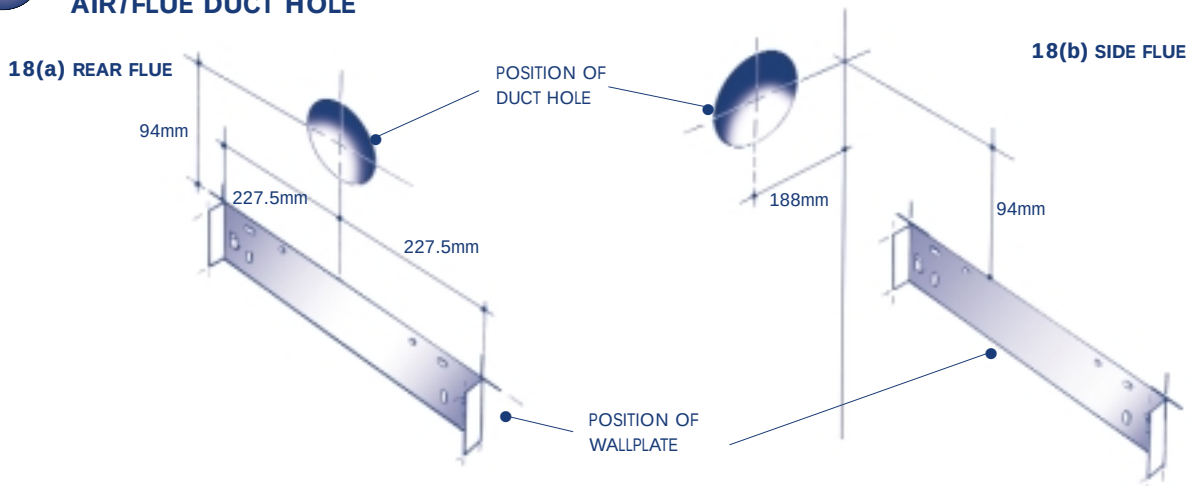

19 SERVICE CONNECTIONS (rear view)

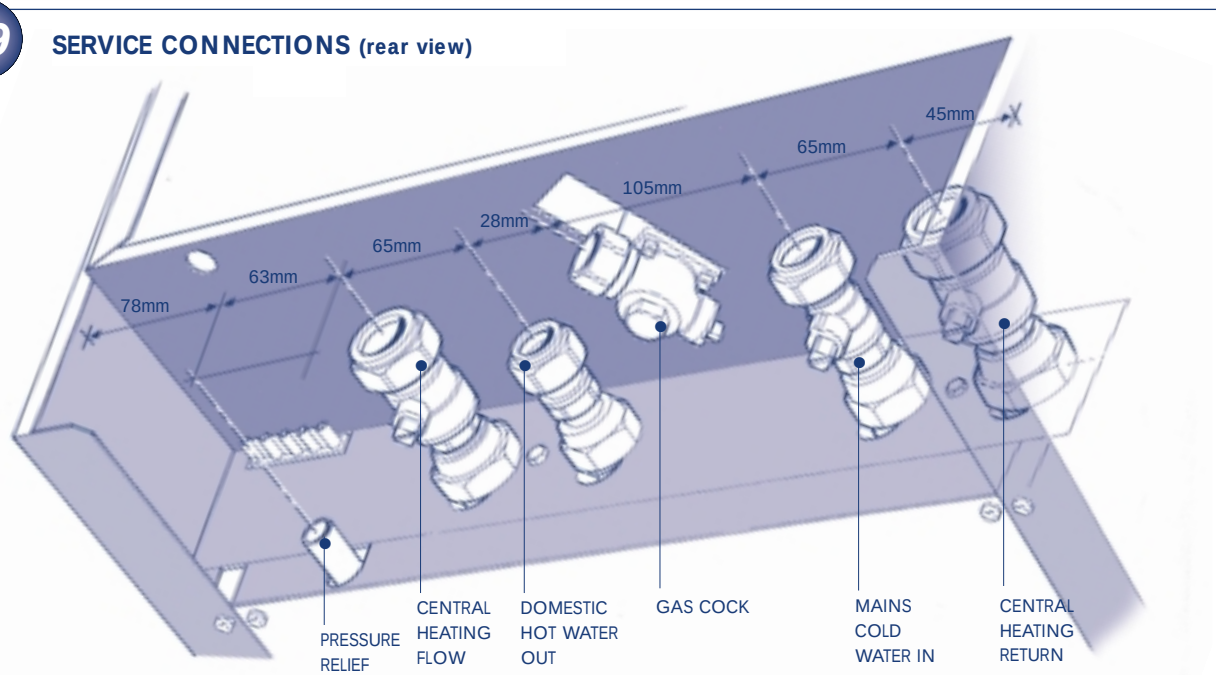

4.3 MOUNTING THE BOILER

a) Lift the boiler into position. Position the top of the boiler approximately 10mm above the top of the wall bracket and use the tabs on the wall bracket to locate the boiler in a horizontal direction, then carefully lower the boiler ensuring the two locating tabs are securely engaged (see Fig. 17).

b) Locate and tighten the water and gas valves to the boiler. (Seals are pre-fitted).

c) Connect the central heating system to the boiler flow and return using the connections shown in Fig. 19.

d) Connect the mains water supply and outlet to the appropriate connections as shown in Fig. 19.

4.4 SERVICE CONNECTIONS

a) Commission the central heating system as described in section 5.1, then proceed to section 4.5.

4.5 GAS CONNECTION

a) Use a 15mm copper tube or bend to connect to the gas service cock to a 15mm compression fitting.

4.6 PRESSURE RELIEF VALVE PIPE CONNECTION

a) Connect a suitable discharge pipe to the pressure relief valve tube. The pipe should be a minimum diameter of 15mm copper and should avoid any sharp corners or upward pipe runs where water may be retained. The discharge pipe must terminate in an area where any discharge will not cause a hazard but will be noticed.

4.7 AIR/FLUE DUCT INSTALLATION

If the wall thickness is less than 800mm (31 in) the air/flue duct may be fitted without access to the external wall providing that the optional wall liner is used. (This is necessary to seal any cavity and to allow the sealing ring to pass through from inside but still open and provide an adequate seal). The wall liner is a tube diameter 130mm with a wall thickness of 0.8mm.

4.7.1 PREPARING THE AIR/FLUE DUCTS

a) Measure the required flue length as shown in Figure 20. Refer to section 2.6 to determine whether any extension kits are required. Installations using only the standard ducts or standard ducts with straight extensions are described in this section. Installation instructions for all other flue systems are described in the supplements at the rear of this booklet.

b) Fit the external sealing ring to the terminal assembly and assemble the air/flue ducts as shown in Figure 21. The standard duct is always used at the entry / exit to the boiler, and the sliding (telescopic) terminal is always slid into the end of the standard or extension duct (where appropriate).

c) Achieve the correct flue length using Figure 22 as a guide. Note that the flue length is measured to the inside of the external wall sealing ring. In most cases it will be possible to achieve the required flue length without cutting the ducts, however where necessary the plain ends of the extension ducts may be cut. **Never cut the swaged end**, and always ensure that the cut is square and free of burrs or debris. The minimum overlap of the telescopic section is 50mm (2 in).

20 MEASURING THE EXACT FLUE LENGTH

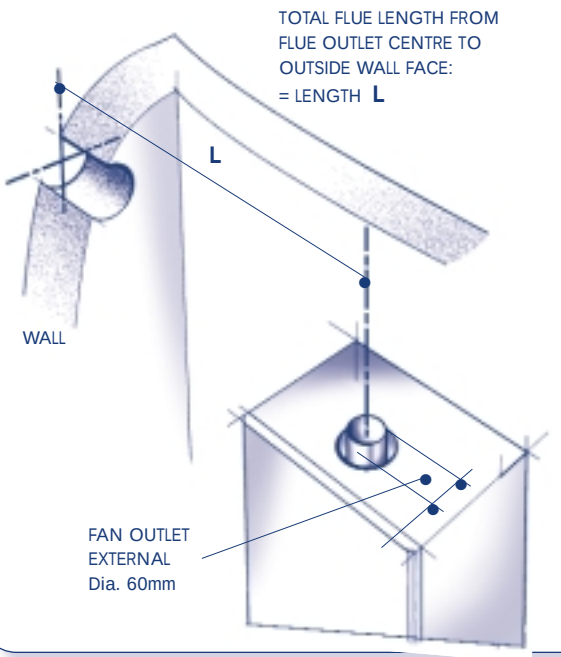

d) Assemble the flue using Figure 23 as a guide. It is important that the steps are carried out in the order stated in Figure 23. When securing the ducts in position always drill two 3.3 mm diameter holes in each extension air duct joint and use the self tapping screws provided to secure each joint.

NOTE IT IS ESSENTIAL THAT THE TERMINAL IS FITTED THE CORRECT WAY UP See Fig 21 (i.e. rainshield at the top).

21 AIR/FLUE DUCT ASSEMBLY

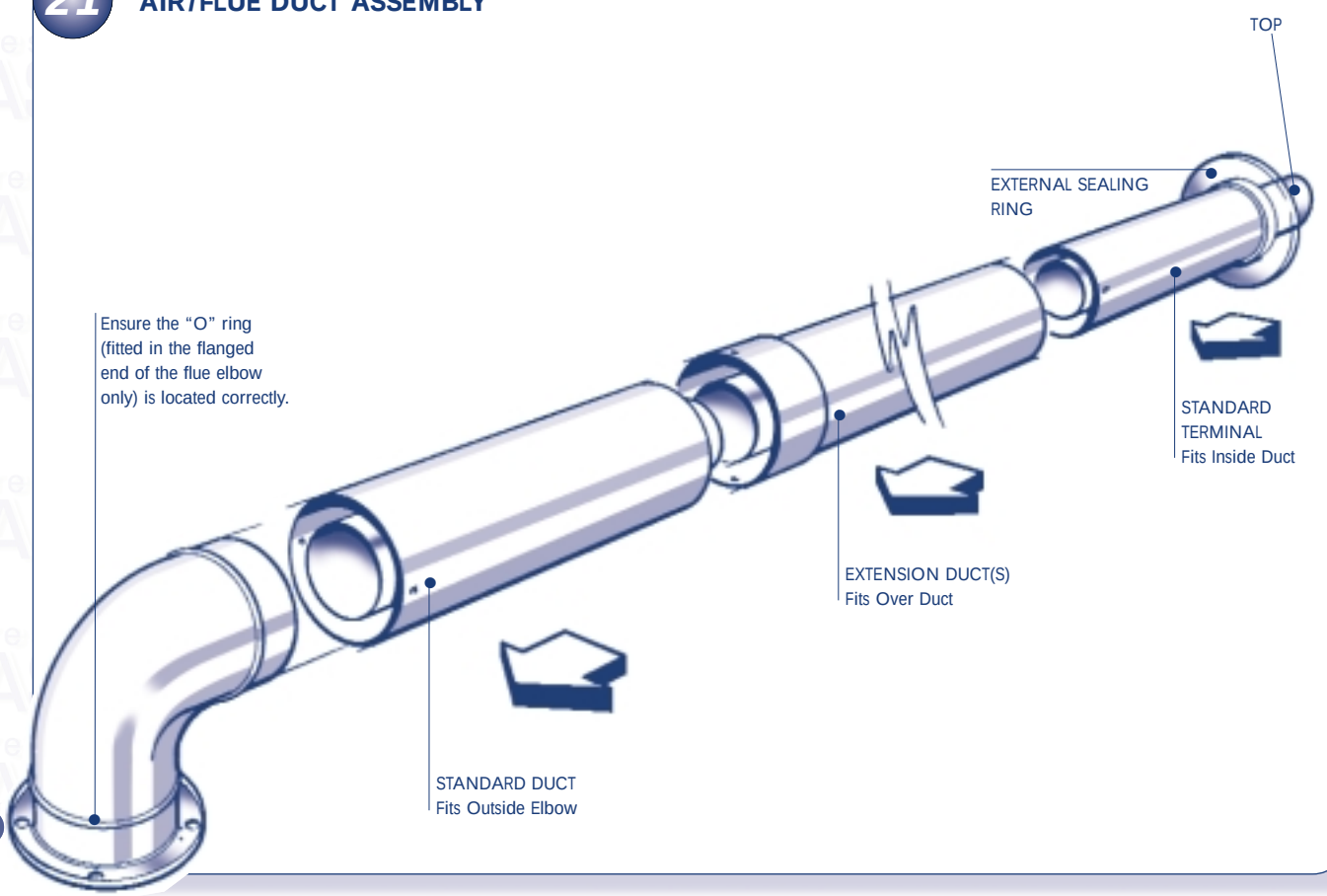

22 ACHIEVING THE CORRECT FLUE LENGTH

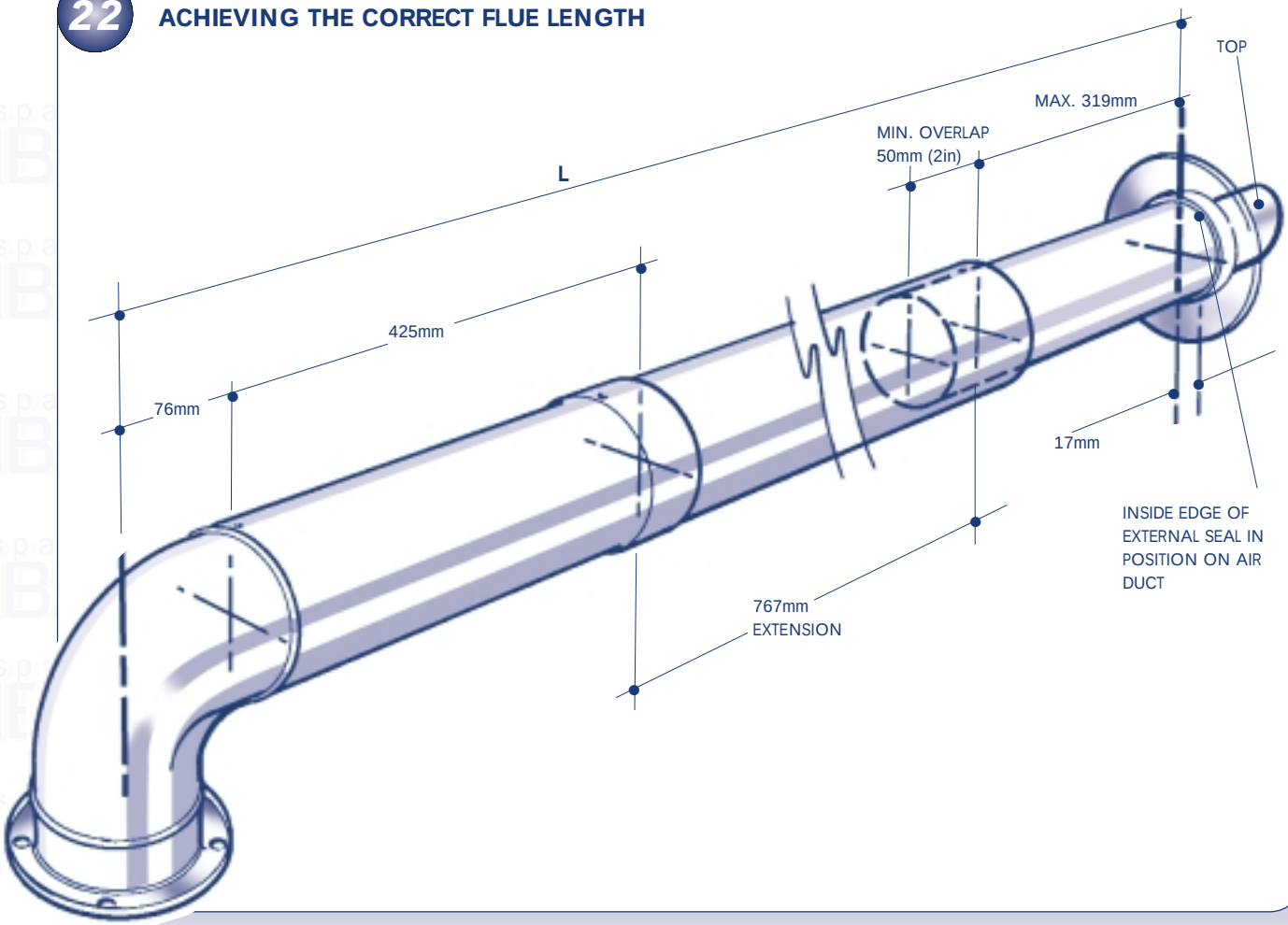

23 ASSEMBLING THE FLUE SYSTEM

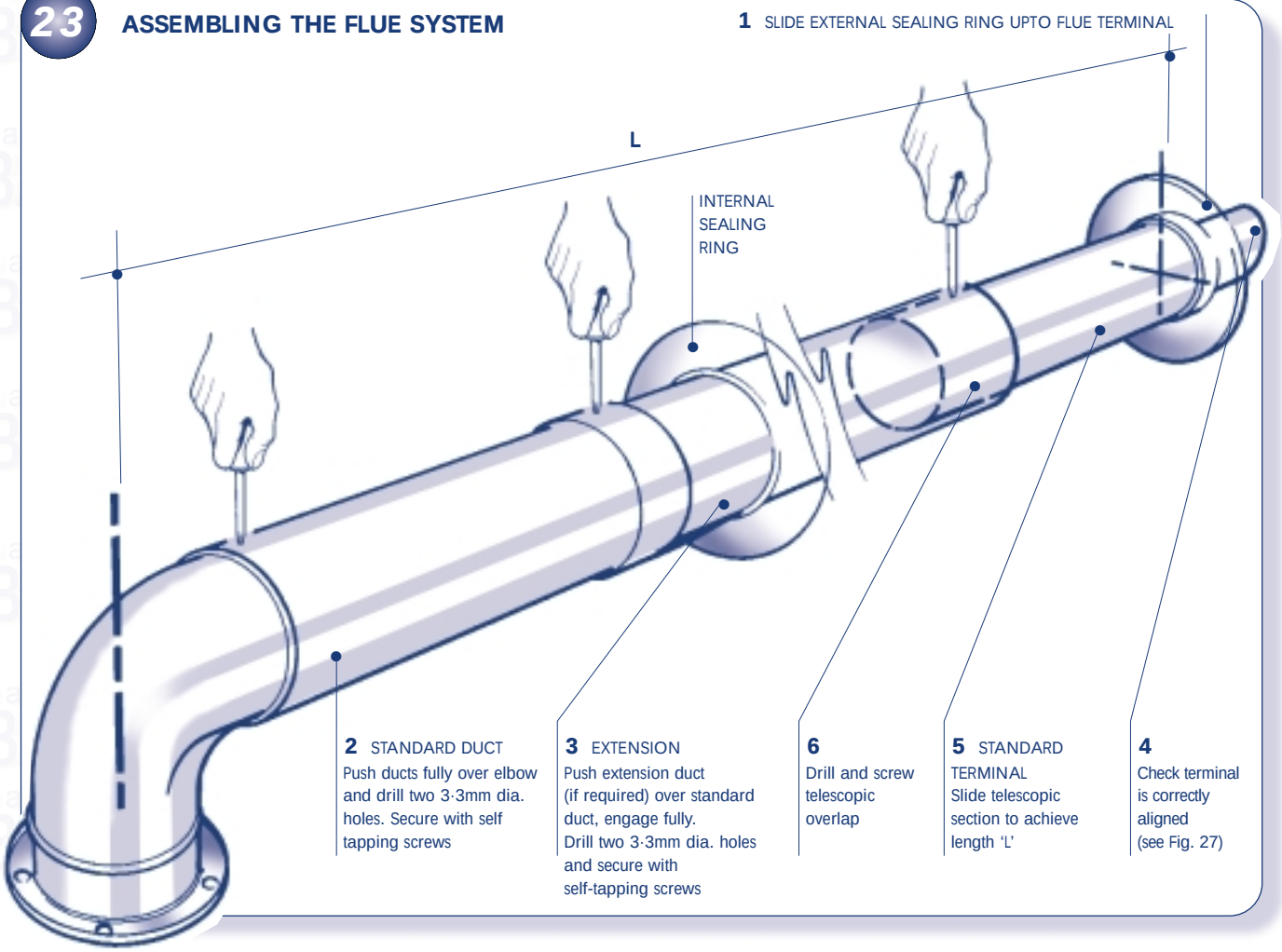

4.7.2 AIR GUIDE

An air guide is supplied with the appliance for use with right and left hand side outlet horizontal flues – see Figure 24.

If a rear horizontal or vertical outlet flue is to be used, discard the air guide and use only one of the gaskets and proceed to section 4.7.3.

In all other cases, fit the air guide under the flue elbow as shown in Figure 25, ensuring that it is the correct way round. Two gaskets are supplied, one should be fitted either side of the air guide to provide a good seal.

NOTES

(i) Failure to fit the air guide when installing the appliance with the appropriate flue system will not provide optimum appliance performance.

(ii) Fitting the air guide on a rear outlet horizontal flue system will adversely affect performance and may constitute a safety hazard.

(iii) Failure to comply with these instructions will invalidate the appliance Certification and therefore may contravene the appropriate EC legislation and local statutory requirements.

24 AIR GUIDE LOCATION

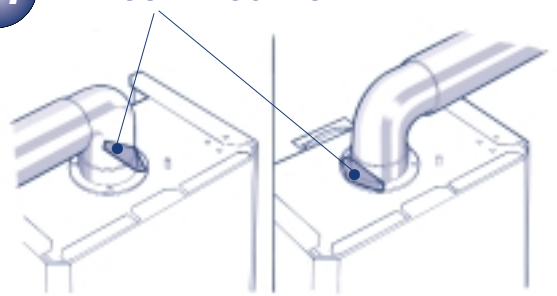

25 FITTING THE AIR GUIDE

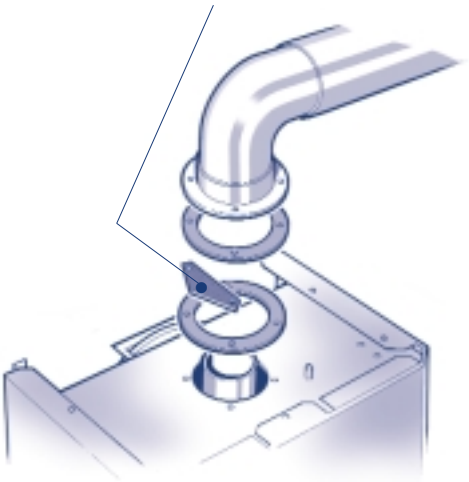

4.7.3 INSTALLING THE AIR/FLUE DUCT FROM INSIDE THE ROOM

Wall thickness up to 800 mm (31in) only.

a) Push the terminal through the wall liner taking care to ensure that the terminal is the correct way round and the external wall sealing ring does not become dislodged.

b) Pull the flue system towards the boiler to seat the external sealing ring against the outside wall and secure the elbow to the boiler using the four screws provided.

c) Finally use the internal sealing ring to make good the internal hole, and check that the terminal is correctly located on the outside wall (Where possible this should be visually checked from outside the building).

Figure 26 shows a view of the flue system correctly installed.

d) Assemble as shown in Figure 26.

26 INSTALLING THE FLUE SYSTEM FROM INSIDE THE ROOM

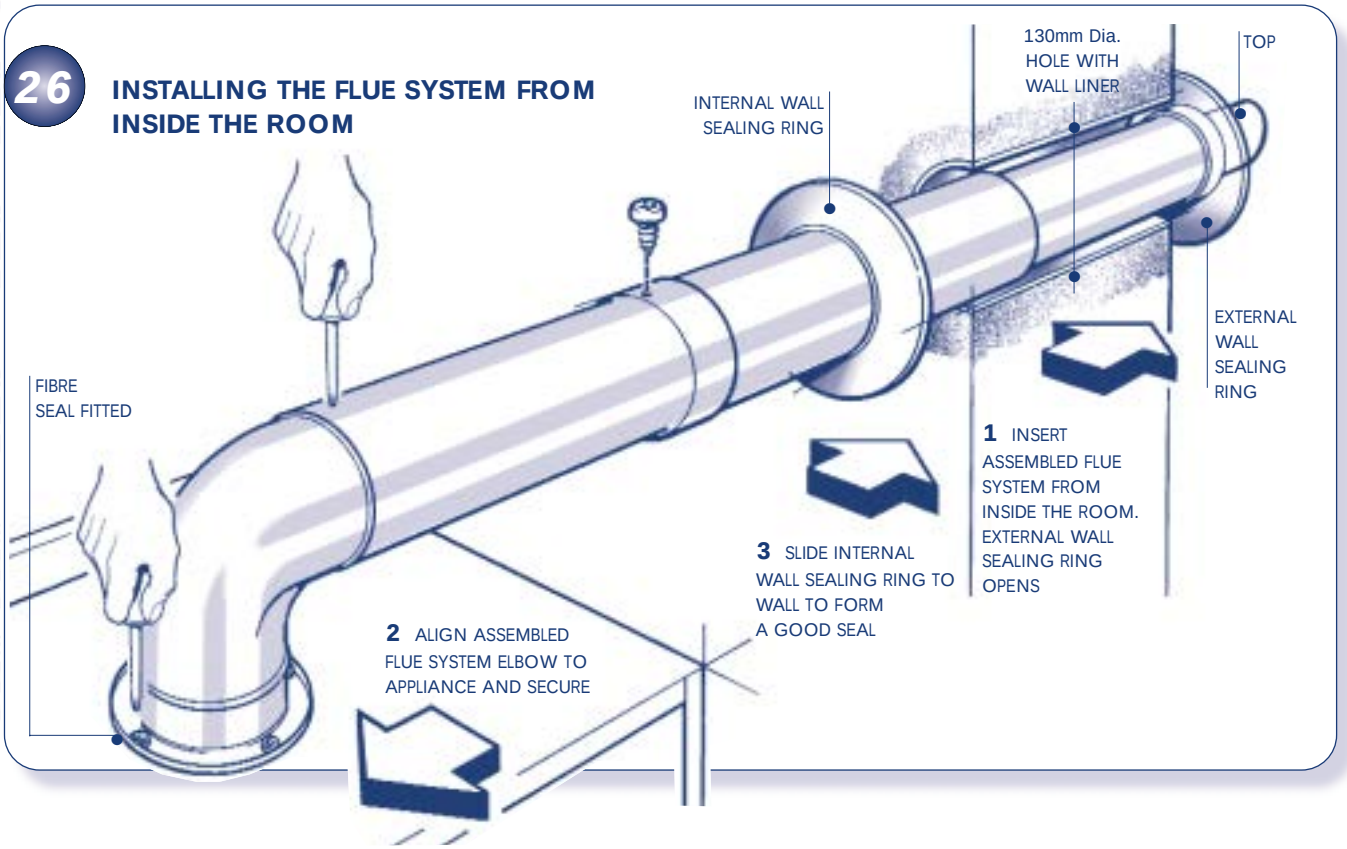

4.7.4 INSTALLING THE AIR/FLUE DUCT FROM OUTSIDE THE BUILDING

(Flue hole diameter 100mm - wall liner not necessary)

a) Secure the flue elbow with seals and flue adaptor (where necessary) to the appliance using the 4 screws provided.

b) Fit external wall sealing ring over flue and then from outside the building, push the flue system through the wall taking care to ensure that the terminal is the correct way around.

c) Fit the internal wall sealing ring over the inside end of the flue, then fit the air duct to the elbow, drill and secure with the two screws.

d) Pull the flue system towards the boiler to seat the external sealing ring against the outside wall and secure the air duct to the elbow using the two screws provided.

e) Finally use the internal sealing ring to make good the internal hole. Check that the external wall sealing ring is correctly located, on the outside wall from outside the building.

Figure 27 shows a view of the flue system, correctly installed.

27 INSTALLING THE FLUE SYSTEM FROM OUTSIDE THE BUILDING

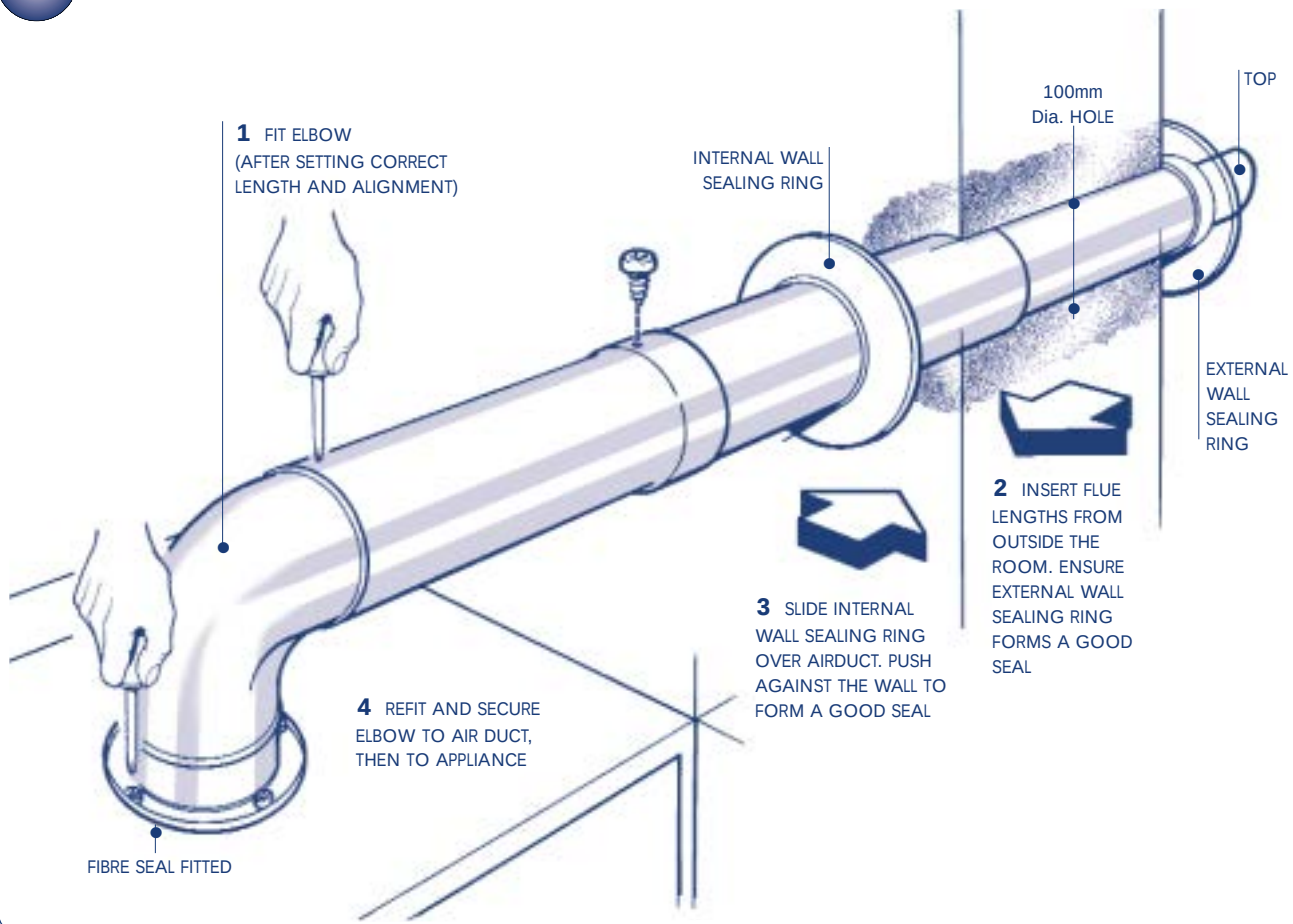

4.8 WIRING INSTRUCTIONS

Connect the electricy supply and external controls (using suitable mains cable) as follows:

Wire the cable(s) into the appropriate connections in the electrical plug provided (Figure 28). Live supply to L2, Neutral and Earth as indicated. Check that L1 and L3 are linked.

To provide correct cable retention, fit the piece of tubing supplied over the cable as it passes through the clamping arrangement. The cable will be held in position as the plug cover is fitted.

If a room thermostat is to be fitted remove the red link between L1 and L3 and connect the thermostat across these terminals. Any external controls fitted must be rated at 230V 50Hz and have volt-free contacts.

NOTE: ***Assuming that the appliance is to be commissioned immediately after installation it is not necessary to fit the casing panels at this stage.***

28 ELECTRICAL CONNECTIONS (rear view)

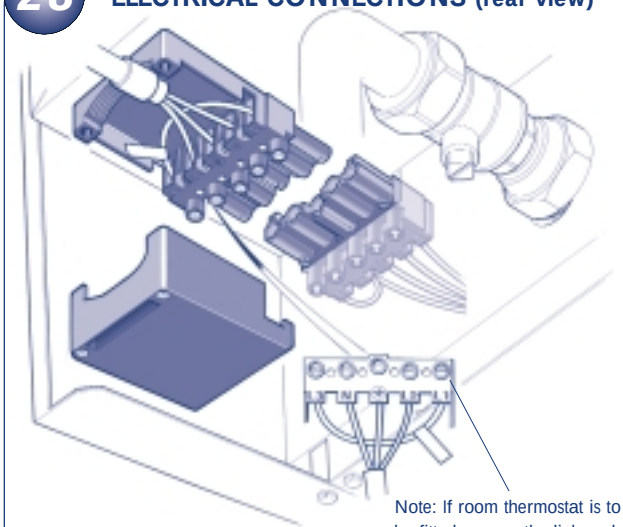

5 COMMISSIONING AND TESTING

Before commissioning the appliance, the whole gas installation including the meter MUST be purged and tested for gas soundness in accordance with BS 6891:1988.

IMPORTANT: ***Open all doors and windows, extinguish naked lights, and DO NOT SMOKE whilst purging the gas line.***

Before commencing the commissioning procedure, ensure that the gas service cock is turned on, the electricity supply is isolated, and that the DHW and CH pipe work is complete.

5.1 FILLING THE WATER SYSTEMS

Fill the water systems by following the procedure detailed below Fig 29, steps 1 to 9.

29 VALVE POSITIONS FOR COMMISSIONING THE WATER SYSTEM (rear view)

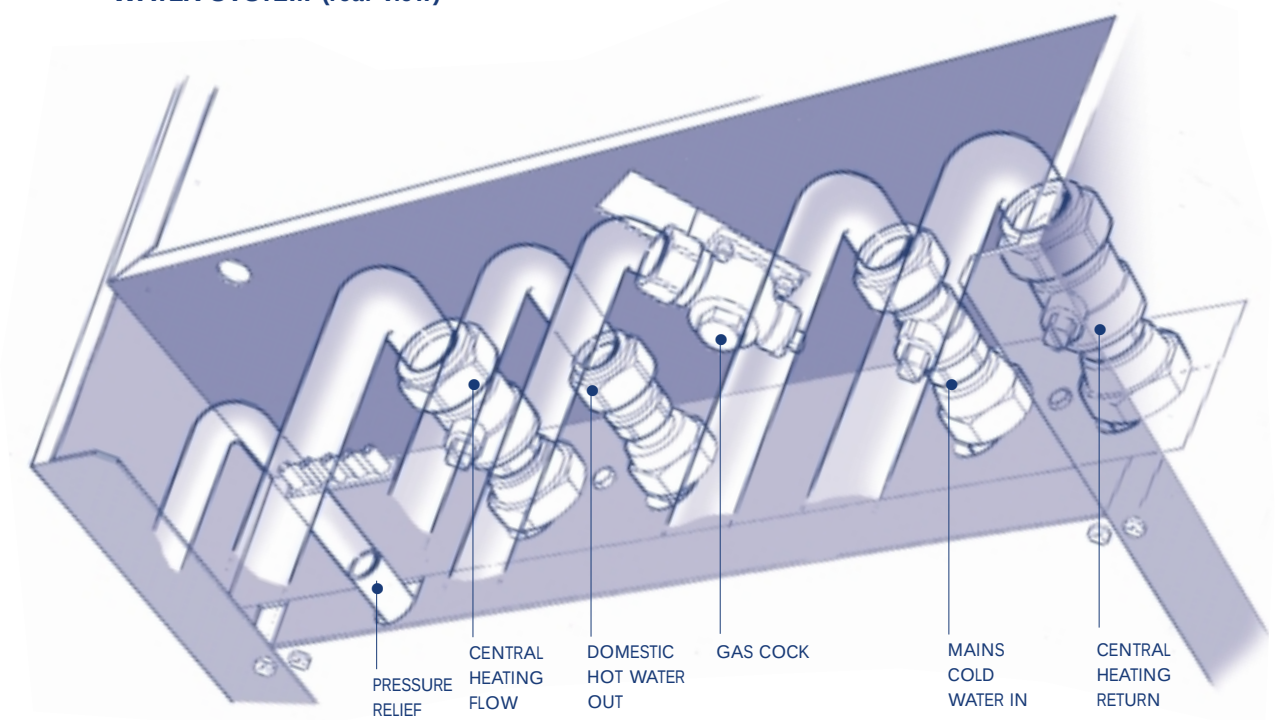

1. Check that the CH flow and return valves are in the open position.
2. Fill the system with water using one of the approved methods described in section 3.6 to about 2.0 bar. Vent the system via the radiator valves and system air vents in accordance with normal practice. Ensure that all system air vents are closed.
3. Check the system for soundness.
4. Check the operation of the pressure relief valve (Fig. 32) by rotating the plastic head anticlockwise 1/4 of a turn and checking that water is discharged. Ensure that the valve seats correctly and does not leak. If the valve leaks or is stuck closed, replace it..
5. Drain the entire system to flush out any debris, and refill to 0.2 bar above the system design pressure (between 0.5 and 1.5 bar) by repeating the above procedure. Follow the commissioning procedure described below, then repeat this instruction with the system hot. It is recommended that the system is cleaned with a recognised system cleaner such as Fernox or Sentinel.
6. Open the DHW inlet valve and open and close each hot water tap in turn to clear all the air from the pipes and the boiler.
7. Remove the pump end cap and rotate the rotor, replace the cap.
8. If filling loop is used, disconnect filling loop.
9. Prior to firing up the boiler to check the gas rates, the Central Heating and Boiler system should be checked for circulation by running the boiler and pump with gas turned off, to ensure no air locks occur.

5.2 COMMISSIONING THE APPLIANCE

a) Loosen the screw and connect a manometer to the burner pressure test point on the gas valve (Fig. 35).

b) Turn the hot water control (Fig. 30) to maximum (fully clockwise). Turn on the electrical supply and select the Hot Water position on the Main Switch – the Power On LED will be illuminated.

c) Fully open any DHW tap and the ignition sequence will commence. The Hot Water and the Burner On LEDs will be illuminated. If the burner fails to light, ignition lock-out occurs. In the event of ignition Lock-out the safety Lock-out LED will be illuminated. To re-set the appliance and initiate a further ignition attempt it is necessary to turn the Main Switch through to the Reset position (spring return).

d) After ignition, allow the boiler to run for at least 10 minutes and check that the burner pressure is as stated on the data badge ±10%. The DHW burner pressure is factory set and should not require adjusting. If the burner pressure is low, check that the appliance has not started to modulate (This will occur if the DHW flow rate is low. If modulation is suspected, open all DHW taps to maximise flow and re-check burner pressure) If it is necessary to adjust the DHW burner pressure the method is described in section 9.6 Gas valve replacement.

e) Close the DHW tap and ensure that the Burner On LED (Fig. 30) goes off, the burner goes out, and the pump stops after an overrun period.

f) Ensure that the room thermostat (if fitted) is calling for heat. Turn the Main Switch to Heating & Water and turn the heating control knob (Fig. 30) to maximum (fully clockwise), and finally turn the clock override switch (Fig. 30) to the I position. The burner will light.

30 FASCIA PANEL AND CONTROLS

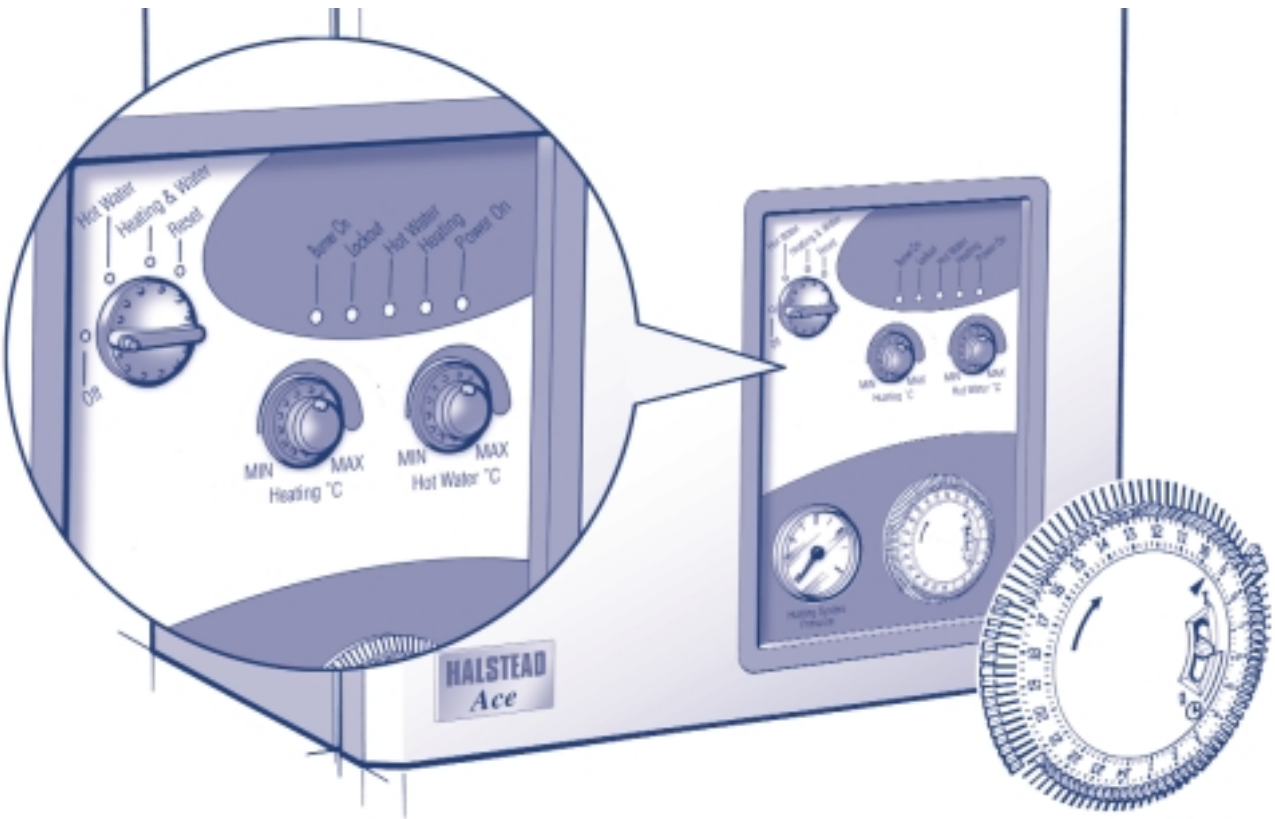

NOTE: ***that the central heating burner pressure is factory set to 6.3 mbar (app. 19.5kW or 66,000 Btu/h, gross heat input) and should not require adjusting. If it is necessary to adjust the CH burner pressure the method is described in section 9.9.1 Gas valve replacement.***

g) Set the clock to the desired times by setting the tabs.

h) Slide the clock override switch to the 'timed' position and check the operation of the clock and room thermostat (If fitted).

5.3 DOMESTIC HOT WATER FLOWRATE

A flow regulator is supplied factory fitted to the appliance to ensure that no adjustment is necessary. Should the mains flow rate be below the minimum required it is possible to remove the flow regulator from the appliance as instructed in section 9 (Fig. 37).

5.4 FINAL CHECKS

a) Turn the appliance off and remove the manometer and tighten the burner pressure test point screw. Re-light burner and test for gas soundness.

b) Fit the boiler casing as described and illustrated in Figure 31: Fit each side panel (both are identical) with two screws at the top and bottom of each panel. Fit the front panel in position and locate by gently sliding it downwards over the supporting tabs. Screw into position using the single fixing screw at the top of the casing.

c) Set the heating and hot water controls (Fig. 30) to the required settings. Ensure that the clock override switch is in the timed position, and check that the time clock is set at the desired time periods. Set the room thermostat (if fitted) to the required setting.

5.5 IGNITION LOCKOUT

In the event of an ignition failure, the safety lockout LED will be illuminated. To re-set, turn the main switch through to the Reset position (spring return).

5.6 OVERHEAT THERMOSTAT

This appliance is fitted with an overheat thermostat. In the event of overheating, the appliance will shut down and the safety lockout LED will light. If an overheat condition occurs, allow the appliance to cool, then press the overheat reset button once (located underneath the appliance at the left hand side). The Ignition safety lockout LED will also be illuminated and require re-setting. To re-set, turn the main switch through to the Reset position (spring return).

31 FITTING THE CASING PANELS

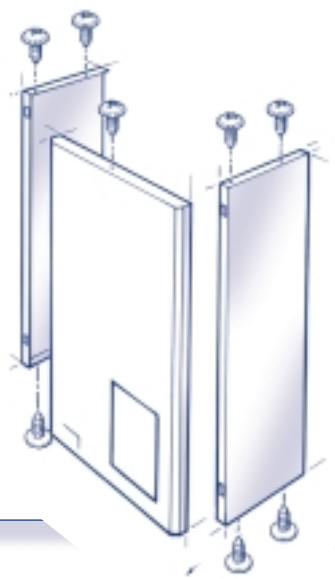

5.7 FROST PROTECTION

This appliance is fitted with a frost protection device. In the event of very cold conditions the pump may operate and the boiler may light for a few minutes to protect the appliance and system from potential frost damage. This can only function if the gas and electricity supplies are maintained and the main switch on the appliance is left either in the Hot Water or Heating & Water mode. The clock can be switched to the off setting.

5.8 OTHER FEATURES

The following additional features are included in the appliance specification:

ANTI-CYCLE DEVICE: When the appliance cycles on it's central heating control setting, a slow cycle device operates. The timer (set to 3 mins) is activated after the end of burn cycle to prevent rapid cycling of the burner.

ANTI PUMP SEIZURE DEVICE:

Providing that a power supply is maintained and the Main Switch is either in the Hot Water or Heating & Water mode, the pump will operate for at least 20 seconds every 23 hours (regardless of heat demand) to prevent pump seizure during periods where the appliance is not used.

WATER FLOW SWITCH:

This device prevents the burner from firing if there is inadequate water flow through the main heat exchanger.

5.9 USERS INSTRUCTIONS

Upon completion of commissioning and testing the system, the installer should draw the user's attention to the following.

a) Give the 'Users Instructions' to the householder and emphasise their responsibilities under the 'Gas Safety (Installation and Use) Regulations 1996' (as amended).

a) Explain and demonstrate the lighting and shutdown procedures.

b) Advise the householder on the efficient use of the system, including the use and adjustment of all system controls for both DHW and CH.

c) Advise the user of the precautions necessary to prevent damage to the system, and to the building, in the event of the system remaining inoperative during frost conditions.

d) Explain the function of the boiler overheat thermostat, and how to re-set it. Emphasise that if cut-out persists, the boiler should be turned off and the installer or service engineer consulted.

e) Stress the importance of an annual service by a registered heating engineer.

f) The electrical mains supply to the appliance must remain ON and the Main Switch must left either in the Hot Water or Heating & Water mode for the frost protection circuit to operate.

5.10 BOILER LOGBOOK

A logbook is supplied with this appliance to record installation and commissioning details and make future servicing of the appliance easier.

This logbook forms part of the industry's Benchmark code of practice for the installation, commissioning and servicing of central heating systems.

Please ensure that the logbook is fully completed and left with the customer for future reference along with Users Instructions and this Installation and Servicing Instruction manual.

6 ROUTINE SERVICING

To ensure continued efficient operation of the appliance, it is recommended that it is checked and serviced as necessary at regular intervals. The frequency of servicing will depend upon the particular installation conditions and usage but in general once a year should be adequate. It is the law that any service work must be carried out by a competent person, such as British Gas or other CORGI registered personnel.

The boiler incorporates a flue sampling point on the top panel in front of the flue outlet. If the service engineer has suitable equipment to analyse the flue gas, the plastic cap may be removed and a 6mm inside diameter sample tube fitted. Do not forget to replace the plastic cap after use.

Before commencing any service operation, ISOLATE the mains electrical supply, and TURN OFF the gas supply at the main service cock.

Service the appliance by following the full procedure detailed below:

6.1 MAIN BURNER ASSEMBLY

a) Remove the casing front panel by unscrewing the panel retaining screw and lifting off the panel.

b) Remove the sealed chamber front panel (4 screws).

c) Remove the nut securing the burner locating guide and burner earth wire.

d) Remove the combustion chamber front panel (7 screws). Take care not to damage the insulation.

Do not attempt to light boiler with Front Panel removed.

e) Unscrew and remove the two screws securing the fascia panel in the upright position and pivot the panel forwards.

f) Remove the two electrode leads from the rear of the pcb and unclip the grommet in the bulkhead below the burner to release the earth, ignition, and detection wires.

g) Remove the burner by sliding it forwards with reference to Figure 33.

h) Inspect and if necessary clean the main burner ports using a soft brush or vacuum cleaner. Do not use a wire brush or any abrasive material.

6.2 BURNER INJECTOR

Check that the main injector is free from dirt and debris. If necessary clean the injector orifice using a soft brush or vacuum cleaner. Do not use a wire brush or any abrasive material. It is not necessary to remove the injector unless there is evidence of debris inside the orifice.

6.3 IGNITION AND DETECTION ELECTRODES

a) Inspect the ignition and detection electrodes in situ. If necessary clean using a soft brush. If either the electrode or the ceramic insulation show signs of damage or wear, replace the electrode(s).

b) Check that the alignment of the ignition and detection electrodes are as shown in Figure 34. Adjust by carefully bending the tip of the electrode rod whilst supporting the base of the rod. Do not put any pressure on the ceramic insulation.

6.4 FAN ASSEMBLY

a) Carefully disconnect the tab connectors on the fan wiring from the fan.

b) Disconnect the air pressure switch sensing pipes from the fan, noting their positions

c) Remove the fan assembly by unscrewing the two screws, lowering the assembly and lifting it forwards.

32 LOCATION OF SERVICEABLE COMPONENTS

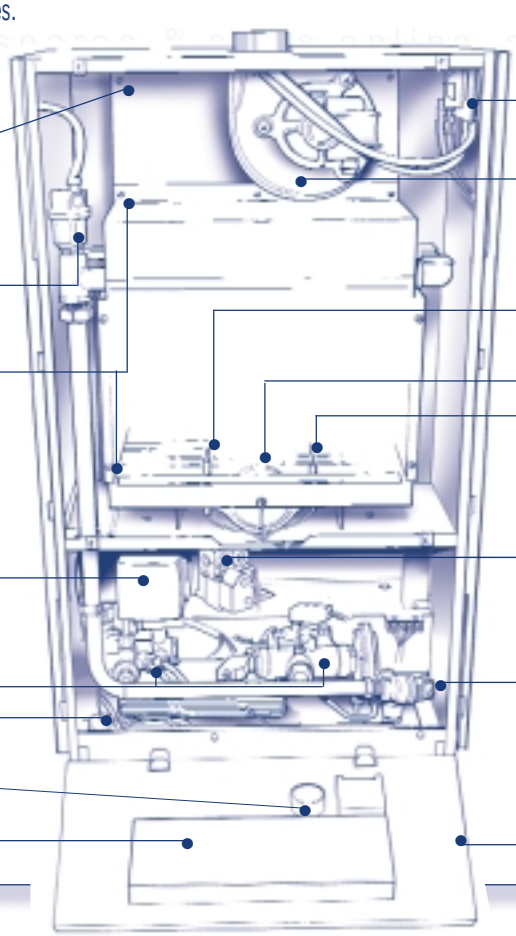

d) Inspect the fan assembly (especially the impeller and the venturi) for dirt, damage, or signs of wear. If necessary clean the impeller or/and venturi using a soft brush or vacuum cleaner. Spin the impeller and check that it rotates freely, without noise, and without imbalance. If there is any sign of deterioration or damage, replace the fan.

6.5 AIR PRESSURE SWITCH PIPES

Check that the pressure switch sensing pipes are not blocked or damaged. It is not necessary to remove the air pressure switch, this is not adjustable and does not require any servicing.

33 BURNER REMOVAL

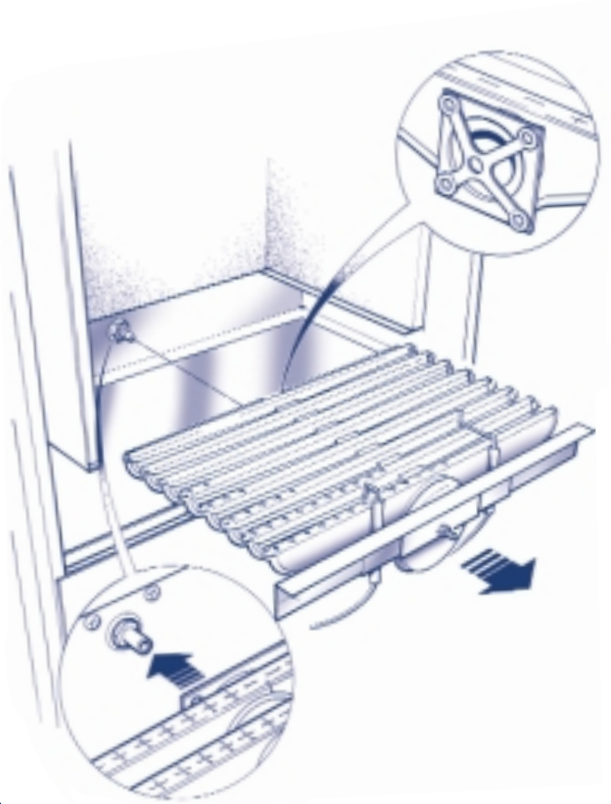

34 ELECTRODE ALIGNMENT

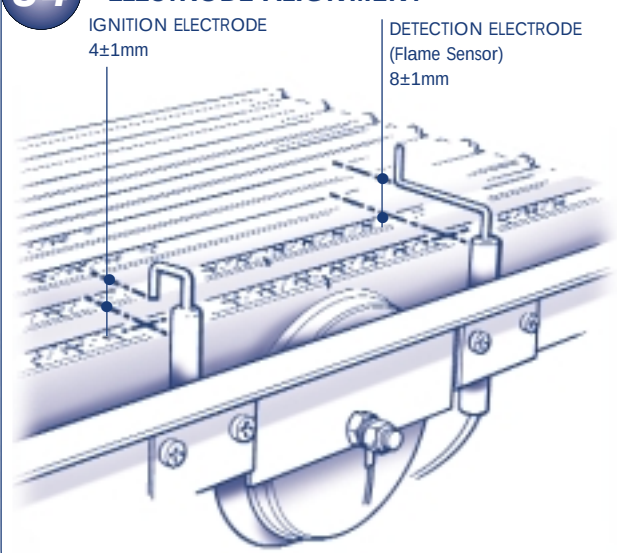

6.6 HEAT EXCHANGER

a) Inspect the heat exchanger from both above and below the fins. If necessary, clean the fins with a soft, non metallic brush.

6.7 GENERAL

a) Check that the combustion chamber insulation is not damaged.

b) Clean the inside of the sealed chamber using a soft brush or (preferably) a vacuum cleaner.

c) Check that the sealed chamber front panel seal is intact and in good condition. Replace if necessary.

d) **Always wear a protective mask when cleaning the appliance.**

6.8 RE-ASSEMBLY

Re-assemble all components in reverse order except do not pivot the fascia panel back into position or fit the casing front panel until the servicing work has been completed.

When re-fitting the burner it is essential to ensure that the burner is level as shown in Figure 33 and that it is correctly assembled into the injector.

Check that all joints and seals are correctly fitted. Note that fan polarity is immaterial.

6.9 RE-COMMISSIONING

a) Loosen the screw at the burner pressure test point and connect a pressure gauge to this point (Fig. 35). Turn on the gas and electricity supply and light the boiler as described in section 5.2

b) Check the operation of the appliance in both central heating and DHW modes and ensure that the DHW maximum and minimum burner pressures after ten minutes running are as stated on the data badge.

c) Remove the pressure gauge and tighten the sealing screw.

Re-light the appliance and test for gas soundness.

6.10 SEALED WATER SYSTEMS

a) Check the operation of the pressure relief valve as described in section 5.1.

b) Check the correct operation of the pressure gauge by noting the reading when cold and check that the pressure increases with temperature. Replace the gauge if readings are suspect.

c) Check that the system is at it's original (cold) design pressure (indicated by the pointer on the pressure gauge). If necessary, re-pressurise the system as described in section 5.1 and search for and rectify any leaks causing loss of water.

6.11 FINAL CHECKS

a) Pivot the fascia panel into the upright position and secure with the two screws, then re-fit the front casing panel (Fig. 31).

b) Return all appliance and external controls (if fitted) to their original settings.

7.1 : FUNCTIONAL FLOW WIRING DIAGRAM

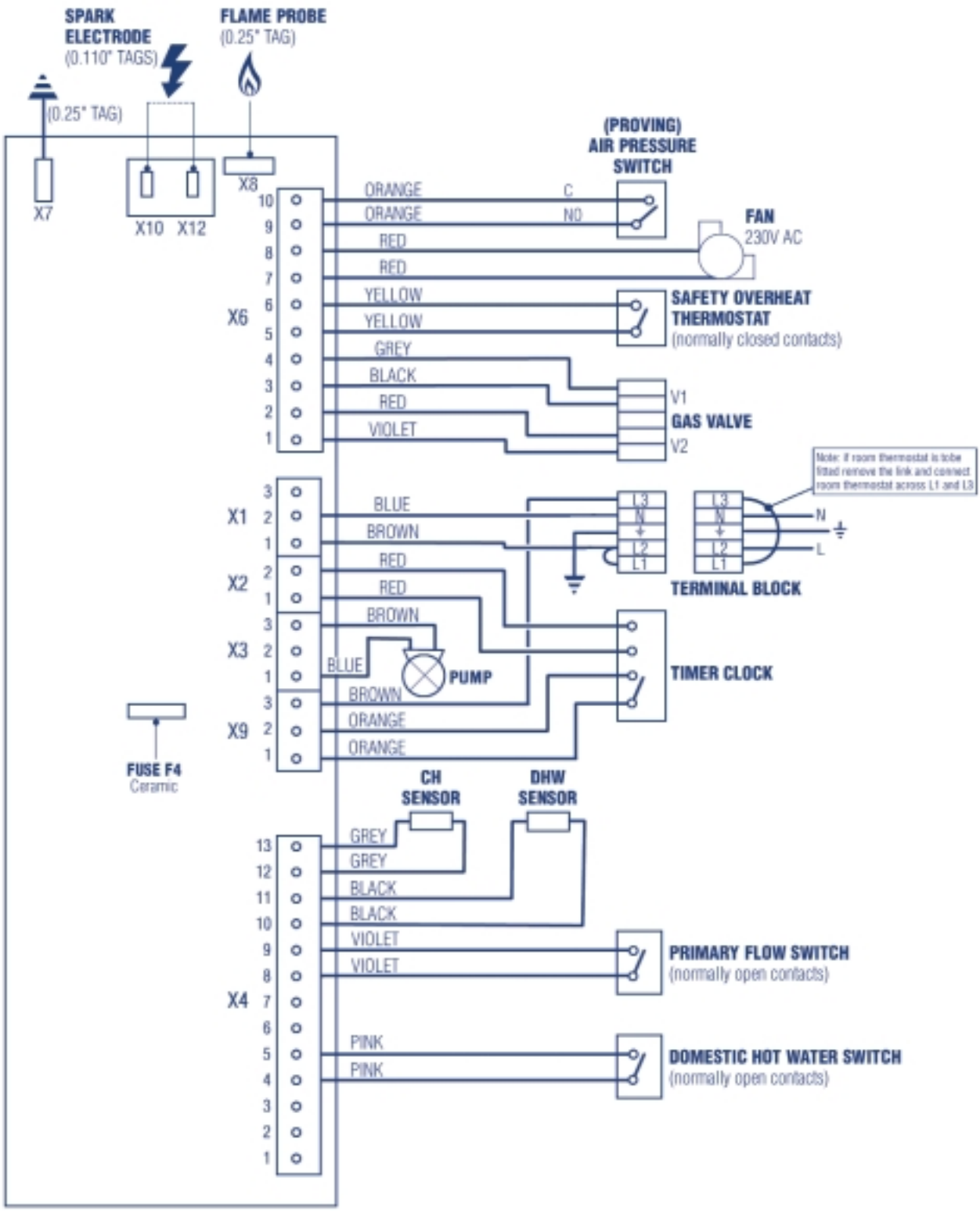

7.2 : ILLUSTRATED WIRING DIAGRAM

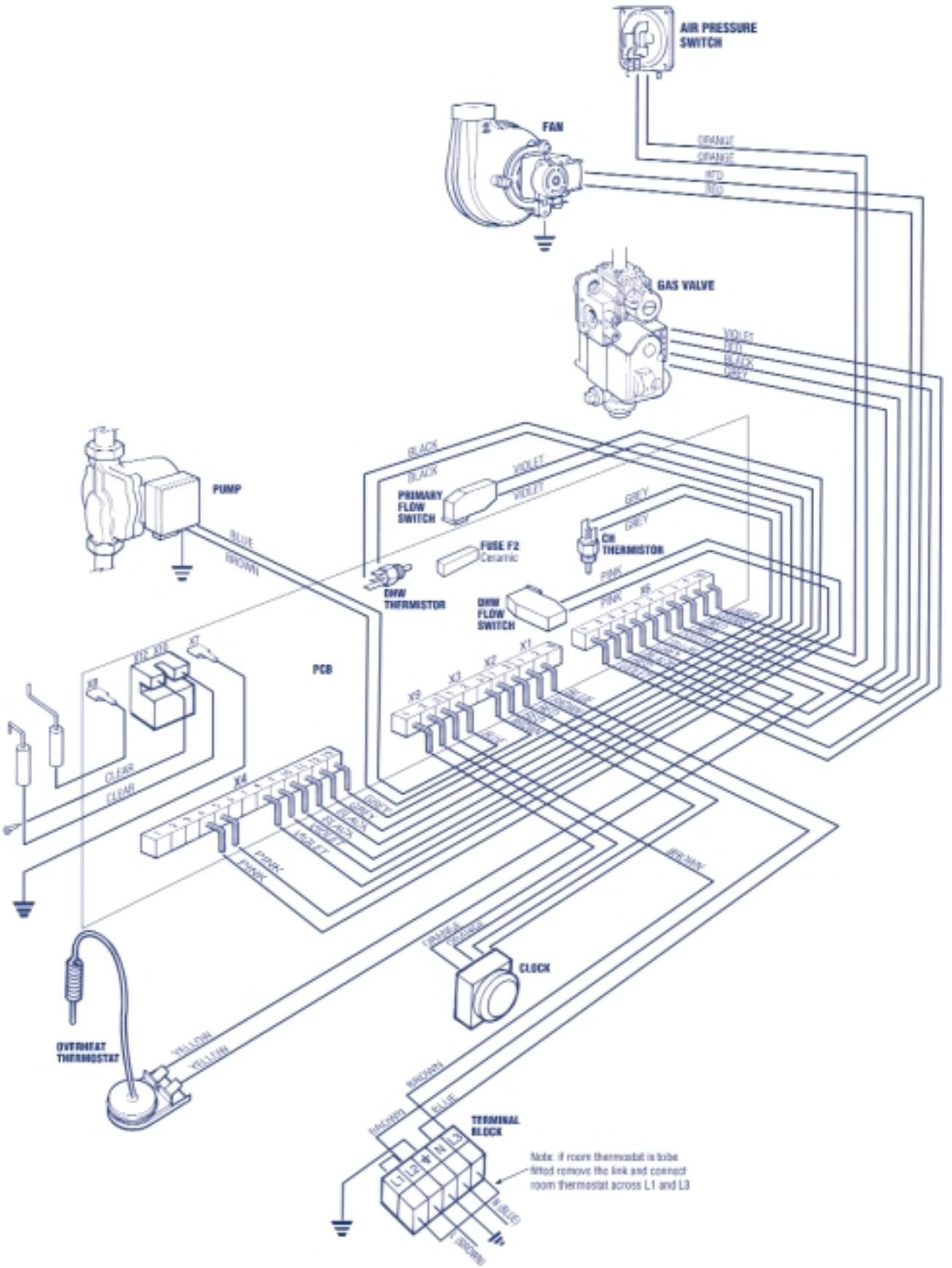

8 FAULT FINDING

8.1 GENERAL

Before looking for a fault condition, check that:

The mains electrical supply is turned on.

The clock and / or room thermostat (if fitted) are calling for heat (CH 'faults' only)

The gas service cock is open.

The DHW and CH isolation cocks are open.

The system is at design pressure.

Before attempting any electrical fault finding, always conduct the preliminary electrical system checks as described in the Instructions for the British Gas Multimeter or other similar instrument.

On completion of any service or fault finding operation involving making or breaking electrical connections always check for EARTH CONTINUITY, POLARITY, and RESISTANCE TO EARTH.

Detailed procedures for replacing faulty components are described in section 9 (Parts Replacement)

8.2 DIAGNOSTIC INDICATOR LED'S

The LEDs on the fascia panel (Fig. 30) show the status of the boiler as described below:

Power ON LED illuminated. (Green): Boiler is in service. If no other LEDs are illuminated, the appliance is awaiting a demand for heating or hot water.

Burner ON LED illuminated (Green): Burner is alight.

Hot Water LED illuminated (Green): Boiler is in DHW mode.

Heating LED illuminated (Green): Boiler is in Heating mode.

Safety Lockout LED illuminated (Red): Burner has failed to light and gone to ignition lock-out and possibly overheat cut-out. Re-set the appliance by turning the mains switch through to the Reset position (spring return) and if necessary, re-set the button on the overheat thermostat (left hand underside of casing).

NOTE: There may be a fault condition preventing ongoing operation of the appliance. Follow fault finding procedure.

8.3 IGNITION FAULTS

In the event of the boiler failing to light, investigate the problem by following the flow chart.

8.4 DHW FAULT FINDING

When the hot water tap is turned on, the controls should carry out a set of start up checks (flow chart 1) followed by an ignition sequence (flow chart 2)

If the control has powered up correctly but does not respond to a DHW demand, investigate in the following order:

Check for 0V d.c. across pins 10 and 11 on X4. If 5V is present across pins 10 and 11 check water flow switch and wiring.

If 0V is present, check DHW thermistor and wiring. If DHW thermistor and wiring are OK, replace PCB.

8.5 CENTRAL HEATING FAULT FINDING

Upon a demand for Central Heating, (closure of the time switch and room thermostat if fitted) the appliance should respond to the demand.

If the control does not respond to a CH demand, investigate in the following order:

If 230 Va.c. is present across pins 1 and 2 on X1 but no start up procedure occurs ensure that the control is not in anti-cycle mode by removing power from the control and restoring it after a delay of 10 seconds, or open a hot water tap for a few seconds.

If the control still does not carry out start up checks, check CH thermistor (pins 12 and 13 on X4) and wiring.

If CH thermistor and wiring are okay, replace PCB.

NOTE: Whenever a CH demand is removed, either by the timer, the room thermostat or the boiler internal temperature control, an anti cycle mode is initiated which prevents the boiler firing in CH mode for 3 minutes.

FLOW CHART 1: START/POWER UP FAULT FINDING

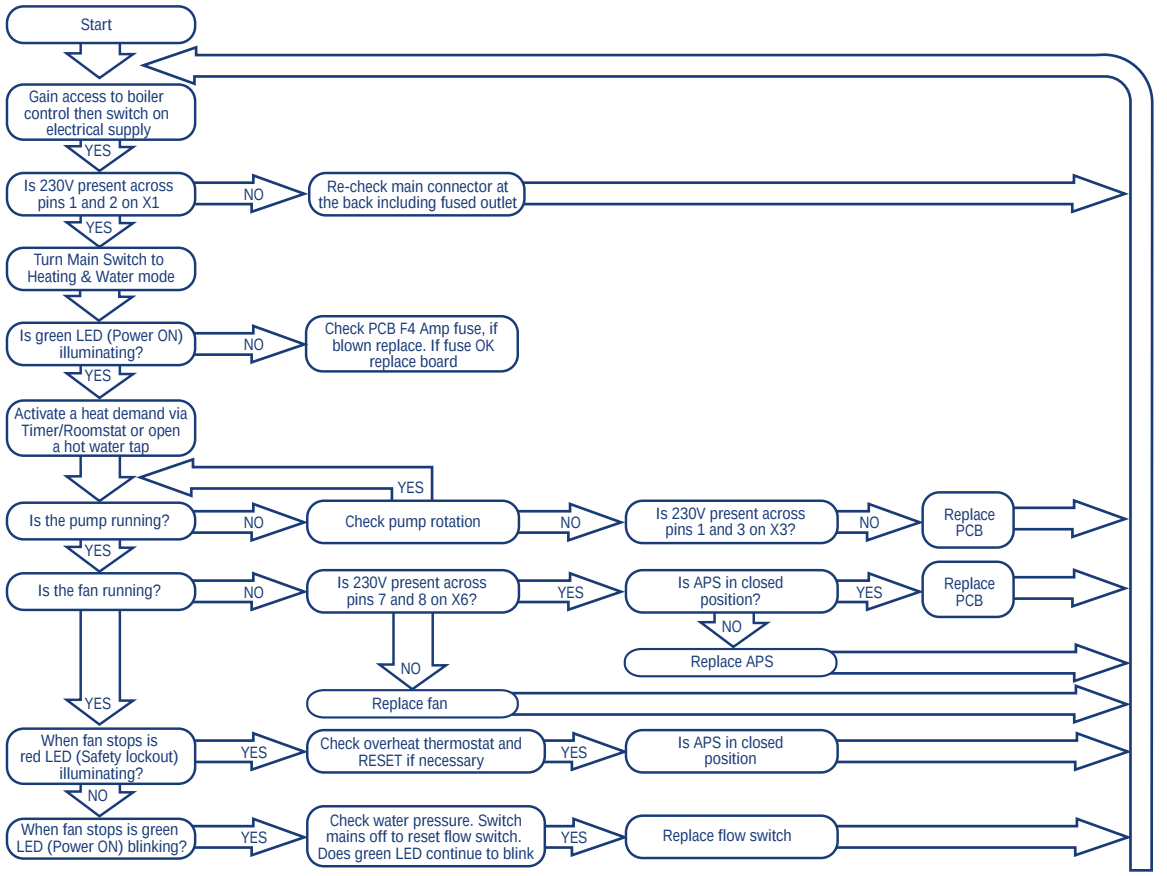

FLOW CHART 2: IGNITION SYSTEM FAULT FINDING

Note: An anti-cycle timer is built into the control system. If the appliance does not light, wait a minimum of three minutes before restarting the boiler.

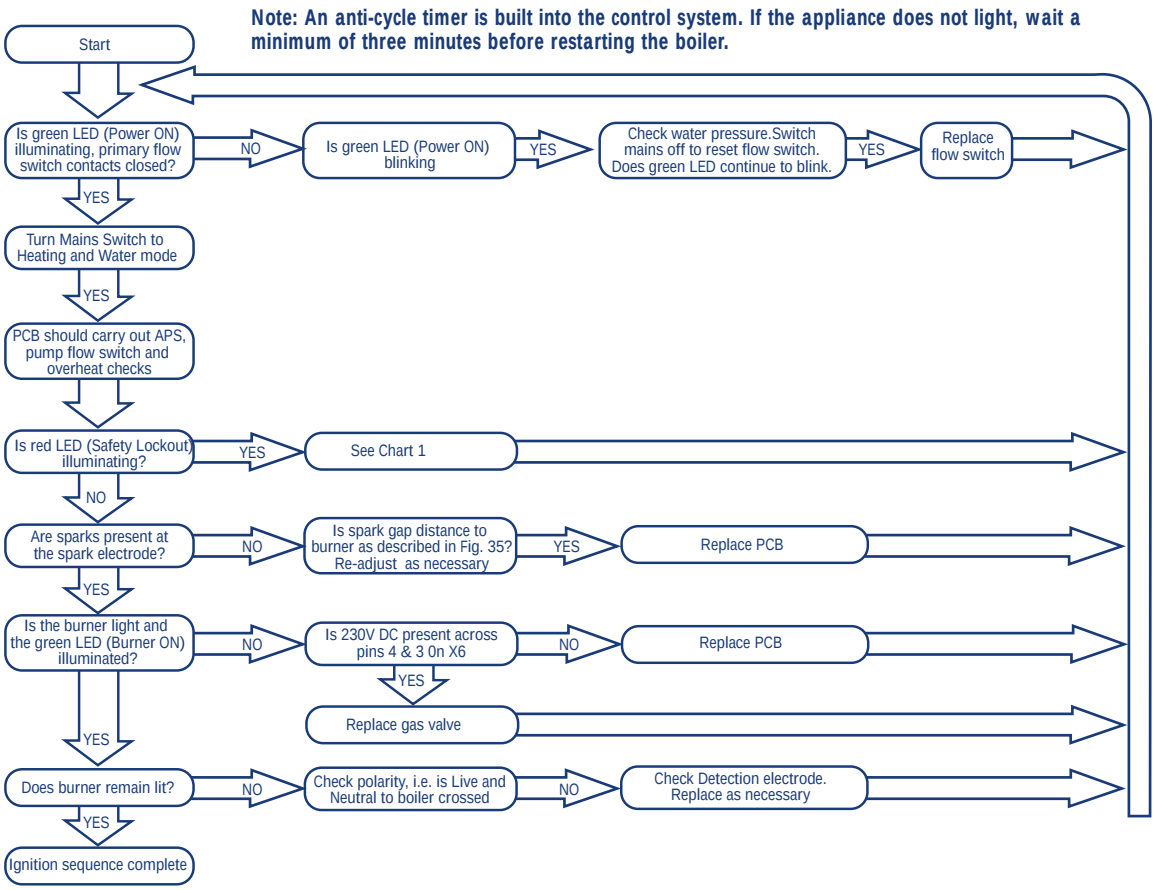

9 REPLACEMENT OF PARTS

Before commencing any service operation, ISOLATE the mains electrical supply, and TURN OFF the gas supply at the main service cock.

It is the law that any service work must be carried out by a registered person.

9.1 HEAT EXCHANGER

a) Remove the casing front panel by unscrewing the retaining screw (on top of panel) and lifting off the casing panel.

b) Remove the sealed chamber front panel (4 screws).

c) Remove the nut securing the burner to the burner locating bracket (and burner earth wire).

d) Remove the combustion chamber front panel and burner locating bracket (7 screws). Take care not to damage the insulation.

e) Unscrew and remove the two screws securing the fascia panel in the upright position and pivot the control panel forwards.

f) Remove the two electrode leads from the rear of the pcb and unclip the grommet in the bulkhead below the burner to release the earth, ignition, and detection wires.

g) Remove the burner by sliding it forwards with reference to Figure 34.

h) Turn the CH flow and return valves to the closed position to isolate the boiler. Drain the appliance.

i) Carefully remove the LH combustion chamber insulation panel, the clip must first be removed from the rear LH lower corner of the combustion chamber, to reveal an access hole to the heat exchanger union connections.

j) Using a suitable spanner, unscrew the heat exchanger connections from inside the combustion chamber.

k) Lift the heat exchanger clear of the two pipes, then remove the heat exchanger by sliding it forwards.

l) Replace the heat exchanger and re-assemble in reverse order. Ensure that all joints and seals are correctly re-fitted and re-commission the system using the procedure in section 5.1.

9.2 COMBUSTION CHAMBER INSULATION

The design of the appliance is such that the combustion chamber insulation should not require replacement unless mechanically damaged. It is recommended that the insulation is dampened prior to removal to prevent dust.

a) To replace the combustion chamber insulation front panel remove the front panel as described in section 9.1 steps (a) to (c) and replace the insulation.

b) To replace the combustion chamber insulation side and rear panels remove the heat exchanger as described in section 9.1 and replace the insulation.

c) Re-assemble in reverse order. Ensure that all joints and seals are correctly re-fitted and re-commission the system (if necessary) using the procedure in section 5.1.

It is recommended that a protective mask is worn when changing or handling the insulation material.

9.3 FAN ASSEMBLY

a) Gain access to the fan assembly by following section 9.1 steps (a) to (d).

b) Carefully disconnect the tab connectors on the fan wiring.

c) Disconnect the air pressure switch sensing pipes from the fan, noting their position.

d) Remove the fan assembly by unscrewing the two screws, lowering the assembly and lifting it forwards.

e) Replace the fan assembly and re-assemble in reverse order. Ensure that all joints and seals are correctly re-fitted. (Polarity is immaterial on the fan connections.)

9.4 BURNER

a) Remove the burner as described in section 9.1 steps (a) to (g).

b) Transfer the ignition and detection electrodes to the new burner and check that their alignment is as detailed in figure 34.

c) Replace the burner (with reference to figure 33) and re-assemble in reverse order. Ensure that all joints and seals are correctly re-fitted.

9.5 IGNITION & DETECTION ELECTRODES

a) Remove the burner as described in section 9.1 steps (a) to (g).

b) Replace the ignition and /or detection electrode(s) and check that both electrodes are aligned as detailed in figure 34. Re-assemble in reverse order. Ensure that all joints and seals are correctly re-fitted.

9.6 MULTIFUNCTIONAL GAS CONTROL

9.6.1 GAS CONTROL REPLACEMENT

a) Remove the casing front panel (as described in section 9.1 step (a) and lower the controls fascia panel after removing the two retaining screws.

b) Carefully pull off the electrical connector plug from the multifunctional gas control (Fig. 35)

c) Check that the gas service cock is turned off, and unscrew the union on the gas cock followed by the four screws securing the inlet flange of the gas control

d) Remove the four screws securing the outlet flange to the gas control.

e) Replace the multifunctional gas control and reassemble in reverse order ensuring that the 'O' rings are correctly fitted.

35 MULTIFUNCTIONAL GAS CONTROL

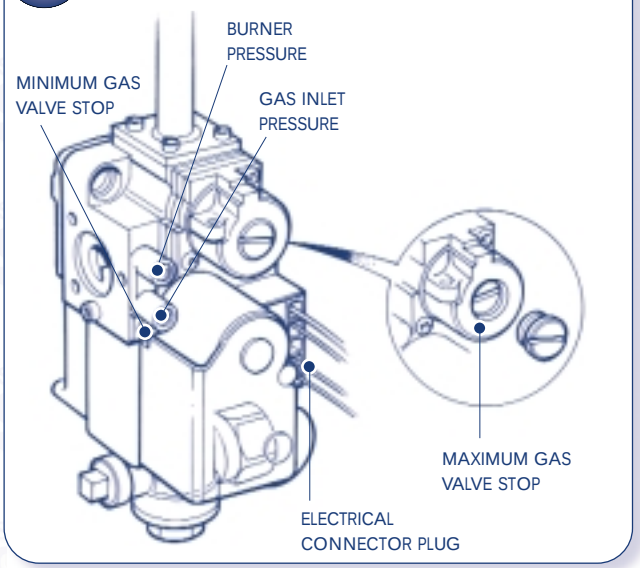

35a PCB SECTION

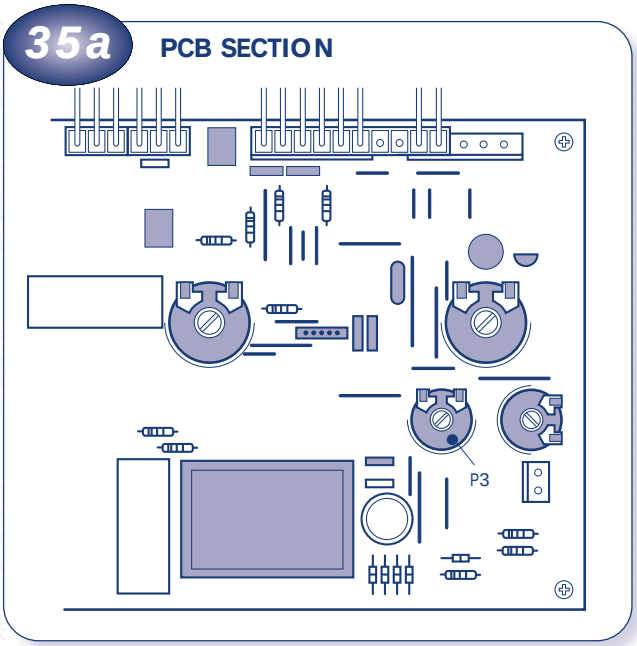

9.6.2 GAS CONTROL AND PCB BURNER PRESSURE SETTING PROCEDURE

a) Connect a suitable manometer to the gas inlet and burner pressure test points (see Fig. 35). Turn on the gas supply. Check for gas soundness taking the precautions described in section 5 and re-commission the appliance in accordance with section 5.3. In addition, it will be necessary to set the heat inputs for hot water.

b) Set the clock to the ON position (I) and ensure any external controls are calling for heat.

c) Set the Main Switch to the Heating & Water position and the temperature control knobs to high.

d) Remove PCB cover.

e) Minimum Hot Water Heat Input: Open a hot water tap fully and as soon the appliance has lit turn the potentiometer P3 (– CH set point) to its minimum (clockwise) position (Fig. 35a).

f) Set the minimum gas valve stop by adjusting the small screw on the gas valve (Fig. 35) until the burner pressure is set to 1.3 mbar.

g) Maximum Hot Water Heat Input: On the PCB, turn potentiometer P3 (max CH set point) to its maximum position (fully anti-clock).

h) Set the maximum gas valve stop by adjusting the large gas valve screw (behind the screw cap, Fig, 35) until the burner pressure is 9.7 mbar.

i) The maximum CH heat input may be set at any point between the minimum and maximum gas control setting (originally factory set at 6.3 mbar). This can be adjusted with the potentiometer P3.

j) Isolate the appliance and remove the link between pins 1 and 2 on terminal X4A. Switch the appliance back on at the mains isolation switch.

k) Check that the pressures are correctly set by turning on and off the DHW tap several times and on each occasion allowing the burner to ignite.

l) Reduce the DHW draw off rate progressivley and check that the burner pressure reduces in response to DHW temperature rise.

m) Close the DHW tap and ensure that the burner is extinguished and the pump stops (after a brief overrun period). Remove the pressure gauge, open the DHW tap to re-light the burner and test for gas soundness.

n) Close the DHW tap, re-seal the adjusted potentiometers, re-assemble the control panel and casing, then set all boiler

9.7 AIR PRESSURE SWITCH

a) Remove the casing front panel as described in section 9.1 step (a) and remove the sealed chamber front panel (4 screws).

b) Disconnect the pressure sensing pipes from the pressure switch (note that the short pipe (from the flue gas sampling point) is connected to the rear (-ve) connection on the pressure switch).

c) Unscrew the two screws securing the pressure switch, and transfer the electrical connections to the new switch.

d) Fit the new pressure switch and re-assemble in reverse order referring to the wiring diagrams (section 7) if necessary.

9.8 OVERHEAT THERMOSTAT

a) Remove the casing front panel and lower the controls fascia panel as described in section 9.6 step (a).

b) Unclip the thermostat phial from the pipe, and disconnect the two electrical connections (Fig. 36).

c) Unscrew the four screws (underneath) securing the appliance base plate and controls fascia panel. Carefully support the fascia panel and unscrew the nut securing the overheat thermostat.

d) Replace the thermostat and re-assemble in reverse order. Ensure that the phial is correctly clipped onto the pipe.

9.9 PCB

a) Remove the casing front panel and lower the control fascia panel as described in section 9.6.1 step (a).

b) Remove the PCB plastic cover (Fig. 32).

c) Remove carefully the control knob clips holding the control knob in position and pull out the three control knobs from the front of the fascia panel (Fig. 30).

d) Unclip the electrical connector plugs from the PCB (refer to section 7).

e) Remove the six self taping screws securing the PCB

f) Remove the PCB. Re-assembly is in reverse order

9.9.1 PCB CH HEAT INPUT SETTING PROCEDURE

a) On completion of replacing the PCB the CH maximum heat input will require setting.

b) Connect a suitable manometer to the gas inlet and burner pressure test points (see Fig. 35).

c) Set the clock to the ON position (I) and ensure any external controls are calling for heat.

d) Set the Main Switch to the Heating & Water position and turn the temperature control knobs to high.

e) Wait until appliance has lit (in CH mode only) and turn potentiometer P3 (max CH set point) to the required burner pressure between 9.7 and 1.3 mbar (originally factory set at 6.3mb)

9.10 CH/DHW MICROSWITCH

a) Remove the casing front panel and lower the controls fascia panel as described in section 9.6 step (a).

b) Release the appropriate micro switch assembly from the spindle by sliding out the retaining spring clip (Refer to figure 37).

c) Unscrew the three screws fixing the plastic housing halves together and slide the micro switch forwards to release it from the housing.

d) Transfer the electrical connections to the new micro switch, fit the new micro switch and re-assemble in reverse order.

36 OVERHEAT THERMOSTAT

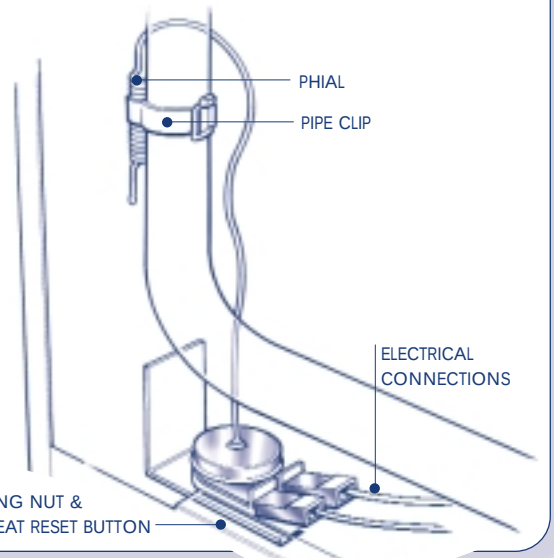

9.11 THERMISTORS - DHW OR HEATING

The thermistors are immersed in the waterways hence slight water loss is likely during this operation. Provision should be made to collect a small amount of water underneath the appliance.

a) Remove the casing front panel and lower the controls fascia panel as described in section 9.6 step (a).

b) Isolate the appliance from the system as follows:

If replacing DHW thermistor turn off the inlet water valve (see section 5) and open all DHW taps to empty the DHW circuit).

If replacing CH thermistor, turn off the boiler flow and return from the system using the isolation valves as shown in section 5.

c) Unclip and remove the electrical connector plug from the thermistor. Unscrew the thermistor from the waterway.

d) Replace the thermistor and re-assemble in reverse order. Ensure the copper washers are correctly fitted to provide a sealed joint. Re-commission the system as described in section 5.

37 WATER HOUSING GROUP SET

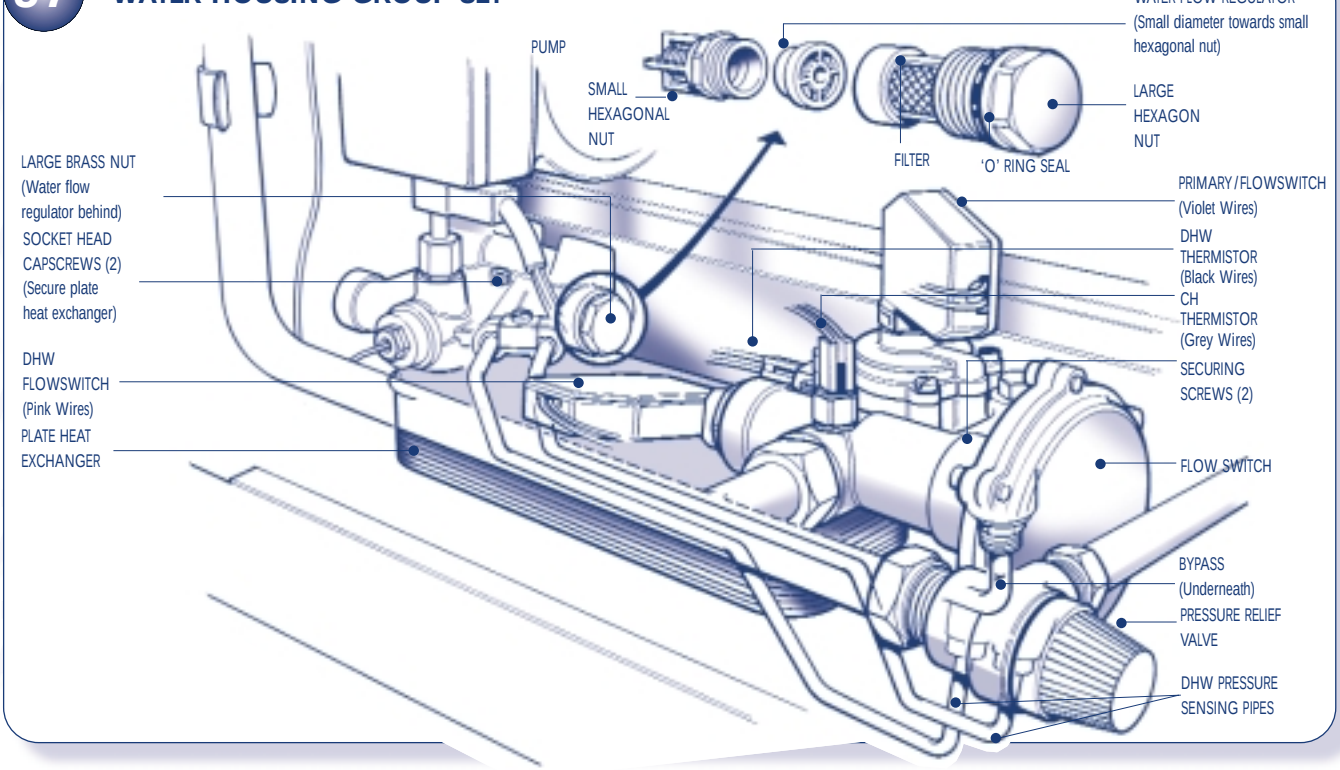

9.12 WATER FLOW REGULATOR

a) Remove the casing front panel and lower the controls fascia panel as described in section 9.6 step (a).
b) Isolate the cold water inlet valve (see section 5.1) and drain the DHW circuit by opening all DHW taps.
c) Make provision to collect any discharged water and unscrew and remove the large brass nut (Fig. 37) supporting the regulator assembly.
d) Unscrew the small nut at the opposite end of the assembly and carefully remove the plastic water regulator. Replace the water flow regulator. Ensure that the regulator is the correct way around (Fig. 37). The filter should be cleaned.
e) Carefully re-assemble in reverse order then re-commission the DHW circuit as described in section 5.

9.13 DHW HEAT EXCHANGER

a) Remove the casing front panel and lower the controls fascia panel as described in section 9.6 step (a).
b) Turn the CH flow and return valves to the closed position to isolate the boiler (see section 5.1), then drain the appliance.
c) Unscrew the pressure gauge, unplug the PCB connectors from the PCB, unscrew and remove the base plate and the controls fascia panel from the appliance after disconnecting one end of the restraining lead and the earth lead.
d) Isolate the cold water inlet valve and drain the DHW circuit by opening all DHW taps.
e) From underneath the appliance, remove the two spring clips securing the bypass pipe, and pull out the pipe. (Collect any discharged water).
f) Unscrew the two socket head cap screws supporting the heat exchanger (from above the heat exchanger - see Figure 37) and push the heat exchanger downwards to release it. (Collect any discharged water).
g) Replace the heat exchanger, then re-assemble in reverse order, ensure the 'O' ring seals are correctly positioned, and re-commission the heating and hot water systems as explained in section 5.
h) Check for leaks.

9.14 DHW FLOW SWITCH BODY

a) Remove the casing front panel and lower the controls fascia panel as described in section 9.6 step (a).
b) Remove the complete controls fascia panel and base plate as described in section 9.13.
c) Isolate the cold water inlet valve and drain the DHW circuit by opening all DHW taps.
d) Refer to Figure 38. Unscrew the two screws securing the switch body to the main brass block. Note the position of the alignment pin.
e) Remove the two spring clips, which secure the pressure sensing pipes into the switch body and pull out the pipes, taking care to collect any residual water.
f) Remove the switch body by sliding to the right.
g) Replace the flow switch and re-assemble in reverse order. Ensure that the alignment pin is correctly aligned. Re-commission the hot water system as explained in section 5.1.

9.15 PUMP

a) Remove the casing front panel and lower the controls fascia panel as described in section 9.6 step (a).
b) Turn the CH flow and return valves to the closed position to isolate the boiler (see section 5.1), then drain the appliance.
c) Remove the screw securing the electrical connections cover on the pump, and remove the electrical connections.
d) Either unscrew the two pump unions and remove the entire pump (using new sealing gaskets) OR unscrew the four socket head cap screws and remove the pump head only.
e) Replace the pump (or pump head), re-assemble in reverse order, and re-commission the system as explained in section 5.1.

9.16 PRESSURE RELIEF VALVE

a) Remove the casing front panel and lower the controls fascia panel as described in section 9.6 step (a).
b) Turn the CH flow and return valves to the closed position to isolate the boiler (see section 5.1), then drain the appliance.
c) Unscrew the union connections to the pressure relief valve, and remove the valve.
d) Replace the valve, re-assemble in reverse order, and re-commission the system as explained in section 5.1.

9.17 PRESSURE GAUGE

a) Remove the casing front panel and lower the controls fascia panel as described in section 9.6 step (a).
b) Turn the CH flow and return valves to the closed position to isolate the boiler (see section 5.1), then drain the appliance.
c) Unscrew the pressure gauge connection from the valve assembly, unclip the pressure gauge head out of the fascia panel, and remove the pressure gauge.
d) Replace the pressure gauge, re-assemble in reverse order, and re-commission the system as explained in section 5.1.

9.18 AUTO AIR VENT

a) Remove the casing front panel and sealed chamber front panel as described in section 9.1 steps (a) and (b).
b) Remove the combustion chamber front panel and burner locating bracket (7 screws). Take care not to damage the insulation.
c) Turn the CH flow and return valves to the closed position to isolate the boiler (see section 5.1), then drain the appliance.
d) Remove the plastic pipe from the top of the air vent, and unscrew the auto air vent using a suitable pipe wrench.
e) Fit replacement and re-assemble in reverse order.

9.19 SYSTEM EXPANSION VESSEL

In the unlikely event of failure of the expansion vessel diaphragm it is acceptable to leave the vessel in position and to fit a replacement vessel (of similar or greater capacity) external to the appliance but as close as possible to the CH return.

To replace the expansion vessel it is necessary to isolate the central heating and DHW systems from the appliance, drain the appliance and remove the appliance from the wall. The vessel can then be unscrewed and replaced.

9.20 TIME CLOCK

a) Remove the casing front panel and lower the controls fascia panel as described in section 9.6 step (a).

b) Unplug the four electrical connectors from the back of the clock.

c) Remove the clock from the panel by releasing four retaining screws, transfer the wires to the new timer (referring to the wiring diagrams in section 7 if necessary), and re-assemble in reverse order.

10 SHORT PARTS LIST

Key	G C Part No.	Description	No off	Makers Pt No.
1		BURNER (Natural gas)	1	700552
2		INJECTOR (Natural gas)	1	700536
3		IGNITION ELECTRODE	1	500611
4		DETECTION ELECTRODE	1	500612
5		GAS CONTROL	1	500616
6		PCB	1	500615
7		AIR PRESSURE SWITCH	1	500617
8		FAN ASSEMBLY	1	988355
9		OVERHEAT THERMOSTAT	1	550519
10		THERMISTOR	2	500590
11		MAIN HEAT EXCHANGER	1	450978
12		DHW HEAT EXCHANGER	1	450997
13		PRESSURE RELIEF VALVE	1	450987
14		AUTO AIR VENT	1	450908
15		PRESSURE GAUGE	1	450961
16		PUMP	1	851214
17		MICROSWITCH ASSEMBLY	2	500593
18		WATER FLOW REGULATOR	1	
19		FLOW SWITCH BODY	1	500594
20		EXPANSION VESSEL	1	450999
21		HEATING CLOCK	1	600520
22		ACE RETURN MANIFOLD	1	500554

11 SUPPLEMENT 1

Supplementary instructions for flue systems with a vertical outlet.

a) Read the installation requirements and flue specifications described in section 3.

b) Follow the installation procedure described in section 4 up to section 4.7 (but making the necessary hole(s) in the ceiling/roof instead of the wall). Use the following instructions in place of section 4.7.

c) Measure the vertical distance from the top of the boiler case to the roof line (Fig. 39). Use this length to calculate the number of extension ducts required.

d) Starting at the boiler, fit the vertical socket, standard duct and extensions required. Then fit the adaptors. Ensure that they are in line (level).

e) Now working from outside fit the balanced flue roof terminal, ensuring the roof flashing and sealing components are secured to the roof.

f) Ensure the inner and outer ducts are correctly fitted to the adaptor.

Note: All the joints should be secured using the self-tapping screws supplied.

38 SHORT PARTS LIST

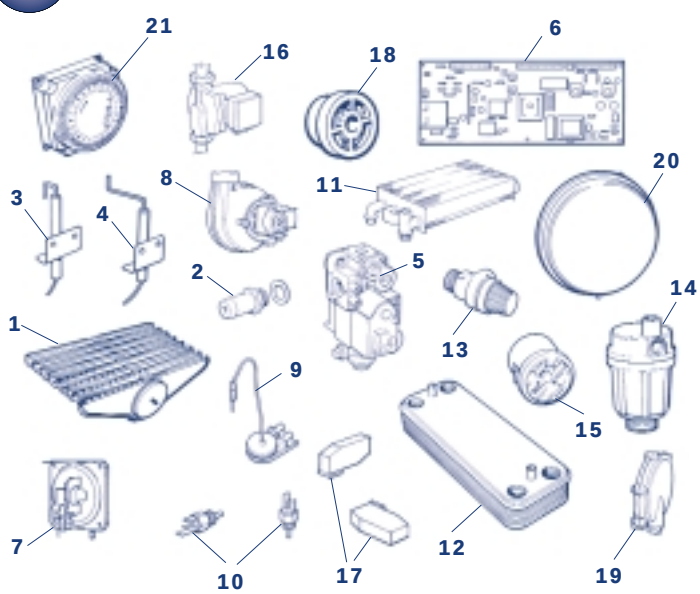

39 FLUE SYSTEM ASSEMBLY AND DIMENSIONS

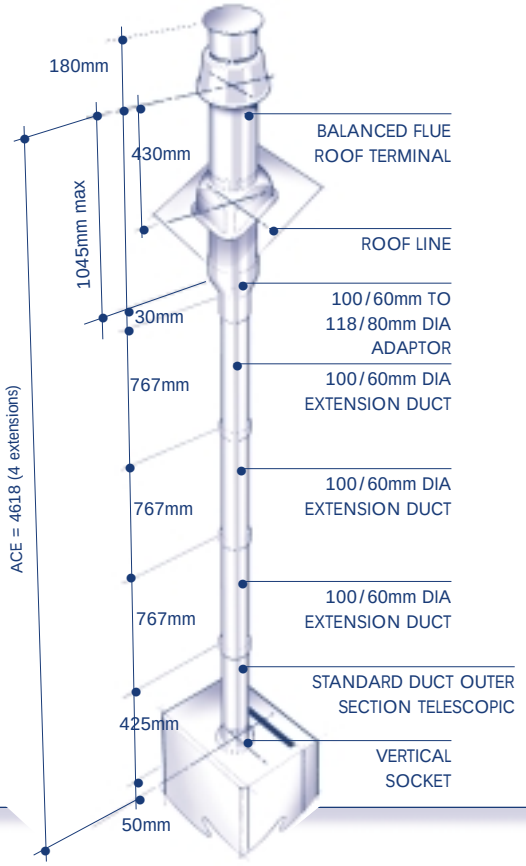

12 SUPPLEMENT 2

Supplementary instructions for flue systems incorporating an additional 90° elbow.

a) Read and follow the installation procedure described in the main section of the installation instructions up to section 4.2.

b) Using the template and the dimensional information given earlier in this booklet determine where the boiler and flue are to be positioned and make the necessary hole in the wall(s) for the air/flue duct as defined in section 4.2.

c) Install the boiler as described in section 4 with the exception of the flue system (4.7)

d) Using the information and dimensions in Figure 41 and earlier in this booklet calculate the lengths required for each duct.

e) Cut each duct to length, ensuring that each cut is square and free from burrs.

IMPORTANT NOTE: *All flue joints must be secured by two self-tapping screws through the air duct as illustrated.*

HALSTEAD

British Made Boilers

20/22 First Avenue, Bluebridge Industrial Estate, Halstead, Essex C09 2EX
Tel: (01787) 272800 Fax: (01787) 474588

SERVICE HELPLINE 024 7635 1424

Halstead Boilers are continuously improving their products and therefore reserve the right to change specifications without prior notice and accept no liability for any error or omission in the information contained in this document.

HB 8-00-750870

© HALSTEAD BOILERS LTD. 2000

benchmark™

The code of practice for the installation, commissioning & servicing of central heating systems